TEXAS INSTRUMENTS
LM2576, LM2576HV
SNVS107F – JUNE 1999 – REVISED MAY 2021

LM2576xx Series SIMPLE SWITCHER® 3-A Step-Down Voltage Regulator

1 Features

- Newer products available:
  - LMR33630 36-V, 3-A, 400-kHz synchronous converter
  - LM76003 60-V, 3.5-A, 2.2-MHz synchronous converter
- 3.3-V, 5-V, 12-V, 15-V, and adjustable output versions
- Adjustable version output voltage range,1.23 V to 37 V (57 V for HV version) ±4% maximum over line and load conditions
- Specified 3-A output current
- Wide input voltage range: 40 V Up to 60 V for HV version
- Requires only four external components
- 52-kHz fixed-frequency internal oscillator
- TTL-shutdown capability, low-power standby mode
- High efficiency
- Uses readily available standard inductors
- Create a custom design using the LMR33630 or LM76003 with the WEBENCH® Power Designer

2 Applications

- Motor drives
- Merchant network and server PSU
- Appliances
- Test and measurement equipment

3 Description

The LM2576 series of regulators are monolithic integrated circuits that provide all the active functions for a step-down (buck) switching regulator, capable of driving 3-A load with excellent line and load regulation. These devices are available in fixed output voltages of 3.3 V, 5 V, 12 V, 15 V, and an adjustable output version.

Requiring a minimum number of external components, these regulators are simple to use and include fault protection and a fixed-frequency oscillator.

The LM2576 series offers a high-efficiency replacement for popular three-terminal linear regulators. It substantially reduces the size of the heat sink, and in some cases no heat sink is required.

A standard series of inductors optimized for use with the LM2576 are available from several different manufacturers. This feature greatly simplifies the design of switch-mode power supplies.

Other features include a ±4% tolerance on output voltage within specified input voltages and output load conditions, and ±10% on the oscillator frequency. External shutdown is included, featuring 50-µA (typical) standby current. The output switch includes cycle-by-cycle current limiting, as well as thermal shutdown for full protection under fault conditions.

The new product, LMR33630, offers reduced BOM cost, higher efficiency, and an 85% reduction in solution size among many other features. The LM76003 requires very few external components and has a pinout designed for simple, optimum PCB layout for EMI and thermal performance. See the device comparison table to compare specs.

Device Information

PART NUMBER(1)	PACKAGE	BODY SIZE (NOM)
LM2576 LM2576HV	TO-220 (5)	10.16 mm × 8.51 mm
	DDPAK/TO-263 (5)	10.16 mm × 8.42 mm

(1) For all available packages, see the orderable addendum at the end of the data sheet.

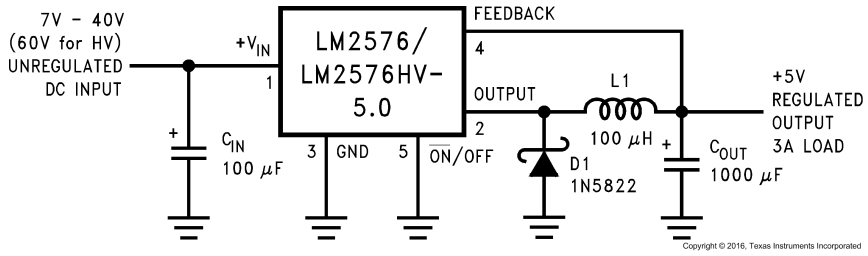

Fixed Output Voltage Version Typical Application Diagram

An IMPORTANT NOTICE at the end of this data sheet addresses availability, warranty, changes, use in safety-critical applications, intellectual property matters and other important disclaimers. PRODUCTION DATA.

Table of Contents

1 Features....1
2 Applications....1
3 Description....1
4 Revision History....2
5 Pin Configuration and Functions....3
6 Specifications....4
6.1 Absolute Maximum Ratings....4
6.2 ESD Ratings....4
6.3 Recommended Operating Conditions....4
6.4 Thermal Information....4
6.5 Electrical Characteristics: 3.3 V....5
6.6 Electrical Characteristics: 5 V....5
6.7 Electrical Characteristics: 12 V....5
6.8 Electrical Characteristics: 15 V....6
6.9 Electrical Characteristics: Adjustable Output Voltage....6
6.10 Electrical Characteristics: All Output Voltage Versions....6
6.11 Typical Characteristics....8
7 Detailed Description....12
7.1 Overview....12
7.2 Functional Block Diagram....12
7.3 Feature Description....12
7.4 Device Functional Modes....14
8 Application and Implementation....15
8.1 Application Information....15
8.2 Typical Applications....19
9 Power Supply Recommendations....25
10 Layout....26
10.1 Layout Guidelines....26
10.2 Layout Example....27
10.3 Grounding....27
10.4 Heat Sink and Thermal Considerations....27
11 Device and Documentation Support....29
11.1 Device Support....29
11.2 Documentation Support....30
11.3 Support Resources....30
11.4 Receiving Notification of Documentation Updates....30
11.5 Trademarks....30
11.6 Electrostatic Discharge Caution....30
11.7 Glossary....30
12 Mechanical, Packaging, and Orderable Information....30

4 Revision History

NOTE: Page numbers for previous revisions may differ from page numbers in the current version.

Changes from Revision E (June 2020) to Revision F (May 2021)	Page
• Added information for the LM76003 promotion	1
• Updated the numbering format for tables, figures, and cross-references throughout the document.	1

Changes from Revision D (January 2016) to Revision E (June 2020)	Page
• Added information about the LMR33630	1

Changes from Revision C (April 2013) to Revision D (January 2016)	Page
• Added *ESD Ratings* table, *Feature Description* section, *Device Functional Modes*, *Application and Implementation* section, *Power Supply Recommendations* section, *Layout* section, *Device and Documentation Support* section, and *Mechanical, Packaging, and Orderable Information* section	1
• Moved the thermal resistance data from the *Electrical Characteristics: All Output Voltage Versions* table to the *Thermal Information* table	4

Changes from Revision B (April 2013) to Revision C (April 2013)	Page
• Changed layout of National Data Sheet to TI format	3

Copyright © 2021 Texas Instruments Incorporated

5 Pin Configuration and Functions

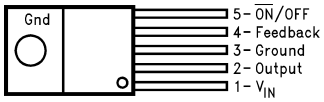

Figure 5-1. KC Package 5-Pin TO-220 Top View

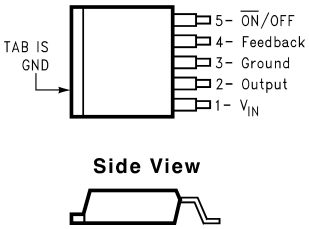

Figure 5-2. KTT Package 5-PIN DDPAK/TO-263 Top View

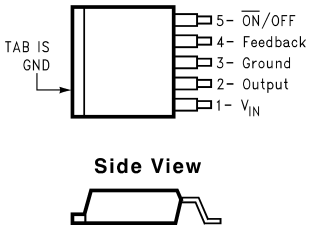

Figure 5-3. DDPAK/TO-263 (S) Package 5-Lead Surface-Mount Package Top View

Table 5-1. Pin Functions

PIN		I/O(1)	DESCRIPTION
NO.	NAME		
1	V_{IN}	I	Supply input pin to collector pin of high-side transistor. Connect to power supply and input bypass capacitors CIN. Path from V_{IN} pin to high frequency bypass C_{IN} and GND must be as short as possible.
2	OUTPUT	O	Emitter pin of the power transistor. This is a switching node. Attached this pin to an inductor and the cathode of the external diode.
3	GROUND	—	Ground pin. Path to C_{IN} must be as short as possible.
4	FEEDBACK	I	Feedback sense input pin. Connect to the midpoint of feedback divider to set VOUT for ADJ version or connect this pin directly to the output capacitor for a fixed output version.
5	$\overline{ON}$/OFF	I	Enable input to the voltage regulator. High = OFF and low = ON. Connect to GND to enable the voltage regulator. Do not leave this pin float.
—	TAB	—	Connected to GND. Attached to heatsink for thermal relief for TO-220 package or put a copper plane connected to this pin as a thermal relief for DDPAK package.

(1) I = INPUT, O = OUTPUT

Copyright © 2021 Texas Instruments Incorporated

6 Specifications

6.1 Absolute Maximum Ratings

over the recommended operating junction temperature range of -40°C to 125°C (unless otherwise noted)(1) (2)

		MIN	MAX	UNIT
Maximum supply voltage	LM2576		45	V
	LM2576HV		63	
$\overline{ON}$ /OFF pin input voltage		−0.3V ≤ V ≤ +V_{IN}		V
Output voltage to ground	(Steady-state)	−1		V
Power dissipation		Internally Limited		
Maximum junction temperature, T_J			150	°C
Storage temperature, T_{stg}		−65	150	°C

(1) Stresses beyond those listed under *Absolute Maximum Ratings* may cause permanent damage to the device. These are stress ratings only, which do not imply functional operation of the device at these or any other conditions beyond those indicated under *Recommended Operating Conditions*. Exposure to absolute-maximum-rated conditions for extended periods may affect device reliability.
(2) If Military/Aerospace specified devices are required, please contact the TI Sales Office/ Distributors for availability and specifications.

6.2 ESD Ratings

			VALUE	UNIT
$V_{(ESD)}$	Electrostatic discharge	Human-body model (HBM), per ANSI/ESDA/JEDEC JS-001(1)	±2000	V

(1) JEDEC document JEP155 states that 500-V HBM allows safe manufacturing with a standard ESD control process.

6.3 Recommended Operating Conditions

over the recommended operating junction temperature range of -40°C to 125°C (unless otherwise noted)

		MIN	MAX	UNIT
Temperature	LM2576, LM2576HV	−40	125	°C
Supply voltage	LM2576		40	V
	LM2576HV		60	

6.4 Thermal Information

THERMAL METRIC(1) (2) (3)		LM2576, LM2576HV		UNIT
		KTT (TO-263)	KC (TO-220)	
		5 PINS	5 PINS	
$R_{\theta JA}$	Junction-to-ambient thermal resistance	42.6	32.4	°C/W
$R_{\theta JC(top)}$	Junction-to-case (top) thermal resistance	43.3	41.2	°C/W
$R_{\theta JB}$	Junction-to-board thermal resistance	22.4	17.6	°C/W
ψ_{JT}	Junction-to-top characterization parameter	10.7	7.8	°C/W
ψ_{JB}	Junction-to-board characterization parameter	21.3	17	°C/W
$R_{\theta JC(bot)}$	Junction-to-case (bottom) thermal resistance	0.4	0.4	°C/W

(1) For more information about traditional and new thermal metrics, see the *Semiconductor and IC Package Thermal Metrics* application report, SPRA953 and the *Using New Thermal Metrics* applications report, SBVA025.
(2) The package thermal impedance is calculated in accordance with JESD 51-7
(3) Thermal Resistances were simulated on a 4-layer, JEDEC board.

Copyright © 2021 Texas Instruments Incorporated

6.5 Electrical Characteristics: 3.3 V

Specifications are for T_J = 25°C (unless otherwise noted).

PARAMETER		TEST CONDITIONS		MIN	TYP	MAX	UNIT
SYSTEM PARAMETERS TEST CIRCUIT Figure 8-3 **and** Figure 8-9(1)							
V_{OUT}	Output Voltage	V_{IN} = 12 V, I_{LOAD} = 0.5 A Circuit of Figure 8-3 and Figure 8-9		3.234	3.3	3.366	V
	Output Voltage: LM2576	6 V ≤ V_{IN} ≤ 40 V, 0.5 A ≤ I_{LOAD} ≤ 3 A Circuit of Figure 8-3 and Figure 8-9	T_J = 25°C	3.168	3.3	3.432	V
			Applies over full operating temperature range	3.135		3.465	
	Output Voltage: LM2576HV	6 V ≤ V_{IN} ≤ 60 V, 0.5 A ≤ I_{LOAD} ≤ 3 A Circuit of Figure 8-3 and Figure 8-9	T_J = 25°C	3.168	3.3	3.45	V
			Applies over full operating temperature range	3.135		3.482	
η	Efficiency	V_{IN} = 12 V, I_{LOAD} = 3 A			75%		

(1) External components such as the catch diode, inductor, input and output capacitors can affect switching regulator system performance. When the LM2576/LM2576HV is used as shown in Figure 8-3 and Figure 8-9, system performance is as shown in *Section 6.10*.

6.6 Electrical Characteristics: 5 V

Specifications are for T_J = 25°C for the Figure 8-3 and Figure 8-9 (unless otherwise noted).

PARAMETER		TEST CONDITIONS		MIN	TYP	MAX	UNIT
SYSTEM PARAMETERS TEST CIRCUIT Figure 8-3 **and** Figure 8-9(1)							
V_{OUT}	Output Voltage	V_{IN} = 12 V, I_{LOAD} = 0.5 A Circuit of Figure 8-3 and Figure 8-9		4.9	5	5.1	V
V_{OUT}	Output Voltage LM2576	0.5 A ≤ I_{LOAD} ≤ 3 A, 8 V ≤ V_{IN} ≤ 40 V Circuit of Figure 8-3 and Figure 8-9	T_J = 25°C	4.8	5	5.2	V
			Applies over full operating temperature range	4.75		5.25	
V_{OUT}	Output Voltage LM2576HV	0.5 A ≤ I_{LOAD} ≤ 3 A, 8 V ≤ V_{IN} ≤ 60 V Circuit of Figure 8-3 and Figure 8-9	T_J = 25°C	4.8	5	4.75	V
			Applies over full operating temperature range	5.225		5.275	
η	Efficiency	V_{IN} = 12 V, I_{LOAD} = 3 A			77%		

(1) External components such as the catch diode, inductor, input and output capacitors can affect switching regulator system performance. When the LM2576/LM2576HV is used as shown in Figure 8-3 and Figure 8-9, system performance is as shown in *Section 6.10*.

6.7 Electrical Characteristics: 12 V

Specifications are for T_J = 25°C (unless otherwise noted).

PARAMETER		TEST CONDITIONS		MIN	TYP	MAX	UNIT
SYSTEM PARAMETERS TEST CIRCUIT Figure 8-3 **and** Figure 8-9(1)							
V_{OUT}	Output Voltage	V_{IN} = 25 V, I_{LOAD} = 0.5 A Circuit of Figure 8-3 and Figure 8-9		11.76	12	12.24	V
V_{OUT}	Output Voltage LM2576	0.5 A ≤ I_{LOAD} ≤ 3 A, 15 V ≤ V_{IN} ≤ 40 V Circuit of Figure 8-3 and Figure 8-9 and	T_J = 25°C	11.52	12	12.48	V
			Applies over full operating temperature range	11.4		12.6	
V_{OUT}	Output Voltage LM2576HV	0.5 A ≤ I_{LOAD} ≤ 3 A, 15 V ≤ V_{IN} ≤ 60 V Circuit of Figure 8-3 and Figure 8-9	T_J = 25°C	11.52	12	12.54	V
			Applies over full operating temperature range	11.4		12.66	

Copyright © 2021 Texas Instruments Incorporated

Specifications are for T_J = 25°C (unless otherwise noted).

PARAMETER		TEST CONDITIONS	MIN	TYP	MAX	UNIT
η	Efficiency	V_{IN} = 15 V, I_{LOAD} = 3 A		88%		

(1) External components such as the catch diode, inductor, input and output capacitors can affect switching regulator system performance. When the LM2576/LM2576HV is used as shown in Figure 8-3 and Figure 8-9, system performance is as shown in *Section 6.10*.

6.8 Electrical Characteristics: 15 V

over operating free-air temperature range (unless otherwise noted).

PARAMETER		TEST CONDITIONS		MIN	TYP	MAX	UNIT
SYSTEM PARAMETERS TEST CIRCUIT Figure 8-3 **and** Figure 8-9(1)							
V_{OUT}	Output Voltage	V_{IN} = 25 V, I_{LOAD} = 0.5 A Circuit of Figure 8-3 and Figure 8-9		14.7	15	15.3	V
V_{OUT}	Output Voltage LM2576	0.5 A ≤ I_{LOAD} ≤ 3 A, 18 V ≤ V_{IN} ≤ 40 V Circuit of Figure 8-3 and Figure 8-9	T_J = 25°C	14.4	15	15.6	V
			Applies over full operating temperature range	14.25		15.75	
V_{OUT}	Output Voltage LM2576HV	0.5 A ≤ I_{LOAD} ≤ 3 A, 18 V ≤ V_{IN} ≤ 60 V Circuit of Figure 8-3 and Figure 8-9	T_J = 25°C	14.4	15	14.25	V
			Applies over full operating temperature range	15.68		15.83	
η	Efficiency	V_{IN} = 18 V, I_{LOAD} = 3 A			88%		

(1) External components such as the catch diode, inductor, input and output capacitors can affect switching regulator system performance. When the LM2576/LM2576HV is used as shown in Figure 8-3 and Figure 8-9, system performance is as shown in *Section 6.10*.

6.9 Electrical Characteristics: Adjustable Output Voltage

over operating free-air temperature range (unless otherwise noted).

PARAMETER		TEST CONDITIONS		MIN	TYP	MAX	UNIT
SYSTEM PARAMETERS TEST CIRCUIT Figure 8-3 **and** Figure 8-9(1)							
V_{OUT}	Feedback voltage	V_{IN} = 12 V, I_{LOAD} = 0.5 A V_{OUT} = 5 V, Circuit of Figure 8-3 and Figure 8-9		1.217	1.23	1.243	V
V_{OUT}	Feedback Voltage LM2576	0.5 A ≤ I_{LOAD} ≤ 3 A, 8 V ≤ V_{IN} ≤ 40 V V_{OUT} = 5 V, Circuit of Figure 8-3 and Figure 8-9	T_J = 25°C	1.193	1.23	1.267	V
			Applies over full operating temperature range	1.18		1.28	
V_{OUT}	Feedback Voltage LM2576HV	0.5 A ≤ I_{LOAD} ≤ 3 A, 8 V ≤ V_{IN} ≤ 60 V V_{OUT} = 5 V, Circuit of Figure 8-3 and Figure 8-9	T_J = 25°C	1.193	1.23	1.273	V
			Applies over full operating temperature range	1.18		1.286	
η	Efficiency	V_{IN} = 12 V, I_{LOAD} = 3 A, V_{OUT} = 5 V			77%		

(1) External components such as the catch diode, inductor, input and output capacitors can affect switching regulator system performance. When the LM2576/LM2576HV is used as shown in Figure 8-3 and Figure 8-9, system performance is as shown in *Section 6.10*.

6.10 Electrical Characteristics: All Output Voltage Versions

over operating free-air temperature range (unless otherwise noted)

PARAMETER		TEST CONDITIONS		MIN	TYP(1)	MAX	UNIT
SYSTEM PARAMETERS TEST CIRCUIT Figure 8-3 **and** Figure 8-9(2)							
I_b	Feedback Bias Current	V_{OUT} = 5 V (Adjustable Version Only)	T_J = 25°C	100	50		nA
			Applies over full operating temperature range	500			
f_O	Oscillator Frequency(7)	T_J = 25°C		47	52	58	kHz
		Applies over full operating temperature range		42		63	

Copyright © 2021 Texas Instruments Incorporated

over operating free-air temperature range (unless otherwise noted)

PARAMETER		TEST CONDITIONS		MIN	TYP(1)	MAX	UNIT
V_{SAT}	Saturation Voltage	I_{OUT} = 3 A (3)	T_J = 25°C		1.4	1.8	V
			Applies over full operating temperature range			2	
DC	Max Duty Cycle (ON)(4)			93%	98%		
I_{CL}	Current Limit(3) (7)	T_J = 25°C		4.2	5.8	6.9	A
		Applies over full operating temperature range		3.5		7.5	
I_L	Output Leakage Current	Output = 0 V Output = −1 V Output = −1 V (5) (6)		2	7.5	30	mA
I_Q	Quiescent Current(5)				5	10	mA
I_{STBY}	Standby Quiescent Current	$\overline{ON}$ /OFF Pin = 5 V (OFF)			50	200	µA
$\overline{ON}$ /OFF CONTROL TEST CIRCUIT Figure 8-3 **and** Figure 8-9							
V_{IH}	$\overline{ON}$ /OFF Pin Logic Input Level	V_{OUT} = 0 V	T_J = 25°C	2.2	1.4		V
			Applies over full operating temperature range	2.4			
V_{IL}		V_{OUT} = Nominal Output Voltage	T_J = 25°C		1.2	1	V
			Applies over full operating temperature range			0.8	
I_{IH}	$\overline{ON}$ /OFF Pin Input Current	$\overline{ON}$ /OFF Pin = 5 V (OFF)			12	30	µA
I_{IL}		$\overline{ON}$ /OFF Pin = 0 V (ON)			0	10	µA

(1) All limits specified at room temperature (25°C) unless otherwise noted. All room temperature limits are 100% production tested. All limits at temperature extremes are specified through correlation using standard Statistical Quality Control (SQC) methods.
(2) External components such as the catch diode, inductor, input and output capacitors can affect switching regulator system performance. When the LM2576/LM2576HV is used as shown in Figure 8-3 and Figure 8-9, system performance is as shown in *Section 6.10*.
(3) Output pin sourcing current. No diode, inductor or capacitor connected to output.
(4) Feedback pin removed from output and connected to 0V.
(5) Feedback pin removed from output and connected to +12 V for the Adjustable, 3.3-V, and 5-V versions, and +25 V for the 12-V and 15-V versions, to force the output transistor OFF.
(6) V_{IN} = 40 V (60 V for high voltage version).
(7) The oscillator frequency reduces to approximately 11 kHz in the event of an output short or an overload which causes the regulated output voltage to drop approximately 40% from the nominal output voltage. This self protection feature lowers the average power dissipation of the IC by lowering the minimum duty cycle from 5% down to approximately 2%.

Copyright © 2021 Texas Instruments Incorporated

6.11 Typical Characteristics

(Circuit of Figure 8-3 and Figure 8-9)

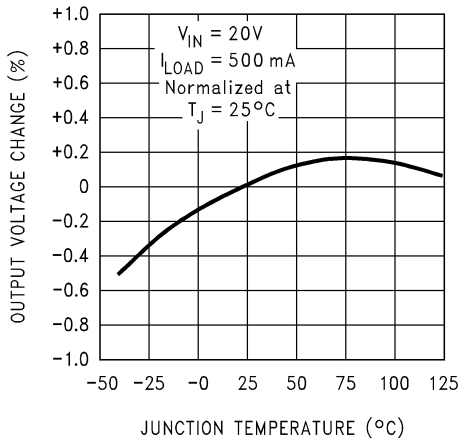

Figure 6-1. Normalized Output Voltage

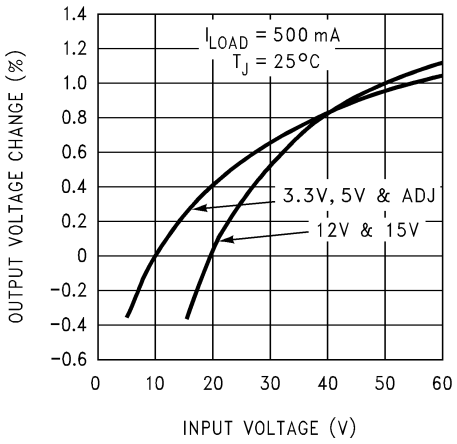

Figure 6-2. Line Regulation

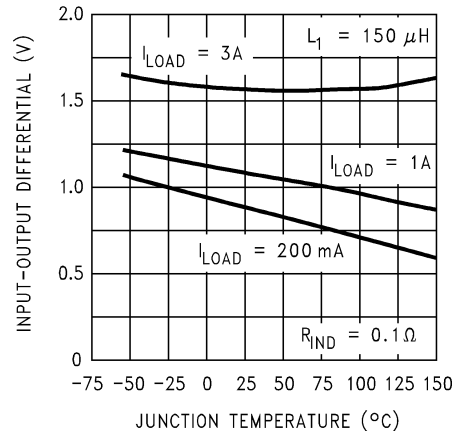

Figure 6-3. Dropout Voltage

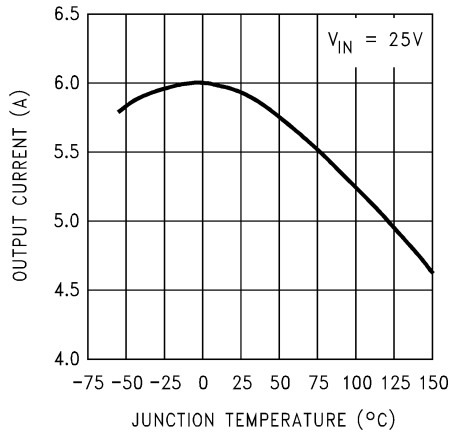

Figure 6-4. Current Limit

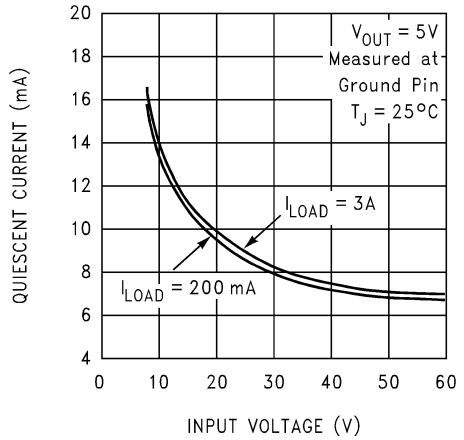

Figure 6-5. Quiescent Current

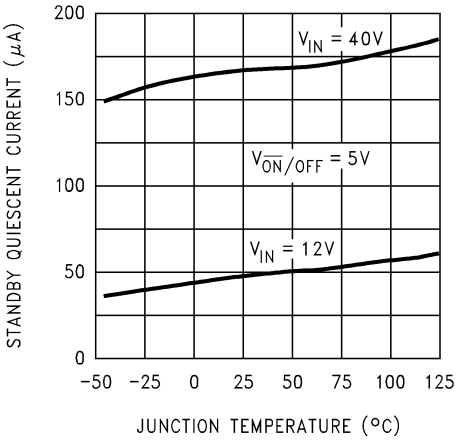

Figure 6-6. Standby Quiescent Current

Copyright © 2021 Texas Instruments Incorporated

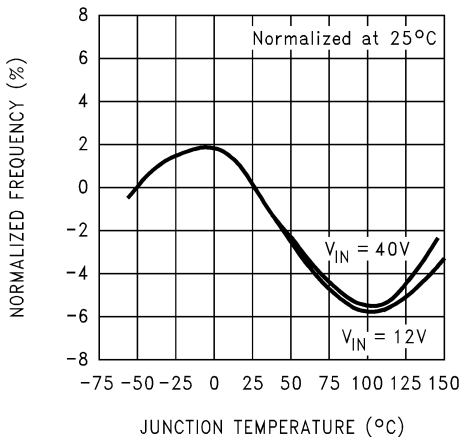

Figure 6-7. Oscillator Frequency

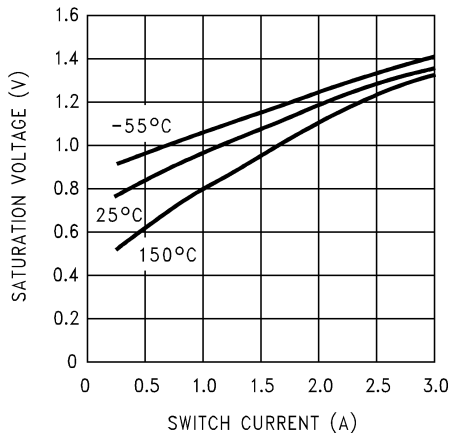

Figure 6-8. Switch Saturation Voltage

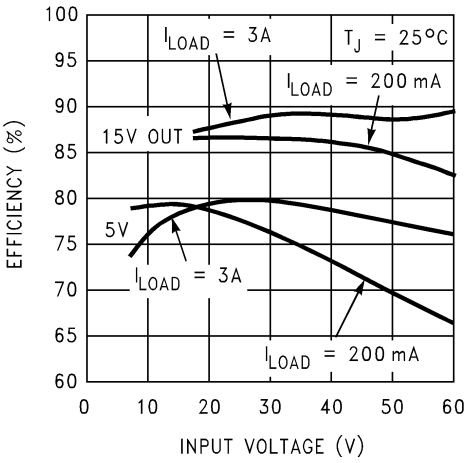

Figure 6-9. Efficiency

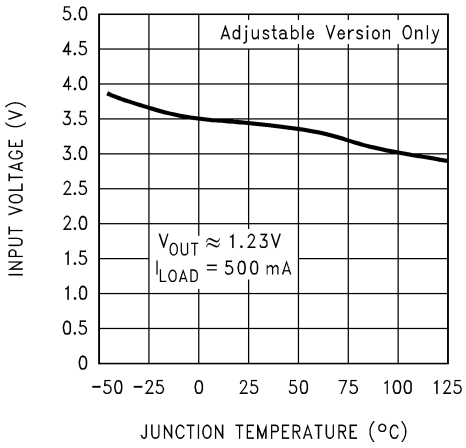

Figure 6-10. Minimum Operating Voltage

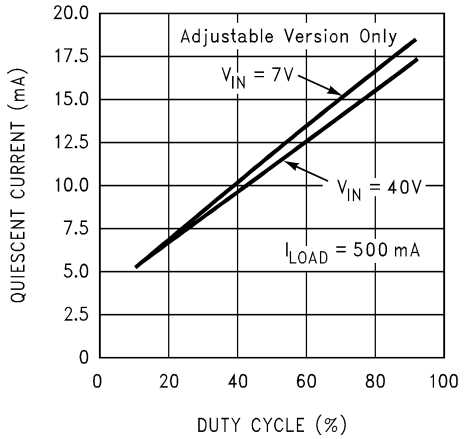

Figure 6-11. Quiescent Current vs Duty Cycle

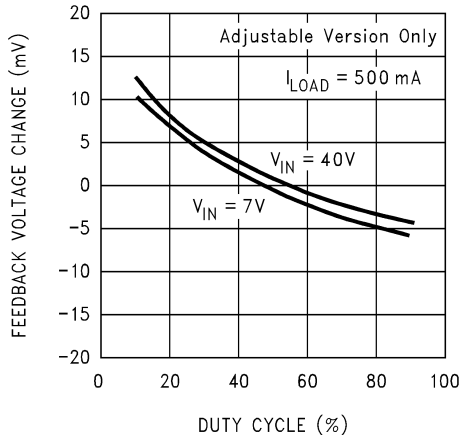

Figure 6-12. Feedback Voltage vs Duty Cycle

Copyright © 2021 Texas Instruments Incorporated

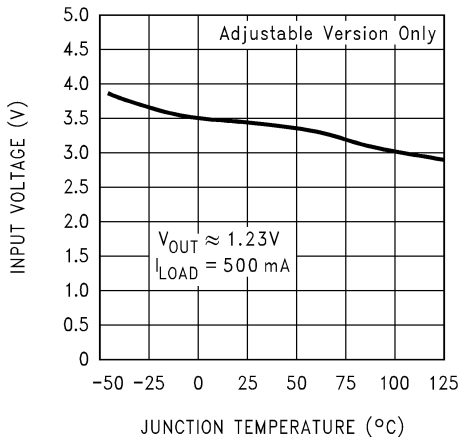

Figure 6-13. Minimum Operating Voltage

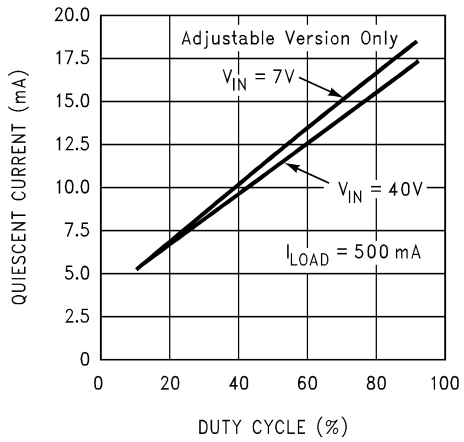

Figure 6-14. Quiescent Current vs Duty Cycle

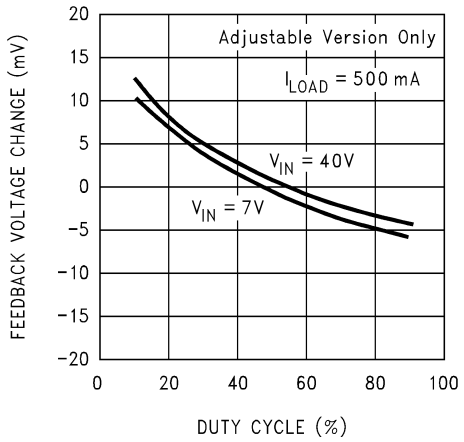

Figure 6-15. Feedback Voltage vs Duty Cycle

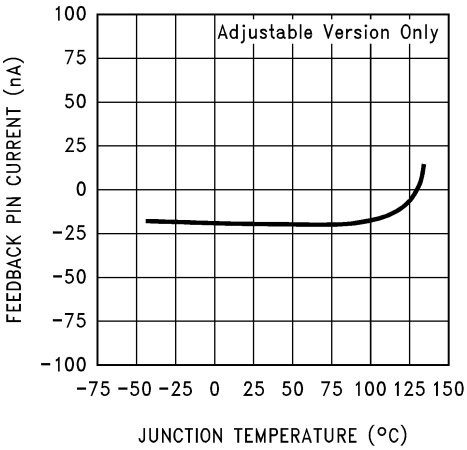

Figure 6-16. Feedback Pin Current

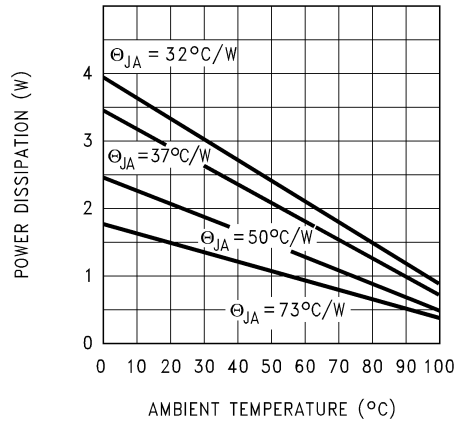

If the DDPAK/TO-263 package is used, the thermal resistance can be reduced by increasing the PCB copper area thermally connected to the package. Using 0.5 square inches of copper area, θ_{JA} is 50°C/W, with 1 square inch of copper area, θ_{JA} is 37°C/W, and with 1.6 or more square inches of copper area, θ_{JA} is 32°C/W.

Figure 6-17. Maximum Power Dissipation (DDPAK/ TO-263)

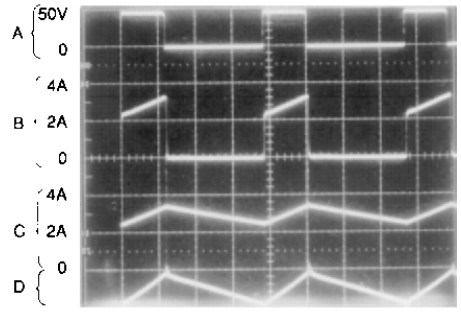

V_{OUT} = 15 V A: Output Pin Voltage, 50 V/div B: Output Pin Current, 2 A/div C: Inductor Current, 2 A/div D: Output Ripple Voltage, 50 mV/div, AC-Coupled**Horizontal Time Base: 5 µs/div**

Figure 6-18. Switching Waveforms

Copyright © 2021 Texas Instruments Incorporated

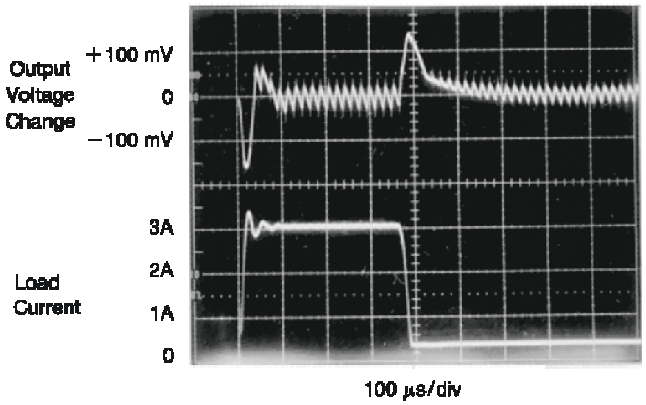

Figure 6-19. Load Transient Response

7 Detailed Description

7.1 Overview

The LM2576 SIMPLE SWITCHER® regulator is an easy-to-use, non-synchronous step-down DC-DC converter with a wide input voltage range from 40 V to up to 60 V for a HV version. It is capable of delivering up to 3-A DC load current with excellent line and load regulation. These devices are available in fixed output voltages of 3.3 V, 5 V, 12 V, 15 V, and an adjustable output version. The family requires few external components, and the pin arrangement was designed for simple, optimum PCB layout.

7.2 Functional Block Diagram

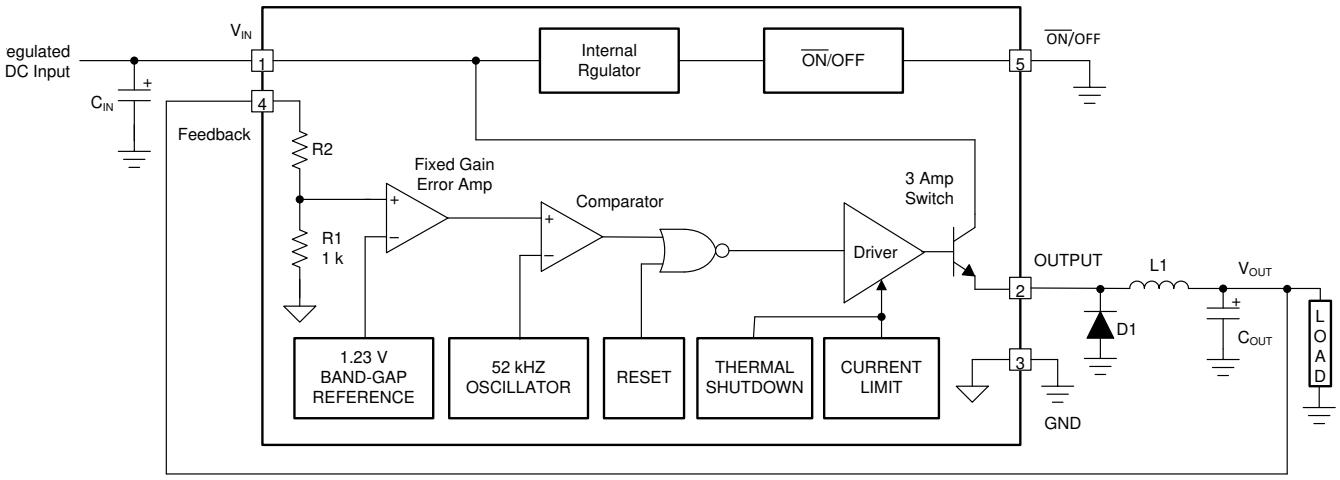

3.3 V R2 = 1.7 k 5 V, R2 = 3.1 k 12 V, R2 = 8.84 k 15 V, R2 = 11.3 k For ADJ. Version R1 = Open, R2 = 0 Ω Patent Pending

7.3 Feature Description

7.3.1 Undervoltage Lockout

In some applications it is desirable to keep the regulator off until the input voltage reaches a certain threshold. Figure 7-1 shows an undervoltage lockout circuit that accomplishes this task, while Figure 7-2 shows the same circuit applied to a buck-boost configuration. These circuits keep the regulator off until the input voltage reaches a predetermined level.

$$V_{TH} \approx V_{Z1} + 2V_{BE}(Q1) \quad (1)$$

Copyright © 2021 Texas Instruments Incorporated

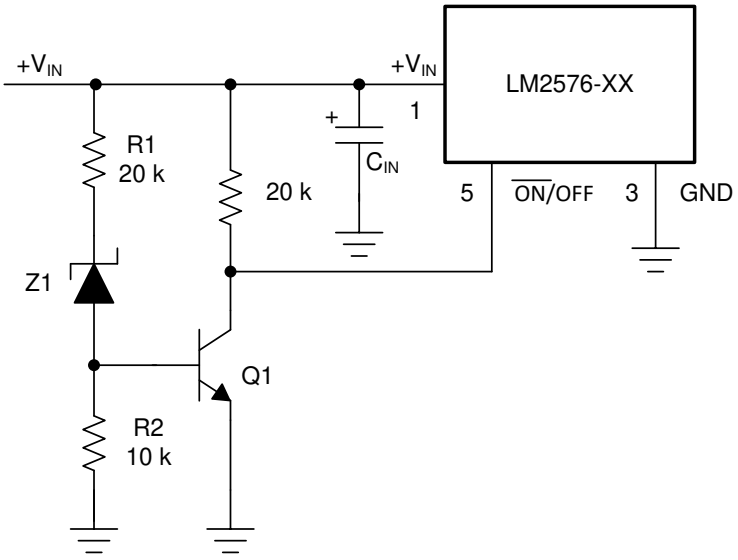

Complete circuit not shown.

Figure 7-1. Undervoltage Lockout for Buck Circuit

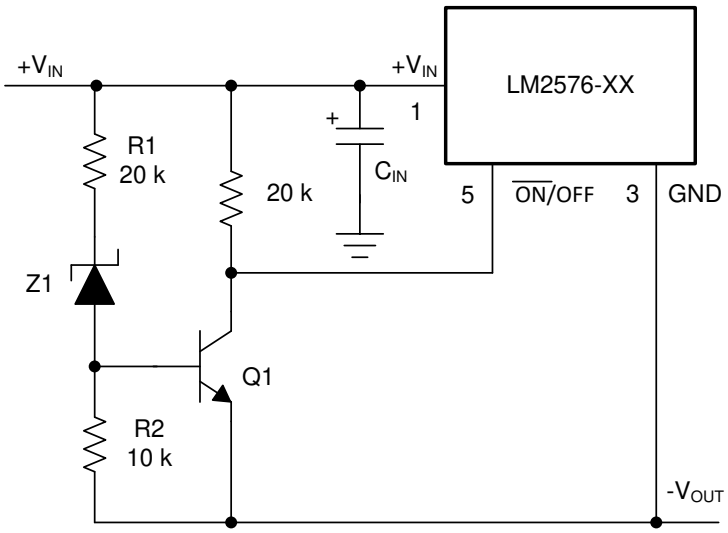

Complete circuit not shown (see Figure 8-1).

Figure 7-2. Undervoltage Lockout for Buck-Boost Circuit

7.3.2 Delayed Start-Up

The $\overline{ON}$ /OFF pin can be used to provide a delayed start-up feature as shown in Figure 7-3. With an input voltage of 20 V and for the part values shown, the circuit provides approximately 10 ms of delay time before the circuit begins switching. Increasing the RC time constant can provide longer delay times. But excessively large RC time constants can cause problems with input voltages that are high in 60-Hz or 120-Hz ripple, by coupling the ripple into the $\overline{ON}$ /OFF pin.

7.3.3 Adjustable Output, Low-Ripple Power Supply

Figure 7-4 shows a 3-A power supply that features an adjustable output voltage. An additional LC filter that reduces the output ripple by a factor of 10 or more is included in this circuit.

Copyright © 2021 Texas Instruments Incorporated

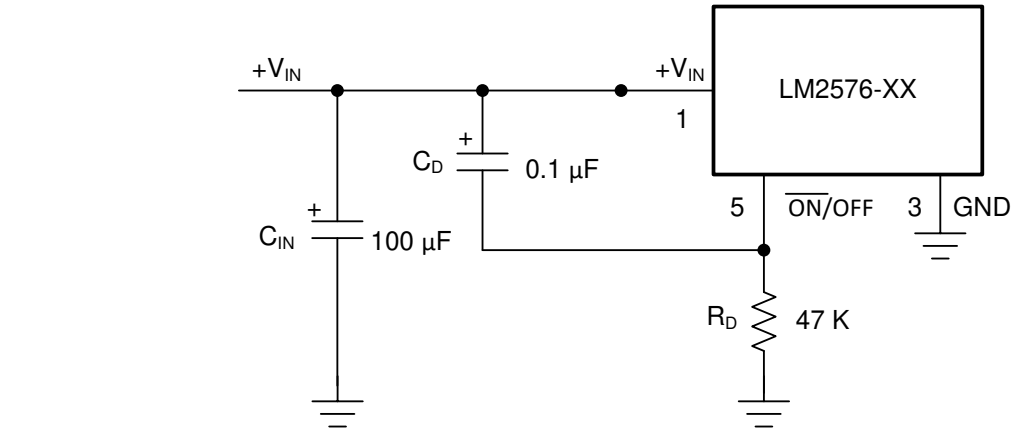

Complete circuit not shown.

Figure 7-3. Delayed Start-Up

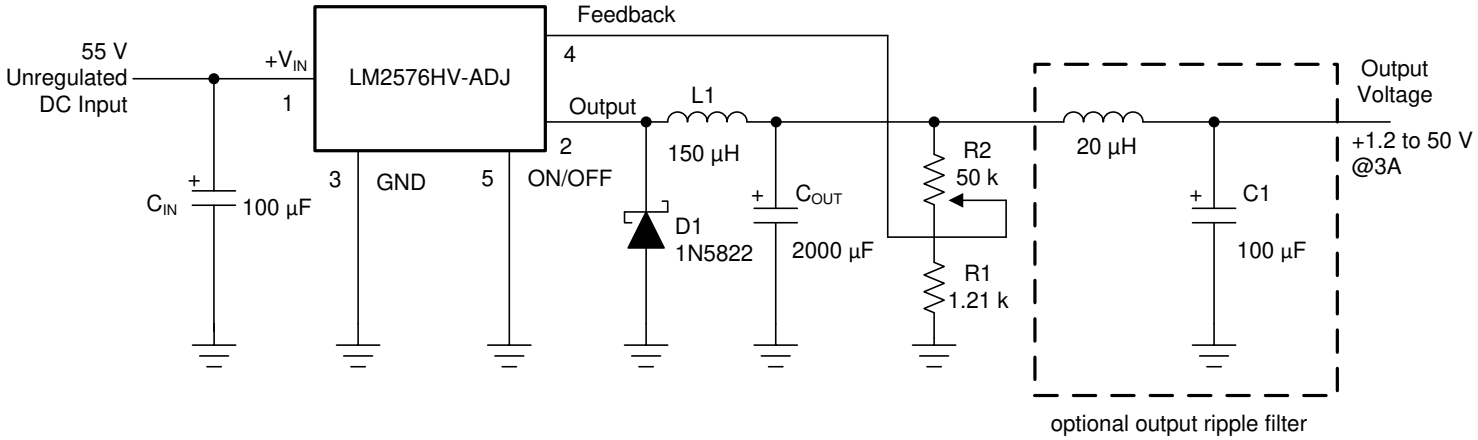

Figure 7-4. 1.2-V to 55-V Adjustable 3-A Power Supply With Low Output Ripple

7.4 Device Functional Modes

7.4.1 Shutdown Mode

The $\overline{ON}$/OFF pin provides electrical ON and OFF control for the LM2576. When the voltage of this pin is higher than 1.4 V, the device is in shutdown mode. The typical standby current in this mode is 50 µA.

7.4.2 Active Mode

When the voltage of the $\overline{ON}$/OFF pin is below 1.2 V, the device starts switching, and the output voltage rises until it reaches the normal regulation voltage.

7.4.3 Current Limit

The LM2576 device has current limiting to prevent the switch current from exceeding safe values during an accidental overload on the output. This current limit value can be found in *Section 6.10* under the heading of I_{CL}.

The LM2576 uses cycle-by-cycle peak current limit for overload protection. This helps to prevent damage to the device and external components. The regulator operates in current limit mode whenever the inductor current exceeds the value of I_{CL} given in *Section 6.10*. This occurs if the load current is greater than 3 A, or the converter is starting up. Keep in mind that the maximum available load current depends on the input voltage, output voltage, and inductor value. The regulator also incorporates short-circuit protection to prevent inductor current run-away. When the voltage on the FB pin (ADJ) falls below about 0.58 V the switching frequency is dropped to about 11 kHz. This allows the inductor current to ramp down sufficiently during the switch OFF-time to prevent saturation.

Copyright © 2021 Texas Instruments Incorporated

8 Application and Implementation

Note

Information in the following applications sections is not part of the TI component specification, and TI does not warrant its accuracy or completeness. TI's customers are responsible for determining suitability of components for their purposes, as well as validating and testing their design implementation to confirm system functionality.

8.1 Application Information

8.1.1 Input Capacitor (C_{IN})

To maintain stability, the regulator input pin must be bypassed with at least a 100-µF electrolytic capacitor. The capacitor's leads must be kept short, and placed near the regulator.

If the operating temperature range includes temperatures below −25°C, the input capacitor value may need to be larger. With most electrolytic capacitors, the capacitance value decreases and the ESR increases with lower temperatures and age. Paralleling a ceramic or solid tantalum capacitor increases the regulator stability at cold temperatures. For maximum capacitor operating lifetime, the RMS ripple current rating of the capacitor must be greater than:

$$1.2 \times \left(\frac{t_{ON}}{T}\right) \times I_{LOAD}$$

where $\frac{t_{ON}}{T} = \frac{V_{OUT}}{V_{IN}}$ for a buck regulator

and $\frac{t_{ON}}{T} = \frac{|V_{OUT}|}{|V_{OUT}| + V_{IN}}$ for a buck-boost regulator. (2)

8.1.2 Inductor Selection

All switching regulators have two basic modes of operation: continuous and discontinuous. The difference between the two types relates to the inductor current, whether it is flowing continuously, or if it drops to zero for a period of time in the normal switching cycle. Each mode has distinctively different operating characteristics, which can affect the regulator performance and requirements.

The LM2576 (or any of the SIMPLE SWITCHER® family can be used for both continuous and discontinuous modes of operation.

The inductor value selection guides in Figure 8-4 through Figure 8-8 are designed for buck regulator designs of the continuous inductor current type. When using inductor values shown in the inductor selection guide, the peak-to-peak inductor ripple current is approximately 20% to 30% of the maximum DC current. With relatively heavy load currents, the circuit operates in the continuous mode (inductor current always flowing), but under light load conditions, the circuit is forced to the discontinuous mode (inductor current falls to zero for a period of time). This discontinuous mode of operation is perfectly acceptable. For light loads (less than approximately 300 mA), it may be desirable to operate the regulator in the discontinuous mode, primarily because of the lower inductor values required for the discontinuous mode.

The selection guide chooses inductor values suitable for continuous mode operation, but if the inductor value chosen is prohibitively high, the designer should investigate the possibility of discontinuous operation.

Inductors are available in different styles such as pot core, toriod, E-frame, bobbin core, and so on, as well as different core materials, such as ferrites and powdered iron. The bobbin core is the least expensive type, and consists of wire wrapped on a ferrite rod core. This type of construction makes for an inexpensive inductor; however, because the magnetic flux is not completely contained within the core, the bobbin core generates more electromagnetic interference (EMI). This EMI can cause problems in sensitive circuits, or can give incorrect scope readings because of induced voltages in the scope probe.

The inductors listed in the selection chart include ferrite pot core construction for AIE, powdered iron toroid for Pulse Engineering, and ferrite bobbin core for Renco.

Copyright © 2021 Texas Instruments Incorporated

An inductor must not operate beyond its maximum-rated current because it may saturate. When an inductor begins to saturate, the inductance decreases rapidly, and the inductor begins to look mainly resistive (the DC resistance of the winding), causing the switch current to rise very rapidly. Different inductor types have different saturation characteristics, and this must be considered when selecting an inductor.

The inductor manufacturer's data sheets include current and energy limits to avoid inductor saturation.

8.1.3 Inductor Ripple Current

When the switcher is operating in the continuous mode, the inductor current waveform ranges from a triangular to a sawtooth type of waveform (depending on the input voltage). For a given input voltage and output voltage, the peak-to-peak amplitude of this inductor current waveform remains constant. As the load current rises or falls, the entire sawtooth current waveform also rises or falls. The average DC value of this waveform is equal to the DC load current (in the buck regulator configuration).

If the load current drops to a low enough level, the bottom of the sawtooth current waveform reaches zero, and the switcher changes to a discontinuous mode of operation. This is a perfectly acceptable mode of operation. Any buck switching regulator (no matter how large the inductor value is) is forced to run discontinuous if the load current is light enough.

8.1.4 Output Capacitor

An output capacitor is required to filter the output voltage and is needed for loop stability. The capacitor must be placed near the LM2576 using short PCB traces. Standard aluminum electrolytics are usually adequate, but TI recommends low ESR types for low output ripple voltage and good stability. The ESR of a capacitor depends on many factors, including: the value, the voltage rating, physical size, and the type of construction. In general, low value or low voltage (less than 12 V) electrolytic capacitors usually have higher ESR numbers.

The amount of output ripple voltage is primarily a function of the ESR (Equivalent Series Resistance) of the output capacitor and the amplitude of the inductor ripple current (ΔI_{IND}). See *Section 8.1.3*.

The lower capacitor values (220 µF to 1000 µF) allows typically 50 mV to 150 mV of output ripple voltage, while larger-value capacitors reduces the ripple to approximately 20 mV to 50 mV.

$$\text{Output Ripple Voltage} = (\Delta I_{IND})\ (\text{ESR of } C_{OUT}) \tag{3}$$

To further reduce the output ripple voltage, several standard electrolytic capacitors may be paralleled, or a higher-grade capacitor may be used. Such capacitors are often called *high-frequency*, *low-inductance*, or *low-ESR*. These reduces the output ripple to 10 mV or 20 mV. However, when operating in the continuous mode, reducing the ESR below 0.03 Ω can cause instability in the regulator.

Tantalum capacitors can have a very low ESR, and must be carefully evaluated if it is the only output capacitor. Because of their good low temperature characteristics, a tantalum can be used in parallel with aluminum electrolytics, with the tantalum making up 10% or 20% of the total capacitance.

The ripple current rating of the capacitor at 52 kHz should be at least 50% higher than the peak-to-peak inductor ripple current.

8.1.5 Catch Diode

Buck regulators require a diode to provide a return path for the inductor current when the switch is off. This diode must be placed close to the LM2576 using short leads and short printed-circuit traces.

Because of their fast switching speed and low forward voltage drop, Schottky diodes provide the best efficiency, especially in low output voltage switching regulators (less than 5 V). Fast-recovery, high-efficiency, or ultra-fast recovery diodes are also suitable, but some types with an abrupt turnoff characteristic may cause instability and EMI problems. A fast-recovery diode with soft recovery characteristics is a better choice. Standard 60-Hz diodes (for example, 1N4001 or 1N5400, and so on) are also *not suitable*. See Table 8-3 for Schottky and *soft* fast-recovery diode selection guide.

Copyright © 2021 Texas Instruments Incorporated

8.1.6 Output Voltage Ripple and Transients

The output voltage of a switching power supply contains a sawtooth ripple voltage at the switcher frequency, typically about 1% of the output voltage, and may also contain short voltage spikes at the peaks of the sawtooth waveform.

The output ripple voltage is due mainly to the inductor sawtooth ripple current multiplied by the ESR of the output capacitor (see *Section 8.1.2*).

The voltage spikes are present because of the fast switching action of the output switch, and the parasitic inductance of the output filter capacitor. To minimize these voltage spikes, special low inductance capacitors can be used, and their lead lengths must be kept short. Wiring inductance, stray capacitance, as well as the scope probe used to evaluate these transients, all contribute to the amplitude of these spikes.

An additional small LC filter (20 µH and 100 µF) can be added to the output (as shown in Figure 7-4) to further reduce the amount of output ripple and transients. A 10 × reduction in output ripple voltage and transients is possible with this filter.

8.1.7 Feedback Connection

The LM2576 (fixed voltage versions) feedback pin must be wired to the output voltage point of the switching power supply. When using the adjustable version, physically locate both output voltage programming resistors near the LM2576 to avoid picking up unwanted noise. Avoid using resistors greater than 100 kΩ because of the increased chance of noise pickup.

8.1.8 $\overline{\text{ON}}$ /OFF INPUT

For normal operation, the $\overline{\text{ON}}$ /OFF pin must be grounded or driven with a low-level TTL voltage (typically below 1.6 V). To put the regulator into standby mode, drive this pin with a high-level TTL or CMOS signal. The $\overline{\text{ON}}$ /OFF pin can be safely pulled up to $+V_{IN}$ without a resistor in series with it. The $\overline{\text{ON}}$ /OFF pin must not be left open.

8.1.9 Inverting Regulator

Figure 8-1 shows a LM2576-12 in a buck-boost configuration to generate a negative 12-V output from a positive input voltage. This circuit bootstraps the ground pin of the regulator to the negative output voltage, then by grounding the feedback pin, the regulator senses the inverted output voltage and regulates it to −12 V.

For an input voltage of 12 V or more, the maximum available output current in this configuration is approximately 700 mA. At lighter loads, the minimum input voltage required drops to approximately 4.7 V.

The switch currents in this buck-boost configuration are higher than in the standard buck-mode design, thus lowering the available output current. Also, the start-up input current of the buck-boost converter is higher than the standard buck-mode regulator, and this may overload an input power source with a current limit less than 5 A. Using a delayed turn-on or an undervoltage lockout circuit (described in *Section 8.1.10*) would allow the input voltage to rise to a high enough level before the switcher would be allowed to turn on.

Because of the structural differences between the buck and the buck-boost regulator topologies, the buck regulator design procedure section can not be used to select the inductor or the output capacitor. The recommended range of inductor values for the buck-boost design is between 68 µH and 220 µH, and the output capacitor values must be larger than what is normally required for buck designs. Low input voltages or high output currents require a large value output capacitor (in the thousands of micro Farads).

The peak inductor current, which is the same as the peak switch current, can be calculated in Equation 4:

$$I_p \approx \frac{I_{LOAD}\,(V_{IN} + |V_O|)}{V_{IN}} + \frac{V_{IN}\,|V_O|}{V_{IN} + |V_O|} \times \frac{1}{2L_1\,f_{osc}} \tag{4}$$

where

- f_{osc} = 52 kHz

Copyright © 2021 Texas Instruments Incorporated

Under normal continuous inductor current operating conditions, the minimum V_{IN} represents the worst case. Select an inductor that is rated for the peak current anticipated.

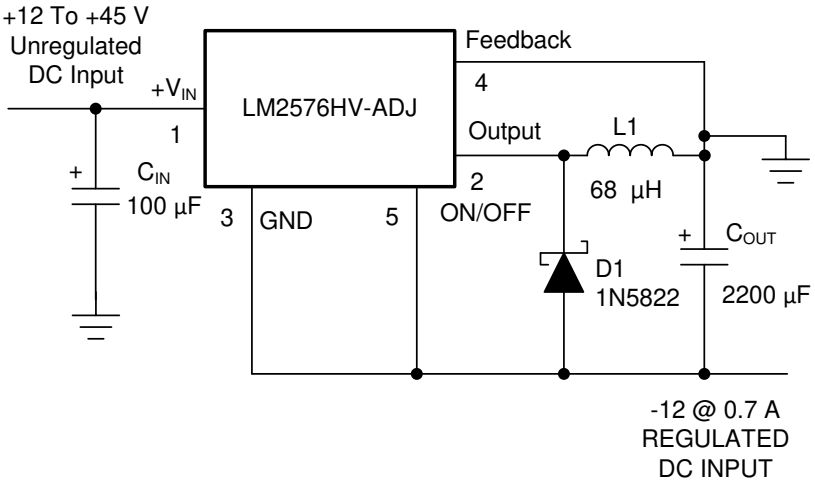

Figure 8-1. Inverting Buck-Boost Develops −12 V

Also, the maximum voltage appearing across the regulator is the absolute sum of the input and output voltage. For a −12-V output, the maximum input voltage for the LM2576 is +28 V, or +48 V for the LM2576HV.

8.1.10 Negative Boost Regulator

Another variation on the buck-boost topology is the negative boost configuration. The circuit in Figure 8-2 accepts an input voltage ranging from −5 V to −12 V and provides a regulated −12-V output. Input voltages greater than −12 V causes the output to rise above −12 V, but does not damage the regulator.

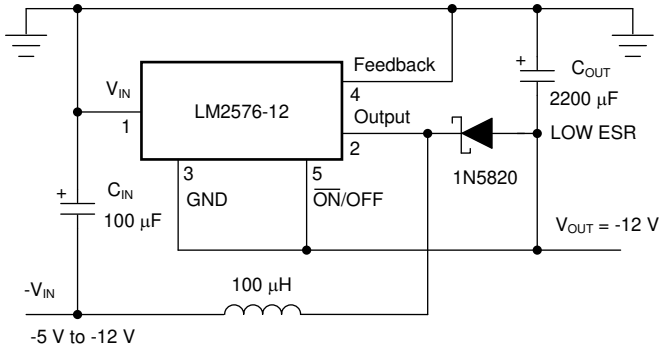

Typical Load Current 400 mA for V_{IN} = −5.2 V 750 mA for V_{IN} = −7 V Heat sink may be required.

Figure 8-2. Negative Boost

Because of the boosting function of this type of regulator, the switch current is relatively high, especially at low input voltages. Output load current limitations are a result of the maximum current rating of the switch. Also, boost regulators can not provide current-limiting load protection in the event of a shorted load, so some other means (such as a fuse) may be necessary.

Copyright © 2021 Texas Instruments Incorporated

8.2 Typical Applications

8.2.1 Fixed Output Voltage Version

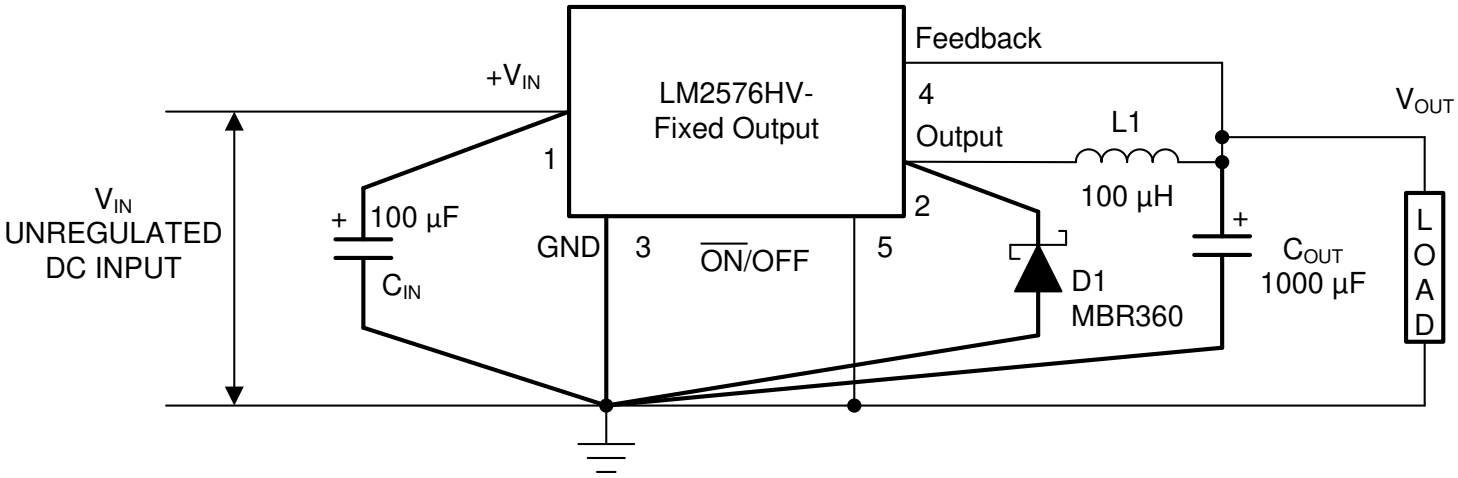

C_{IN} — 100-µF, 75-V, Aluminum Electrolytic C_{OUT} — 1000-µF, 25-V, Aluminum Electrolytic D_1 — Schottky, MBR360 L_1 — 100 µH, Pulse Eng. PE-92108 R_1 — 2 k, 0.1% R_2 — 6.12 k, 0.1%

Figure 8-3. Fixed Output Voltage Versions

8.2.1.1 Design Requirements

Table 8-1 lists the design parameters of this example.

Table 8-1. Design Parameters

DESIGN PARAMETER	EXAMPLE VALUE
Regulated Output Voltage (3.3 V, 5 V, 12 V, or 15 V), V_{OUT}	5 V
Maximum Input Voltage, V_{IN}(Max)	15 V
Maximum Load Current, I_{LOAD}(Max)	3 A

8.2.1.2 Detailed Design Procedure

8.2.1.2.1 Custom Design with WEBENCH Tools

Click here to create a custom design using the WEBENCH® Power Designer.

1. Start by entering your V_{IN}, V_{OUT} and I_{OUT} requirements.
2. Optimize your design for key parameters like efficiency, footprint and cost using the optimizer dial and compare this design with other possible solutions from Texas Instruments.
3. WEBENCH Power Designer provides you with a customized schematic along with a list of materials with real time pricing and component availability.
4. In most cases, you will also be able to:
   - Run electrical simulations to see important waveforms and circuit performance,
   - Run thermal simulations to understand the thermal performance of your board,
   - Export your customized schematic and layout into popular CAD formats,
   - Print PDF reports for the design, and share your design with colleagues.

8.2.1.2.2 Inductor Selection (L1)

1. Select the correct Inductor value selection guide from Figure 8-4, Figure 8-5, Figure 8-6, or Figure 8-7. (Output voltages of 3.3 V, 5 V, 12 V or 15 V respectively). For other output voltages, see the design procedure for the adjustable version. Use the selection guide shown in Figure 8-5.

Copyright © 2021 Texas Instruments Incorporated

2. From the inductor value selection guide, identify the inductance region intersected by V_{IN}(Max) and I_{LOAD}(Max), and note the inductor code for that region. From the selection guide, the inductance area intersected by the 15-V line and 3-A line is L100.
3. Identify the inductor value from the inductor code, and select an appropriate inductor from the table shown in Figure 8-4. Part numbers are listed for three inductor manufacturers. The inductor chosen must be rated for operation at the LM2576 switching frequency (52 kHz) and for a current rating of 1.15 × I_{LOAD}. For additional inductor information, see *Section 8.1.2*. Inductor value required is 100 µH from the table in Figure 8-4. Choose AIE 415-0930, Pulse Engineering PE92108, or Renco RL2444.

8.2.1.2.3 Output Capacitor Selection (C_{OUT})

1. The value of the output capacitor together with the inductor defines the dominate pole-pair of the switching regulator loop. For stable operation and an acceptable output ripple voltage, (approximately 1% of the output voltage) TI recommends a value between 100 µF and 470 µF. We choose C_{OUT} = 680-µF to 2000-µF standard aluminum electrolytic.
2. The voltage rating of the capacitor must be at least 1.5 times greater than the output voltage. For a 5-V regulator, a rating of at least 8 V is appropriate, and a 10-V or 15-V rating is recommended. Capacitor voltage rating = 20 V. Higher voltage electrolytic capacitors generally have lower ESR numbers, and for this reason it may be necessary to select a capacitor rated for a higher voltage than would normally be needed.

8.2.1.2.4 Catch Diode Selection (D1)

1. The catch-diode current rating must be at least 1.2 times greater than the maximum load current. Also, if the power supply design must withstand a continuous output short, the diode should have a current rating equal to the maximum current limit of the LM2576. The most stressful condition for this diode is an overload or shorted output condition. For this example, a 3-A current rating is adequate.
2. The reverse voltage rating of the diode should be at least 1.25 times the maximum input voltage. Use a 20-V 1N5823 or SR302 Schottky diode, or any of the suggested fast-recovery diodes shown in Table 8-3.

8.2.1.2.5 Input Capacitor (C_{IN})

An aluminum or tantalum electrolytic bypass capacitor located close to the regulator is needed for stable operation. A 100-µF, 25-V aluminum electrolytic capacitor located near the input and ground pins provides sufficient bypassing.

Copyright © 2021 Texas Instruments Incorporated

8.2.1.3 Application Curves

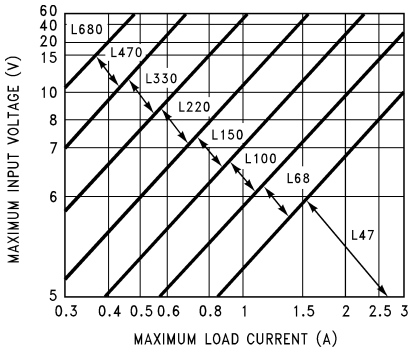

Figure 8-4. LM2576(HV)-3.3

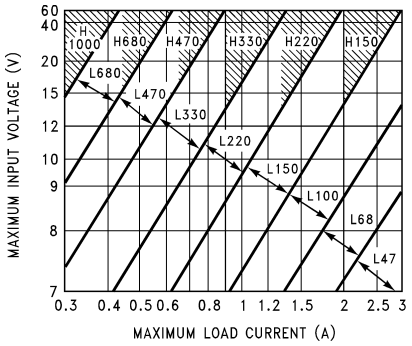

Figure 8-5. LM2576(HV)-5.0

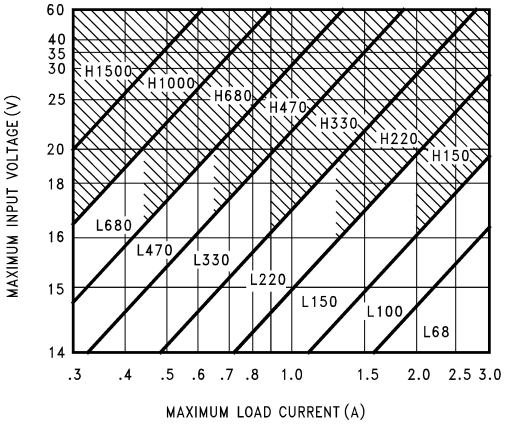

Figure 8-6. LM2576(HV)-12

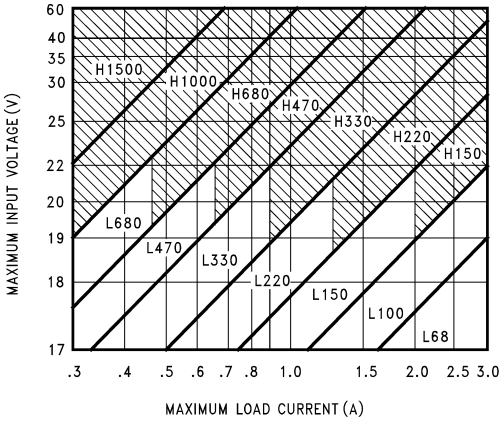

Figure 8-7. LM2576(HV)-15

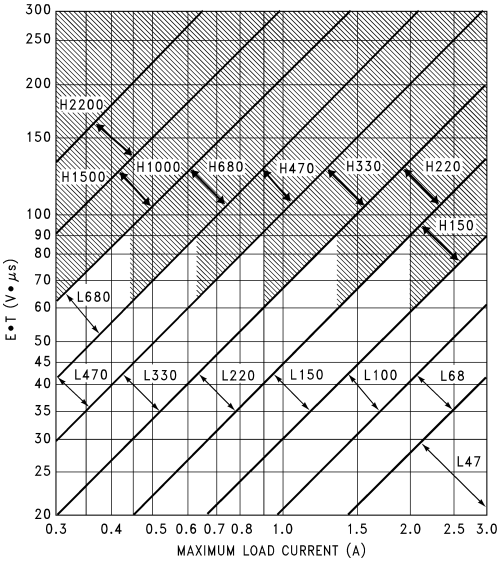

Figure 8-8. LM2576(HV)-ADJ

Copyright © 2021 Texas Instruments Incorporated

8.2.2 Adjusted Output Voltage Version

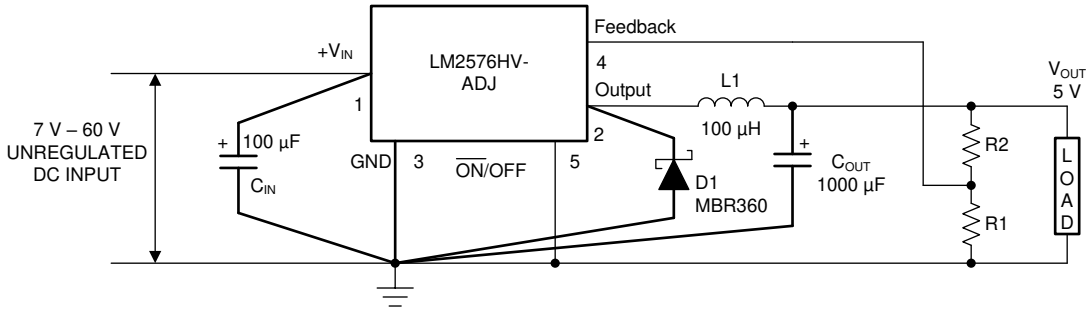

$$V_{OUT} = V_{REF}\left(1 + \frac{R_2}{R_1}\right)$$

$$R_2 = R_1\left(\frac{V_{OUT}}{V_{REF}} - 1\right)$$ where V_{REF} = 1.23 V, R1 between 1 k and 5 k

Figure 8-9. Adjustable Output Voltage Version

8.2.2.1 Design Requirements

Table 8-2 lists the design parameters of this example.

Table 8-2. Design Parameters

DESIGN PARAMETER	EXAMPLE VALUE
Regulated Output Voltage, V_{OUT}	10 V
Maximum Input Voltage, V_{IN}(Max)	25 V
Maximum Load Current, I_{LOAD}(Max)	3 A
Switching Frequency, F	Fixed at 52 kHz

8.2.2.2 Detailed Design Procedure

8.2.2.2.1 Programming Output Voltage

Select R1 and R2, as shown in Figure 8-9.

Use Equation 5 to select the appropriate resistor values.

$$V_{OUT} = V_{REF}\left(1 + \frac{R_2}{R_1}\right) \quad \text{where } V_{REF} = 1.23V \tag{5}$$

R_1 can be between 1k and 5k. *(For best temperature coefficient and stability with time, use 1% metal film resistors)*

$$R_2 = R_1\left(\frac{V_{OUT}}{V_{REF}} - 1\right) \tag{6}$$

$$V_{OUT} = 1.23\left(1 + \frac{R_2}{R_1}\right) \quad \text{Select R1} = 1k$$
$$R_2 = R_1\left(\frac{V_{OUT}}{V_{REF}} - 1\right) = 1k\left(\frac{10V}{1.23V} - 1\right) \tag{7}$$

R_2 = 1 k (8.13 − 1) = 7.13 k, closest 1% value is 7.15 k

8.2.2.2.2 Inductor Selection (L1)

1. Calculate the inductor Volt • microsecond constant, E • T (V • µs), from Equation 8:

Copyright © 2021 Texas Instruments Incorporated

$$E \times T = \left(V_{IN} - V_{OUT}\right) \frac{V_{OUT}}{V_{IN}} \times \frac{1000}{F(\text{in kHz})} \left(V \times \mu s\right) \quad (8)$$

Calculate E • T (V • µs)

$$E \times T = (25 - 10) \times \frac{10}{25} \times \frac{1000}{52} = 115 \text{ V} \times \mu s \quad (9)$$

2. Use the E • T value from the previous formula and match it with the E • T number on the vertical axis of the Inductor value selection guide shown in Figure 8-8.

   E • T = 115 V • µs
3. On the horizontal axis, select the maximum load current.

   I_{LOAD}(Max) = 3 A
4. Identify the inductance region intersected by the E • T value and the maximum load current value, and note the inductor code for that region.

   Inductance Region = H150
5. Identify the inductor value from the inductor code, and select an appropriate inductor from the table shown in Table 8-4. Part numbers are listed for three inductor manufacturers. The inductor chosen must be rated for operation at the LM2576 switching frequency (52 kHz) and for a current rating of 1.15 × I_{LOAD}. For additional inductor information, see *Section 8.1.2*.

   Inductor Value = 150 µH

   Choose from *AIE part #415-0936, Pulse Engineering part #PE-531115*, or *Renco part #RL2445*.

8.2.2.2.3 Output Capacitor Selection (C_{OUT})

1. The value of the output capacitor together with the inductor defines the dominate pole-pair of the switching regulator loop. For stable operation, the capacitor must satisfy Equation 10:

$$C_{OUT} \geq 13{,}300 \frac{V_{IN(Max)}}{V_{OUT} \times L(\mu H)} (\mu F)$$

   Equation 10 yields capacitor values between 10 µF and 2200 µF that satisfies the loop requirements for stable operation. But to achieve an acceptable output ripple voltage, (approximately 1% of the output voltage) and transient response, the output capacitor may need to be several times larger than Equation 10 yields.

$$COUT \geq 13{,}300 \frac{25}{10 \times 150} = 22.2 \ \mu F$$

   However, for acceptable output ripple voltage select

   C_{OUT} ≥ 680 µF

   C_{OUT} = 680-µF electrolytic capacitor
2. The capacitor's voltage rating must be at last 1.5 times greater than the output voltage. For a 10-V regulator, a rating of at least 15 V or more is recommended. Higher voltage electrolytic capacitors generally have lower ESR numbers, and for this reason it may be necessary to select a capacitor rate for a higher voltage than would normally be needed.

8.2.2.2.4 Catch Diode Selection (D1)

1. The catch-diode current rating must be at least 1.2 times greater than the maximum load current. Also, if the power supply design must withstand a continuous output short, the diode must have a current rating equal to the maximum current limit of the LM2576. The most stressful condition for this diode is an overload or shorted output. See Table 8-3. For this example, a 3.3-A current rating is adequate.

Copyright © 2021 Texas Instruments Incorporated

2. The reverse voltage rating of the diode should be at least 1.25 times the maximum input voltage. Use a 30-V 31DQ03 Schottky diode, or any of the suggested fast-recovery diodes in Table 8-3.

8.2.2.2.5 Input Capacitor (C_{IN})

An aluminum or tantalum electrolytic bypass capacitor located close to the regulator is needed for stable operation. A 100-µF aluminum electrolytic capacitor located near the input and ground pins provides sufficient bypassing.

Table 8-3. Diode Selection Guide

V_R	SCHOTTKY		FAST RECOVERY	
	3 A	4 A to 6 A	3 A	4 A to 6 A
20 V	1N5820 MBR320P SR302	1N5823	The following diodes are all rated to 100-V 31DF1 HER302	The following diodes are all rated to 100-V 50WF10 MUR410 HER602
30 V	1N5821 MBR330 31DQ03 SR303	50WQ03 1N5824		
40 V	1N5822 MBR340 31DQ04 SR304	MBR340 50WQ04 1N5825		
50 V	MBR350 31DQ05 SR305	50WQ05		
60 V	MBR360 DQ06 SR306	50WR06 50SQ060		

Table 8-4. Inductor Selection by Manufacturer's Part Number

INDUCTOR CODE	INDUCTOR VALUE	SCHOTT(1)	PULSE ENG.(2)	RENCO(3)
L47	47 µH	671 26980	PE-53112	RL2442
L68	68 µH	671 26990	PE-92114	RL2443
L100	100 µH	671 27000	PE-92108	RL2444
L150	150 µH	671 27010	PE-53113	RL1954
L220	220 µH	671 27020	PE-52626	RL1953
L330	330 µH	671 27030	PE-52627	RL1952
L470	470 µH	671 27040	PE-53114	RL1951
L680	680 µH	671 27050	PE-52629	RL1950
H150	150 µH	671 27060	PE-53115	RL2445
H220	220 µH	671 27070	PE-53116	RL2446
H330	330 µH	671 27080	PE-53117	RL2447
H470	470 µH	671 27090	PE-53118	RL1961
H680	680 µH	671 27100	PE-53119	RL1960
H1000	1000 µH	671 27110	PE-53120	RL1959
H1500	1500 µH	671 27120	PE-53121	RL1958
H2200	2200 µH	671 27130	PE-53122	RL2448

(1) Schott Corporation, (612) 475-1173, 1000 Parkers Lake Road, Wayzata, MN 55391.
(2) Pulse Engineering, (619) 674-8100, P.O. Box 12235, San Diego, CA 92112.
(3) Renco Electronics Incorporated, (516) 586-5566, 60 Jeffryn Blvd. East, Deer Park, NY 11729.

Copyright © 2021 Texas Instruments Incorporated

9 Power Supply Recommendations

As in any switching regulator, layout is very important. Rapidly switching currents associated with wiring inductance generate voltage transients which can cause problems. For minimal inductance and ground loops, the length of the leads indicated by heavy lines should be kept as short as possible. Single-point grounding (as indicated) or ground plane construction should be used for best results. When using the adjustable version, physically locate the programming resistors near the regulator, to keep the sensitive feedback wiring short.

Copyright © 2021 Texas Instruments Incorporated

10 Layout

10.1 Layout Guidelines

Board layout is critical for the proper operation of switching power supplies. First, the ground plane area must be sufficient for thermal dissipation purposes. Second, appropriate guidelines must be followed to reduce the effects of switching noise. Switch mode converters are very fast switching devices. In such cases, the rapid increase of input current combined with the parasitic trace inductance generates unwanted L di/dt noise spikes. The magnitude of this noise tends to increase as the output current increases. This noise may turn into electromagnetic interference (EMI) and can also cause problems in device performance. Therefore, take care in layout to minimize the effect of this switching noise. The most important layout rule is to keep the AC current loops as small as possible. Figure 10-1 shows the current flow in a buck converter. The top schematic shows a dotted line which represents the current flow during the top-switch ON-state. The middle schematic shows the current flow during the top-switch OFF-state. The bottom schematic shows the currents referred to as AC currents. These AC currents are the most critical because they are changing in a very short time period. The dotted lines of the bottom schematic are the traces to keep as short and wide as possible. This also yields a small loop area reducing the loop inductance. To avoid functional problems due to layout, review the PCB layout example. Best results are achieved if the placement of the LM2576 device, the bypass capacitor, the Schottky diode, RFBB, RFBT, and the inductor are placed as shown in Figure 10-2.TI also recommends using 2-oz copper boards or heavier to help thermal dissipation and to reduce the parasitic inductances of board traces. See application note *AN-1229 SIMPLE SWITCHER® PCB Layout Guidelines* (SNVA054) for more information.

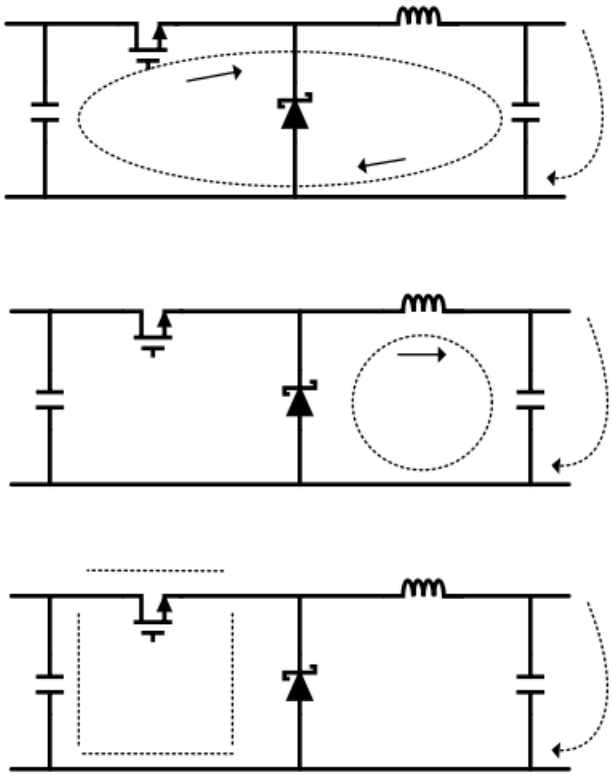

Figure 10-1. Current Flow in Buck Application

Copyright © 2021 Texas Instruments Incorporated

10.2 Layout Example

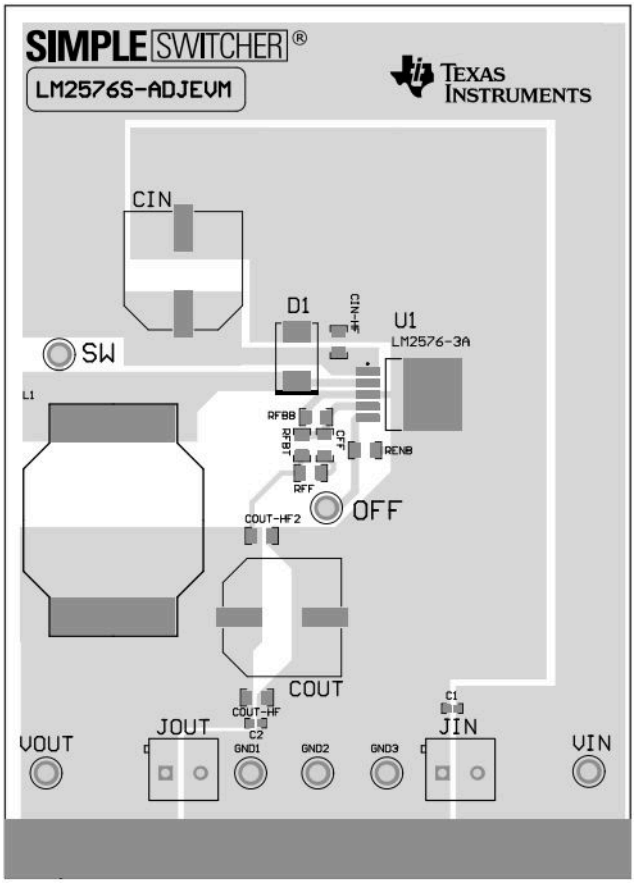

Figure 10-2. LM2576xx Layout Example

10.3 Grounding

To maintain output voltage stability, the power ground connections must be low-impedance (see Figure 8-3 and Figure 8-9). For the 5-lead TO-220 and DDPAK/TO-263 style package, both the tab and pin 3 are ground and either connection may be used, as they are both part of the same copper lead frame.

10.4 Heat Sink and Thermal Considerations

In many cases, only a small heat sink is required to keep the LM2576 junction temperature within the allowed operating range. For each application, to determine whether or not a heat sink is required, the following must be identified:

1. Maximum ambient temperature (in the application).
2. Maximum regulator power dissipation (in application).
3. Maximum allowed junction temperature (125°C for the LM2576). For a safe, conservative design, a temperature approximately 15°C cooler than the maximum temperatures must be selected.
4. LM2576 package thermal resistances θ_{JA} and θ_{JC}.

Total power dissipated by the LM2576 can be estimated in Equation 10:

$$P_D = (V_{IN})(I_Q) + (V_O/V_{IN})(I_{LOAD})(V_{SAT}) \quad (12)$$

where

- I_Q (quiescent current) and V_{SAT} can be found in *Section 6.11* shown previously,
- V_{IN} is the applied minimum input voltage, V_O is the regulated output voltage,

Copyright © 2021 Texas Instruments Incorporated

- and I_{LOAD} is the load current.

The dynamic losses during turnon and turnoff are negligible if a Schottky type catch diode is used.

When no heat sink is used, the junction temperature rise can be determined by Equation 11:

$$\Delta T_J = (P_D)(\theta_{JA}) \quad (13)$$

To arrive at the actual operating junction temperature, add the junction temperature rise to the maximum ambient temperature.

$$T_J = \Delta T_J + T_A \quad (14)$$

If the actual operating junction temperature is greater than the selected safe operating junction temperature determined in step 3, then a heat sink is required.

When using a heat sink, the junction temperature rise can be determined by Equation 12:

$$\Delta T_J = (P_D)(\theta_{JC} + \theta_{interface} + \theta_{Heat\ sink}) \quad (15)$$

The operating junction temperature is:

$$T_J = T_A + \Delta T_J \quad (16)$$

As in Equation 14, if the actual operating junction temperature is greater than the selected safe operating junction temperature, then a larger heat sink is required (one that has a lower thermal resistance).

Copyright © 2021 Texas Instruments Incorporated

11 Device and Documentation Support

11.1 Device Support

11.1.1 Device Nomenclature

11.1.1.1 Definition of Terms

BUCK REGULATOR A switching regulator topology in which a higher voltage is converted to a lower voltage. Also known as a step-down switching regulator.

BUCK-BOOST REGULATOR A switching regulator topology in which a positive voltage is converted to a negative voltage without a transformer.

DUTY CYCLE (D) Ratio of the output switch's on-time to the oscillator period.

$$\text{for buck regulator} \quad D = \frac{t_{ON}}{T} = \frac{V_{OUT}}{V_{IN}}$$

$$\text{for buck-boost regulator} \quad D = \frac{t_{ON}}{T} = \frac{|V_O|}{|V_O| + V_{IN}} \tag{17}$$

CATCH DIODE OR CURRENT STEERING DIODE The diode which provides a return path for the load current when the LM2576 switch is OFF.

EFFICIENCY (η) The proportion of input power actually delivered to the load.

$$\eta = \frac{P_{OUT}}{P_{IN}} = \frac{P_{OUT}}{P_{OUT} + P_{LOSS}} \tag{18}$$

CAPACITOR EQUIVALENT SERIES RESISTANCE (ESR) The purely resistive component of a real capacitor's impedance (see Figure 11-1). It causes power loss resulting in capacitor heating, which directly affects the capacitor's operating lifetime. When used as a switching regulator output filter, higher ESR values result in higher output ripple voltages.

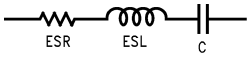

Figure 11-1. Simple Model of a Real Capacitor

Most standard aluminum electrolytic capacitors in the 100 µF–1000 µF range have 0.5Ω to 0.1Ω ESR. Higher-grade capacitors (low-ESR, high-frequency, or low-inductance) in the 100 µF to 1000 µF range generally have ESR of less than 0.15Ω.

EQUIVALENT SERIES INDUCTANCE (ESL) The pure inductance component of a capacitor (see Figure 11-1). The amount of inductance is determined to a large extent on the capacitor's construction. In a buck regulator, this unwanted inductance causes voltage spikes to appear on the output.

OUTPUT RIPPLE VOLTAGE The AC component of the switching regulator's output voltage. It is usually dominated by the output capacitor's ESR multiplied by the inductor's ripple current (ΔI_{IND}). The peak-to-peak value of this sawtooth ripple current can be determined by reading *Section 8.1.3*.

CAPACITOR RIPPLE CURRENT RMS value of the maximum allowable alternating current at which a capacitor can be operated continuously at a specified temperature.

STANDBY QUIESCENT CURRENT (I_{STBY}) Supply current required by the LM2576 when in the standby mode ($\overline{ON}$ /OFF pin is driven to TTL-high voltage, thus turning the output switch OFF).

INDUCTOR RIPPLE CURRENT (ΔI_{IND}) The peak-to-peak value of the inductor current waveform, typically a sawtooth waveform when the regulator is operating in the continuous mode (vs. discontinuous mode).

Copyright © 2021 Texas Instruments Incorporated

CONTINUOUS/ DISCONTINUOUS MODE OPERATION	Relates to the inductor current. In the continuous mode, the inductor current is always flowing and never drops to zero, vs. the discontinuous mode, where the inductor current drops to zero for a period of time in the normal switching cycle.
INDUCTOR SATURATION	The condition which exists when an inductor cannot hold any more magnetic flux. When an inductor saturates, the inductor appears less inductive and the resistive component dominates. Inductor current is then limited only by the DC resistance of the wire and the available source current.
OPERATING VOLT MICROSECOND CONSTANT ($E•T_{op}$)	The product (in Volt•µs) of the voltage applied to the inductor and the time the voltage is applied. This $E•T_{op}$ constant is a measure of the energy handling capability of an inductor and is dependent upon the type of core, the core area, the number of turns, and the duty cycle.

11.1.2 Custom Design with WEBENCH Tools

Create a Custom Design with WEBENCH Tools

11.2 Documentation Support

11.2.1 Related Documentation

For related documentation, see the following:

AN-1229 SIMPLE SWITCHER® PCB Layout Guidelines (SNVA054)

11.3 Support Resources

TI E2E™ support forums are an engineer's go-to source for fast, verified answers and design help — straight from the experts. Search existing answers or ask your own question to get the quick design help you need.

Linked content is provided "AS IS" by the respective contributors. They do not constitute TI specifications and do not necessarily reflect TI's views; see TI's Terms of Use.

11.4 Receiving Notification of Documentation Updates

To receive notification of documentation updates, navigate to the device product folder on ti.com. Click on *Subscribe to updates* to register and receive a weekly digest of any product information that has changed. For change details, review the revision history included in any revised document.

11.5 Trademarks

TI E2E™ is a trademark of Texas Instruments.
SIMPLE SWITCHER® is a registered trademark of TI.
WEBENCH® is a registered trademark of Texas Instruments.
is a registered trademark of Texas Instruments.
All trademarks are the property of their respective owners.

11.6 Electrostatic Discharge Caution



This integrated circuit can be damaged by ESD. Texas Instruments recommends that all integrated circuits be handled with appropriate precautions. Failure to observe proper handling and installation procedures can cause damage.

ESD damage can range from subtle performance degradation to complete device failure. Precision integrated circuits may be more susceptible to damage because very small parametric changes could cause the device not to meet its published specifications.

11.7 Glossary

TI Glossary	This glossary lists and explains terms, acronyms, and definitions.

12 Mechanical, Packaging, and Orderable Information

The following pages include mechanical, packaging, and orderable information. This information is the most current data available for the designated devices. This data is subject to change without notice and revision of this document. For browser-based versions of this data sheet, refer to the left-hand navigation.

Copyright © 2021 Texas Instruments Incorporated

PACKAGING INFORMATION

Orderable Device	Status (1)	Package Type	Package Drawing	Pins	Package Qty	Eco Plan (2)	Lead finish/ Ball material (6)	MSL Peak Temp (3)	Op Temp (°C)	Device Marking (4/5)	Samples
LM2576HVS-12	NRND	DDPAK/ TO-263	KTT	5	45	Non-RoHS & Green	Call TI	Level-3-235C-168 HR	-40 to 125	LM2576 HVS-12 P+	
LM2576HVS-12/NOPB	ACTIVE	DDPAK/ TO-263	KTT	5	45	RoHS-Exempt & Green	SN	Level-3-245C-168 HR	-40 to 125	LM2576 HVS-12 P+	Samples
LM2576HVS-3.3/NOPB	ACTIVE	DDPAK/ TO-263	KTT	5	45	RoHS-Exempt & Green	SN	Level-3-245C-168 HR	-40 to 125	LM2576 HVS-3.3 P+	Samples
LM2576HVS-5.0	NRND	DDPAK/ TO-263	KTT	5	45	Non-RoHS & Green	Call TI	Level-3-235C-168 HR	-40 to 125	LM2576 HVS-5.0 P+	
LM2576HVS-5.0/NOPB	ACTIVE	DDPAK/ TO-263	KTT	5	45	RoHS-Exempt & Green	SN	Level-3-245C-168 HR	-40 to 125	LM2576 HVS-5.0 P+	Samples
LM2576HVS-ADJ	NRND	DDPAK/ TO-263	KTT	5	45	Non-RoHS & Green	Call TI	Level-3-235C-168 HR	-40 to 125	LM2576 HVS-ADJ P+	
LM2576HVS-ADJ/NOPB	ACTIVE	DDPAK/ TO-263	KTT	5	45	RoHS-Exempt & Green	SN	Level-3-245C-168 HR	-40 to 125	LM2576 HVS-ADJ P+	Samples
LM2576HVSX-12	NRND	DDPAK/ TO-263	KTT	5	500	Non-RoHS & Green	Call TI	Level-3-235C-168 HR	-40 to 125	LM2576 HVS-12 P+	
LM2576HVSX-12/NOPB	ACTIVE	DDPAK/ TO-263	KTT	5	500	RoHS-Exempt & Green	SN	Level-3-245C-168 HR	-40 to 125	LM2576 HVS-12 P+	Samples
LM2576HVSX-3.3/NOPB	ACTIVE	DDPAK/ TO-263	KTT	5	500	RoHS-Exempt & Green	SN	Level-3-245C-168 HR	-40 to 125	LM2576 HVS-3.3 P+	Samples
LM2576HVSX-5.0	NRND	DDPAK/ TO-263	KTT	5	500	Non-RoHS & Green	Call TI	Level-3-235C-168 HR	-40 to 125	LM2576 HVS-5.0 P+	
LM2576HVSX-5.0/NOPB	ACTIVE	DDPAK/ TO-263	KTT	5	500	RoHS-Exempt & Green	SN	Level-3-245C-168 HR	-40 to 125	LM2576 HVS-5.0 P+	Samples
LM2576HVSX-ADJ	NRND	DDPAK/ TO-263	KTT	5	500	Non-RoHS & Green	Call TI	Level-3-235C-168 HR	-40 to 125	LM2576 HVS-ADJ P+	
LM2576HVSX-ADJ/NOPB	ACTIVE	DDPAK/ TO-263	KTT	5	500	RoHS-Exempt & Green	SN	Level-3-245C-168 HR	-40 to 125	LM2576 HVS-ADJ P+	Samples
LM2576HVT-12	NRND	TO-220	KC	5	45	Non-RoHS & Green	Call TI	Level-1-NA-UNLIM	-40 to 125	LM2576HVT -12 P+	
LM2576HVT-12/LF03	ACTIVE	TO-220	NDH	5	45	RoHS & Green	SN	Level-1-NA-UNLIM		LM2576HVT -12 P+	Samples
LM2576HVT-12/NOPB	ACTIVE	TO-220	KC	5	45	RoHS & Green	SN	Level-1-NA-UNLIM	-40 to 125	LM2576HVT	Samples

Orderable Device	Status (1)	Package Type	Package Drawing	Pins	Package Qty	Eco Plan (2)	Lead finish/ Ball material (6)	MSL Peak Temp (3)	Op Temp (°C)	Device Marking (4/5)	Samples
										-12 P+	
LM2576HVT-15/LB03	NRND	TO-220	NDH	5	45	Non-RoHS & Green	Call TI	Level-1-NA-UNLIM		LM2576HVT -15 P+	
LM2576HVT-15/LF03	ACTIVE	TO-220	NDH	5	45	RoHS & Green	SN	Level-1-NA-UNLIM		LM2576HVT -15 P+	Samples
LM2576HVT-15/NOPB	ACTIVE	TO-220	KC	5	45	RoHS & Green	SN	Level-1-NA-UNLIM	-40 to 125	LM2576HVT -15 P+	Samples
LM2576HVT-5.0	NRND	TO-220	KC	5	45	Non-RoHS & Green	Call TI	Level-1-NA-UNLIM	-40 to 125	LM2576HVT -5.0 P+	
LM2576HVT-5.0/LB03	NRND	TO-220	NDH	5	45	Non-RoHS & Green	Call TI	Level-1-NA-UNLIM		LM2576HVT -5.0 P+	
LM2576HVT-5.0/LF02	ACTIVE	TO-220	NEB	5	45	RoHS & Green	SN	Level-1-NA-UNLIM		LM2576HVT -5.0 P+	Samples
LM2576HVT-5.0/LF03	ACTIVE	TO-220	NDH	5	45	RoHS & Green	SN	Level-1-NA-UNLIM		LM2576HVT -5.0 P+	Samples
LM2576HVT-5.0/NOPB	ACTIVE	TO-220	KC	5	45	RoHS & Green	SN	Level-1-NA-UNLIM	-40 to 125	LM2576HVT -5.0 P+	Samples
LM2576HVT-ADJ	NRND	TO-220	KC	5	45	Non-RoHS & Green	Call TI	Level-1-NA-UNLIM	-40 to 125	LM2576HVT -ADJ P+	
LM2576HVT-ADJ/LB03	NRND	TO-220	NDH	5	45	Non-RoHS & Green	Call TI	Level-1-NA-UNLIM		LM2576HVT -ADJ P+	
LM2576HVT-ADJ/LF03	ACTIVE	TO-220	NDH	5	45	RoHS & Green	SN	Level-1-NA-UNLIM		LM2576HVT -ADJ P+	Samples
LM2576HVT-ADJ/NOPB	ACTIVE	TO-220	KC	5	45	RoHS & Green	SN	Level-1-NA-UNLIM	-40 to 125	LM2576HVT -ADJ P+	Samples
LM2576S-12	NRND	DDPAK/ TO-263	KTT	5	45	Non-RoHS & Green	Call TI	Level-3-235C-168 HR	-40 to 125	LM2576S -12 P+	
LM2576S-12/NOPB	ACTIVE	DDPAK/ TO-263	KTT	5	45	RoHS-Exempt & Green	SN	Level-3-245C-168 HR	-40 to 125	LM2576S -12 P+	Samples
LM2576S-3.3/NOPB	ACTIVE	DDPAK/ TO-263	KTT	5	45	RoHS-Exempt & Green	SN	Level-3-245C-168 HR	-40 to 125	LM2576S -3.3 P+	Samples
LM2576S-5.0	NRND	DDPAK/ TO-263	KTT	5	45	Non-RoHS & Green	Call TI	Level-3-235C-168 HR	-40 to 125	LM2576S -5.0 P+	
LM2576S-5.0/NOPB	ACTIVE	DDPAK/ TO-263	KTT	5	45	RoHS-Exempt & Green	SN	Level-3-245C-168 HR	-40 to 125	LM2576S -5.0 P+	Samples

Orderable Device	Status (1)	Package Type	Package Drawing	Pins	Package Qty	Eco Plan (2)	Lead finish/ Ball material (6)	MSL Peak Temp (3)	Op Temp (°C)	Device Marking (4/5)	Samples
LM2576S-ADJ/NOPB	ACTIVE	DDPAK/ TO-263	KTT	5	45	RoHS-Exempt & Green	SN	Level-3-245C-168 HR	-40 to 125	LM2576S -ADJ P+	Samples
LM2576SX-3.3/NOPB	ACTIVE	DDPAK/ TO-263	KTT	5	500	RoHS-Exempt & Green	SN	Level-3-245C-168 HR	-40 to 125	LM2576S -3.3 P+	Samples
LM2576SX-5.0/NOPB	ACTIVE	DDPAK/ TO-263	KTT	5	500	RoHS-Exempt & Green	SN	Level-3-245C-168 HR	-40 to 125	LM2576S -5.0 P+	Samples
LM2576SX-ADJ/NOPB	ACTIVE	DDPAK/ TO-263	KTT	5	500	RoHS-Exempt & Green	SN	Level-3-245C-168 HR	-40 to 125	LM2576S -ADJ P+	Samples
LM2576T-12	NRND	TO-220	KC	5	45	Non-RoHS & Green	Call TI	Level-1-NA-UNLIM	-40 to 125	LM2576T -12 P+	
LM2576T-12/LB03	NRND	TO-220	NDH	5	45	Non-RoHS & Green	Call TI	Level-1-NA-UNLIM		LM2576T -12 P+	
LM2576T-12/LF03	ACTIVE	TO-220	NDH	5	45	RoHS & Green	SN	Level-1-NA-UNLIM		LM2576T -12 P+	Samples
LM2576T-12/NOPB	ACTIVE	TO-220	KC	5	45	RoHS & Green	SN	Level-1-NA-UNLIM	-40 to 125	LM2576T -12 P+	Samples
LM2576T-15/LF03	ACTIVE	TO-220	NDH	5	45	RoHS & Green	SN	Level-1-NA-UNLIM		LM2576T -15 P+	Samples
LM2576T-15/NOPB	ACTIVE	TO-220	KC	5	45	RoHS & Green	SN	Level-1-NA-UNLIM	-40 to 125	LM2576T -15 P+	Samples
LM2576T-3.3/LF03	ACTIVE	TO-220	NDH	5	45	RoHS & Green	SN	Level-1-NA-UNLIM		LM2576T -3.3 P+	Samples
LM2576T-3.3/NOPB	ACTIVE	TO-220	KC	5	45	RoHS & Green	SN	Level-1-NA-UNLIM	-40 to 125	LM2576T -3.3 P+	Samples
LM2576T-5.0	NRND	TO-220	KC	5	45	Non-RoHS & Green	Call TI	Level-1-NA-UNLIM	-40 to 125	LM2576T -5.0 P+	
LM2576T-5.0/LB03	NRND	TO-220	NDH	5	45	Non-RoHS & Green	Call TI	Level-1-NA-UNLIM		LM2576T -5.0 P+	
LM2576T-5.0/LF02	ACTIVE	TO-220	NEB	5	45	RoHS & Green	SN	Level-1-NA-UNLIM		LM2576T -5.0 P+	Samples
LM2576T-5.0/LF03	ACTIVE	TO-220	NDH	5	45	RoHS & Green	SN	Level-1-NA-UNLIM		LM2576T -5.0 P+	Samples
LM2576T-5.0/NOPB	ACTIVE	TO-220	KC	5	45	RoHS & Green	SN	Level-1-NA-UNLIM	-40 to 125	LM2576T -5.0 P+	Samples

Orderable Device	Status (1)	Package Type	Package Drawing	Pins	Package Qty	Eco Plan (2)	Lead finish/ Ball material (6)	MSL Peak Temp (3)	Op Temp (°C)	Device Marking (4/5)	Samples
LM2576T-ADJ	NRND	TO-220	KC	5	45	Non-RoHS & Green	Call TI	Level-1-NA-UNLIM	-40 to 125	LM2576T -ADJ P+	
LM2576T-ADJ/LB03	NRND	TO-220	NDH	5	45	Non-RoHS & Green	Call TI	Level-1-NA-UNLIM		LM2576T -ADJ P+	
LM2576T-ADJ/LF02	ACTIVE	TO-220	NEB	5	45	RoHS & Green	SN	Level-1-NA-UNLIM		LM2576T -ADJ P+	Samples
LM2576T-ADJ/LF03	ACTIVE	TO-220	NDH	5	45	RoHS & Green	SN	Level-1-NA-UNLIM		LM2576T -ADJ P+	Samples
LM2576T-ADJ/NOPB	ACTIVE	TO-220	KC	5	45	RoHS & Green	SN	Level-1-NA-UNLIM	-40 to 125	LM2576T -ADJ P+	Samples

(1) The marketing status values are defined as follows:
ACTIVE: Product device recommended for new designs.
LIFEBUY: TI has announced that the device will be discontinued, and a lifetime-buy period is in effect.
NRND: Not recommended for new designs. Device is in production to support existing customers, but TI does not recommend using this part in a new design.
PREVIEW: Device has been announced but is not in production. Samples may or may not be available.
OBSOLETE: TI has discontinued the production of the device.

(2) **RoHS:** TI defines "RoHS" to mean semiconductor products that are compliant with the current EU RoHS requirements for all 10 RoHS substances, including the requirement that RoHS substance do not exceed 0.1% by weight in homogeneous materials. Where designed to be soldered at high temperatures, "RoHS" products are suitable for use in specified lead-free processes. TI may reference these types of products as "Pb-Free".
RoHS Exempt: TI defines "RoHS Exempt" to mean products that contain lead but are compliant with EU RoHS pursuant to a specific EU RoHS exemption.
Green: TI defines "Green" to mean the content of Chlorine (Cl) and Bromine (Br) based flame retardants meet JS709B low halogen requirements of <=1000ppm threshold. Antimony trioxide based flame retardants must also meet the <=1000ppm threshold requirement.

(3) MSL, Peak Temp. - The Moisture Sensitivity Level rating according to the JEDEC industry standard classifications, and peak solder temperature.

(4) There may be additional marking, which relates to the logo, the lot trace code information, or the environmental category on the device.

(5) Multiple Device Markings will be inside parentheses. Only one Device Marking contained in parentheses and separated by a "~" will appear on a device. If a line is indented then it is a continuation of the previous line and the two combined represent the entire Device Marking for that device.

(6) Lead finish/Ball material - Orderable Devices may have multiple material finish options. Finish options are separated by a vertical ruled line. Lead finish/Ball material values may wrap to two lines if the finish value exceeds the maximum column width.

Important Information and Disclaimer: The information provided on this page represents TI's knowledge and belief as of the date that it is provided. TI bases its knowledge and belief on information provided by third parties, and makes no representation or warranty as to the accuracy of such information. Efforts are underway to better integrate information from third parties. TI has taken and continues to take reasonable steps to provide representative and accurate information but may not have conducted destructive testing or chemical analysis on incoming materials and chemicals. TI and TI suppliers consider certain information to be proprietary, and thus CAS numbers and other limited information may not be available for release.

In no event shall TI's liability arising out of such information exceed the total purchase price of the TI part(s) at issue in this document sold by TI to Customer on an annual basis.

TAPE AND REEL INFORMATION

REEL DIMENSIONS

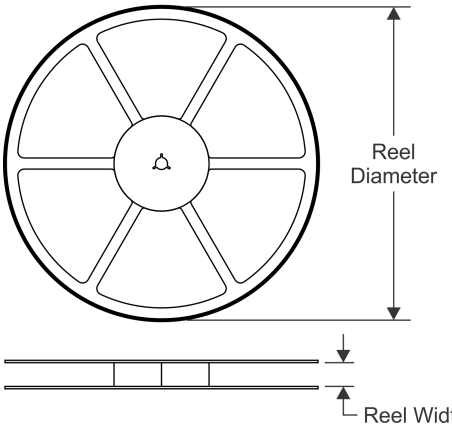

TAPE DIMENSIONS

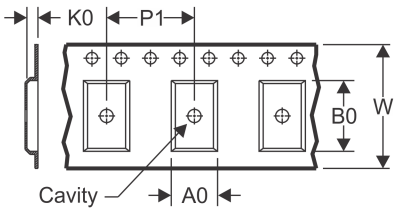

A0	Dimension designed to accommodate the component width
B0	Dimension designed to accommodate the component length
K0	Dimension designed to accommodate the component thickness
W	Overall width of the carrier tape
P1	Pitch between successive cavity centers

QUADRANT ASSIGNMENTS FOR PIN 1 ORIENTATION IN TAPE

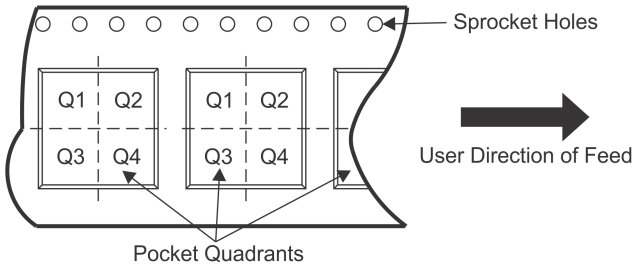

*All dimensions are nominal

Device	Package Type	Package Drawing	Pins	SPQ	Reel Diameter (mm)	Reel Width W1 (mm)	A0 (mm)	B0 (mm)	K0 (mm)	P1 (mm)	W (mm)	Pin1 Quadrant
LM2576HVSX-12	DDPAK/ TO-263	KTT	5	500	330.0	24.4	10.75	14.85	5.0	16.0	24.0	Q2
LM2576HVSX-12/NOPB	DDPAK/ TO-263	KTT	5	500	330.0	24.4	10.75	14.85	5.0	16.0	24.0	Q2
LM2576HVSX-3.3/NOPB	DDPAK/ TO-263	KTT	5	500	330.0	24.4	10.75	14.85	5.0	16.0	24.0	Q2
LM2576HVSX-5.0	DDPAK/ TO-263	KTT	5	500	330.0	24.4	10.75	14.85	5.0	16.0	24.0	Q2
LM2576HVSX-5.0/NOPB	DDPAK/ TO-263	KTT	5	500	330.0	24.4	10.75	14.85	5.0	16.0	24.0	Q2
LM2576HVSX-ADJ	DDPAK/ TO-263	KTT	5	500	330.0	24.4	10.75	14.85	5.0	16.0	24.0	Q2
LM2576HVSX-ADJ/NOPB	DDPAK/ TO-263	KTT	5	500	330.0	24.4	10.75	14.85	5.0	16.0	24.0	Q2
LM2576SX-3.3/NOPB	DDPAK/ TO-263	KTT	5	500	330.0	24.4	10.75	14.85	5.0	16.0	24.0	Q2
LM2576SX-5.0/NOPB	DDPAK/ TO-263	KTT	5	500	330.0	24.4	10.75	14.85	5.0	16.0	24.0	Q2
LM2576SX-ADJ/NOPB	DDPAK/ TO-263	KTT	5	500	330.0	24.4	10.75	14.85	5.0	16.0	24.0	Q2

TAPE AND REEL BOX DIMENSIONS

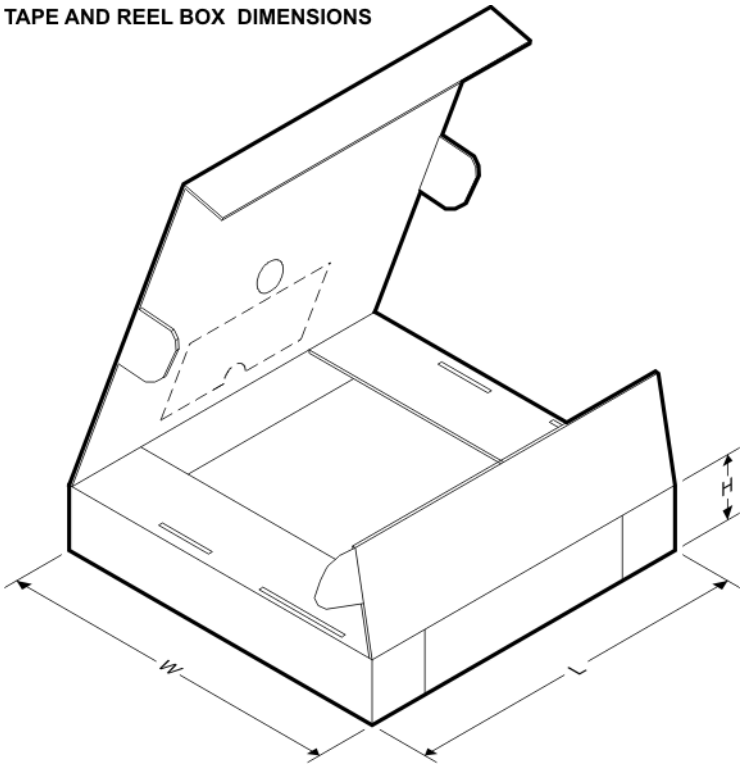

*All dimensions are nominal

Device	Package Type	Package Drawing	Pins	SPQ	Length (mm)	Width (mm)	Height (mm)
LM2576HVSX-12	DDPAK/TO-263	KTT	5	500	367.0	367.0	45.0
LM2576HVSX-12/NOPB	DDPAK/TO-263	KTT	5	500	367.0	367.0	45.0
LM2576HVSX-3.3/NOPB	DDPAK/TO-263	KTT	5	500	367.0	367.0	45.0
LM2576HVSX-5.0	DDPAK/TO-263	KTT	5	500	367.0	367.0	45.0
LM2576HVSX-5.0/NOPB	DDPAK/TO-263	KTT	5	500	367.0	367.0	45.0
LM2576HVSX-ADJ	DDPAK/TO-263	KTT	5	500	367.0	367.0	45.0
LM2576HVSX-ADJ/NOPB	DDPAK/TO-263	KTT	5	500	367.0	367.0	45.0
LM2576SX-3.3/NOPB	DDPAK/TO-263	KTT	5	500	367.0	367.0	45.0
LM2576SX-5.0/NOPB	DDPAK/TO-263	KTT	5	500	367.0	367.0	45.0
LM2576SX-ADJ/NOPB	DDPAK/TO-263	KTT	5	500	367.0	367.0	45.0

TUBE

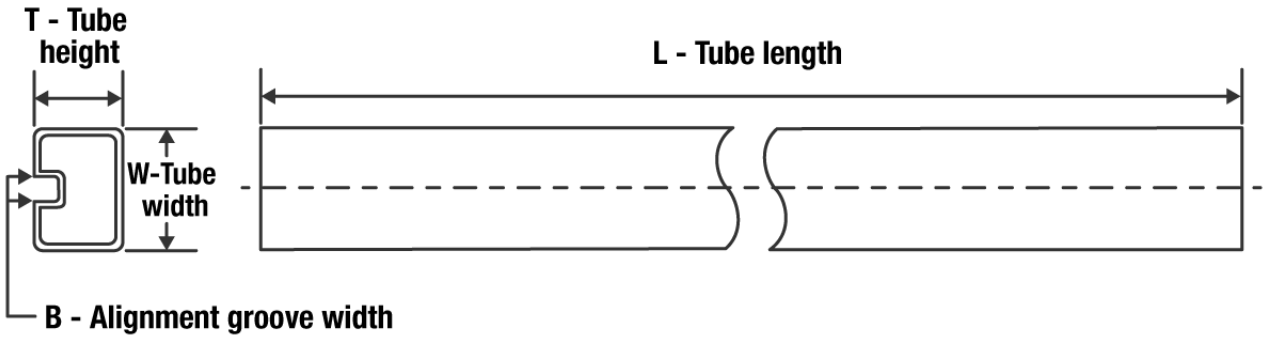

*All dimensions are nominal

Device	Package Name	Package Type	Pins	SPQ	L (mm)	W (mm)	T (µm)	B (mm)
LM2576HVS-12	KTT	TO-263	5	45	502	25	8204.2	9.19
LM2576HVS-12	KTT	TO-263	5	45	502	25	8204.2	9.19
LM2576HVS-12/NOPB	KTT	TO-263	5	45	502	25	8204.2	9.19
LM2576HVS-3.3/NOPB	KTT	TO-263	5	45	502	25	8204.2	9.19
LM2576HVS-5.0	KTT	TO-263	5	45	502	25	8204.2	9.19
LM2576HVS-5.0	KTT	TO-263	5	45	502	25	8204.2	9.19
LM2576HVS-5.0/NOPB	KTT	TO-263	5	45	502	25	8204.2	9.19
LM2576HVS-ADJ	KTT	TO-263	5	45	502	25	8204.2	9.19
LM2576HVS-ADJ	KTT	TO-263	5	45	502	25	8204.2	9.19
LM2576HVS-ADJ/NOPB	KTT	TO-263	5	45	502	25	8204.2	9.19
LM2576HVT-12	KC	TO-220	5	45	502	33	6985	4.06
LM2576HVT-12	KC	TO-220	5	45	502	33	6985	4.06
LM2576HVT-12/LF03	NDH	TO-220	5	45	502	30	30048.2	10.74
LM2576HVT-12/NOPB	KC	TO-220	5	45	502	33	6985	4.06
LM2576HVT-15/LB03	NDH	TO-220	5	45	502	30	30048.2	10.74
LM2576HVT-15/LB03	NDH	TO-220	5	45	502	30	30048.2	10.74
LM2576HVT-15/LF03	NDH	TO-220	5	45	502	30	30048.2	10.74
LM2576HVT-15/NOPB	KC	TO-220	5	45	502	33	6985	4.06
LM2576HVT-5.0	KC	TO-220	5	45	502	33	6985	4.06
LM2576HVT-5.0	KC	TO-220	5	45	502	33	6985	4.06
LM2576HVT-5.0/LB03	NDH	TO-220	5	45	502	30	30048.2	10.74
LM2576HVT-5.0/LB03	NDH	TO-220	5	45	502	30	30048.2	10.74
LM2576HVT-5.0/LF02	NEB	TO-220	5	45	502	30	30048.2	10.74
LM2576HVT-5.0/LF03	NDH	TO-220	5	45	502	30	30048.2	10.74
LM2576HVT-5.0/NOPB	KC	TO-220	5	45	502	33	6985	4.06
LM2576HVT-ADJ	KC	TO-220	5	45	502	33	6985	4.06
LM2576HVT-ADJ	KC	TO-220	5	45	502	33	6985	4.06
LM2576HVT-ADJ/LB03	NDH	TO-220	5	45	502	30	30048.2	10.74

Device	Package Name	Package Type	Pins	SPQ	L (mm)	W (mm)	T (µm)	B (mm)
LM2576HVT-ADJ/LB03	NDH	TO-220	5	45	502	30	30048.2	10.74
LM2576HVT-ADJ/LF03	NDH	TO-220	5	45	502	30	30048.2	10.74
LM2576HVT-ADJ/NOPB	KC	TO-220	5	45	502	33	6985	4.06
LM2576S-12	KTT	TO-263	5	45	502	25	8204.2	9.19
LM2576S-12	KTT	TO-263	5	45	502	25	8204.2	9.19
LM2576S-12/NOPB	KTT	TO-263	5	45	502	25	8204.2	9.19
LM2576S-3.3/NOPB	KTT	TO-263	5	45	502	25	8204.2	9.19
LM2576S-5.0	KTT	TO-263	5	45	502	25	8204.2	9.19
LM2576S-5.0	KTT	TO-263	5	45	502	25	8204.2	9.19
LM2576S-5.0/NOPB	KTT	TO-263	5	45	502	25	8204.2	9.19
LM2576S-ADJ/NOPB	KTT	TO-263	5	45	502	25	8204.2	9.19
LM2576T-12	KC	TO-220	5	45	502	33	6985	4.06
LM2576T-12	KC	TO-220	5	45	502	33	6985	4.06
LM2576T-12/LB03	NDH	TO-220	5	45	502	30	30048.2	10.74
LM2576T-12/LB03	NDH	TO-220	5	45	502	30	30048.2	10.74
LM2576T-12/LF03	NDH	TO-220	5	45	502	30	30048.2	10.74
LM2576T-12/NOPB	KC	TO-220	5	45	502	33	6985	4.06
LM2576T-15/LF03	NDH	TO-220	5	45	502	30	30048.2	10.74
LM2576T-15/NOPB	KC	TO-220	5	45	502	33	6985	4.06
LM2576T-3.3/LF03	NDH	TO-220	5	45	502	30	30048.2	10.74
LM2576T-3.3/NOPB	KC	TO-220	5	45	502	33	6985	4.06
LM2576T-5.0	KC	TO-220	5	45	502	33	6985	4.06
LM2576T-5.0	KC	TO-220	5	45	502	33	6985	4.06
LM2576T-5.0/LB03	NDH	TO-220	5	45	502	30	30048.2	10.74
LM2576T-5.0/LB03	NDH	TO-220	5	45	502	30	30048.2	10.74
LM2576T-5.0/LF02	NEB	TO-220	5	45	502	30	30048.2	10.74
LM2576T-5.0/LF03	NDH	TO-220	5	45	502	30	30048.2	10.74
LM2576T-5.0/NOPB	KC	TO-220	5	45	502	33	6985	4.06
LM2576T-ADJ	KC	TO-220	5	45	502	33	6985	4.06
LM2576T-ADJ	KC	TO-220	5	45	502	33	6985	4.06
LM2576T-ADJ/LB03	NDH	TO-220	5	45	502	30	30048.2	10.74
LM2576T-ADJ/LB03	NDH	TO-220	5	45	502	30	30048.2	10.74
LM2576T-ADJ/LF02	NEB	TO-220	5	45	502	30	30048.2	10.74
LM2576T-ADJ/LF03	NDH	TO-220	5	45	502	30	30048.2	10.74
LM2576T-ADJ/NOPB	KC	TO-220	5	45	502	33	6985	4.06

KC0005A

PACKAGE OUTLINE

TO-220 - 16.51 mm max height

TO-220

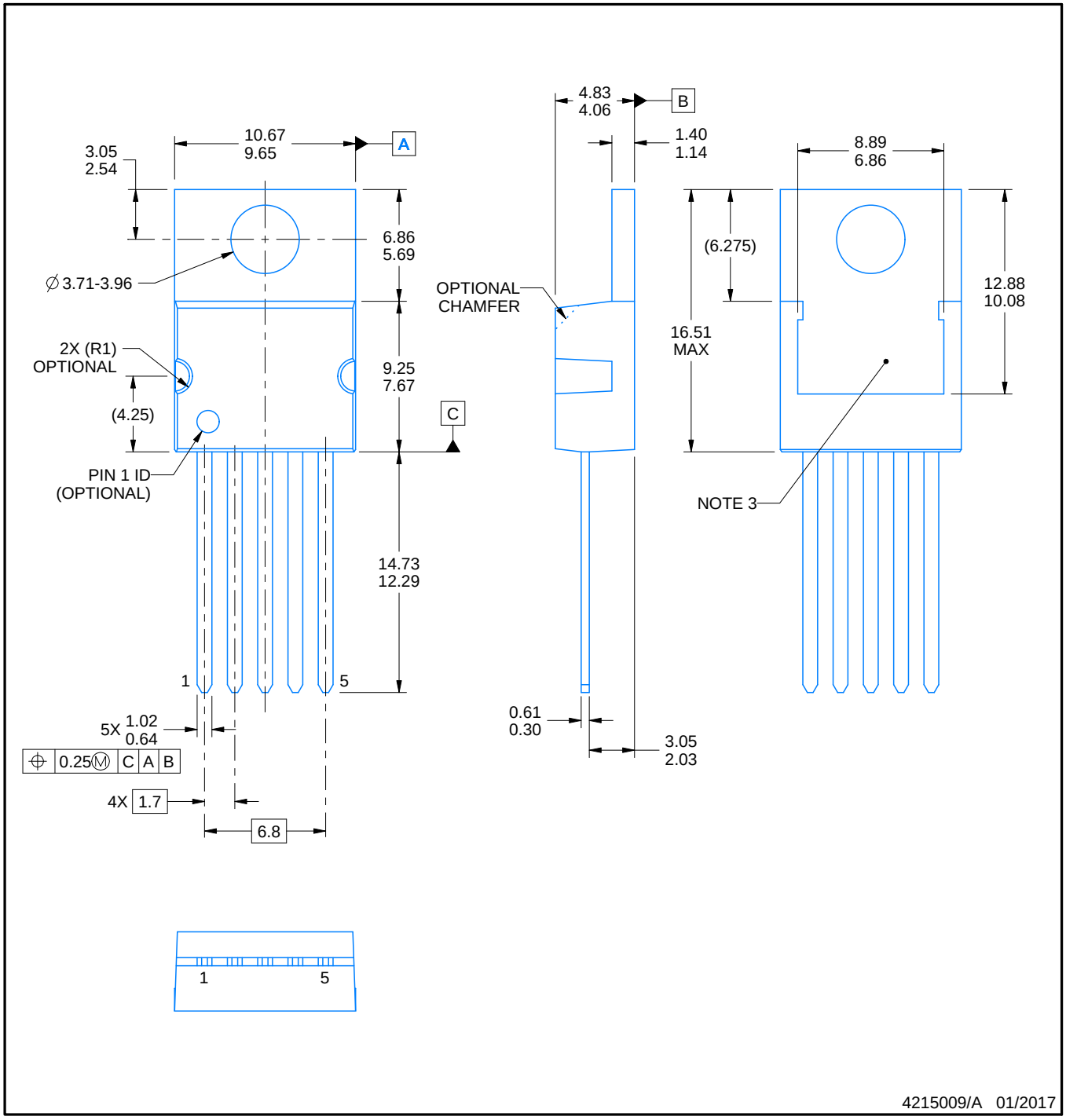

NOTES:

1. All controlling linear dimensions are in inches. Dimensions in brackets are in millimeters. Any dimension in brackets or parenthesis are for reference only. Dimensioning and tolerancing per ASME Y14.5M.
2. This drawing is subject to change without notice.
3. Shape may vary per different assembly sites.

EXAMPLE BOARD LAYOUT

KC0005A

TO-220 - 16.51 mm max height

TO-220

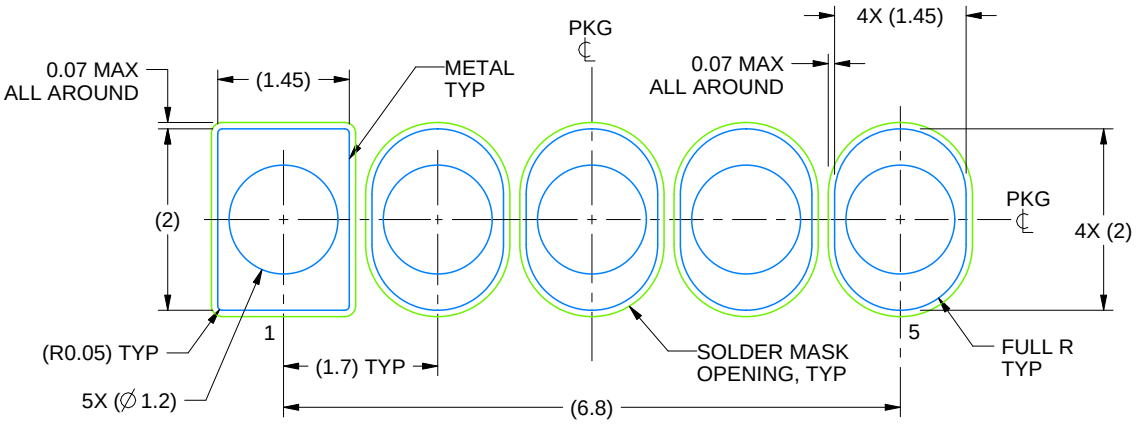

LAND PATTERN
NON-SOLDER MASK DEFINED
SCALE:12X

4215009/A 01/2017

NDH0005D

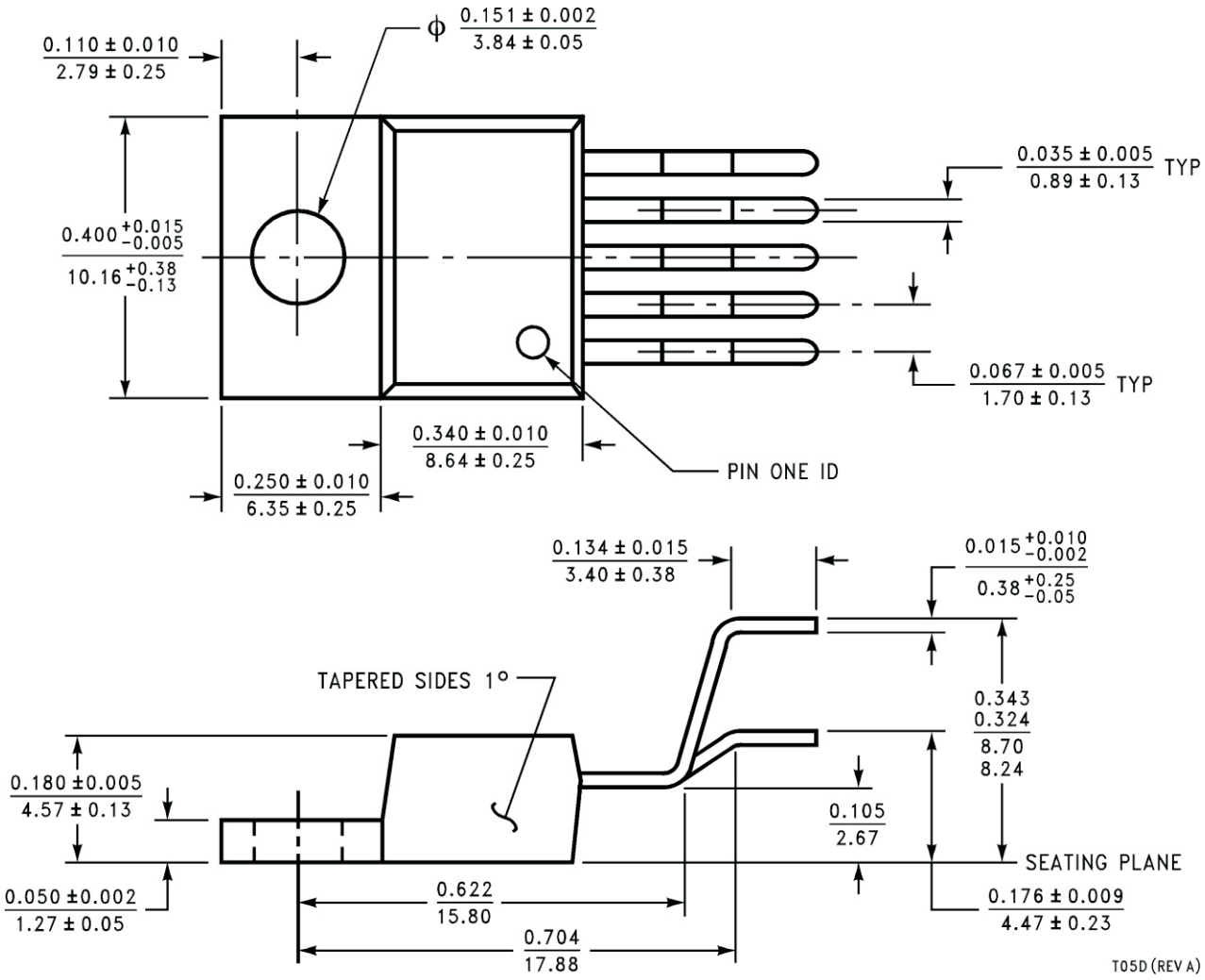
0.110 ± 0.010
2.79 ± 0.25
ϕ 0.151 ± 0.002
3.84 ± 0.05
0.035 ± 0.005
0.89 ± 0.13
TYP
0.400 +0.015 −0.005
10.16 +0.38 −0.13
0.067 ± 0.005
1.70 ± 0.13
TYP
0.340 ± 0.010
8.64 ± 0.25
PIN ONE ID
0.250 ± 0.010
6.35 ± 0.25
0.134 ± 0.015
3.40 ± 0.38
0.015 +0.010 −0.002
0.38 +0.25 −0.05
TAPERED SIDES 1°
0.343
0.324
8.70
8.24
0.180 ±0.005
4.57 ± 0.13
0.105
2.67
SEATING PLANE
0.050 ±0.002
1.27 ± 0.05
0.622
15.80
0.176 ± 0.009
4.47 ± 0.23
0.704
17.88
T05D (REV A)

KTT0005B

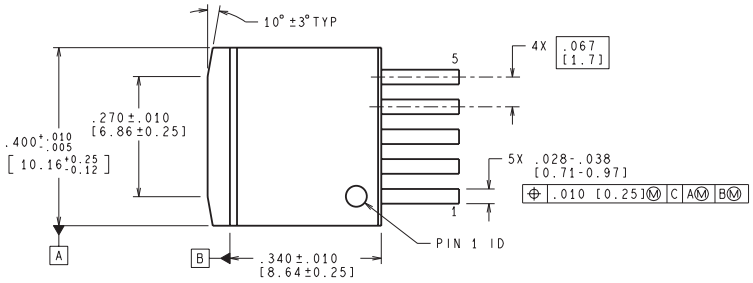

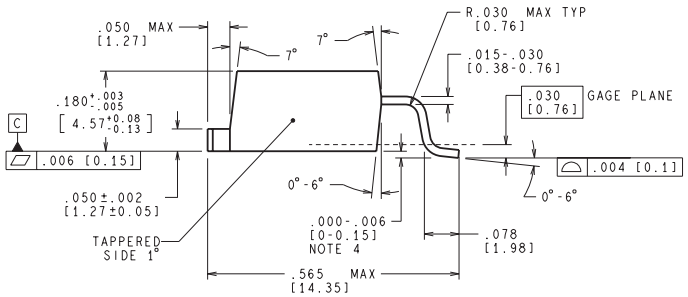

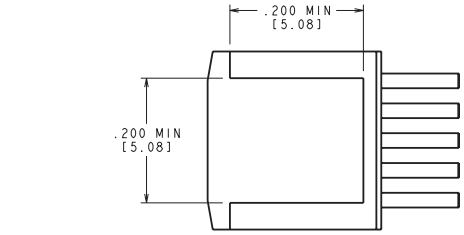

BOTTOM SIDE OF PACKAGE

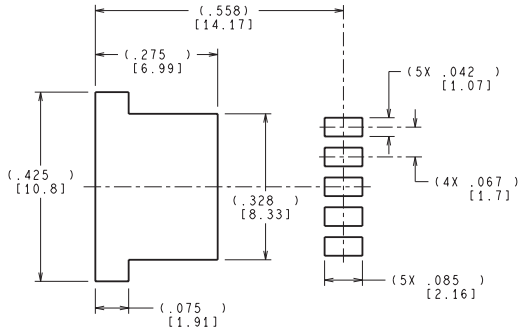

LAND PATTERN RECOMMENDATION

CONTROLLING DIMENSION IS INCH
VALUES IN [ ] ARE MILLIMETERS
DIMENSIONS IN ( ) FOR REFERENCE ONLY

TS5B (Rev D)

NEB0005B

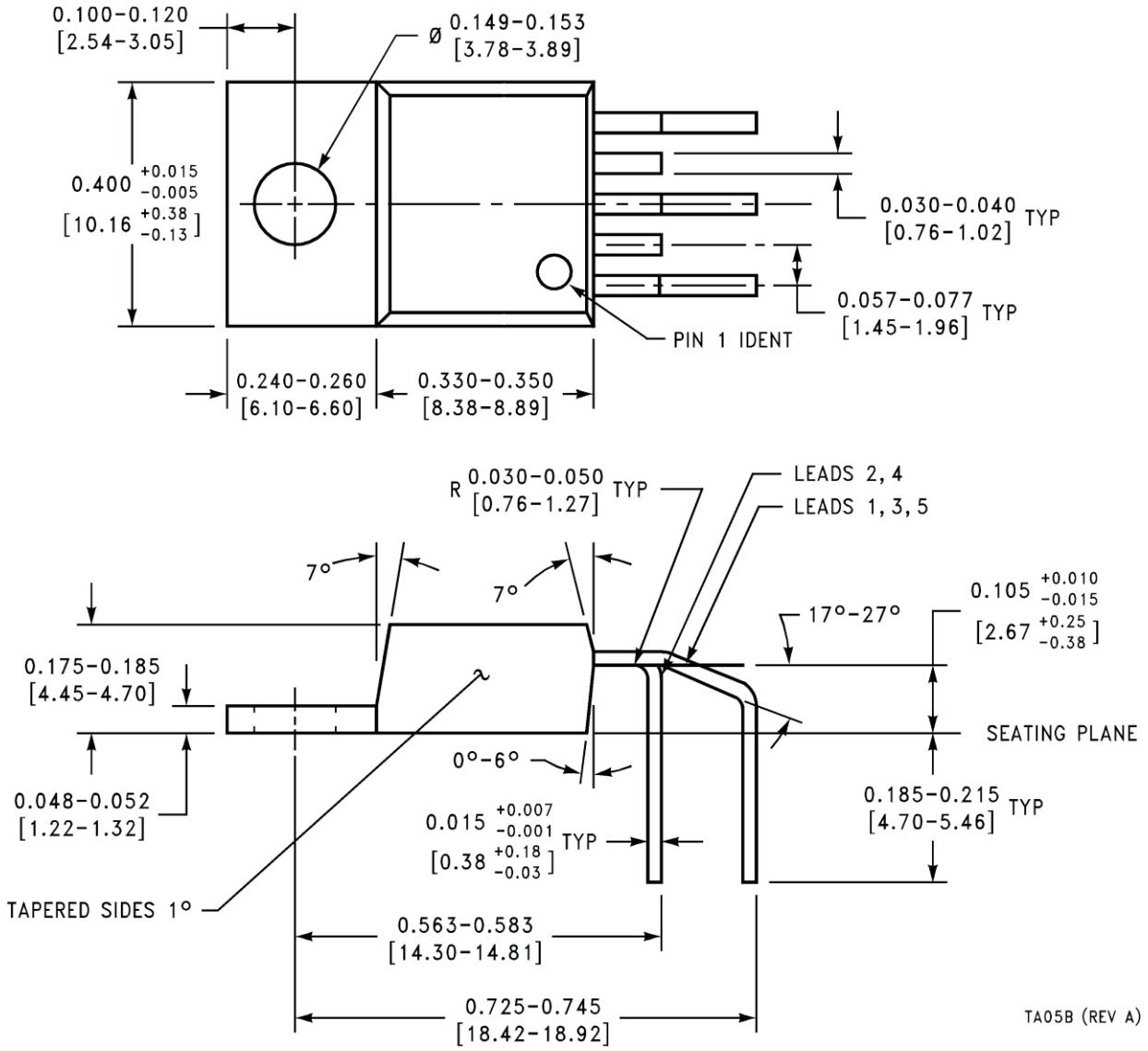
0.100–0.120
[2.54–3.05]
Ø 0.149–0.153
[3.78–3.89]
0.400 +0.015 −0.005
[10.16 +0.38 −0.13]
0.030–0.040 TYP
[0.76–1.02]
0.057–0.077 TYP
[1.45–1.96]
PIN 1 IDENT
0.240–0.260
[6.10–6.60]
0.330–0.350
[8.38–8.89]
R 0.030–0.050 TYP
[0.76–1.27]
LEADS 2, 4
LEADS 1, 3, 5
7°
7°
17°–27°
0.105 +0.010 −0.015
[2.67 +0.25 −0.38]
0.175–0.185
[4.45–4.70]
SEATING PLANE
0°–6°
0.048–0.052
[1.22–1.32]
0.185–0.215 TYP
[4.70–5.46]
0.015 +0.007 −0.001 TYP
[0.38 +0.18 −0.03]
TAPERED SIDES 1°
0.563–0.583
[14.30–14.81]
0.725–0.745
[18.42–18.92]
TA05B (REV A)

IMPORTANT NOTICE AND DISCLAIMER

TI PROVIDES TECHNICAL AND RELIABILITY DATA (INCLUDING DATA SHEETS), DESIGN RESOURCES (INCLUDING REFERENCE DESIGNS), APPLICATION OR OTHER DESIGN ADVICE, WEB TOOLS, SAFETY INFORMATION, AND OTHER RESOURCES “AS IS” AND WITH ALL FAULTS, AND DISCLAIMS ALL WARRANTIES, EXPRESS AND IMPLIED, INCLUDING WITHOUT LIMITATION ANY IMPLIED WARRANTIES OF MERCHANTABILITY, FITNESS FOR A PARTICULAR PURPOSE OR NON-INFRINGEMENT OF THIRD PARTY INTELLECTUAL PROPERTY RIGHTS.

These resources are intended for skilled developers designing with TI products. You are solely responsible for (1) selecting the appropriate TI products for your application, (2) designing, validating and testing your application, and (3) ensuring your application meets applicable standards, and any other safety, security, regulatory or other requirements.

These resources are subject to change without notice. TI grants you permission to use these resources only for development of an application that uses the TI products described in the resource. Other reproduction and display of these resources is prohibited. No license is granted to any other TI intellectual property right or to any third party intellectual property right. TI disclaims responsibility for, and you will fully indemnify TI and its representatives against, any claims, damages, costs, losses, and liabilities arising out of your use of these resources.

TI’s products are provided subject to TI’s Terms of Sale or other applicable terms available either on ti.com or provided in conjunction with such TI products. TI’s provision of these resources does not expand or otherwise alter TI’s applicable warranties or warranty disclaimers for TI products.

TI objects to and rejects any additional or different terms you may have proposed.

Mailing Address: Texas Instruments, Post Office Box 655303, Dallas, Texas 75265
Copyright © 2022, Texas Instruments Incorporated