LM4050-N/-Q1 Precision Micropower Shunt Voltage Reference

1 Features

- Small Package: SOT-23
- No Output Capacitor Required
- Tolerates Capacitive Loads
- Fixed Reverse Breakdown Voltages of 2.048 V, 2.5 V, 4.096 V, 5 V, 8.192 V, and 10 V
- Key Specifications (LM4050-N)
  - Output Voltage Tolerance (A Grade, 25°C) ±0.1% (Maximum)
  - Low Output Noise (10 Hz to 10 kHz) 41 µVrms (Typical)
  - Wide Operating Current Range 60 µA to 15 mA
  - Industrial Temperature Range −40°C to 85°C
  - Extended Temperature Range −40°C to 125°C
  - Low Temperature Coefficient 50 ppm/°C (max)
  - LM4050-N-Q1 is AEC-Q100 Grade 1 Qualified and are Manufactured on an Automotive Grade Flow

2 Applications

- Portable, Battery-Powered Equipment
- Data Acquisition Systems
- Instrumentation
- Process Control
- Energy Management
- Product Testing
- Automotive
- Precision Audio Components

3 Description

Ideal for space-critical applications, the LM4050-N precision voltage reference is available in the sub-miniature (3 mm × 1.3 mm) SOT-23 surface-mount package. The LM4050-N design eliminates the need for an external stabilizing capacitor while ensuring stability with any capacitive load, thus making the LM4050-N easy to use. Further reducing design effort is the availability of several fixed reverse breakdown voltages: 2.048 V, 2.5 V, 4.096 V, 5 V, 8.192 V, and 10 V. The minimum operating current increases from 60 µA for the LM4050-N-2.0 to 100 µA for the LM4050-N-10.0. All versions have a maximum operating current of 15 mA.

The LM4050-N utilizes fuse and Zener-zap reverse breakdown voltage trim during wafer sort to ensure that the prime parts have an accuracy of better than ±0.1% (A grade) at 25°C. Bandgap reference temperature drift curvature correction and low dynamic impedance ensure stable reverse breakdown voltage accuracy over a wide range of operating temperatures and currents.

All grades and voltage options of the LM4050-N are available in both an industrial temperature range (−40°C and 85°C) and an extended temperature range (−40°C and 125°C).

Device Information(1)

PART NUMBER	PACKAGE	BODY SIZE (NOM)
LM4050-N	SOT-23 (3)	2.92 mm × 1.30 mm
LM4050-N-Q1		

(1) For all available packages, see the orderable addendum at the end of the data sheet.

Shunt Regulator Schematic

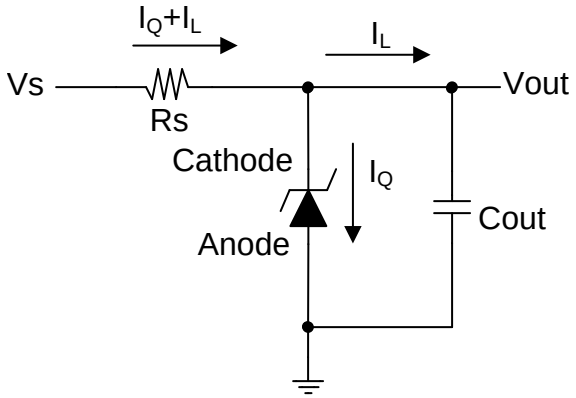

An IMPORTANT NOTICE at the end of this data sheet addresses availability, warranty, changes, use in safety-critical applications, intellectual property matters and other important disclaimers. PRODUCTION DATA.

Table of Contents

1 Features ... 1
2 Applications ... 1
3 Description ... 1
4 Revision History ... 2
5 Pin Configuration and Functions ... 3
6 Specifications ... 3
6.1 Absolute Maximum Ratings ... 3
6.2 ESD Ratings ... 3
6.3 Recommended Operating Conditions ... 4
6.4 Thermal Information ... 4
6.5 Electrical Characteristics: 2-V Option ... 5
6.6 Electrical Characteristics: 2.5-V Option ... 6
6.7 Electrical Characteristics: 4.1-V Option ... 7
6.8 Electrical Characteristics: 5-V Option ... 8
6.9 Electrical Characteristics: 8.2-V Option ... 9
6.10 Electrical Characteristics: 10-V Option ... 10
6.11 Typical Characteristics ... 11
7 Parameter Measurement Information ... 12
8 Detailed Description ... 13
8.1 Overview ... 13
8.2 Functional Block Diagram ... 13
8.3 Feature Description ... 13
8.4 Device Functional Modes ... 13
9 Application and Implementation ... 14
9.1 Application Information ... 14
9.2 Typical Applications ... 15
10 Power Supply Recommendations ... 21
11 Layout ... 21
11.1 Layout Guidelines ... 21
11.2 Layout Example ... 21
12 Device and Documentation Support ... 22
12.1 Related Links ... 22
12.2 Community Resources ... 22
12.3 Trademarks ... 22
12.4 Electrostatic Discharge Caution ... 22
12.5 Glossary ... 22
13 Mechanical, Packaging, and Orderable Information ... 22

4 Revision History

NOTE: Page numbers for previous revisions may differ from page numbers in the current version.

Changes from Revision F (June 2015) to Revision G	Page
• Added *ESD Ratings* table, *Feature Description* section, *Device Functional Modes*, *Application and Implementation* section, *Power Supply Recommendations* section, *Layout* section, *Device and Documentation Support* section, and *Mechanical, Packaging, and Orderable Information* section	1
• Removed Vapor Phase and Infrared Lead Temperatures from Abs Max Ratings table.	3

Changes from Revision E (April 2013) to Revision F	Page
• Deleted "-25" from (LM4050-N) in Key Specifications title and "A/-Q1B/-Q1C" from Key Specification re: auto grade	1
• Added Maximum Junction Temperature to Abs Max Ratings table	3
• Added table notes to Operating Ratings table to clarify operating and high junction temperature ranges	4
• Deleted "-N" from part numbers in EC table "Limits" column headers	5

Changes from Revision D (April 2013) to Revision E	Page
• Changed layout of National Data Sheet to TI format	20

Copyright © 2000–2015, Texas Instruments Incorporated

5 Pin Configuration and Functions

DBZ Package
3-Pin SOT-23
Top View

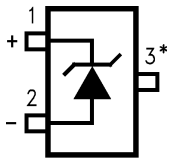

*This pin must be left floating or connected to pin 2.

Pin Functions

PIN		I/O	DESCRIPTION
NAME	NO.		
Cathode	1	I/O	Shunt current and input voltage
Anode	2	O	Common pin, normally connected to ground
NC	3	—	No internal connection

6 Specifications

6.1 Absolute Maximum Ratings

See (1), (2)

	MIN	MAX	UNIT
Reverse Current		20	mA
Forward Current		10	mA
Power Dissipation (T_A = 25°C)(3)		280	mW
Maximum Junction Temperature (4)		150	°C
Storage Temperature	–65	150	°C

(1) Stresses beyond those listed under *Absolute Maximum Ratings* may cause permanent damage to the device. These are stress ratings only, which do not imply functional operation of the device at these or any other conditions beyond those indicated under *Recommended Operating Conditions*. Exposure to absolute-maximum-rated conditions for extended periods may affect device reliability.
(2) If Military/Aerospace specified devices are required, please contact the Texas Instruments Sales Office/ Distributors for availability and specifications.
(3) The maximum power dissipation must be derated at elevated temperatures and is dictated by T_{Jmax} (maximum junction temperature), $R_{\theta JA}$ (junction to ambient thermal resistance), and T_A (ambient temperature). The maximum allowable power dissipation at any temperature is $PD_{max} = (T_{Jmax} - T_A)/R_{\theta JA}$ or the number given in the *Absolute Maximum Ratings*, whichever is lower. For the LM4050-N, T_{Jmax} = 150°C, and the typical thermal resistance ($R_{\theta JA}$), when board mounted, is 326°C/W for the SOT-23 package.
(4) High junction temperatures degrade operating lifetimes. Operating lifetime is de-rated for junction temperatures greater than 125°C.

6.2 ESD Ratings

			VALUE	UNIT
$V_{(ESD)}$	Electrostatic discharge	Human body model (HBM), per ANSI/ESDA/JEDEC JS-001(1)	±2000	V
		Charged device model (CDM), per JEDEC specification JESD22-C101(2)	±1000	
		Machine model (MM)	±200	

(1) JEDEC document JEP155 states that 500-V HBM allows safe manufacturing with a standard ESD control process.
(2) JEDEC document JEP157 states that 250-V CDM allows safe manufacturing with a standard ESD control process.

6.3 Recommended Operating Conditions

over operating free-air temperature range (unless otherwise noted) (1)(2)

		MIN	MAX	UNIT
Industrial Temperature Range	Ambient Temperature Range	–40	85	°C
	Junction Temperature Range	–40	85	°C
Extended Temperature Range	Ambient Temperature Range	–40	125	°C
	Junction Temperature	–40	125	°C

(1) The maximum power dissipation must be derated at elevated temperatures and is dictated by T_{Jmax} (maximum junction temperature), $R_{\theta JA}$ (junction to ambient thermal resistance), and T_A (ambient temperature). The maximum allowable power dissipation at any temperature is $PD_{max} = (T_{Jmax} - T_A)/R_{\theta JA}$ or the number given in the *Absolute Maximum Ratings*, whichever is lower. For the LM4050-N, T_{Jmax} = 150°C, and the typical thermal resistance ($R_{\theta JA}$), when board mounted, is 326°C/W for the SOT-23 package.
(2) *Recommended Operating Conditions* are conditions under the device is intended to be functional. For specifications and conditions, see *Electrical Characteristics* section.

6.4 Thermal Information

THERMAL METRIC(1)		LM4050-N/-Q1 DBZ (SOT-23) 3 PINS	UNIT
$R_{\theta JA}$	Junction-to-ambient thermal resistance	287	°C/W
$R_{\theta JC(top)}$	Junction-to-case (top) thermal resistance	106.6	°C/W
$R_{\theta JB}$	Junction-to-board thermal resistance	57.7	°C/W
ψ_{JT}	Junction-to-top characterization parameter	5.5	°C/W
ψ_{JB}	Junction-to-board characterization parameter	56.4	°C/W
$R_{\theta JC(bot)}$	Junction-to-case (bottom) thermal resistance	N/A	°C/W

(1) For more information about traditional and new thermal metrics, see the *Semiconductor and IC Package Thermal Metrics* application report, SPRA953.

Copyright © 2000–2015, Texas Instruments Incorporated

6.5 Electrical Characteristics: 2-V Option

All other limits $T_A = T_J = 25°C$. The grades A, B and C designate initial Reverse Breakdown Voltage tolerances of ±0.1%, ±0.2%, and 0.5% respectively.

PARAMETER		TEST CONDITIONS		MIN(1)	TYP(2)	MAX(1)	UNIT
V_R	Reverse Breakdown Voltage	I_R = 100 µA			2.048		V
	Reverse breakdown voltage tolerance(3)	I_R = 100 µA	LM4050AIM3, LM4050AEM3			±2.048	mV
			LM4050BIM3, LM4050BEM3			±4.096	
			LM4050CIM3, LM4050CEM3			±1024	
		Industrial temperature range $T_A = T_J = T_{MIN}$ to T_{MAX}	LM4050AIM3, LM4050AEM3			±9.0112	
			LM4050BIM3, LM4050BEM3			±11.4688	
			LM4050CIM3, LM4050CEM3			±14.7456	
		Extended temperature range $T_A = T_J = T_{MIN}$ to T_{MAX}	LM4050AIM3, LM4050AEM3			±12.288	
			LM4050BIM3, LM4050BEM3			±14.7456	
			LM4050CIM3, LM4050CEM3			±17.2032	
I_{RMIN}	Minimum operating current	$T_A = T_J = 25°C$			41	60	µA
		$T_A = T_J = T_{MIN}$ to T_{MAX}				65	
$\Delta V_R/\Delta T$	Average reverse breakdown voltage temperature coefficient(3)	I_R = 10 mA			±20		ppm/°C
		I_R = 1 mA			±15		
		I_R = 100 µA, $T_A = T_J = 25°C$			±15		
		I_R = 100 µA, $T_A = T_J = T_{MIN}$ to T_{MAX}				±50	
$\Delta V_R/\Delta I_R$	Reverse breakdown voltage change with operating current change(4)	$I_{RMIN} \le I_R \le$ 1 mA, $T_A = T_J = 25°C$			0.3	0.8	mV
		$I_{RMIN} \le I_R \le$ 1 mA, $T_A = T_J = T_{MIN}$ to T_{MAX}				1.2	
		1 mA $\le I_R \le$ 15 mA, $T_A = T_J = 25°C$			2.3	6	
		1 mA $\le I_R \le$ 15 mA, $T_A = T_J = T_{MIN}$ to T_{MAX}				8	
Z_R	Reverse dynamic impedance	I_R = 1 mA, f = 120 Hz, I_{AC} = 0.1 I_R			0.3		Ω
e_N	Wideband noise	I_R = 100 µA, 10 Hz ≤ f ≤ 10 kHz			34		μV_{rms}
ΔV_R	Reverse breakdown voltage long term stability	t = 1000 hrs, T = 25°C ±0.1°C, I_R = 100 µA			120		ppm
V_{HYST}	Thermal hysteresis (5)	ΔT = −40°C to 125°C			0.7		mV

(1) Limits are 100% production tested at 25°C. Limits over temperature are guaranteed through correlation using Statistical Quality Control (SQC) methods. The limits are used to calculate National's AOQL.
(2) Typicals are at T_J = 25°C and represent most likely parametric norm.
(3) The overtemperature limit for Reverse Breakdown Voltage Tolerance is defined as the room temperature Reverse Breakdown Voltage Tolerance $\pm[(\Delta V_R/\Delta T)(\max\Delta T)(V_R)]$. Where, $\Delta V_R/\Delta T$ is the V_R temperature coefficient, maxΔT is the maximum difference in temperature from the reference point of 25°C to T_{MIN} or T_{MAX}, and V_R is the reverse breakdown voltage. The total overtemperature tolerance for the different grades in the industrial temperature range where maxΔT = 65°C is shown below: A-grade: ±0.425% = ±0.1% ±50 ppm/°C × 65°C B-grade: ±0.525% = ±0.2% ±50 ppm/°C × 65°C C-grade: ±0.825% = ±0.5% ±50 ppm/°C × 65°C. Therefore, as an example, the A-grade LM4050-N-2.5 has an overtemperature Reverse Breakdown Voltage tolerance of ±2.5V × 0.425% = ±11 mV.
(4) Load regulation is measured on pulse basis from no load to the specified load current. Output changes due to die temperature change must be taken into account separately.
(5) Thermal hysteresis is defined as the difference in voltage measured at 25°C after cycling to temperature –40°C and the 25°C measurement after cycling to temperature 125°C.

Copyright © 2000–2015, Texas Instruments Incorporated

6.6 Electrical Characteristics: 2.5-V Option

All other limits $T_A = T_J = 25°C$. The grades A, B and C designate initial Reverse Breakdown Voltage tolerances of ±0.1%, ±0.2%, and 0.5% respectively.

PARAMETER		TEST CONDITIONS		MIN(1)	TYP(2)	MAX(1)	UNIT
V_R	Reverse breakdown voltage	I_R = 100 µA			2.500		V
		I_R = 100 µA	LM4050AIM3, LM4050AEM3			±2.5	mV
			LM4050BIM3, LM4050BEM3			±5	
			LM4050CIM3, LM4050CEM3			±13	
	Reverse breakdown voltage tolerance(3)	Industrial temperature range, $T_A = T_J = T_{MIN}$ to T_{MAX}	LM4050AIM3, LM4050AEM3			±11	mV
			LM4050BIM3, LM4050BEM3			±24	
			LM4050CIM3, LM4050CEM3			±21	
		Extended temperature range, $T_A = T_J = T_{MIN}$ to T_{MAX}	LM4050AIM3, LM4050AEM3			±15	
			LM4050BIM3, LM4050BEM3			±18	
			LM4050CIM3, LM4050CEM3			±25	
I_{RMIN}	Minimum operating current	$T_A = T_J = 25°C$			41	60	µA
		$T_A = T_J = T_{MIN}$ to T_{MAX}				65	
$\Delta V_R/\Delta T$	Average reverse breakdown voltage temperature coefficient(3)	I_R = 10 mA			±20		ppm/°C
		I_R = 1 mA			±15		
		I_R = 100 µA, $T_A = T_J = 25°C$			±15		
		I_R = 100 µA, $T_A = T_J = T_{MIN}$ to T_{MAX}				±50	
$\Delta V_R/\Delta I_R$	Reverse breakdown voltage change with operating current change(4)	$I_{RMIN} \le I_R \le$ 1 mA, $T_A = T_J = 25°C$			0.3	0.8	mV
		$I_{RMIN} \le I_R \le$ 1 mA $T_A = T_J = T_{MIN}$ to T_{MAX}				1.2	
$\Delta V_R/\Delta I_R$	Reverse breakdown voltage change with operating current change(4)	1 mA $\le I_R \le$ 15 mA, $T_A = T_J = 25°C$			2.3	6	mV
		1 mA $\le I_R \le$ 15 mA, $T_A = T_J = T_{MIN}$ to T_{MAX}				8	
Z_R	Reverse dynamic impedance	I_R = 1 mA, f = 120 Hz, $I_{AC} = 0.1\ I_R$			0.3		Ω
e_N	Wideband noise	I_R = 100 µA, 10 Hz ≤ f ≤ 10 kHz			41		μV_{rms}
ΔV_R	Reverse breakdown voltage long term stability	t = 1000 hrs, T = 25°C ±0.1°C, I_R = 100 µA			120		ppm
V_{HYST}	Thermal hysteresis (5)	ΔT = −40°C to 125°C			07		mV

(1) Limits are 100% production tested at 25°C. Limits over temperature are guaranteed through correlation using Statistical Quality Control (SQC) methods. The limits are used to calculate National's AOQL.
(2) Typicals are at T_J = 25°C and represent most likely parametric norm.
(3) The overtemperature limit for Reverse Breakdown Voltage Tolerance is defined as the room temperature Reverse Breakdown Voltage Tolerance $\pm[(\Delta V_R/\Delta T)(\max\Delta T)(V_R)]$. Where, $\Delta V_R/\Delta T$ is the V_R temperature coefficient, maxΔT is the maximum difference in temperature from the reference point of 25°C to T_{MIN} or T_{MAX}, and V_R is the reverse breakdown voltage. The total overtemperature tolerance for the different grades in the industrial temperature range where maxΔT = 65°C is shown below: A-grade: ±0.425% = ±0.1% ±50 ppm/°C × 65°C B-grade: ±0.525% = ±0.2% ±50 ppm/°C × 65°C C-grade: ±0.825% = ±0.5% ±50 ppm/°C × 65°C. Therefore, as an example, the A-grade LM4050-N-2.5 has an overtemperature Reverse Breakdown Voltage tolerance of ±2.5V × 0.425% = ±11 mV.
(4) Load regulation is measured on pulse basis from no load to the specified load current. Output changes due to die temperature change must be taken into account separately.
(5) Thermal hysteresis is defined as the difference in voltage measured at 25°C after cycling to temperature –40°C and the 25°C measurement after cycling to temperature 125°C.

Copyright © 2000–2015, Texas Instruments Incorporated

6.7 Electrical Characteristics: 4.1-V Option

All other limits $T_A = T_J = 25°C$. The grades A, B and C designate initial Reverse Breakdown Voltage tolerances of ±0.1%, ±0.2%, and 0.5% respectively.

PARAMETER		TEST CONDITIONS		MIN	TYP(1)	MAX	UNIT
V_R	Reverse Breakdown Voltage	I_R = 100 µA			4.096		V
	Reverse Breakdown Voltage Tolerance(2)	I_R = 100 µA	LM4050AIM3, LM4050AEM3			±4.1	mV
			LM4050BIM3,LM4050BEM3			±8.2	
			LM4050CIM3, LM4050CEM3			±21	
		Industrial temperature range, $T_A = T_J = T_{MIN}$ to T_{MAX}	LM4050AIM3, LM4050AEM3			±18	
			LM4050BIM3,LM4050BEM3			±22	
			LM4050CIM3, LM4050CEM3			±34	
		Extended temperature range, $T_A = T_J = T_{MIN}$ to T_{MAX}	LM4050AIM3, LM4050AEM3			±25	
			LM4050BIM3,LM4050BEM3			±29	
			LM4050CIM3, LM4050CEM3			±41	
I_{RMIN}	Minimum Operating Current	$T_A = T_J = 25°C$			52	68	µA
		Industrial temperature range, $T_A = T_J = T_{MIN}$ to T_{MAX}				73	
		Extended temperature range, $T_A = T_J = T_{MIN}$ to T_{MAX}				78	
$\Delta V_R/\Delta T$	Average reverse breakdown voltage temperature coefficient(2)	I_R = 10 mA			±30		ppm/°C
		I_R = 1 mA			±20		
		I_R = 100 µA, $T_A = T_J = 25°C$			±20		
		I_R = 100 µA, $T_A = T_J = T_{MIN}$ to T_{MAX}				±50	
$\Delta V_R/\Delta I_R$	Reverse breakdown voltage change with operating current change(3)	$I_{RMIN} \le I_R \le$ 1 mA, $T_A = T_J = 25°C$			0.2	0.9	mV
		$I_{RMIN} \le I_R \le$ 1 mA, $T_A = T_J = T_{MIN}$ to T_{MAX}				1.2	
		1 mA $\le I_R \le$ 15 mA, $T_A = T_J = 25°C$			2	7	
		1 mA $\le I_R \le$ 15 mA, $T_A = T_J = T_{MIN}$ to T_{MAX}				10	
Z_R	Reverse dynamic impedance	I_R = 1 mA, f = 120 Hz, $I_{AC} = 0.1\ I_R$			0.5		Ω
e_N	Wideband noise	I_R = 100 µA, 10 Hz ≤ f ≤ 10 kHz			93		μV_{rms}
ΔV_R	Reverse breakdown voltage long term stability	t = 1000 hrs, T = 25°C ±0.1°C, I_R = 100 µA			120		ppm
V_{HYST}	Thermal hysteresis(4)	ΔT = −40°C to 125°C			1.148		mV

(1) Typicals are at $T_J = 25°C$ and represent most likely parametric norm.
(2) The overtemperature limit for Reverse Breakdown Voltage Tolerance is defined as the room temperature Reverse Breakdown Voltage Tolerance $\pm[(\Delta V_R/\Delta T)(\max\Delta T)(V_R)]$. Where, $\Delta V_R/\Delta T$ is the V_R temperature coefficient, maxΔT is the maximum difference in temperature from the reference point of 25°C to T_{MIN} or T_{MAX}, and V_R is the reverse breakdown voltage. The total overtemperature tolerance for the different grades in the industrial temperature range where maxΔT = 65°C is shown below: A-grade: ±0.425% = ±0.1% ±50 ppm/°C × 65°C B-grade: ±0.525% = ±0.2% ±50 ppm/°C × 65°C C-grade: ±0.825% = ±0.5% ±50 ppm/°C × 65°C. Therefore, as an example, the A-grade LM4050-N-2.5 has an overtemperature Reverse Breakdown Voltage tolerance of ±2.5V × 0.425% = ±11 mV.
(3) Load regulation is measured on pulse basis from no load to the specified load current. Output changes due to die temperature change must be taken into account separately.
(4) Thermal hysteresis is defined as the difference in voltage measured at 25°C after cycling to temperature –40°C and the 25°C measurement after cycling to temperature 125°C.

6.8 Electrical Characteristics: 5-V Option

All other limits $T_A = T_J = 25°C$. The grades A, B and C designate initial Reverse Breakdown Voltage tolerances of ±0.1%, ±0.2% and 0.5% respectively.

PARAMETER		TEST CONDITIONS		MIN(1)	TYP(2)	MAX(1)	UNIT
V_R	Reverse Breakdown Voltage	I_R = 100 µA			5		V
	Reverse Breakdown Voltage Tolerance(3)	I_R = 100 µA	LM4050AIM3, LM4050AEM3			±5	mV
			LM4050BIM3. LM4050BEM3			±10	
			LM4050CIM3, LM4050CEM3			±25	
		Industrial Temp. Range $T_A = T_J = T_{MIN}$ to T_{MAX}	LM4050AIM3, LM4050AEM3			±22	
			LM4050BIM3, LM4050BEM3			±27	
			LM4050CIM3, LM4050CEM3			±42	
		Extended Temp. Range $T_A = T_J = T_{MIN}$ to T_{MAX}	LM4050AIM3, LM4050AEM3			±30	
			LM4050BIM3, LM4050BEM3			±35	
			LM4050CIM3, LM4050CEM3			±50	
I_{RMIN}	Minimum Operating Current	$T_A = T_J = 25°C$			56	74	µA
		Industrial Temp. Range $T_A = T_J = T_{MIN}$ to T_{MAX}				80	
		Extended Temp. Range $T_A = T_J = T_{MIN}$ to T_{MAX}				90	
$\Delta V_R/\Delta T$	Average Reverse Breakdown Voltage Temperature Coefficient(3)	I_R = 10 mA			±30		ppm/°C
		I_R = 1 mA			±20		
		I_R = 100 µA, $T_A = T_J = 25°C$			±20		
		I_R = 100 µA $T_A = T_J = T_{MIN}$ to T_{MAX}				±50	
$\Delta V_R/\Delta I_R$	Reverse Breakdown Voltage Change with Operating Current Change(4)	$I_{RMIN} \le I_R \le$ 1 mA, $T_A = T_J = 25°C$			0.2	1	mV
		$I_{RMIN} \le I_R \le$ 1 mA $T_A = T_J = T_{MIN}$ to T_{MAX}				1.4	
		1 mA $\le I_R \le$ 15 mA, $T_A = T_J = 25°C$			2	8	
		1 mA $\le I_R \le$ 15 mA $T_A = T_J = T_{MIN}$ to T_{MAX}				12	
Z_R	Reverse Dynamic Impedance	I_R = 1 mA, f = 120 Hz			0.5		Ω
		$I_{AC} = 0.1\ I_R$					
e_N	Wideband Noise	I_R = 100 µA 10 Hz ≤ f ≤ 10 kHz			93		μV_{rms}
ΔV_R	Reverse Breakdown Voltage Long Term Stability	t = 1000 hrs T = 25°C ±0.1°C I_R = 100 µA			120		ppm
V_{HYST}	Thermal Hysteresis(5)	ΔT = –40°C to 125°C			1.4		mV

(1) Limits are 100% production tested at 25°C. Limits over temperature are guaranteed through correlation using Statistical Quality Control (SQC) methods. The limits are used to calculate National's AOQL.
(2) Typicals are at T_J = 25°C and represent most likely parametric norm.
(3) The overtemperature limit for Reverse Breakdown Voltage Tolerance is defined as the room temperature Reverse Breakdown Voltage Tolerance $\pm[(\Delta V_R/\Delta T)(\max\Delta T)(V_R)]$. Where, $\Delta V_R/\Delta T$ is the V_R temperature coefficient, maxΔT is the maximum difference in temperature from the reference point of 25°C to T_{MIN} or T_{MAX}, and V_R is the reverse breakdown voltage. The total overtemperature tolerance for the different grades in the industrial temperature range where maxΔT = 65°C is shown below: A-grade: ±0.425% = ±0.1% ±50 ppm/°C × 65°C B-grade: ±0.525% = ±0.2% ±50 ppm/°C × 65°C C-grade: ±0.825% = ±0.5% ±50 ppm/°C × 65°C. Therefore, as an example, the A-grade LM4050-N-2.5 has an overtemperature Reverse Breakdown Voltage tolerance of ±2.5V × 0.425% = ±11 mV.
(4) Load regulation is measured on pulse basis from no load to the specified load current. Output changes due to die temperature change must be taken into account separately.
(5) Thermal hysteresis is defined as the difference in voltage measured at 25°C after cycling to temperature –40°C and the 25°C measurement after cycling to temperature 125°C.

Copyright © 2000–2015, Texas Instruments Incorporated

6.9 Electrical Characteristics: 8.2-V Option

All other limits $T_A = T_J = 25°C$. The grades A, B and C designate initial Reverse Breakdown Voltage tolerances of ±0.1% and ±0.2% and 0.5% respectively.

PARAMETER		TEST CONDITIONS		MIN(1)	TYP(2)	MAX(1)	UNIT
V_R	Reverse Breakdown Voltage	I_R = 150 µA			8.192		V
	Reverse Breakdown Voltage Tolerance (3)	I_R = 150 µA	LM4050AIM3, LM4050AEM3			±8.2	mV
			LM4050BIM3, LM4050BEM3			±16	
			LM4050CIM3, LM4050CEM3			±41	
		Industrial Temp. Range $T_A = T_J = T_{MIN}$ to T_{MAX}	LM4050AIM3, LM4050AEM3			±35	
			LM4050BIM3, LM4050BEM3			±43	
			LM4050CIM3, LM4050CEM3			±68	
		Extended Temp. Range $T_A = T_J = T_{MIN}$ to T_{MAX}	LM4050AIM3, LM4050AEM3			±49	
			LM4050BIM3, LM4050BEM3			±57	
			LM4050CIM3, LM4050CEM3			±82	
I_{RMIN}	Minimum Operating Current	$T_A = T_J = 25°C$			74	91	µA
		Industrial Temp. Range $T_A = T_J = T_{MIN}$ to T_{MAX}				95	
		Extended Temp. Range $T_A = T_J = T_{MIN}$ to T_{MAX}				100	
$\Delta V_R/\Delta T$	Average Reverse Breakdown Voltage Temperature Coefficient (3)	I_R = 10 mA			±40		ppm/°C
		I_R = 1 mA			±20		
		I_R = 150 µA, $T_A = T_J = 25°C$			±20		
		I_R = 150 µA $T_A = T_J = T_{MIN}$ to T_{MAX}				±50	
$\Delta V_R/\Delta I_R$	Reverse Breakdown Voltage Change with Operating Current Change (4)	$I_{RMIN} \le I_R \le$ 1 mA, $T_A = T_J = 25°C$			0.6	1.3	mV
		$I_{RMIN} \le I_R \le$ 1 mA $T_A = T_J = T_{MIN}$ to T_{MAX}				2.5	
		1 mA $\le I_R \le$ 15 mA, $T_A = T_J = 25°C$			7	10	
		1 mA $\le I_R \le$ 15 mA $T_A = T_J = T_{MIN}$ to T_{MAX}				18	
Z_R	Reverse Dynamic Impedance	I_R = 1 mA, f = 120 Hz, $I_{AC} = 0.1\ I_R$			0.6		Ω
e_N	Wideband Noise	I_R = 150 µA 10 Hz ≤ f ≤ 10 kHz			150		μV_{rms}
ΔV_R	Reverse Breakdown Voltage Long Term Stability	t = 1000 hrs T = 25°C ±0.1°C I_R = 150 µA			120		ppm
V_{HYST}	Thermal Hysteresis (5)	ΔT = −40°C to 125°C			2.3		mV

(1) Limits are 100% production tested at 25°C. Limits over temperature are guaranteed through correlation using Statistical Quality Control (SQC) methods. The limits are used to calculate National's AOQL.
(2) Typicals are at T_J = 25°C and represent most likely parametric norm.
(3) The overtemperature limit for Reverse Breakdown Voltage Tolerance is defined as the room temperature Reverse Breakdown Voltage Tolerance $\pm[(\Delta V_R/\Delta T)(\max\Delta T)(V_R)]$. Where, $\Delta V_R/\Delta T$ is the V_R temperature coefficient, maxΔT is the maximum difference in temperature from the reference point of 25°C to T_{MIN} or T_{MAX}, and V_R is the reverse breakdown voltage. The total overtemperature tolerance for the different grades in the industrial temperature range where maxΔT = 65°C is shown below: A-grade: ±0.425% = ±0.1% ±50 ppm/°C × 65°C B-grade: ±0.525% = ±0.2% ±50 ppm/°C × 65°C C-grade: ±0.825% = ±0.5% ±50 ppm/°C × 65°C. Therefore, as an example, the A-grade LM4050-N-2.5 has an overtemperature Reverse Breakdown Voltage tolerance of ±2.5V × 0.425% = ±11 mV.
(4) Load regulation is measured on pulse basis from no load to the specified load current. Output changes due to die temperature change must be taken into account separately.
(5) Thermal hysteresis is defined as the difference in voltage measured at 25°C after cycling to temperature –40°C and the 25°C measurement after cycling to temperature 125°C.

Copyright © 2000–2015, Texas Instruments Incorporated

6.10 Electrical Characteristics: 10-V Option

All other limits $T_A = T_J = 25°C$. The grades A, B and C designate initial Reverse Breakdown Voltage tolerances of ±0.1% and ±0.2% and 0.5% respectively.

PARAMETER		TEST CONDITIONS		MIN(1)	TYP(2)	MAX(1)	UNIT
V_R	Reverse Breakdown Voltage	I_R = 150 µA			10		V
	Reverse Breakdown Voltage Tolerance (3)	I_R = 150 µA	LM4050AIM3, LM4050AEM3			±10	mV (max)
			LM4050BIM3, LM4050BEM3			±20	
			LM4050CIM3, LM4050CEM3			±50	
		Industrial Temp. Range $T_A = T_J = T_{MIN}$ to T_{MAX}	LM4050AIM3, LM4050AEM3			±43	
			LM4050BIM3, LM4050BEM3			±53	
			LM4050CIM3, LM4050CEM3			±83	
		Extended Temp. Range $T_A = T_J = T_{MIN}$ to T_{MAX}	LM4050AIM3, LM4050AEM3			±60	
			LM4050BIM3, LM4050BEM3			±70	
			LM4050CIM3, LM4050CEM3			±100	
I_{RMIN}	Minimum Operating Current	$T_A = T_J = 25°C$			80	100	µA
		Industrial Temp. Range $T_A = T_J = T_{MIN}$ to T_{MAX}				103	
		Extended Temp. Range $T_A = T_J = T_{MIN}$ to T_{MAX}				110	
$\Delta V_R/\Delta T$	Average Reverse Breakdown Voltage Temperature Coefficient (3)	I_R = 10 mA			±40		ppm/°C
		I_R = 1 mA			±20		
		I_R = 150 µA, $T_A = T_J = 25°C$			±20		
		I_R = 150 µA $T_A = T_J = T_{MIN}$ to T_{MAX}				±50	
$\Delta V_R/\Delta I_R$	Reverse Breakdown Voltage Change with Operating Current Change (4)	$I_{RMIN} \le I_R \le$ 1 mA, $T_A = T_J = 25°C$			0.8	1.5	mV
		$I_{RMIN} \le I_R \le$ 1 mA $T_A = T_J = T_{MIN}$ to T_{MAX}				3.5	
		1 mA $\le I_R \le$ 15 mA, $T_A = T_J = 25°C$			8	12	
		1 mA $\le I_R \le$ 15 mA $T_A = T_J = T_{MIN}$ to T_{MAX}				23	
Z_R	Reverse Dynamic Impedance	I_R = 1 mA, f = 120 Hz, $I_{AC} = 0.1\ I_R$			0.7		Ω
e_N	Wideband Noise	I_R = 150 µA 10 Hz ≤ f ≤ 10 kHz			150		μV_{rms}
ΔV_R	Reverse Breakdown Voltage Long Term Stability	t = 1000 hrs T = 25°C ±0.1°C I_R = 150 µA			120		ppm
V_{HYST}	Thermal Hysteresis(5)	ΔT = −40°C to 125°C			2.8		mV

(1) Limits are 100% production tested at 25°C. Limits over temperature are guaranteed through correlation using Statistical Quality Control (SQC) methods. The limits are used to calculate National's AOQL.
(2) Typicals are at T_J = 25°C and represent most likely parametric norm.
(3) The overtemperature limit for Reverse Breakdown Voltage Tolerance is defined as the room temperature Reverse Breakdown Voltage Tolerance $\pm[(\Delta V_R/\Delta T)(\max\Delta T)(V_R)]$. Where, $\Delta V_R/\Delta T$ is the V_R temperature coefficient, maxΔT is the maximum difference in temperature from the reference point of 25°C to T_{MIN} or T_{MAX}, and V_R is the reverse breakdown voltage. The total overtemperature tolerance for the different grades in the industrial temperature range where maxΔT = 65°C is shown below: A-grade: ±0.425% = ±0.1% ±50 ppm/°C × 65°C B-grade: ±0.525% = ±0.2% ±50 ppm/°C × 65°C C-grade: ±0.825% = ±0.5% ±50 ppm/°C × 65°C. Therefore, as an example, the A-grade LM4050-N-2.5 has an overtemperature Reverse Breakdown Voltage tolerance of ±2.5V × 0.425% = ±11 mV.
(4) Load regulation is measured on pulse basis from no load to the specified load current. Output changes due to die temperature change must be taken into account separately.
(5) Thermal hysteresis is defined as the difference in voltage measured at 25°C after cycling to temperature –40°C and the 25°C measurement after cycling to temperature 125°C.

Copyright © 2000–2015, Texas Instruments Incorporated

6.11 Typical Characteristics

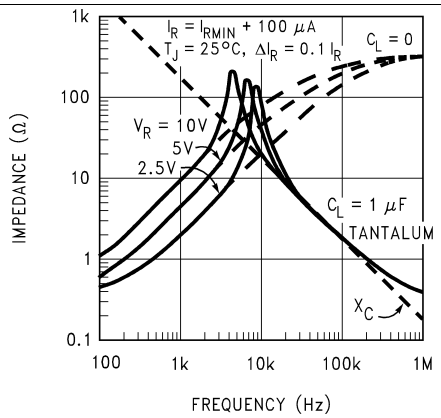

Figure 1. Output Impedance vs Frequency

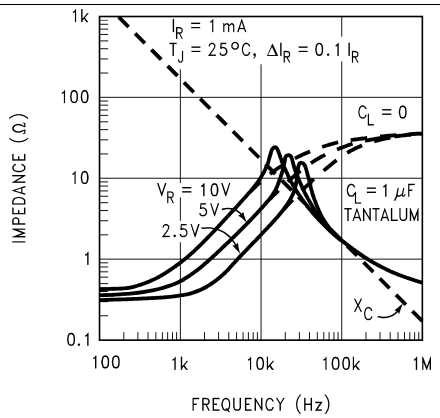

Figure 2. Output Impedance vs Frequency

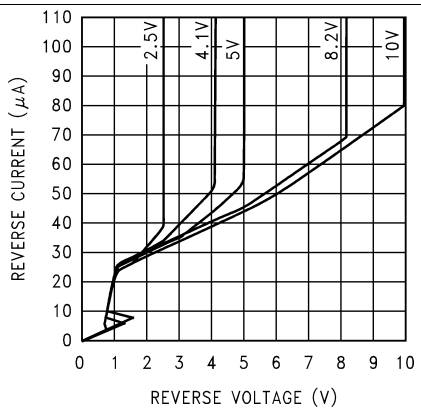

Figure 3. Reverse Characteristics and Minimum Operating Current

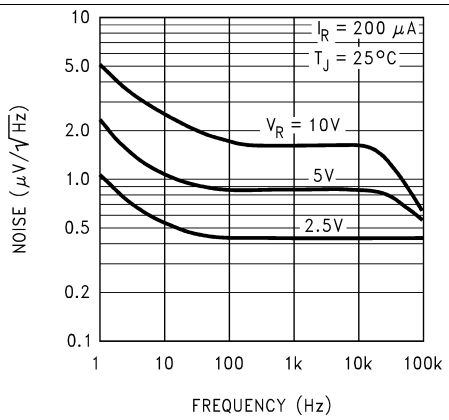

Figure 4. Noise Voltage vs Frequency

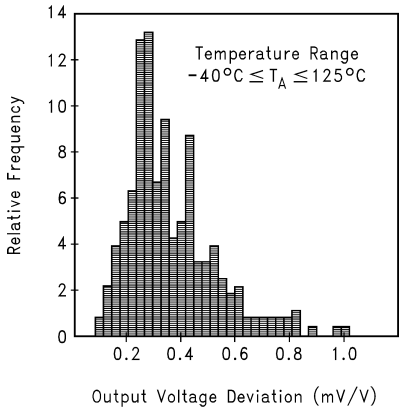

Figure 5. Thermal Hysteresis

6.11.1 Start-Up Characteristics

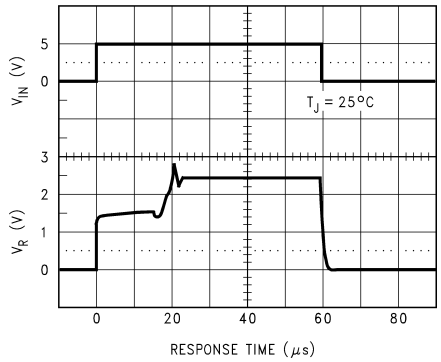

Figure 6. Input Voltage Step Response LM4050-N-2.5

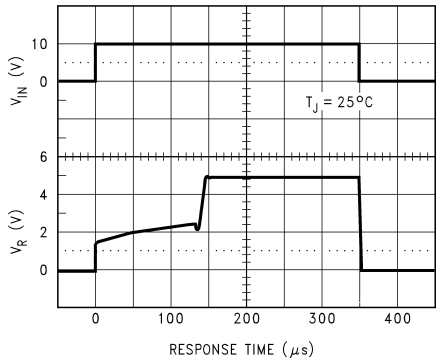

Figure 7. Input Voltage Step Response LM4050-N-5

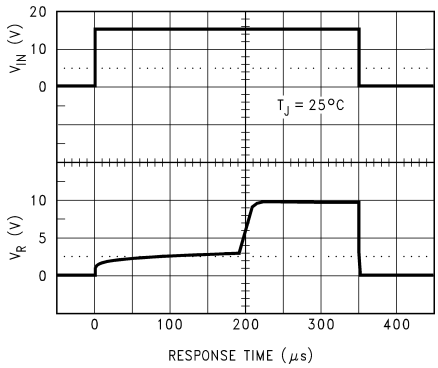

Figure 8. Input Voltage Step Response LM4050-N-10

7 Parameter Measurement Information

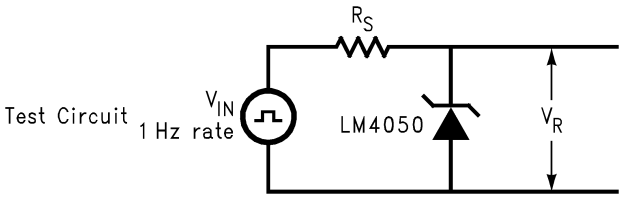

Figure 9. Test Circuit

Copyright © 2000–2015, Texas Instruments Incorporated

8 Detailed Description

8.1 Overview

The LM4050-N device is a precision micropower shunt voltage reference. The part comes in 6 different fixed-output voltage options for space-constrained applications, removing the need for feedback resistors. The voltage tolerance accuracies are ±0.1%, ±0.2%, and ±0.5% for Versions A, B, and C, respectively. The LM4050-N comes in two application versions, Industrial and Extended temperature range, which are operational from –40°C to 85°C and –40°C to 125°C, respectively.

8.2 Functional Block Diagram

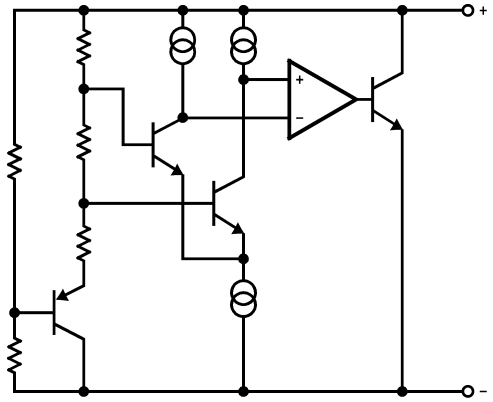

8.3 Feature Description

The LM4050-N behaves as a high-precision Zener diode. The voltage is regulated between its cathode and anode which is dependent on the current being supplied to the cathode. This current is needed for the LM4050-N to regulate within the specified limits. Refer to the minimum and maximum operating requirements for the specific voltage option used. The LM4050-N is internally compensated to be stable without the use of an output capacitor. However, if desired, a bypass capacitor may be used.

8.4 Device Functional Modes

The LM4050-N can only operate in closed loop due to the fact that the feedback resistors are internal to the device. Additionally, the output voltage cannot be adjusted for the same reason. The output voltage is regulated in a closed loop, provided the Rs (see *Functional Block Diagram*) resistor is sized to deliver the current to the cathode within the limits specified for the fixed-voltage version being used.

Copyright © 2000–2015, Texas Instruments Incorporated

9 Application and Implementation

NOTE

Information in the following applications sections is not part of the TI component specification, and TI does not warrant its accuracy or completeness. TI's customers are responsible for determining suitability of components for their purposes. Customers should validate and test their design implementation to confirm system functionality.

9.1 Application Information

The LM4050-N is a precision micropower curvature-corrected bandgap shunt voltage reference. For space critical applications, the LM4050-N is available in the sub-miniature SOT-23 surface-mount package. The LM4050-N has been designed for stable operation without the need of an external capacitor connected between the + pin and the − pin. If, however, a bypass capacitor is used, the LM4050-N remains stable. Reducing design effort is the availability of several fixed reverse breakdown voltages: 2.048 V, 2.5 V, 4.096 V, 5 V, 8.192 V, and 10 V. The minimum operating current increases from 60 µA for the LM4050-N-2.0 to 100 µA for the LM4050-N-10.0. All versions have a maximum operating current of 15 mA.

LM4050-Ns in the SOT-23 packages have a parasitic Schottky diode between pin 2 (−) and pin 3 (Die attach interface contact). Therefore, pin 3 of the SOT-23 package must be left floating or connected to pin 2.

The 4.096-V version allows single 5-V 12-bit ADCs or DACs to operate with an LSB equal to 1 mV. For 12-bit ADCs or DACs that operate on supplies of 10 V or greater, the 8.192-V version gives 2 mV per LSB.

The typical thermal hysteresis specification is defined as the change in 25°C voltage measured after thermal cycling. The device is thermal cycled to temperature –40°C and then measured at 25°C. Next the device is thermal cycled to temperature 125°C and again measured at 25°C. The resulting V_{OUT} delta shift between the 25°C measurements is thermal hysteresis. Thermal hysteresis is common in precision references and is induced by thermal-mechanical package stress. Changes in environmental storage temperature, operating temperature and board mounting temperature are all factors that can contribute to thermal hysteresis.

In a conventional shunt regulator application (Figure 10) , an external series resistor (R_S) is connected between the supply voltage and the LM4050-N. R_S determines the current that flows through the load (I_L) and the LM4050-N (I_Q). Since load current and supply voltage may vary, R_S should be small enough to supply at least the maximum guaranteed I_{RMIN} (spec. table) to the LM4050-N even when the supply voltage is at its minimum and the load current is at its maximum value. When the supply voltage is at its maximum and I_L is at its minimum, R_S should be large enough so that the current flowing through the LM4050-N is less than 15 mA.

R_S is determined by the supply voltage, (V_S), the load and operating current, (I_L and I_Q), and the LM4050-N's reverse breakdown voltage, V_R.

$$R_S = \frac{V_S - V_R}{I_L + I_Q} \tag{1}$$

Copyright © 2000–2015, Texas Instruments Incorporated

9.2 Typical Applications

9.2.1 Shunt Regulator

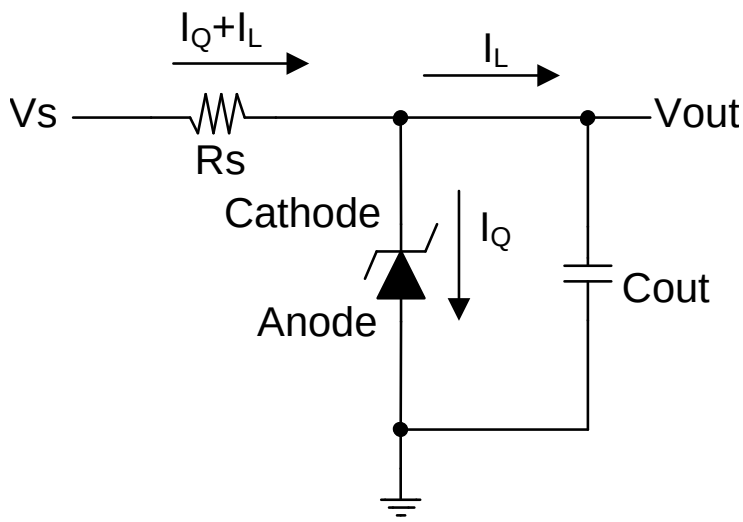

Figure 10. Shunt Regulator Schematic

9.2.1.1 Design Requirements

For this design example, use the parameters listed in Table 1 as the input parameters.

Table 1. Design Parameters

DESIGN PARAMETER	VALUE
Output Voltage	2 V, 2.5 V, 4.1 V, 5 V, 8.2 V, 10 V
Minimum Cathode Current	41 µA, 41 µA, 52 µA, 56 µA, 74 µA, 80 µA (Typical) (Respective to Above field)

9.2.1.2 Detailed Design Procedure

R_S sets the cathode current of the shunt reference. Ensure that this current is greater than the minimum cathode current to ensure regulation and less that the maximum reverse current to prevent overheating of the shunt reference. A suggested good starting value for most designs is from approximately 0.5 mA to 1 mA.

$$I_{RMIN} < \frac{V_s - V_{out}}{R_s} < 0.015A \tag{2}$$

9.2.1.3 Application Curve

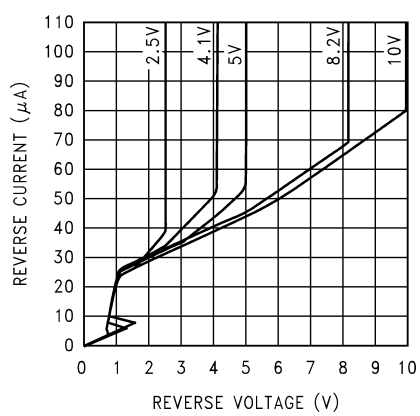

Figure 11. Reverse Characteristics and Minimum Operating Current

9.2.2 Precision Reference for an Analog-to-Digital Converter

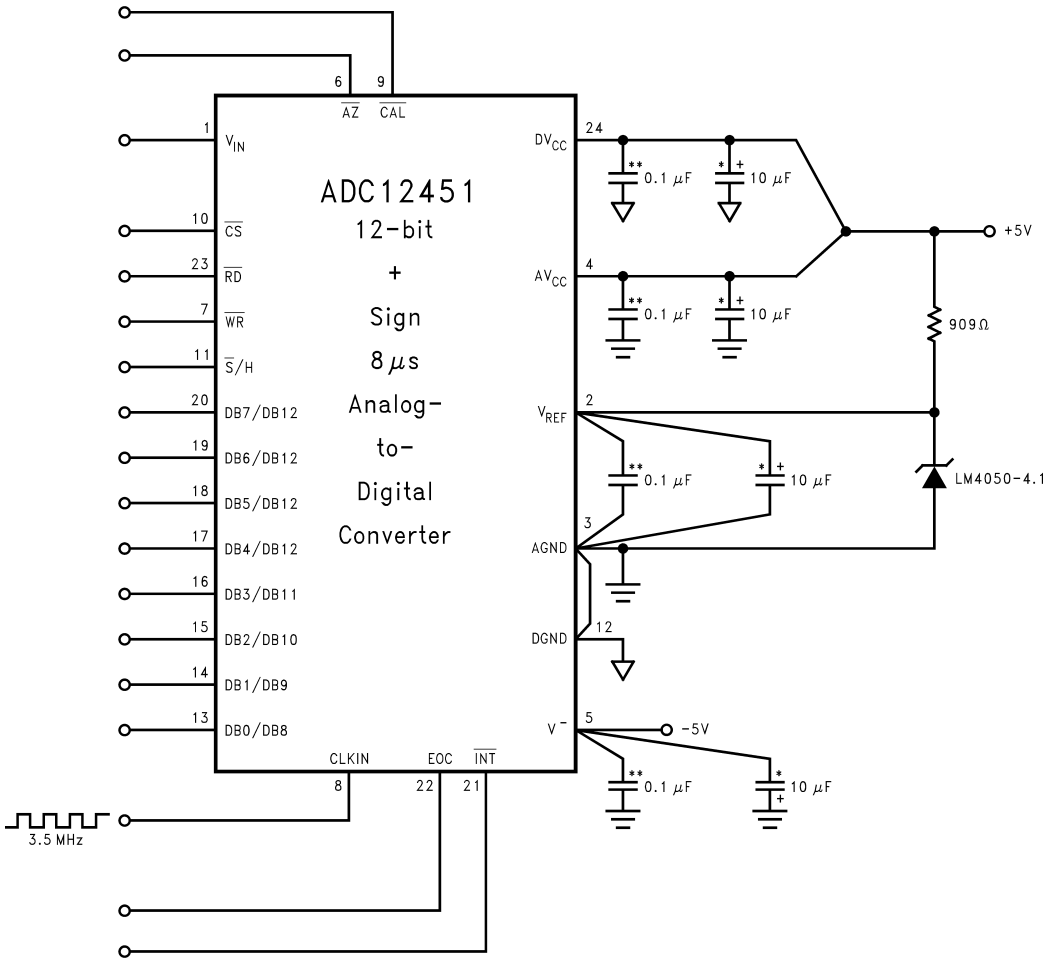

**Ceramic monolithic
*Tantalum

Figure 12. LM4050-N-4.1'S Nominal 4.096 Breakdown Voltage Gives ADC12451 1 MV/LSB

9.2.2.1 Design Requirements

For this design example, use the parameters listed in Table 2 as the input parameters.

Table 2. Design Parameters

DESIGN PARAMETER	VALUE
Output Voltage	4.1 V

9.2.2.2 Detailed Design Procedure

Set I_Q to approximately 1 mA.

$$R_s = \frac{V_s - V_{out}}{I_Q}$$

where

- Rs = 900 Ω, nearest preferred Value = 909 Ω (3)

Copyright © 2000–2015, Texas Instruments Incorporated

9.2.3 V_{OUT} Bounded Amplifier

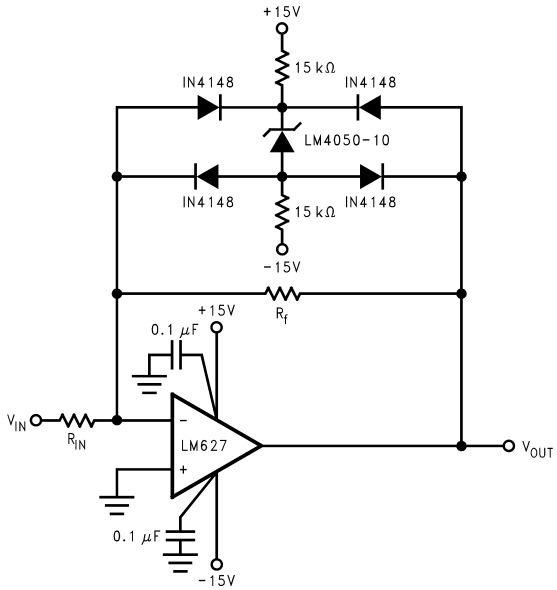

Bounded amplifier reduces saturation-induced delays and can prevent succeeding stage damage. Nominal clamping voltage is ±11.5 V (LM4050-N's reverse breakdown voltage +2 diode V_F).

Figure 13. Bounded Amplifier

9.2.3.1 Design Requirements

The only design requirement is V_{OUT} bounded to ±11.5 V.

9.2.3.2 Detailed Design Procedure

$$V_{bound} = 2 \times V_{wd} + V_{out} \tag{4}$$

$$V_{fwd} = 0.7\ V \tag{5}$$

$$V_{bound} = (2 \times 0.7\ V) + 10\ V \tag{6}$$

Set I_Q to approximately 0.6 mA.

$$R_s = \frac{V_s + |-V_s| - V_{out}}{I_Q} \tag{7}$$

$$R_s = \frac{30\ V - 10\ V}{0.0006A}$$

where

- R_S (total) = 33 kΩ (select 2 × 15 kΩ) (8)

9.2.4 V_{IN} Bounded Amplifier

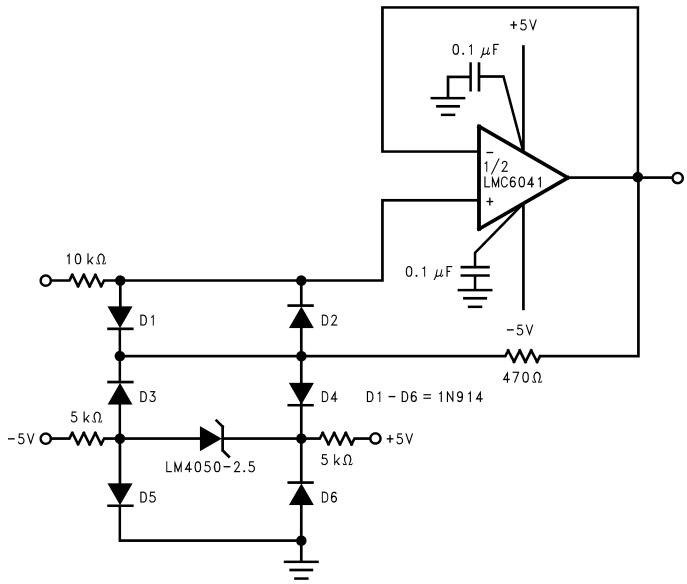

The bounding voltage is ±4 V with the LM4050-N-2.5 (LM4050-N's reverse breakdown voltage + 3 diode V_F).

Figure 14. Protecting Op Amp Input

9.2.4.1 Design Requirements

The only design requirement is V_{IN} bounded to ±4.6 V.

9.2.4.2 Detailed Design Procedure

$$V_{bound} = 3 \times V_{wd} + V_{out} \tag{9}$$

$$V_{fwd} = 0.7\ V \tag{10}$$

$$V_{bound} = (3 \times 0.7\ V) + 2.5\ V \tag{11}$$

Set I_Q to approximately 0.6 mA.

$$R_s = \frac{V_s + |-V_s| - V_{out}}{I_Q} \tag{12}$$

$$R_s = \frac{10\ V - 2.5\ V}{0.0006A}$$

where

- R_S (total) = 12.5 kΩ (select 2 × 5 kΩ) (13)

Copyright © 2000–2015, Texas Instruments Incorporated

9.2.5 ±4.096 Precision Reference

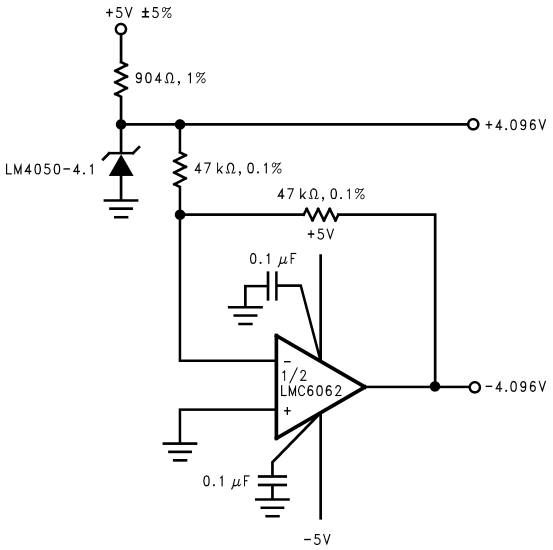

Figure 15. Precision ±4.096v Reference

9.2.5.1 Design Requirements

The only design requirement is a positive and negative reference generated from a positive reference, ±4.096 V.

9.2.5.2 Detailed Design Procedure

Follow the design procedure set in *Precision Reference for an Analog-to-Digital Converter*.

9.2.6 ±1-mA Precision Current Sources

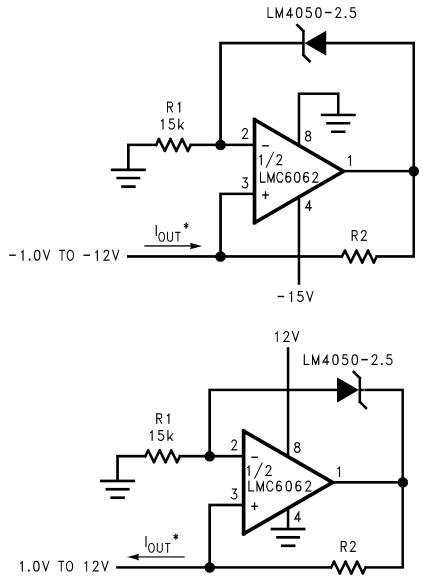

$$I_{out} = \frac{V_{out}}{R2}$$

Figure 16. Precision 1-µA to 1-mA Current Source (±)

9.2.6.1 Design Requirements

The only design requirement is a dual ±1-mA current source.

9.2.6.2 Detailed Design Procedure

Set worse-case cathode current to 0.6 mA.

$$V_{out_{opampmax}} = 12\ V \tag{14}$$

$$R1 = \frac{Vout_{Opampmax} - Vout}{I_Q} \tag{15}$$

$$R1 = \frac{12\ V - 2.5\ V}{0.0006A} \tag{16}$$

$$R1 = 1.583 \times 10^4\ \Omega \tag{17}$$

$$I_{out} = \frac{V_{out}}{R2} \tag{18}$$

Copyright © 2000–2015, Texas Instruments Incorporated

10 Power Supply Recommendations

Noise on the power supply input to R_S can affect output noise performance. Noise performance can be reduced by using an optional bypass capacitor at the input side of R_S and Ground. TI recommends a 0.1-µF ceramic capacitor or higher.

11 Layout

11.1 Layout Guidelines

Place R_S as close to the cathode as possible. If an input and output capacitor is used, place this as close to the reference as possible.

11.2 Layout Example

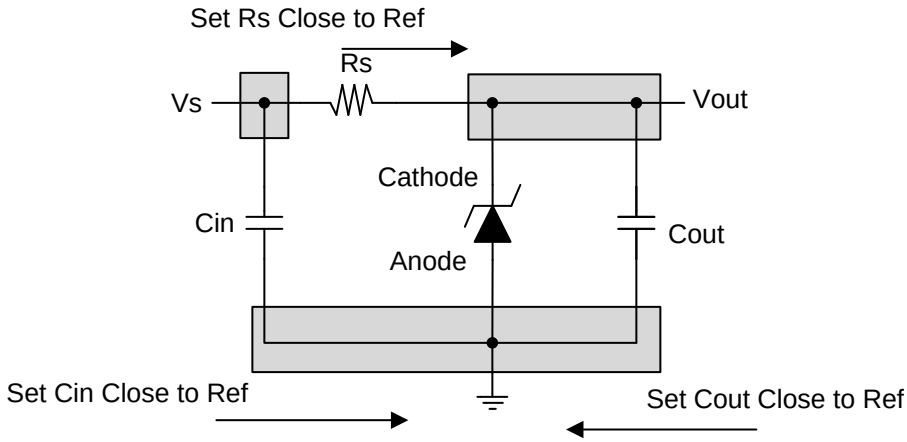

Figure 17. Layout Recommendation

12 Device and Documentation Support

12.1 Related Links

The table below lists quick access links. Categories include technical documents, support and community resources, tools and software, and quick access to sample or buy.

Table 3. Related Links

PARTS	PRODUCT FOLDER	SAMPLE & BUY	TECHNICAL DOCUMENTS	TOOLS & SOFTWARE	SUPPORT & COMMUNITY
LM4050-N	Click here	Click here	Click here	Click here	Click here
LM4050-N-Q1	Click here	Click here	Click here	Click here	Click here

12.2 Community Resources

The following links connect to TI community resources. Linked contents are provided "AS IS" by the respective contributors. They do not constitute TI specifications and do not necessarily reflect TI's views; see TI's Terms of Use.

TI E2E™ Online Community ***TI's Engineer-to-Engineer (E2E) Community.*** Created to foster collaboration among engineers. At e2e.ti.com, you can ask questions, share knowledge, explore ideas and help solve problems with fellow engineers.

Design Support ***TI's Design Support*** Quickly find helpful E2E forums along with design support tools and contact information for technical support.

12.3 Trademarks

E2E is a trademark of Texas Instruments.
All other trademarks are the property of their respective owners.

12.4 Electrostatic Discharge Caution

These devices have limited built-in ESD protection. The leads should be shorted together or the device placed in conductive foam during storage or handling to prevent electrostatic damage to the MOS gates.

12.5 Glossary

SLYZ022 — *TI Glossary*.

This glossary lists and explains terms, acronyms, and definitions.

13 Mechanical, Packaging, and Orderable Information

The following pages include mechanical, packaging, and orderable information. This information is the most current data available for the designated devices. This data is subject to change without notice and revision of this document. For browser-based versions of this data sheet, refer to the left-hand navigation.

Copyright © 2000–2015, Texas Instruments Incorporated

PACKAGING INFORMATION

Orderable Device	Status (1)	Package Type	Package Drawing	Pins	Package Qty	Eco Plan (2)	Lead finish/ Ball material (6)	MSL Peak Temp (3)	Op Temp (°C)	Device Marking (4/5)	Samples
LM4050AEM3-10/NOPB	ACTIVE	SOT-23	DBZ	3	1000	RoHS & Green	SN	Level-1-260C-UNLIM	-40 to 125	RGA	Samples
LM4050AEM3-2.0/NOPB	ACTIVE	SOT-23	DBZ	3	1000	RoHS & Green	SN	Level-1-260C-UNLIM	-40 to 125	RNA	Samples
LM4050AEM3-2.5	NRND	SOT-23	DBZ	3	1000	Non-RoHS & Green	Call TI	Level-1-260C-UNLIM	-40 to 125	RCA	
LM4050AEM3-2.5/NOPB	ACTIVE	SOT-23	DBZ	3	1000	RoHS & Green	SN	Level-1-260C-UNLIM	-40 to 125	RCA	Samples
LM4050AEM3-5.0	NRND	SOT-23	DBZ	3	1000	Non-RoHS & Green	Call TI	Level-1-260C-UNLIM	-40 to 125	REA	
LM4050AEM3-5.0/NOPB	ACTIVE	SOT-23	DBZ	3	1000	RoHS & Green	SN	Level-1-260C-UNLIM	-40 to 125	REA	Samples
LM4050AEM3-8.2/NOPB	ACTIVE	SOT-23	DBZ	3	1000	RoHS & Green	SN	Level-1-260C-UNLIM	-40 to 125	RFA	Samples
LM4050AEM3X-10/NOPB	ACTIVE	SOT-23	DBZ	3	3000	RoHS & Green	SN	Level-1-260C-UNLIM	-40 to 125	RGA	Samples
LM4050AEM3X-2.5/NOPB	ACTIVE	SOT-23	DBZ	3	3000	RoHS & Green	SN	Level-1-260C-UNLIM	-40 to 125	RCA	Samples
LM4050AEM3X-5.0/NOPB	ACTIVE	SOT-23	DBZ	3	3000	RoHS & Green	SN	Level-1-260C-UNLIM	-40 to 125	REA	Samples
LM4050AIM3-10/NOPB	ACTIVE	SOT-23	DBZ	3	1000	RoHS & Green	SN	Level-1-260C-UNLIM	-40 to 85	RGA	Samples
LM4050AIM3-2.5	NRND	SOT-23	DBZ	3	1000	Non-RoHS & Green	Call TI	Level-1-260C-UNLIM	-40 to 85	RCA	
LM4050AIM3-2.5/NOPB	ACTIVE	SOT-23	DBZ	3	1000	RoHS & Green	SN	Level-1-260C-UNLIM	-40 to 85	RCA	Samples
LM4050AIM3-4.1	NRND	SOT-23	DBZ	3	1000	Non-RoHS & Green	Call TI	Level-1-260C-UNLIM	-40 to 85	RDA	
LM4050AIM3-4.1/NOPB	ACTIVE	SOT-23	DBZ	3	1000	RoHS & Green	SN	Level-1-260C-UNLIM	-40 to 85	RDA	Samples
LM4050AIM3-5.0	NRND	SOT-23	DBZ	3	1000	Non-RoHS & Green	Call TI	Level-1-260C-UNLIM	-40 to 85	REA	
LM4050AIM3-5.0/NOPB	ACTIVE	SOT-23	DBZ	3	1000	RoHS & Green	SN	Level-1-260C-UNLIM	-40 to 85	REA	Samples
LM4050AIM3X-2.5/NOPB	ACTIVE	SOT-23	DBZ	3	3000	RoHS & Green	SN	Level-1-260C-UNLIM	-40 to 85	RCA	Samples
LM4050AIM3X-4.1/NOPB	ACTIVE	SOT-23	DBZ	3	3000	RoHS & Green	SN	Level-1-260C-UNLIM	-40 to 85	RDA	Samples

Orderable Device	Status (1)	Package Type	Package Drawing	Pins	Package Qty	Eco Plan (2)	Lead finish/ Ball material (6)	MSL Peak Temp (3)	Op Temp (°C)	Device Marking (4/5)	Samples
LM4050AIM3X-5.0/NOPB	ACTIVE	SOT-23	DBZ	3	3000	RoHS & Green	SN	Level-1-260C-UNLIM	-40 to 85	REA	Samples
LM4050BEM3-10/NOPB	ACTIVE	SOT-23	DBZ	3	1000	RoHS & Green	SN	Level-1-260C-UNLIM	-40 to 125	RGB	Samples
LM4050BEM3-2.5	NRND	SOT-23	DBZ	3	1000	Non-RoHS & Green	Call TI	Level-1-260C-UNLIM	-40 to 125	RCB	
LM4050BEM3-2.5/NOPB	ACTIVE	SOT-23	DBZ	3	1000	RoHS & Green	SN	Level-1-260C-UNLIM	-40 to 125	RCB	Samples
LM4050BEM3-4.1/NOPB	ACTIVE	SOT-23	DBZ	3	1000	RoHS & Green	SN	Level-1-260C-UNLIM	-40 to 125	RDB	Samples
LM4050BEM3-5.0	NRND	SOT-23	DBZ	3	1000	Non-RoHS & Green	Call TI	Level-1-260C-UNLIM	-40 to 125	REB	
LM4050BEM3-5.0/NOPB	ACTIVE	SOT-23	DBZ	3	1000	RoHS & Green	SN	Level-1-260C-UNLIM	-40 to 125	REB	Samples
LM4050BEM3-8.2/NOPB	ACTIVE	SOT-23	DBZ	3	1000	RoHS & Green	SN	Level-1-260C-UNLIM	-40 to 125	RFB	Samples
LM4050BEM3X-10/NOPB	ACTIVE	SOT-23	DBZ	3	3000	RoHS & Green	SN	Level-1-260C-UNLIM	-40 to 125	RGB	Samples
LM4050BEM3X-2.5/NOPB	ACTIVE	SOT-23	DBZ	3	3000	RoHS & Green	SN	Level-1-260C-UNLIM	-40 to 125	RCB	Samples
LM4050BEM3X-5.0/NOPB	ACTIVE	SOT-23	DBZ	3	3000	RoHS & Green	SN	Level-1-260C-UNLIM	-40 to 125	REB	Samples
LM4050BIM3-10/NOPB	ACTIVE	SOT-23	DBZ	3	1000	RoHS & Green	SN	Level-1-260C-UNLIM	-40 to 85	RGB	Samples
LM4050BIM3-2.5	NRND	SOT-23	DBZ	3	1000	Non-RoHS & Green	Call TI	Level-1-260C-UNLIM	-40 to 85	RCB	
LM4050BIM3-2.5/NOPB	ACTIVE	SOT-23	DBZ	3	1000	RoHS & Green	SN	Level-1-260C-UNLIM	-40 to 85	RCB	Samples
LM4050BIM3-4.1/NOPB	ACTIVE	SOT-23	DBZ	3	1000	RoHS & Green	SN	Level-1-260C-UNLIM	-40 to 85	RDB	Samples
LM4050BIM3-5.0	NRND	SOT-23	DBZ	3	1000	Non-RoHS & Green	Call TI	Level-1-260C-UNLIM	-40 to 85	REB	
LM4050BIM3-5.0/NOPB	ACTIVE	SOT-23	DBZ	3	1000	RoHS & Green	SN	Level-1-260C-UNLIM	-40 to 85	REB	Samples
LM4050BIM3X-2.0/NOPB	ACTIVE	SOT-23	DBZ	3	3000	RoHS & Green	SN	Level-1-260C-UNLIM	-40 to 85	RNB	Samples
LM4050BIM3X-2.5/NOPB	ACTIVE	SOT-23	DBZ	3	3000	RoHS & Green	SN	Level-1-260C-UNLIM	-40 to 85	RCB	Samples
LM4050BIM3X-4.1/NOPB	ACTIVE	SOT-23	DBZ	3	3000	RoHS & Green	SN	Level-1-260C-UNLIM	-40 to 85	RDB	Samples

Orderable Device	Status (1)	Package Type	Package Drawing	Pins	Package Qty	Eco Plan (2)	Lead finish/ Ball material (6)	MSL Peak Temp (3)	Op Temp (°C)	Device Marking (4/5)	Samples
LM4050BIM3X-5.0/NOPB	ACTIVE	SOT-23	DBZ	3	3000	RoHS & Green	SN	Level-1-260C-UNLIM	-40 to 85	REB	Samples
LM4050CEM3-10/NOPB	ACTIVE	SOT-23	DBZ	3	1000	RoHS & Green	SN	Level-1-260C-UNLIM		RGC	Samples
LM4050CEM3-2.5	NRND	SOT-23	DBZ	3	1000	Non-RoHS & Green	Call TI	Level-1-260C-UNLIM	-40 to 125	RCC	
LM4050CEM3-2.5/NOPB	ACTIVE	SOT-23	DBZ	3	1000	RoHS & Green	SN	Level-1-260C-UNLIM	-40 to 125	RCC	Samples
LM4050CEM3-5.0	NRND	SOT-23	DBZ	3	1000	Non-RoHS & Green	Call TI	Level-1-260C-UNLIM		REC	
LM4050CEM3-5.0/NOPB	ACTIVE	SOT-23	DBZ	3	1000	RoHS & Green	SN	Level-1-260C-UNLIM		REC	Samples
LM4050CEM3X-2.5/NOPB	ACTIVE	SOT-23	DBZ	3	3000	RoHS & Green	SN	Level-1-260C-UNLIM	-40 to 125	RCC	Samples
LM4050CEM3X-5.0/NOPB	ACTIVE	SOT-23	DBZ	3	3000	RoHS & Green	SN	Level-1-260C-UNLIM		REC	Samples
LM4050CIM3-10/NOPB	ACTIVE	SOT-23	DBZ	3	1000	RoHS & Green	SN	Level-1-260C-UNLIM	-40 to 85	RGC	Samples
LM4050CIM3-2.5/NOPB	ACTIVE	SOT-23	DBZ	3	1000	RoHS & Green	SN	Level-1-260C-UNLIM	-40 to 85	RCC	Samples
LM4050CIM3-4.1/NOPB	ACTIVE	SOT-23	DBZ	3	1000	RoHS & Green	SN	Level-1-260C-UNLIM	-40 to 85	RDC	Samples
LM4050CIM3-5.0	NRND	SOT-23	DBZ	3	1000	Non-RoHS & Green	Call TI	Level-1-260C-UNLIM	-40 to 85	REC	
LM4050CIM3-5.0/NOPB	ACTIVE	SOT-23	DBZ	3	1000	RoHS & Green	SN	Level-1-260C-UNLIM	-40 to 85	REC	Samples
LM4050CIM3X-2.0/NOPB	ACTIVE	SOT-23	DBZ	3	3000	RoHS & Green	SN	Level-1-260C-UNLIM	-40 to 85	RNC	Samples
LM4050CIM3X-2.5/NOPB	ACTIVE	SOT-23	DBZ	3	3000	RoHS & Green	SN	Level-1-260C-UNLIM	-40 to 85	RCC	Samples
LM4050CIM3X-4.1/NOPB	ACTIVE	SOT-23	DBZ	3	3000	RoHS & Green	SN	Level-1-260C-UNLIM	-40 to 85	RDC	Samples
LM4050CIM3X-5.0/NOPB	ACTIVE	SOT-23	DBZ	3	3000	RoHS & Green	SN	Level-1-260C-UNLIM	-40 to 85	REC	Samples
LM4050QAEM3-10/NOPB	ACTIVE	SOT-23	DBZ	3	1000	RoHS & Green	SN	Level-1-260C-UNLIM	-40 to 125	RYA	Samples
LM4050QAEM3-2.0/NOPB	ACTIVE	SOT-23	DBZ	3	1000	RoHS & Green	SN	Level-1-260C-UNLIM	-40 to 125	RSA	Samples
LM4050QAEM3-2.5/NOPB	ACTIVE	SOT-23	DBZ	3	1000	RoHS & Green	SN	Level-1-260C-UNLIM	-40 to 125	RTA	Samples

Orderable Device	Status (1)	Package Type	Package Drawing	Pins	Package Qty	Eco Plan (2)	Lead finish/ Ball material (6)	MSL Peak Temp (3)	Op Temp (°C)	Device Marking (4/5)	Samples
LM4050QAEM3-4.1/NOPB	ACTIVE	SOT-23	DBZ	3	1000	RoHS & Green	SN	Level-1-260C-UNLIM	-40 to 125	RUA	Samples
LM4050QAEM3-5.0/NOPB	ACTIVE	SOT-23	DBZ	3	1000	RoHS & Green	SN	Level-1-260C-UNLIM	-40 to 125	RVA	Samples
LM4050QAEM3-8.2/NOPB	ACTIVE	SOT-23	DBZ	3	1000	RoHS & Green	SN	Level-1-260C-UNLIM	-40 to 125	RXA	Samples
LM4050QAEM3X10/NOPB	ACTIVE	SOT-23	DBZ	3	3000	RoHS & Green	SN	Level-1-260C-UNLIM	-40 to 125	RYA	Samples
LM4050QAEM3X2.0/NOPB	ACTIVE	SOT-23	DBZ	3	3000	RoHS & Green	SN	Level-1-260C-UNLIM	-40 to 125	RSA	Samples
LM4050QAEM3X2.5/NOPB	ACTIVE	SOT-23	DBZ	3	3000	RoHS & Green	SN	Level-1-260C-UNLIM	-40 to 125	RTA	Samples
LM4050QAEM3X4.1/NOPB	ACTIVE	SOT-23	DBZ	3	3000	RoHS & Green	SN	Level-1-260C-UNLIM	-40 to 125	RUA	Samples
LM4050QAEM3X5.0/NOPB	ACTIVE	SOT-23	DBZ	3	3000	RoHS & Green	SN	Level-1-260C-UNLIM	-40 to 125	RVA	Samples
LM4050QAEM3X8.2/NOPB	ACTIVE	SOT-23	DBZ	3	3000	RoHS & Green	SN	Level-1-260C-UNLIM	-40 to 125	RXA	Samples
LM4050QAIM3-10/NOPB	ACTIVE	SOT-23	DBZ	3	1000	RoHS & Green	SN	Level-1-260C-UNLIM	-40 to 85	RYA	Samples
LM4050QAIM3-2.0/NOPB	ACTIVE	SOT-23	DBZ	3	1000	RoHS & Green	SN	Level-1-260C-UNLIM	-40 to 85	RSA	Samples
LM4050QAIM3-2.5/NOPB	ACTIVE	SOT-23	DBZ	3	1000	RoHS & Green	SN	Level-1-260C-UNLIM	-40 to 85	RTA	Samples
LM4050QAIM3-4.1/NOPB	ACTIVE	SOT-23	DBZ	3	1000	RoHS & Green	SN	Level-1-260C-UNLIM	-40 to 85	RUA	Samples
LM4050QAIM3-8.2/NOPB	ACTIVE	SOT-23	DBZ	3	1000	RoHS & Green	SN	Level-1-260C-UNLIM	-40 to 85	RXA	Samples
LM4050QAIM3X4.1/NOPB	ACTIVE	SOT-23	DBZ	3	3000	RoHS & Green	SN	Level-1-260C-UNLIM	-40 to 85	RUA	Samples
LM4050QBEM3-10/NOPB	ACTIVE	SOT-23	DBZ	3	1000	RoHS & Green	SN	Level-1-260C-UNLIM	-40 to 125	RYB	Samples
LM4050QBEM3-2.0/NOPB	ACTIVE	SOT-23	DBZ	3	1000	RoHS & Green	SN	Level-1-260C-UNLIM	-40 to 125	RSB	Samples
LM4050QBEM3-2.5/NOPB	ACTIVE	SOT-23	DBZ	3	1000	RoHS & Green	SN	Level-1-260C-UNLIM	-40 to 125	RTB	Samples
LM4050QBEM3-4.1/NOPB	ACTIVE	SOT-23	DBZ	3	1000	RoHS & Green	SN	Level-1-260C-UNLIM	-40 to 125	RUB	Samples
LM4050QBEM3-5.0/NOPB	ACTIVE	SOT-23	DBZ	3	1000	RoHS & Green	SN	Level-1-260C-UNLIM	-40 to 125	RVB	Samples
LM4050QBEM3-8.2/NOPB	ACTIVE	SOT-23	DBZ	3	1000	RoHS & Green	SN	Level-1-260C-UNLIM	-40 to 125	RXB	Samples

Orderable Device	Status (1)	Package Type	Package Drawing	Pins	Package Qty	Eco Plan (2)	Lead finish/ Ball material (6)	MSL Peak Temp (3)	Op Temp (°C)	Device Marking (4/5)	Samples
LM4050QBEM3X10/NOPB	ACTIVE	SOT-23	DBZ	3	3000	RoHS & Green	SN	Level-1-260C-UNLIM	-40 to 125	RYB	Samples
LM4050QBEM3X2.0/NOPB	ACTIVE	SOT-23	DBZ	3	3000	RoHS & Green	SN	Level-1-260C-UNLIM	-40 to 125	RSB	Samples
LM4050QBEM3X2.5/NOPB	ACTIVE	SOT-23	DBZ	3	3000	RoHS & Green	SN	Level-1-260C-UNLIM	-40 to 125	RTB	Samples
LM4050QBEM3X4.1/NOPB	ACTIVE	SOT-23	DBZ	3	3000	RoHS & Green	SN	Level-1-260C-UNLIM	-40 to 125	RUB	Samples
LM4050QBEM3X5.0/NOPB	ACTIVE	SOT-23	DBZ	3	3000	RoHS & Green	SN	Level-1-260C-UNLIM	-40 to 125	RVB	Samples
LM4050QBEM3X8.2/NOPB	ACTIVE	SOT-23	DBZ	3	3000	RoHS & Green	SN	Level-1-260C-UNLIM	-40 to 125	RXB	Samples
LM4050QBIM3-10/NOPB	ACTIVE	SOT-23	DBZ	3	1000	RoHS & Green	SN	Level-1-260C-UNLIM	-40 to 85	RYB	Samples
LM4050QBIM3-2.0/NOPB	ACTIVE	SOT-23	DBZ	3	1000	RoHS & Green	SN	Level-1-260C-UNLIM	-40 to 85	RSB	Samples
LM4050QBIM3-2.5/NOPB	ACTIVE	SOT-23	DBZ	3	1000	RoHS & Green	SN	Level-1-260C-UNLIM	-40 to 85	RTB	Samples
LM4050QBIM3-4.1/NOPB	ACTIVE	SOT-23	DBZ	3	1000	RoHS & Green	SN	Level-1-260C-UNLIM	-40 to 85	RUB	Samples
LM4050QBIM3-5.0/NOPB	ACTIVE	SOT-23	DBZ	3	1000	RoHS & Green	SN	Level-1-260C-UNLIM	-40 to 85	RVB	Samples
LM4050QBIM3-8.2/NOPB	ACTIVE	SOT-23	DBZ	3	1000	RoHS & Green	SN	Level-1-260C-UNLIM	-40 to 85	RXB	Samples
LM4050QCEM3-10/NOPB	ACTIVE	SOT-23	DBZ	3	1000	RoHS & Green	SN	Level-1-260C-UNLIM	-40 to 125	RYC	Samples
LM4050QCEM3-2.0/NOPB	ACTIVE	SOT-23	DBZ	3	1000	RoHS & Green	SN	Level-1-260C-UNLIM	-40 to 125	RSC	Samples
LM4050QCEM3-2.5/NOPB	ACTIVE	SOT-23	DBZ	3	1000	RoHS & Green	SN	Level-1-260C-UNLIM	-40 to 125	RTC	Samples
LM4050QCEM3-4.1/NOPB	ACTIVE	SOT-23	DBZ	3	1000	RoHS & Green	SN	Level-1-260C-UNLIM	-40 to 125	RUC	Samples
LM4050QCEM3-5.0/NOPB	ACTIVE	SOT-23	DBZ	3	1000	RoHS & Green	SN	Level-1-260C-UNLIM	-40 to 125	RVC	Samples
LM4050QCEM3-8.2/NOPB	ACTIVE	SOT-23	DBZ	3	1000	RoHS & Green	SN	Level-1-260C-UNLIM	-40 to 125	RXC	Samples
LM4050QCEM3X10/NOPB	ACTIVE	SOT-23	DBZ	3	3000	RoHS & Green	SN	Level-1-260C-UNLIM	-40 to 125	RYC	Samples
LM4050QCEM3X2.0/NOPB	ACTIVE	SOT-23	DBZ	3	3000	RoHS & Green	SN	Level-1-260C-UNLIM	-40 to 125	RSC	Samples
LM4050QCEM3X2.5/NOPB	ACTIVE	SOT-23	DBZ	3	3000	RoHS & Green	SN	Level-1-260C-UNLIM	-40 to 125	RTC	Samples

Orderable Device	Status (1)	Package Type	Package Drawing	Pins	Package Qty	Eco Plan (2)	Lead finish/ Ball material (6)	MSL Peak Temp (3)	Op Temp (°C)	Device Marking (4/5)	Samples
LM4050QCEM3X4.1/NOPB	ACTIVE	SOT-23	DBZ	3	3000	RoHS & Green	SN	Level-1-260C-UNLIM	-40 to 125	RUC	Samples
LM4050QCEM3X5.0/NOPB	ACTIVE	SOT-23	DBZ	3	3000	RoHS & Green	SN	Level-1-260C-UNLIM	-40 to 125	RVC	Samples
LM4050QCEM3X8.2/NOPB	ACTIVE	SOT-23	DBZ	3	3000	RoHS & Green	SN	Level-1-260C-UNLIM	-40 to 125	RXC	Samples
LM4050QCIM3-2.0/NOPB	ACTIVE	SOT-23	DBZ	3	1000	RoHS & Green	SN	Level-1-260C-UNLIM	-40 to 85	RSC	Samples
LM4050QCIM3-4.1/NOPB	ACTIVE	SOT-23	DBZ	3	1000	RoHS & Green	SN	Level-1-260C-UNLIM	-40 to 85	RUC	Samples
LM4050QCIM3-5.0/NOPB	ACTIVE	SOT-23	DBZ	3	1000	RoHS & Green	SN	Level-1-260C-UNLIM	-40 to 85	RVC	Samples

(1) The marketing status values are defined as follows:
ACTIVE: Product device recommended for new designs.
LIFEBUY: TI has announced that the device will be discontinued, and a lifetime-buy period is in effect.
NRND: Not recommended for new designs. Device is in production to support existing customers, but TI does not recommend using this part in a new design.
PREVIEW: Device has been announced but is not in production. Samples may or may not be available.
OBSOLETE: TI has discontinued the production of the device.

(2) **RoHS:** TI defines "RoHS" to mean semiconductor products that are compliant with the current EU RoHS requirements for all 10 RoHS substances, including the requirement that RoHS substance do not exceed 0.1% by weight in homogeneous materials. Where designed to be soldered at high temperatures, "RoHS" products are suitable for use in specified lead-free processes. TI may reference these types of products as "Pb-Free".
RoHS Exempt: TI defines "RoHS Exempt" to mean products that contain lead but are compliant with EU RoHS pursuant to a specific EU RoHS exemption.
Green: TI defines "Green" to mean the content of Chlorine (Cl) and Bromine (Br) based flame retardants meet JS709B low halogen requirements of <=1000ppm threshold. Antimony trioxide based flame retardants must also meet the <=1000ppm threshold requirement.

(3) MSL, Peak Temp. - The Moisture Sensitivity Level rating according to the JEDEC industry standard classifications, and peak solder temperature.

(4) There may be additional marking, which relates to the logo, the lot trace code information, or the environmental category on the device.

(5) Multiple Device Markings will be inside parentheses. Only one Device Marking contained in parentheses and separated by a "~" will appear on a device. If a line is indented then it is a continuation of the previous line and the two combined represent the entire Device Marking for that device.

(6) Lead finish/Ball material - Orderable Devices may have multiple material finish options. Finish options are separated by a vertical ruled line. Lead finish/Ball material values may wrap to two lines if the finish value exceeds the maximum column width.

Important Information and Disclaimer: The information provided on this page represents TI's knowledge and belief as of the date that it is provided. TI bases its knowledge and belief on information provided by third parties, and makes no representation or warranty as to the accuracy of such information. Efforts are underway to better integrate information from third parties. TI has taken and continues to take reasonable steps to provide representative and accurate information but may not have conducted destructive testing or chemical analysis on incoming materials and chemicals. TI and TI suppliers consider certain information to be proprietary, and thus CAS numbers and other limited information may not be available for release.

In no event shall TI's liability arising out of such information exceed the total purchase price of the TI part(s) at issue in this document sold by TI to Customer on an annual basis.

OTHER QUALIFIED VERSIONS OF LM4050-N, LM4050-N-Q1 :

- Catalog : LM4050-N
- Automotive : LM4050-N-Q1

NOTE: Qualified Version Definitions:

- Catalog - TI's standard catalog product
- Automotive - Q100 devices qualified for high-reliability automotive applications targeting zero defects

TAPE AND REEL INFORMATION

REEL DIMENSIONS

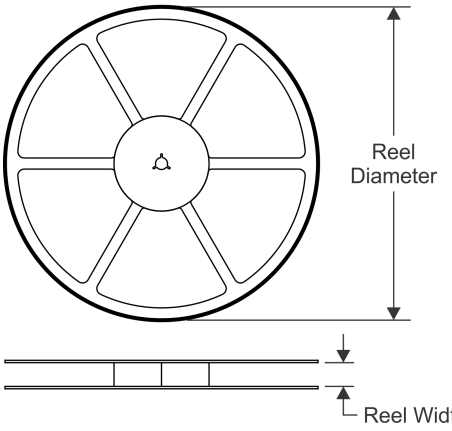

TAPE DIMENSIONS

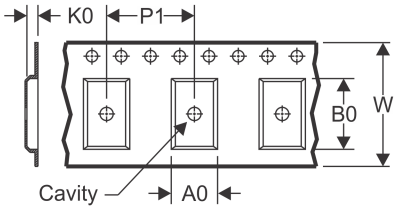

A0	Dimension designed to accommodate the component width
B0	Dimension designed to accommodate the component length
K0	Dimension designed to accommodate the component thickness
W	Overall width of the carrier tape
P1	Pitch between successive cavity centers

QUADRANT ASSIGNMENTS FOR PIN 1 ORIENTATION IN TAPE

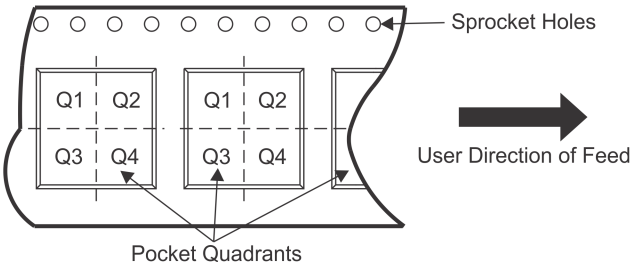

*All dimensions are nominal

Device	Package Type	Package Drawing	Pins	SPQ	Reel Diameter (mm)	Reel Width W1 (mm)	A0 (mm)	B0 (mm)	K0 (mm)	P1 (mm)	W (mm)	Pin1 Quadrant
LM4050AEM3-10/NOPB	SOT-23	DBZ	3	1000	178.0	8.4	3.3	2.9	1.22	4.0	8.0	Q3
LM4050AEM3-2.0/NOPB	SOT-23	DBZ	3	1000	178.0	8.4	3.3	2.9	1.22	4.0	8.0	Q3
LM4050AEM3-2.5	SOT-23	DBZ	3	1000	178.0	8.4	3.3	2.9	1.22	4.0	8.0	Q3
LM4050AEM3-2.5/NOPB	SOT-23	DBZ	3	1000	178.0	8.4	3.3	2.9	1.22	4.0	8.0	Q3
LM4050AEM3-5.0	SOT-23	DBZ	3	1000	178.0	8.4	3.3	2.9	1.22	4.0	8.0	Q3
LM4050AEM3-5.0/NOPB	SOT-23	DBZ	3	1000	178.0	8.4	3.3	2.9	1.22	4.0	8.0	Q3
LM4050AEM3-8.2/NOPB	SOT-23	DBZ	3	1000	178.0	8.4	3.3	2.9	1.22	4.0	8.0	Q3
LM4050AEM3X-10/NOPB	SOT-23	DBZ	3	3000	178.0	8.4	3.3	2.9	1.22	4.0	8.0	Q3
LM4050AEM3X-2.5/NOPB	SOT-23	DBZ	3	3000	178.0	8.4	3.3	2.9	1.22	4.0	8.0	Q3
LM4050AEM3X-5.0/NOPB	SOT-23	DBZ	3	3000	178.0	8.4	3.3	2.9	1.22	4.0	8.0	Q3
LM4050AIM3-10/NOPB	SOT-23	DBZ	3	1000	178.0	8.4	3.3	2.9	1.22	4.0	8.0	Q3
LM4050AIM3-2.5	SOT-23	DBZ	3	1000	178.0	8.4	3.3	2.9	1.22	4.0	8.0	Q3
LM4050AIM3-2.5/NOPB	SOT-23	DBZ	3	1000	178.0	8.4	3.3	2.9	1.22	4.0	8.0	Q3
LM4050AIM3-4.1	SOT-23	DBZ	3	1000	178.0	8.4	3.3	2.9	1.22	4.0	8.0	Q3
LM4050AIM3-4.1/NOPB	SOT-23	DBZ	3	1000	178.0	8.4	3.3	2.9	1.22	4.0	8.0	Q3
LM4050AIM3-5.0	SOT-23	DBZ	3	1000	178.0	8.4	3.3	2.9	1.22	4.0	8.0	Q3
LM4050AIM3-5.0/NOPB	SOT-23	DBZ	3	1000	178.0	8.4	3.3	2.9	1.22	4.0	8.0	Q3
LM4050AIM3X-2.5/NOPB	SOT-23	DBZ	3	3000	178.0	8.4	3.3	2.9	1.22	4.0	8.0	Q3

Device	Package Type	Package Drawing	Pins	SPQ	Reel Diameter (mm)	Reel Width W1 (mm)	A0 (mm)	B0 (mm)	K0 (mm)	P1 (mm)	W (mm)	Pin1 Quadrant
LM4050AIM3X-4.1/NOPB	SOT-23	DBZ	3	3000	178.0	8.4	3.3	2.9	1.22	4.0	8.0	Q3
LM4050AIM3X-5.0/NOPB	SOT-23	DBZ	3	3000	178.0	8.4	3.3	2.9	1.22	4.0	8.0	Q3
LM4050BEM3-10/NOPB	SOT-23	DBZ	3	1000	178.0	8.4	3.3	2.9	1.22	4.0	8.0	Q3
LM4050BEM3-2.5	SOT-23	DBZ	3	1000	178.0	8.4	3.3	2.9	1.22	4.0	8.0	Q3
LM4050BEM3-2.5/NOPB	SOT-23	DBZ	3	1000	178.0	8.4	3.3	2.9	1.22	4.0	8.0	Q3
LM4050BEM3-4.1/NOPB	SOT-23	DBZ	3	1000	178.0	8.4	3.3	2.9	1.22	4.0	8.0	Q3
LM4050BEM3-5.0	SOT-23	DBZ	3	1000	178.0	8.4	3.3	2.9	1.22	4.0	8.0	Q3
LM4050BEM3-5.0/NOPB	SOT-23	DBZ	3	1000	178.0	8.4	3.3	2.9	1.22	4.0	8.0	Q3
LM4050BEM3-8.2/NOPB	SOT-23	DBZ	3	1000	178.0	8.4	3.3	2.9	1.22	4.0	8.0	Q3
LM4050BEM3X-10/NOPB	SOT-23	DBZ	3	3000	178.0	8.4	3.3	2.9	1.22	4.0	8.0	Q3
LM4050BEM3X-2.5/NOPB	SOT-23	DBZ	3	3000	178.0	8.4	3.3	2.9	1.22	4.0	8.0	Q3
LM4050BEM3X-5.0/NOPB	SOT-23	DBZ	3	3000	178.0	8.4	3.3	2.9	1.22	4.0	8.0	Q3
LM4050BIM3-10/NOPB	SOT-23	DBZ	3	1000	178.0	8.4	3.3	2.9	1.22	4.0	8.0	Q3
LM4050BIM3-2.5	SOT-23	DBZ	3	1000	178.0	8.4	3.3	2.9	1.22	4.0	8.0	Q3
LM4050BIM3-2.5/NOPB	SOT-23	DBZ	3	1000	178.0	8.4	3.3	2.9	1.22	4.0	8.0	Q3
LM4050BIM3-4.1/NOPB	SOT-23	DBZ	3	1000	178.0	8.4	3.3	2.9	1.22	4.0	8.0	Q3
LM4050BIM3-5.0	SOT-23	DBZ	3	1000	178.0	8.4	3.3	2.9	1.22	4.0	8.0	Q3
LM4050BIM3-5.0/NOPB	SOT-23	DBZ	3	1000	178.0	8.4	3.3	2.9	1.22	4.0	8.0	Q3
LM4050BIM3X-2.0/NOPB	SOT-23	DBZ	3	3000	178.0	8.4	3.3	2.9	1.22	4.0	8.0	Q3
LM4050BIM3X-2.5/NOPB	SOT-23	DBZ	3	3000	178.0	8.4	3.3	2.9	1.22	4.0	8.0	Q3
LM4050BIM3X-4.1/NOPB	SOT-23	DBZ	3	3000	178.0	8.4	3.3	2.9	1.22	4.0	8.0	Q3
LM4050BIM3X-5.0/NOPB	SOT-23	DBZ	3	3000	178.0	8.4	3.3	2.9	1.22	4.0	8.0	Q3
LM4050CEM3-10/NOPB	SOT-23	DBZ	3	1000	178.0	8.4	3.3	2.9	1.22	4.0	8.0	Q3
LM4050CEM3-2.5	SOT-23	DBZ	3	1000	178.0	8.4	3.3	2.9	1.22	4.0	8.0	Q3
LM4050CEM3-2.5/NOPB	SOT-23	DBZ	3	1000	178.0	8.4	3.3	2.9	1.22	4.0	8.0	Q3
LM4050CEM3-5.0	SOT-23	DBZ	3	1000	178.0	8.4	3.3	2.9	1.22	4.0	8.0	Q3
LM4050CEM3-5.0/NOPB	SOT-23	DBZ	3	1000	178.0	8.4	3.3	2.9	1.22	4.0	8.0	Q3
LM4050CEM3X-2.5/NOPB	SOT-23	DBZ	3	3000	178.0	8.4	3.3	2.9	1.22	4.0	8.0	Q3
LM4050CEM3X-5.0/NOPB	SOT-23	DBZ	3	3000	178.0	8.4	3.3	2.9	1.22	4.0	8.0	Q3
LM4050CIM3-10/NOPB	SOT-23	DBZ	3	1000	178.0	8.4	3.3	2.9	1.22	4.0	8.0	Q3
LM4050CIM3-2.5/NOPB	SOT-23	DBZ	3	1000	178.0	8.4	3.3	2.9	1.22	4.0	8.0	Q3
LM4050CIM3-4.1/NOPB	SOT-23	DBZ	3	1000	178.0	8.4	3.3	2.9	1.22	4.0	8.0	Q3
LM4050CIM3-5.0	SOT-23	DBZ	3	1000	178.0	8.4	3.3	2.9	1.22	4.0	8.0	Q3
LM4050CIM3-5.0/NOPB	SOT-23	DBZ	3	1000	178.0	8.4	3.3	2.9	1.22	4.0	8.0	Q3
LM4050CIM3X-2.0/NOPB	SOT-23	DBZ	3	3000	178.0	8.4	3.3	2.9	1.22	4.0	8.0	Q3
LM4050CIM3X-2.5/NOPB	SOT-23	DBZ	3	3000	178.0	8.4	3.3	2.9	1.22	4.0	8.0	Q3
LM4050CIM3X-4.1/NOPB	SOT-23	DBZ	3	3000	178.0	8.4	3.3	2.9	1.22	4.0	8.0	Q3
LM4050CIM3X-5.0/NOPB	SOT-23	DBZ	3	3000	178.0	8.4	3.3	2.9	1.22	4.0	8.0	Q3
LM4050QAEM3-10/NOPB	SOT-23	DBZ	3	1000	178.0	8.4	3.3	2.9	1.22	4.0	8.0	Q3
LM4050QAEM3-2.0/NOPB	SOT-23	DBZ	3	1000	178.0	8.4	3.3	2.9	1.22	4.0	8.0	Q3
LM4050QAEM3-2.5/NOPB	SOT-23	DBZ	3	1000	178.0	8.4	3.3	2.9	1.22	4.0	8.0	Q3

Device	Package Type	Package Drawing	Pins	SPQ	Reel Diameter (mm)	Reel Width W1 (mm)	A0 (mm)	B0 (mm)	K0 (mm)	P1 (mm)	W (mm)	Pin1 Quadrant
LM4050QAEM3-4.1/NOPB	SOT-23	DBZ	3	1000	178.0	8.4	3.3	2.9	1.22	4.0	8.0	Q3
LM4050QAEM3-5.0/NOPB	SOT-23	DBZ	3	1000	178.0	8.4	3.3	2.9	1.22	4.0	8.0	Q3
LM4050QAEM3-8.2/NOPB	SOT-23	DBZ	3	1000	178.0	8.4	3.3	2.9	1.22	4.0	8.0	Q3
LM4050QAEM3X10/NOPB	SOT-23	DBZ	3	3000	178.0	8.4	3.3	2.9	1.22	4.0	8.0	Q3
LM4050QAEM3X2.0/NOPB	SOT-23	DBZ	3	3000	178.0	8.4	3.3	2.9	1.22	4.0	8.0	Q3
LM4050QAEM3X2.5/NOPB	SOT-23	DBZ	3	3000	178.0	8.4	3.3	2.9	1.22	4.0	8.0	Q3
LM4050QAEM3X4.1/NOPB	SOT-23	DBZ	3	3000	178.0	8.4	3.3	2.9	1.22	4.0	8.0	Q3
LM4050QAEM3X5.0/NOPB	SOT-23	DBZ	3	3000	178.0	8.4	3.3	2.9	1.22	4.0	8.0	Q3
LM4050QAEM3X8.2/NOPB	SOT-23	DBZ	3	3000	178.0	8.4	3.3	2.9	1.22	4.0	8.0	Q3
LM4050QAIM3-10/NOPB	SOT-23	DBZ	3	1000	178.0	8.4	3.3	2.9	1.22	4.0	8.0	Q3
LM4050QAIM3-2.0/NOPB	SOT-23	DBZ	3	1000	178.0	8.4	3.3	2.9	1.22	4.0	8.0	Q3
LM4050QAIM3-2.5/NOPB	SOT-23	DBZ	3	1000	178.0	8.4	3.3	2.9	1.22	4.0	8.0	Q3
LM4050QAIM3-4.1/NOPB	SOT-23	DBZ	3	1000	178.0	8.4	3.3	2.9	1.22	4.0	8.0	Q3
LM4050QAIM3-8.2/NOPB	SOT-23	DBZ	3	1000	178.0	8.4	3.3	2.9	1.22	4.0	8.0	Q3
LM4050QAIM3X4.1/NOPB	SOT-23	DBZ	3	3000	178.0	8.4	3.3	2.9	1.22	4.0	8.0	Q3
LM4050QBEM3-10/NOPB	SOT-23	DBZ	3	1000	178.0	8.4	3.3	2.9	1.22	4.0	8.0	Q3
LM4050QBEM3-2.0/NOPB	SOT-23	DBZ	3	1000	178.0	8.4	3.3	2.9	1.22	4.0	8.0	Q3
LM4050QBEM3-2.5/NOPB	SOT-23	DBZ	3	1000	178.0	8.4	3.3	2.9	1.22	4.0	8.0	Q3
LM4050QBEM3-4.1/NOPB	SOT-23	DBZ	3	1000	178.0	8.4	3.3	2.9	1.22	4.0	8.0	Q3
LM4050QBEM3-5.0/NOPB	SOT-23	DBZ	3	1000	178.0	8.4	3.3	2.9	1.22	4.0	8.0	Q3
LM4050QBEM3-8.2/NOPB	SOT-23	DBZ	3	1000	178.0	8.4	3.3	2.9	1.22	4.0	8.0	Q3
LM4050QBEM3X10/NOPB	SOT-23	DBZ	3	3000	178.0	8.4	3.3	2.9	1.22	4.0	8.0	Q3
LM4050QBEM3X2.0/NOPB	SOT-23	DBZ	3	3000	178.0	8.4	3.3	2.9	1.22	4.0	8.0	Q3
LM4050QBEM3X2.5/NOPB	SOT-23	DBZ	3	3000	178.0	8.4	3.3	2.9	1.22	4.0	8.0	Q3
LM4050QBEM3X4.1/NOPB	SOT-23	DBZ	3	3000	178.0	8.4	3.3	2.9	1.22	4.0	8.0	Q3
LM4050QBEM3X5.0/NOPB	SOT-23	DBZ	3	3000	178.0	8.4	3.3	2.9	1.22	4.0	8.0	Q3
LM4050QBEM3X8.2/NOPB	SOT-23	DBZ	3	3000	178.0	8.4	3.3	2.9	1.22	4.0	8.0	Q3
LM4050QBIM3-10/NOPB	SOT-23	DBZ	3	1000	178.0	8.4	3.3	2.9	1.22	4.0	8.0	Q3
LM4050QBIM3-2.0/NOPB	SOT-23	DBZ	3	1000	178.0	8.4	3.3	2.9	1.22	4.0	8.0	Q3

Device	Package Type	Package Drawing	Pins	SPQ	Reel Diameter (mm)	Reel Width W1 (mm)	A0 (mm)	B0 (mm)	K0 (mm)	P1 (mm)	W (mm)	Pin1 Quadrant
LM4050QBIM3-2.5/NOPB	SOT-23	DBZ	3	1000	178.0	8.4	3.3	2.9	1.22	4.0	8.0	Q3
LM4050QBIM3-4.1/NOPB	SOT-23	DBZ	3	1000	178.0	8.4	3.3	2.9	1.22	4.0	8.0	Q3
LM4050QBIM3-5.0/NOPB	SOT-23	DBZ	3	1000	178.0	8.4	3.3	2.9	1.22	4.0	8.0	Q3
LM4050QBIM3-8.2/NOPB	SOT-23	DBZ	3	1000	178.0	8.4	3.3	2.9	1.22	4.0	8.0	Q3
LM4050QCEM3-10/NOPB	SOT-23	DBZ	3	1000	178.0	8.4	3.3	2.9	1.22	4.0	8.0	Q3
LM4050QCEM3-2.0/NOPB	SOT-23	DBZ	3	1000	178.0	8.4	3.3	2.9	1.22	4.0	8.0	Q3
LM4050QCEM3-2.5/NOPB	SOT-23	DBZ	3	1000	178.0	8.4	3.3	2.9	1.22	4.0	8.0	Q3
LM4050QCEM3-4.1/NOPB	SOT-23	DBZ	3	1000	178.0	8.4	3.3	2.9	1.22	4.0	8.0	Q3
LM4050QCEM3-5.0/NOPB	SOT-23	DBZ	3	1000	178.0	8.4	3.3	2.9	1.22	4.0	8.0	Q3
LM4050QCEM3-8.2/NOPB	SOT-23	DBZ	3	1000	178.0	8.4	3.3	2.9	1.22	4.0	8.0	Q3
LM4050QCEM3X10/NOPB	SOT-23	DBZ	3	3000	178.0	8.4	3.3	2.9	1.22	4.0	8.0	Q3
LM4050QCEM3X2.0/NOPB	SOT-23	DBZ	3	3000	178.0	8.4	3.3	2.9	1.22	4.0	8.0	Q3
LM4050QCEM3X2.5/NOPB	SOT-23	DBZ	3	3000	178.0	8.4	3.3	2.9	1.22	4.0	8.0	Q3
LM4050QCEM3X4.1/NOPB	SOT-23	DBZ	3	3000	178.0	8.4	3.3	2.9	1.22	4.0	8.0	Q3
LM4050QCEM3X5.0/NOPB	SOT-23	DBZ	3	3000	178.0	8.4	3.3	2.9	1.22	4.0	8.0	Q3
LM4050QCEM3X8.2/NOPB	SOT-23	DBZ	3	3000	178.0	8.4	3.3	2.9	1.22	4.0	8.0	Q3
LM4050QCIM3-2.0/NOPB	SOT-23	DBZ	3	1000	178.0	8.4	3.3	2.9	1.22	4.0	8.0	Q3
LM4050QCIM3-4.1/NOPB	SOT-23	DBZ	3	1000	178.0	8.4	3.3	2.9	1.22	4.0	8.0	Q3
LM4050QCIM3-5.0/NOPB	SOT-23	DBZ	3	1000	178.0	8.4	3.3	2.9	1.22	4.0	8.0	Q3

TAPE AND REEL BOX DIMENSIONS

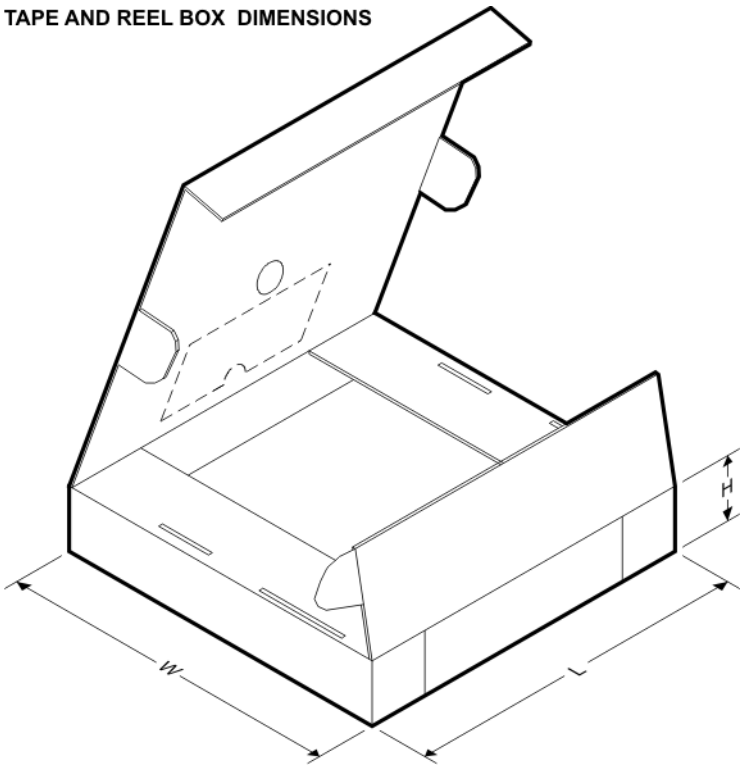

*All dimensions are nominal

Device	Package Type	Package Drawing	Pins	SPQ	Length (mm)	Width (mm)	Height (mm)
LM4050AEM3-10/NOPB	SOT-23	DBZ	3	1000	208.0	191.0	35.0
LM4050AEM3-2.0/NOPB	SOT-23	DBZ	3	1000	208.0	191.0	35.0
LM4050AEM3-2.5	SOT-23	DBZ	3	1000	208.0	191.0	35.0
LM4050AEM3-2.5/NOPB	SOT-23	DBZ	3	1000	208.0	191.0	35.0
LM4050AEM3-5.0	SOT-23	DBZ	3	1000	208.0	191.0	35.0
LM4050AEM3-5.0/NOPB	SOT-23	DBZ	3	1000	208.0	191.0	35.0
LM4050AEM3-8.2/NOPB	SOT-23	DBZ	3	1000	208.0	191.0	35.0
LM4050AEM3X-10/NOPB	SOT-23	DBZ	3	3000	208.0	191.0	35.0
LM4050AEM3X-2.5/NOPB	SOT-23	DBZ	3	3000	208.0	191.0	35.0
LM4050AEM3X-5.0/NOPB	SOT-23	DBZ	3	3000	208.0	191.0	35.0
LM4050AIM3-10/NOPB	SOT-23	DBZ	3	1000	208.0	191.0	35.0
LM4050AIM3-2.5	SOT-23	DBZ	3	1000	208.0	191.0	35.0
LM4050AIM3-2.5/NOPB	SOT-23	DBZ	3	1000	208.0	191.0	35.0
LM4050AIM3-4.1	SOT-23	DBZ	3	1000	208.0	191.0	35.0
LM4050AIM3-4.1/NOPB	SOT-23	DBZ	3	1000	208.0	191.0	35.0
LM4050AIM3-5.0	SOT-23	DBZ	3	1000	208.0	191.0	35.0
LM4050AIM3-5.0/NOPB	SOT-23	DBZ	3	1000	208.0	191.0	35.0
LM4050AIM3X-2.5/NOPB	SOT-23	DBZ	3	3000	208.0	191.0	35.0
LM4050AIM3X-4.1/NOPB	SOT-23	DBZ	3	3000	208.0	191.0	35.0
LM4050AIM3X-5.0/NOPB	SOT-23	DBZ	3	3000	208.0	191.0	35.0

Device	Package Type	Package Drawing	Pins	SPQ	Length (mm)	Width (mm)	Height (mm)
LM4050BEM3-10/NOPB	SOT-23	DBZ	3	1000	208.0	191.0	35.0
LM4050BEM3-2.5	SOT-23	DBZ	3	1000	208.0	191.0	35.0
LM4050BEM3-2.5/NOPB	SOT-23	DBZ	3	1000	208.0	191.0	35.0
LM4050BEM3-4.1/NOPB	SOT-23	DBZ	3	1000	208.0	191.0	35.0
LM4050BEM3-5.0	SOT-23	DBZ	3	1000	208.0	191.0	35.0
LM4050BEM3-5.0/NOPB	SOT-23	DBZ	3	1000	208.0	191.0	35.0
LM4050BEM3-8.2/NOPB	SOT-23	DBZ	3	1000	208.0	191.0	35.0
LM4050BEM3X-10/NOPB	SOT-23	DBZ	3	3000	208.0	191.0	35.0
LM4050BEM3X-2.5/NOPB	SOT-23	DBZ	3	3000	208.0	191.0	35.0
LM4050BEM3X-5.0/NOPB	SOT-23	DBZ	3	3000	208.0	191.0	35.0
LM4050BIM3-10/NOPB	SOT-23	DBZ	3	1000	208.0	191.0	35.0
LM4050BIM3-2.5	SOT-23	DBZ	3	1000	208.0	191.0	35.0
LM4050BIM3-2.5/NOPB	SOT-23	DBZ	3	1000	208.0	191.0	35.0
LM4050BIM3-4.1/NOPB	SOT-23	DBZ	3	1000	208.0	191.0	35.0
LM4050BIM3-5.0	SOT-23	DBZ	3	1000	208.0	191.0	35.0
LM4050BIM3-5.0/NOPB	SOT-23	DBZ	3	1000	208.0	191.0	35.0
LM4050BIM3X-2.0/NOPB	SOT-23	DBZ	3	3000	208.0	191.0	35.0
LM4050BIM3X-2.5/NOPB	SOT-23	DBZ	3	3000	208.0	191.0	35.0
LM4050BIM3X-4.1/NOPB	SOT-23	DBZ	3	3000	208.0	191.0	35.0
LM4050BIM3X-5.0/NOPB	SOT-23	DBZ	3	3000	208.0	191.0	35.0
LM4050CEM3-10/NOPB	SOT-23	DBZ	3	1000	208.0	191.0	35.0
LM4050CEM3-2.5	SOT-23	DBZ	3	1000	208.0	191.0	35.0
LM4050CEM3-2.5/NOPB	SOT-23	DBZ	3	1000	208.0	191.0	35.0
LM4050CEM3-5.0	SOT-23	DBZ	3	1000	208.0	191.0	35.0
LM4050CEM3-5.0/NOPB	SOT-23	DBZ	3	1000	208.0	191.0	35.0
LM4050CEM3X-2.5/NOPB	SOT-23	DBZ	3	3000	208.0	191.0	35.0
LM4050CEM3X-5.0/NOPB	SOT-23	DBZ	3	3000	208.0	191.0	35.0
LM4050CIM3-10/NOPB	SOT-23	DBZ	3	1000	208.0	191.0	35.0
LM4050CIM3-2.5/NOPB	SOT-23	DBZ	3	1000	208.0	191.0	35.0
LM4050CIM3-4.1/NOPB	SOT-23	DBZ	3	1000	208.0	191.0	35.0
LM4050CIM3-5.0	SOT-23	DBZ	3	1000	208.0	191.0	35.0
LM4050CIM3-5.0/NOPB	SOT-23	DBZ	3	1000	208.0	191.0	35.0
LM4050CIM3X-2.0/NOPB	SOT-23	DBZ	3	3000	208.0	191.0	35.0
LM4050CIM3X-2.5/NOPB	SOT-23	DBZ	3	3000	208.0	191.0	35.0
LM4050CIM3X-4.1/NOPB	SOT-23	DBZ	3	3000	208.0	191.0	35.0
LM4050CIM3X-5.0/NOPB	SOT-23	DBZ	3	3000	208.0	191.0	35.0
LM4050QAEM3-10/NOPB	SOT-23	DBZ	3	1000	208.0	191.0	35.0
LM4050QAEM3-2.0/NOPB	SOT-23	DBZ	3	1000	208.0	191.0	35.0
LM4050QAEM3-2.5/NOPB	SOT-23	DBZ	3	1000	208.0	191.0	35.0
LM4050QAEM3-4.1/NOPB	SOT-23	DBZ	3	1000	208.0	191.0	35.0
LM4050QAEM3-5.0/NOPB	SOT-23	DBZ	3	1000	208.0	191.0	35.0
LM4050QAEM3-8.2/NOPB	SOT-23	DBZ	3	1000	208.0	191.0	35.0
LM4050QAEM3X10/NOPB	SOT-23	DBZ	3	3000	208.0	191.0	35.0
LM4050QAEM3X2.0/NOP	SOT-23	DBZ	3	3000	208.0	191.0	35.0

Device	Package Type	Package Drawing	Pins	SPQ	Length (mm)	Width (mm)	Height (mm)
B							
LM4050QAEM3X2.5/NOPB	SOT-23	DBZ	3	3000	208.0	191.0	35.0
LM4050QAEM3X4.1/NOPB	SOT-23	DBZ	3	3000	208.0	191.0	35.0
LM4050QAEM3X5.0/NOPB	SOT-23	DBZ	3	3000	208.0	191.0	35.0
LM4050QAEM3X8.2/NOPB	SOT-23	DBZ	3	3000	208.0	191.0	35.0
LM4050QAIM3-10/NOPB	SOT-23	DBZ	3	1000	208.0	191.0	35.0
LM4050QAIM3-2.0/NOPB	SOT-23	DBZ	3	1000	208.0	191.0	35.0
LM4050QAIM3-2.5/NOPB	SOT-23	DBZ	3	1000	208.0	191.0	35.0
LM4050QAIM3-4.1/NOPB	SOT-23	DBZ	3	1000	208.0	191.0	35.0
LM4050QAIM3-8.2/NOPB	SOT-23	DBZ	3	1000	208.0	191.0	35.0
LM4050QAIM3X4.1/NOPB	SOT-23	DBZ	3	3000	208.0	191.0	35.0
LM4050QBEM3-10/NOPB	SOT-23	DBZ	3	1000	208.0	191.0	35.0
LM4050QBEM3-2.0/NOPB	SOT-23	DBZ	3	1000	208.0	191.0	35.0
LM4050QBEM3-2.5/NOPB	SOT-23	DBZ	3	1000	208.0	191.0	35.0
LM4050QBEM3-4.1/NOPB	SOT-23	DBZ	3	1000	208.0	191.0	35.0
LM4050QBEM3-5.0/NOPB	SOT-23	DBZ	3	1000	208.0	191.0	35.0
LM4050QBEM3-8.2/NOPB	SOT-23	DBZ	3	1000	208.0	191.0	35.0
LM4050QBEM3X10/NOPB	SOT-23	DBZ	3	3000	208.0	191.0	35.0
LM4050QBEM3X2.0/NOPB	SOT-23	DBZ	3	3000	208.0	191.0	35.0
LM4050QBEM3X2.5/NOPB	SOT-23	DBZ	3	3000	208.0	191.0	35.0
LM4050QBEM3X4.1/NOPB	SOT-23	DBZ	3	3000	208.0	191.0	35.0
LM4050QBEM3X5.0/NOPB	SOT-23	DBZ	3	3000	208.0	191.0	35.0
LM4050QBEM3X8.2/NOPB	SOT-23	DBZ	3	3000	208.0	191.0	35.0
LM4050QBIM3-10/NOPB	SOT-23	DBZ	3	1000	208.0	191.0	35.0
LM4050QBIM3-2.0/NOPB	SOT-23	DBZ	3	1000	208.0	191.0	35.0
LM4050QBIM3-2.5/NOPB	SOT-23	DBZ	3	1000	208.0	191.0	35.0
LM4050QBIM3-4.1/NOPB	SOT-23	DBZ	3	1000	208.0	191.0	35.0
LM4050QBIM3-5.0/NOPB	SOT-23	DBZ	3	1000	208.0	191.0	35.0
LM4050QBIM3-8.2/NOPB	SOT-23	DBZ	3	1000	208.0	191.0	35.0
LM4050QCEM3-10/NOPB	SOT-23	DBZ	3	1000	208.0	191.0	35.0
LM4050QCEM3-2.0/NOPB	SOT-23	DBZ	3	1000	208.0	191.0	35.0
LM4050QCEM3-2.5/NOPB	SOT-23	DBZ	3	1000	208.0	191.0	35.0
LM4050QCEM3-4.1/NOPB	SOT-23	DBZ	3	1000	208.0	191.0	35.0
LM4050QCEM3-5.0/NOPB	SOT-23	DBZ	3	1000	208.0	191.0	35.0
LM4050QCEM3-8.2/NOPB	SOT-23	DBZ	3	1000	208.0	191.0	35.0
LM4050QCEM3X10/NOPB	SOT-23	DBZ	3	3000	208.0	191.0	35.0
LM4050QCEM3X2.0/NOPB	SOT-23	DBZ	3	3000	208.0	191.0	35.0

Device	Package Type	Package Drawing	Pins	SPQ	Length (mm)	Width (mm)	Height (mm)
LM4050QCEM3X2.5/NOPB	SOT-23	DBZ	3	3000	208.0	191.0	35.0
LM4050QCEM3X4.1/NOPB	SOT-23	DBZ	3	3000	208.0	191.0	35.0
LM4050QCEM3X5.0/NOPB	SOT-23	DBZ	3	3000	208.0	191.0	35.0
LM4050QCEM3X8.2/NOPB	SOT-23	DBZ	3	3000	208.0	191.0	35.0
LM4050QCIM3-2.0/NOPB	SOT-23	DBZ	3	1000	208.0	191.0	35.0
LM4050QCIM3-4.1/NOPB	SOT-23	DBZ	3	1000	208.0	191.0	35.0
LM4050QCIM3-5.0/NOPB	SOT-23	DBZ	3	1000	208.0	191.0	35.0

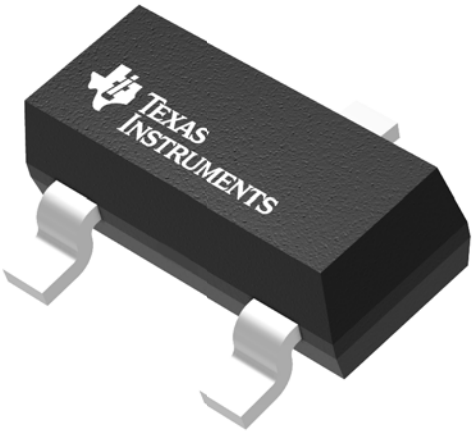

Images above are just a representation of the package family, actual package may vary.
Refer to the product data sheet for package details.

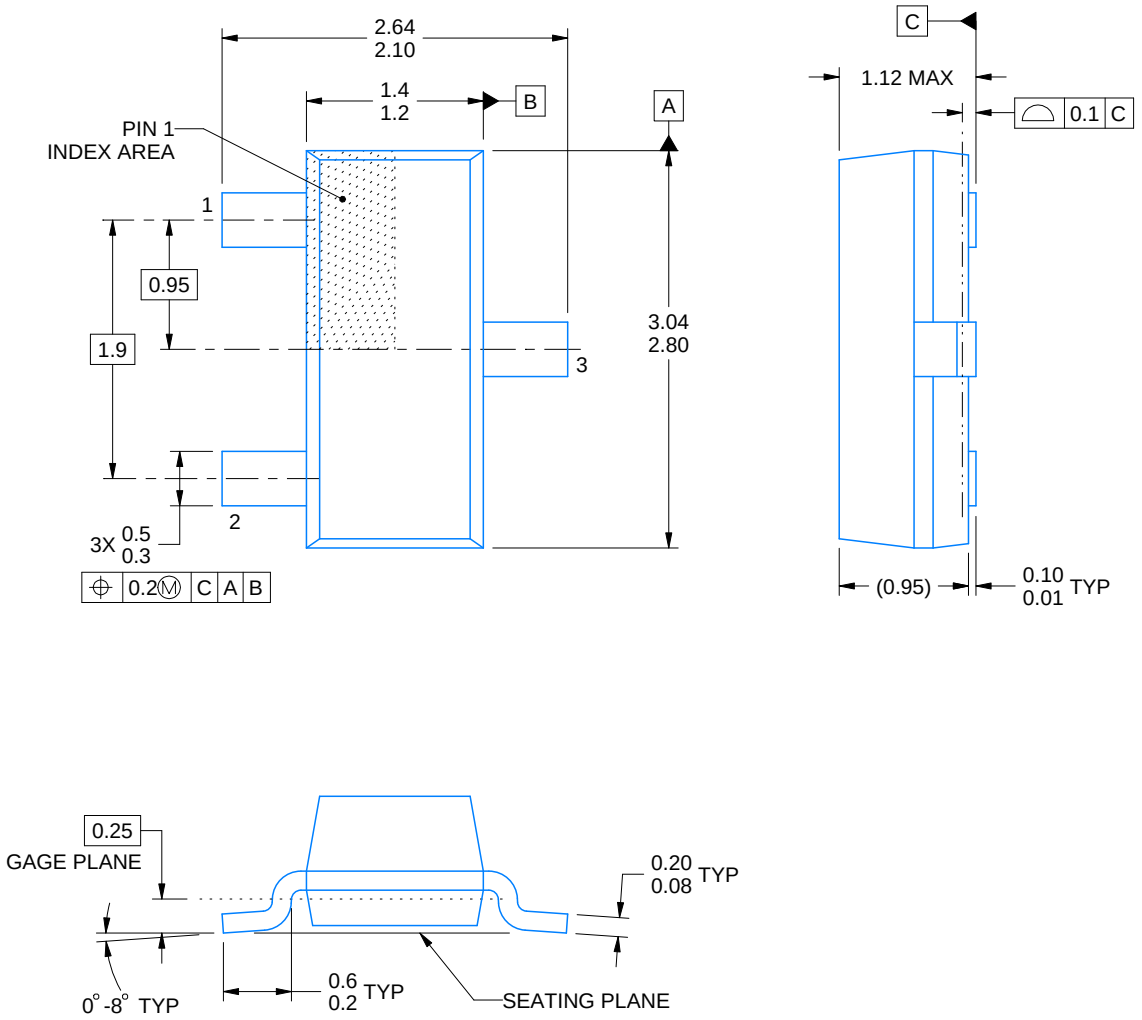

4214838/C 04/2017

NOTES:

1. All linear dimensions are in millimeters. Any dimensions in parenthesis are for reference only. Dimensioning and tolerancing per ASME Y14.5M.
2. This drawing is subject to change without notice.
3. Reference JEDEC registration TO-236, except minimum foot length.

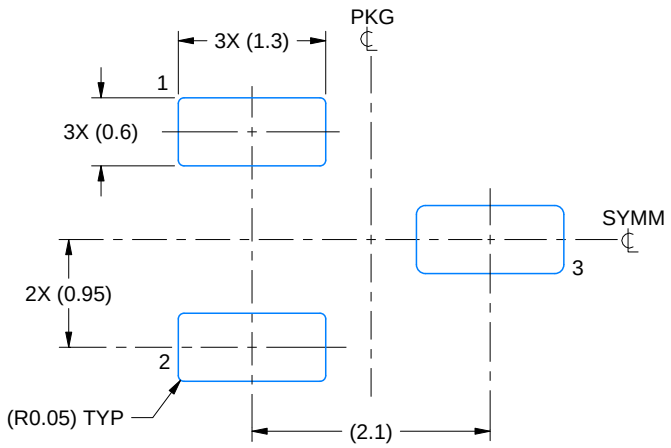

LAND PATTERN EXAMPLE
SCALE:15X

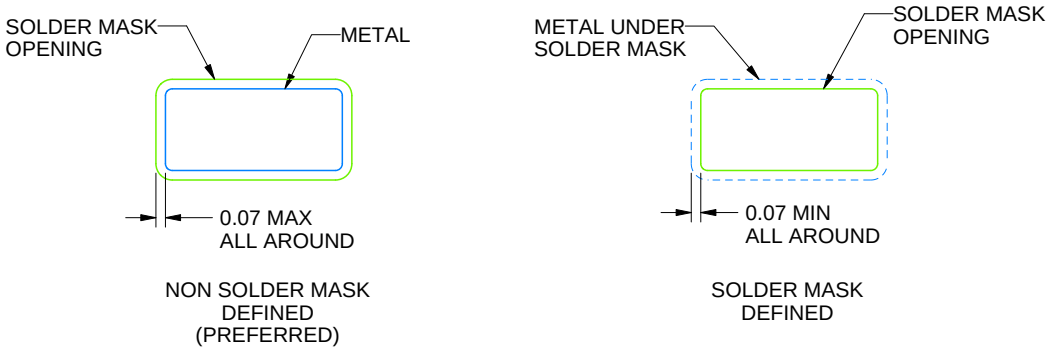

SOLDER MASK DETAILS

4214838/C 04/2017

NOTES: (continued)

4. Publication IPC-7351 may have alternate designs.
5. Solder mask tolerances between and around signal pads can vary based on board fabrication site.

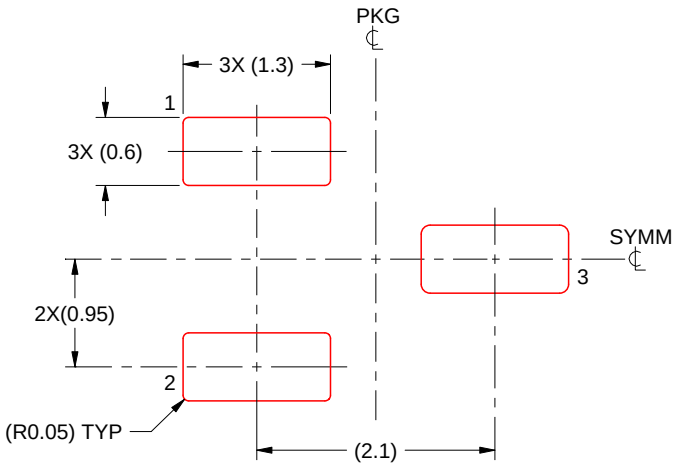

SOLDER PASTE EXAMPLE
BASED ON 0.125 THICK STENCIL
SCALE:15X

4214838/C 04/2017

NOTES: (continued)

6. Laser cutting apertures with trapezoidal walls and rounded corners may offer better paste release. IPC-7525 may have alternate design recommendations.
7. Board assembly site may have different recommendations for stencil design.

IMPORTANT NOTICE AND DISCLAIMER

TI PROVIDES TECHNICAL AND RELIABILITY DATA (INCLUDING DATA SHEETS), DESIGN RESOURCES (INCLUDING REFERENCE DESIGNS), APPLICATION OR OTHER DESIGN ADVICE, WEB TOOLS, SAFETY INFORMATION, AND OTHER RESOURCES “AS IS” AND WITH ALL FAULTS, AND DISCLAIMS ALL WARRANTIES, EXPRESS AND IMPLIED, INCLUDING WITHOUT LIMITATION ANY IMPLIED WARRANTIES OF MERCHANTABILITY, FITNESS FOR A PARTICULAR PURPOSE OR NON-INFRINGEMENT OF THIRD PARTY INTELLECTUAL PROPERTY RIGHTS.

These resources are intended for skilled developers designing with TI products. You are solely responsible for (1) selecting the appropriate TI products for your application, (2) designing, validating and testing your application, and (3) ensuring your application meets applicable standards, and any other safety, security, regulatory or other requirements.

These resources are subject to change without notice. TI grants you permission to use these resources only for development of an application that uses the TI products described in the resource. Other reproduction and display of these resources is prohibited. No license is granted to any other TI intellectual property right or to any third party intellectual property right. TI disclaims responsibility for, and you will fully indemnify TI and its representatives against, any claims, damages, costs, losses, and liabilities arising out of your use of these resources.

TI’s products are provided subject to TI’s Terms of Sale or other applicable terms available either on ti.com or provided in conjunction with such TI products. TI’s provision of these resources does not expand or otherwise alter TI’s applicable warranties or warranty disclaimers for TI products.

TI objects to and rejects any additional or different terms you may have proposed.

Mailing Address: Texas Instruments, Post Office Box 655303, Dallas, Texas 75265
Copyright © 2022, Texas Instruments Incorporated