LM4040 Precision Micropower Shunt Voltage Reference

1 Features

- Fixed Output Voltages of 2.048 V, 2.5 V, 3 V, 4.096 V, 5 V, 8.192 V, and 10 V
- Tight Output Tolerances and Low Temperature Coefficient
  - Max 0.1%, 100 ppm/°C – A Grade
  - Max 0.2%, 100 ppm/°C – B Grade
  - Max 0.5%, 100 ppm/°C – C Grade
  - Max 1.0%, 150 ppm/°C – D Grade
- Low Output Noise: 35 μV_{RMS} Typ
- Wide Operating Current Range: 45 μA Typ to 15 mA
- Stable With All Capacitive Loads; No Output Capacitor Required
- Available in Extended Temperature Range: –40°C to 125°C

2 Applications

- Data-Acquisition Systems
- Power Supplies and Power-Supply Monitors
- Instrumentation and Test Equipment
- Process Controls
- Precision Audio
- Automotive Electronics
- Energy Management
- Battery-Powered Equipment

3 Description

The LM4040 series of shunt voltage references are versatile, easy-to-use references that cater to a vast array of applications. The 2-pin fixed-output device requires no external capacitors for operation and is stable with all capacitive loads. Additionally, the reference offers low dynamic impedance, low noise, and low temperature coefficient to ensure a stable output voltage over a wide range of operating currents and temperatures. The LM4040 uses fuse and Zener-zap reverse breakdown voltage trim during wafer sort to offer four output voltage tolerances, ranging from 0.1% (max) for the A grade to 1% (max) for the D grade. Thus, a great deal of flexibility is offered to designers in choosing the best cost-to-performance ratio for their applications.

Packaged in space-saving SC-70 and SOT-23-3 packages and requiring a minimum current of 45 μA (typ), the LM4040 also is ideal for portable applications. The LM4040xI is characterized for operation over an ambient temperature range of –40°C to 85°C. The LM4040xQ is characterized for operation over an ambient temperature range of –40°C to 125°C.

Device Information(1)

PART NUMBER	PACKAGE (PIN)	BODY SIZE (NOM)
LM4040	SOT-23 (3)	2.92 mm × 1.30 mm
	SC70 (6)	2.00 mm × 1.25 mm

(1) For all available packages, see the orderable addendum at the end of the data sheet.

Simplified Schematic

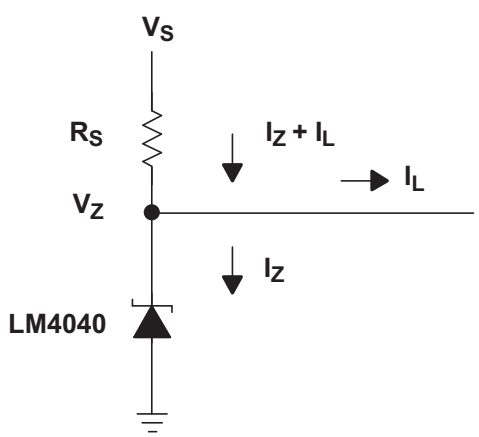

An IMPORTANT NOTICE at the end of this data sheet addresses availability, warranty, changes, use in safety-critical applications, intellectual property matters and other important disclaimers. PRODUCTION DATA.

Table of Contents

1 Features ... 1
2 Applications ... 1
3 Description ... 1
4 Revision History ... 2
5 Pin Configuration and Functions ... 4
6 Specifications ... 5
6.1 Absolute Maximum Ratings ... 5
6.2 ESD Ratings ... 5
6.3 Recommended Operating Conditions ... 5
6.4 Thermal Information ... 5
6.5 LM4040A20I, LM4040B20I Electrical Characteristics ... 6
6.6 LM4040C20I, LM4040D20I Electrical Characteristics ... 7
6.7 LM4040C20Q, LM4040D20Q Electrical Characteristics ... 8
6.8 LM4040A25I, LM4040B25I Electrical Characteristics ... 9
6.9 LM4040C25I, LM4040D25I Electrical Characteristics ... 10
6.10 LM4040C25Q, LM4040D25Q Electrical Characteristics ... 11
6.11 LM4040A30I, LM4040B30I Electrical Characteristics ... 12
6.12 LM4040C30I, LM4040D30I Electrical Characteristics ... 13
6.13 LM4040C30Q, LM4040D30Q Electrical Characteristics ... 14
6.14 LM4040A41I, LM4040B41I Electrical Characteristics ... 15
6.15 LM4040C41I, LM4040D41I Electrical Characteristics ... 16
6.16 LM4040A50I, LM4040B50I Electrical Characteristics ... 17
6.17 LM4040C50I, LM4040D50I Electrical Characteristics ... 18
6.18 LM4040C50Q, LM4040D50Q Electrical Characteristics ... 19
6.19 LM4040A82I, LM4040B82I Electrical Characteristics ... 20
6.20 LM4040C82I, LM4040D82I Electrical Characteristics ... 21
6.21 LM4040A10I, LM4040B10I Electrical Characteristics ... 22
6.22 LM4040C10I, LM4040D10I Electrical Characteristics ... 23
6.23 Typical Characteristics ... 24
7 Detailed Description ... 25
7.1 Overview ... 25
7.2 Functional Block Diagram ... 25
7.3 Feature Description ... 25
7.4 Device Functional Modes ... 25
8 Applications and Implementation ... 26
8.1 Application Information ... 26
8.2 Typical Applications ... 26
9 Power Supply Recommendations ... 29
10 Layout ... 29
10.1 Layout Guidelines ... 29
10.2 Layout Example ... 29
11 Device and Documentation Support ... 30
11.1 Related Links ... 30
11.2 Trademarks ... 30
11.3 Electrostatic Discharge Caution ... 30
11.4 Glossary ... 30
12 Mechanical, Packaging, and Orderable Information ... 30

4 Revision History

Changes from Revision M (January 2015) to Revision N — **Page**

- Changed generic part number to include shorter list (LM4040A/B/C/D) ... 1
- Added Average temperature coefficient of reverse breakdown voltage footnote to all electrical tables ... 6
- Changed Thermal hysteresis in electrical characteristics tables ... 6

Changes from Revision L (January 2009) to Revision M — **Page**

- Added *Applications*, *Device Information* table, *Pin Functions* table, *ESD Ratings* table, *Thermal Information* table, *Feature Description* section, *Device Functional Modes*, *Application and Implementation* section, *Power Supply Recommendations* section, *Layout* section, *Device and Documentation Support* section, and *Mechanical, Packaging, and Orderable Information* section. ... 1
- Deleted *Ordering Information* table. ... 1

Copyright © 2005–2017, Texas Instruments Incorporated

Device Comparison Table[(1)]

T_A	DEVICE GRADE	V_{KA}	ORDERABLE PART NUMBER
–40°C to 85°C	A grade: 0.1% initial accuracy and 100 ppm/°C temperature coefficient	2.048 V	LM4040A20I
		2.5 V	LM4040A25I
		3 V	LM4040A30I
		4.096 V	LM4040A41I
		5 V	LM4040A50I
		8.192 V	LM4040A82I
		10 V	LM4040A10I
	B grade: 0.2% initial accuracy and 100 ppm/°C temperature coefficient	2.048 V	LM4040B20I
		2.5 V	LM4040B25I
		3 V	LM4040B30I
		4.096 V	LM4040B41I
		5 V	LM4040B50I
		8.192 V	LM4040B82I
		10 V	LM4040B10I
–40°C to 85°C	C grade: 0.5% initial accuracy and 100 ppm/°C temperature coefficient	2.048 V	LM4040C20I
		2.5 V	LM4040C25I
		3 V	LM4040C30I
		4.096 V	LM4040C41I
		5 V	LM4040C50I
		8.192 V	LM4040C82I
		10 V	LM4040C10I
–40°C to 85°C	D grade: 1.0% initial accuracy and 150 ppm/°C temperature coefficient	2.048 V	LM4040D20I
		2.5 V	LM4040D25I
		3 V	LM4040D30I
		4.096 V	LM4040D41I
		5 V	LM4040D50I
		8.192 V	LM4040D82I
		10 V	LM4040D10I
–40°C to 125°C	C grade: 0.5% initial accuracy and 100 ppm/°C temperature coefficient	2.048 V	LM4040C20Q
		2.5 V	LM4040C25Q
		3 V	LM4040C30Q
		5 V	LM4040C50Q
	D grade: 1.0% initial accuracy and 150 ppm/°C temperature coefficient	2.048 V	LM4040D20Q
		2.5 V	LM4040D25Q
		3 V	LM4040D30Q
		5 V	LM4040D50Q

(1) For the most current package and ordering information, see the Package Option Addendum at the end of this document, or see the TI web site at www.ti.com.

Copyright © 2005–2017, Texas Instruments Incorporated

5 Pin Configuration and Functions

DBZ (SOT-23) PACKAGE
(TOP VIEW)

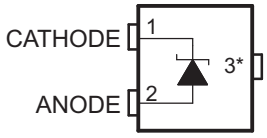

* Pin 3 is attached to substrate and must be connected to ANODE or left open.

DCK (SC-70) PACKAGE
(TOP VIEW)

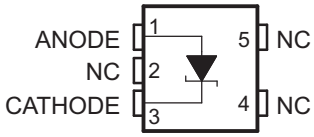

NC – No internal connection

Pin Functions

PIN			TYPE	DESCRIPTION
NAME	DBZ	DCK		
CATHODE	1	3	I/O	Shunt Current/Voltage input
ANODE	2	1	O	Common pin, normally connected to ground
NC	—	2, 4, 5	I	No Internal Connection
*	3	—	I	Substrate Connection

Copyright © 2005–2017, Texas Instruments Incorporated

6 Specifications

6.1 Absolute Maximum Ratings

over free-air temperature range (unless otherwise noted)[1]

		MIN	MAX	UNIT
I_Z	Continuous cathode current	–10	25	mA
T_J	Operating virtual junction temperature		150	°C
T_{stg}	Storage temperature range	–65	150	°C

(1) Stresses beyond those listed under *Absolute Maximum Ratings* may cause permanent damage to the device. These are stress ratings only, and functional operation of the device at these or any other conditions beyond those indicated under *Recommended Operating Conditions*is not implied. Exposure to absolute-maximum-rated conditions for extended periods may affect device reliability.

6.2 ESD Ratings

			VALUE	UNIT
$V_{(ESD)}$	Electrostatic discharge	Human body model (HBM), per ANSI/ESDA/JEDEC JS-001, all pins[1]	±2000	V
		Charged device model (CDM), per JEDEC specification JESD22-C101, all pins[2]	±1000	

(1) JEDEC document JEP155 states that 500-V HBM allows safe manufacturing with a standard ESD control process.
(2) JEDEC document JEP157 states that 250-V CDM allows safe manufacturing with a standard ESD control process.

6.3 Recommended Operating Conditions

			MIN	MAX	UNIT
I_Z	Cathode current		[1]	15	mA
T_A	Free-air temperature	LM4040xxxI	–40	85	°C
		LM4040xxxQ	–40	125	

(1) See parametric tables

6.4 Thermal Information

THERMAL METRIC[1]		LM4040		UNIT
		DBZ	DCK	
		3 PINS	5 PINS	
$R_{\theta JA}$	Junction-to-ambient thermal resistance	206	252	°C/W

(1) For more information about traditional and new thermal metrics, see the *Semiconductor and IC Package Thermal Metrics* application report.

6.5 LM4040A20I, LM4040B20I Electrical Characteristics

at industrial temperature range, full-range T_A = –40°C to 85°C (unless otherwise noted)

PARAMETER		TEST CONDITIONS	T_A	LM4040A20I			LM4040B20I			UNIT
				MIN	TYP	MAX	MIN	TYP	MAX	
V_Z	Reverse breakdown voltage	I_Z = 100 μA	25°C		2.048			2.048		V
ΔV_Z	Reverse breakdown voltage tolerance	I_Z = 100 μA	25°C	–2		2	–4.1		4.1	mV
			Full range	–15		15	–17		17	
$I_{Z,min}$	Minimum cathode current		25°C		45	75		45	75	μA
			Full range			80			80	
α_{VZ}	Average temperature coefficient of reverse breakdown voltage (1)	I_Z = 10 mA	25°C		±20			±20		ppm/°C
		I_Z = 1 mA	25°C		±15			±15		
			Full range			±100			±100	
		I_Z = 100 μA	25°C		±15			±15		
$\frac{\Delta V_Z}{\Delta I_Z}$	Reverse breakdown voltage change with cathode current change	$I_{Z,min} < I_Z < 1$ mA	25°C		0.3	0.8		0.3	0.8	mV
			Full range			1			1	
		1 mA < I_Z < 15 mA	25°C		2.5	6		2.5	6	
			Full range			8			8	
Z_Z	Reverse dynamic impedance	I_Z = 1 mA, f = 120 Hz, I_{AC} = 0.1 I_Z	25°C		0.3	0.8		0.3	0.8	Ω
e_N	Wideband noise	I_Z = 100 μA, 10 Hz ≤ f ≤ 10 kHz	25°C		35			35		μV_{RMS}
	Long-term stability of reverse breakdown voltage	t = 1000 h, T_A = 25°C ± 0.1°C, I_Z = 100 μA			120			120		ppm
V_{HYST}	Thermal hysteresis (2)	ΔT_A = –40°C to 125°C			0.08%			0.08%		—

(1) The overtemperature limit for Reverse Breakdown Voltage Tolerance is defined as the room temperature Reverse Breakdown Voltage Tolerance ±[($\Delta V_R/\Delta T$)(maxΔT)(V_R)]. Where, $\Delta V_R/\Delta T$ is the V_R temperature coefficient, maxΔT is the maximum difference in temperature from the reference point of 25°C to T_{MIN} or T_{MAX}, and V_R is the reverse breakdown voltage. The total overtemperature tolerance for the different grades in the industrial temperature range where maxΔT = 65°C is shown below:
A-grade: ±0.75% = ±0.1% ±100 ppm/°C × 65°C
B-grade: ±0.85% = ±0.2% ±100 ppm/°C × 65°C
C-grade: ±1.15% = ±0.5% ±100 ppm/°C × 65°C
D-grade: ±1.98% = ±1.0% ±150 ppm/°C × 65°C
The total overtemperature tolerance for the different grades in the extended temperature range where max ΔT = 100 °C is shown below:
C-grade: ±1.5% = ±0.5% ±100 ppm/°C × 100°C
D-grade: ±2.5% = ±1.0% ±150 ppm/°C × 100°C
Therefore, as an example, the A-grade 2.5-V LM4040 has an overtemperature Reverse Breakdown Voltage tolerance of ±2.5 V × 0.75% = ±19 mV.

(2) Thermal hysteresis is defined as the difference in voltage measured at 25°C after cycling to temperature –40°C and the 25°C measurement after cycling to temperature 125°C.

Copyright © 2005–2017, Texas Instruments Incorporated

6.6 LM4040C20I, LM4040D20I Electrical Characteristics

at industrial temperature range, full-range T_A = –40°C to 85°C (unless otherwise noted)

PARAMETER		TEST CONDITIONS	T_A	LM4040C20I			LM4040D20I			UNIT
				MIN	TYP	MAX	MIN	TYP	MAX	
V_Z	Reverse breakdown voltage	I_Z = 100 μA	25°C		2.048			2.048		V
ΔV_Z	Reverse breakdown voltage tolerance	I_Z = 100 μA	25°C	–10		10	–20		20	mV
			Full range	–23		23	–40		40	
$I_{Z,min}$	Minimum cathode current		25°C		45	75		45	75	μA
			Full range			80			80	
α_{VZ}	Average temperature coefficient of reverse breakdown voltage (1)	I_Z = 10 mA	25°C		±20			±20		ppm/°C
		I_Z = 1 mA	25°C		±15			±15		
			Full range			±100			±150	
		I_Z = 100 μA	25°C		±15			±15		
$\frac{\Delta V_Z}{\Delta I_Z}$	Reverse breakdown voltage change with cathode current change	$I_{Z,min} < I_Z < 1$ mA	25°C		0.3	0.8		0.3	1	mV
			Full range			1			1.2	
		1 mA < I_Z < 15 mA	25°C		2.5	6		2.5	8	
			Full range			8			10	
Z_Z	Reverse dynamic impedance	I_Z = 1 mA, f = 120 Hz, I_{AC} = 0.1 I_Z	25°C		0.3	0.9		0.3	1.1	Ω
e_N	Wideband noise	I_Z = 100 μA, 10 Hz ≤ f ≤ 10 kHz	25°C		35			35		μV_{RMS}
	Long-term stability of reverse breakdown voltage	t = 1000 h, T_A = 25°C ± 0.1°C, I_Z = 100 μA			120			120		ppm
V_{HYST}	Thermal hysteresis (2)	ΔT_A = –40°C to 125°C			0.08%			0.08%		—

(1) The overtemperature limit for Reverse Breakdown Voltage Tolerance is defined as the room temperature Reverse Breakdown Voltage Tolerance ±[($\Delta V_R/\Delta T$)(maxΔT)(V_R)]. Where, $\Delta V_R/\Delta T$ is the V_R temperature coefficient, maxΔT is the maximum difference in temperature from the reference point of 25°C to T_{MIN} or T_{MAX}, and V_R is the reverse breakdown voltage. The total overtemperature tolerance for the different grades in the industrial temperature range where maxΔT = 65°C is shown below:
A-grade: ±0.75% = ±0.1% ±100 ppm/°C × 65°C
B-grade: ±0.85% = ±0.2% ±100 ppm/°C × 65°C
C-grade: ±1.15% = ±0.5% ±100 ppm/°C × 65°C
D-grade: ±1.98% = ±1.0% ±150 ppm/°C × 65°C
The total overtemperature tolerance for the different grades in the extended temperature range where max ΔT = 100 °C is shown below:
C-grade: ±1.5% = ±0.5% ±100 ppm/°C × 100°C
D-grade: ±2.5% = ±1.0% ±150 ppm/°C × 100°C
Therefore, as an example, the A-grade 2.5-V LM4040 has an overtemperature Reverse Breakdown Voltage tolerance of ±2.5 V × 0.75% = ±19 mV.

(2) Thermal hysteresis is defined as the difference in voltage measured at 25°C after cycling to temperature –40°C and the 25°C measurement after cycling to temperature 125°C.

6.7 LM4040C20Q, LM4040D20Q Electrical Characteristics

at extended temperature range, full-range T_A = –40°C to 125°C (unless otherwise noted)

PARAMETER		TEST CONDITIONS	T_A	LM4040C20Q			LM4040D20Q			UNIT
				MIN	TYP	MAX	MIN	TYP	MAX	
V_Z	Reverse breakdown voltage	I_Z = 100 μA	25°C		2.048			2.048		V
ΔV_Z	Reverse breakdown voltage tolerance	I_Z = 100 μA	25°C	–10		10	–20		20	mV
			Full range	–30		30	–50		50	
$I_{Z,min}$	Minimum cathode current		25°C		45	75		45	75	μA
			Full range			80			80	
α_{VZ}	Average temperature coefficient of reverse breakdown voltage (1)	I_Z = 10 mA	25°C		±20			±20		ppm/°C
		I_Z = 1 mA	25°C		±15			±15		
			Full range			±100			±150	
		I_Z = 100 μA	25°C		±15			±15		
$\frac{\Delta V_Z}{\Delta I_Z}$	Reverse breakdown voltage change with cathode current change	$I_{Z,min} < I_Z < 1$ mA	25°C		0.3	0.8		0.3	1	mV
			Full range			1			1.2	
		1 mA < I_Z < 15 mA	25°C		2.5	6		2.5	8	
			Full range			8			10	
Z_Z	Reverse dynamic impedance	I_Z = 1 mA, f = 120 Hz, I_{AC} = 0.1 I_Z	25°C		0.3	0.9		0.3	1.1	Ω
e_N	Wideband noise	I_Z = 100 μA, 10 Hz ≤ f ≤ 10 kHz	25°C		35			35		μV_{RMS}
	Long-term stability of reverse breakdown voltage	t = 1000 h, T_A = 25°C ± 0.1°C, I_Z = 100 μA			120			120		ppm
V_{HYST}	Thermal hysteresis (2)	ΔT_A = –40°C to 125°C			0.08%			0.08%		—

(1) The overtemperature limit for Reverse Breakdown Voltage Tolerance is defined as the room temperature Reverse Breakdown Voltage Tolerance ±[($\Delta V_R/\Delta T$)(maxΔT)(V_R)]. Where, $\Delta V_R/\Delta T$ is the V_R temperature coefficient, maxΔT is the maximum difference in temperature from the reference point of 25°C to T_{MIN} or T_{MAX}, and V_R is the reverse breakdown voltage. The total overtemperature tolerance for the different grades in the industrial temperature range where maxΔT = 65°C is shown below:
A-grade: ±0.75% = ±0.1% ±100 ppm/°C × 65°C
B-grade: ±0.85% = ±0.2% ±100 ppm/°C × 65°C
C-grade: ±1.15% = ±0.5% ±100 ppm/°C × 65°C
D-grade: ±1.98% = ±1.0% ±150 ppm/°C × 65°C
The total overtemperature tolerance for the different grades in the extended temperature range where max ΔT = 100 °C is shown below:
C-grade: ±1.5% = ±0.5% ±100 ppm/°C × 100°C
D-grade: ±2.5% = ±1.0% ±150 ppm/°C × 100°C
Therefore, as an example, the A-grade 2.5-V LM4040 has an overtemperature Reverse Breakdown Voltage tolerance of ±2.5 V × 0.75% = ±19 mV.

(2) Thermal hysteresis is defined as the difference in voltage measured at 25°C after cycling to temperature –40°C and the 25°C measurement after cycling to temperature 125°C.

Copyright © 2005–2017, Texas Instruments Incorporated

6.8 LM4040A25I, LM4040B25I Electrical Characteristics

at industrial temperature range, full-range T_A = –40°C to 85°C (unless otherwise noted)

PARAMETER		TEST CONDITIONS	T_A	LM4040A25I			LM4040B25I			UNIT
				MIN	TYP	MAX	MIN	TYP	MAX	
V_Z	Reverse breakdown voltage	I_Z = 100 μA	25°C		2.5			2.5		V
ΔV_Z	Reverse breakdown voltage tolerance	I_Z = 100 μA	25°C	–2.5		2.5	–5		5	mV
			Full range	–19		19	–21		21	
$I_{Z,min}$	Minimum cathode current		25°C		45	75		45	75	μA
			Full range			80			80	
α_{VZ}	Average temperature coefficient of reverse breakdown voltage (1)	I_Z = 10 mA	25°C		±20			±20		ppm/°C
		I_Z = 1 mA	25°C		±15			±15		
			Full range			±100			±100	
		I_Z = 100 μA	25°C		±15			±15		
$\frac{\Delta V_Z}{\Delta I_Z}$	Reverse breakdown voltage change with cathode current change	$I_{Z,min} < I_Z < 1$ mA	25°C		0.3	0.8		0.3	0.8	mV
			Full range			1			1	
		1 mA < I_Z < 15 mA	25°C		2.5	6		2.5	6	
			Full range			8			8	
Z_Z	Reverse dynamic impedance	I_Z = 1 mA, f = 120 Hz, I_{AC} = 0.1 I_Z	25°C		0.3	0.8		0.3	0.8	Ω
e_N	Wideband noise	I_Z = 100 μA, 10 Hz ≤ f ≤ 10 kHz	25°C		35			35		μV_{RMS}
	Long-term stability of reverse breakdown voltage	t = 1000 h, T_A = 25°C ± 0.1°C, I_Z = 100 μA			120			120		ppm
V_{HYST}	Thermal hysteresis (2)	ΔT_A = –40°C to 125°C			0.08%			0.08%		—

(1) The overtemperature limit for Reverse Breakdown Voltage Tolerance is defined as the room temperature Reverse Breakdown Voltage Tolerance ±[($\Delta V_R/\Delta T$)(maxΔT)(V_R)]. Where, $\Delta V_R/\Delta T$ is the V_R temperature coefficient, maxΔT is the maximum difference in temperature from the reference point of 25°C to T_{MIN} or T_{MAX}, and V_R is the reverse breakdown voltage. The total overtemperature tolerance for the different grades in the industrial temperature range where maxΔT = 65°C is shown below:
A-grade: ±0.75% = ±0.1% ±100 ppm/°C × 65°C
B-grade: ±0.85% = ±0.2% ±100 ppm/°C × 65°C
C-grade: ±1.15% = ±0.5% ±100 ppm/°C × 65°C
D-grade: ±1.98% = ±1.0% ±150 ppm/°C × 65°C
The total overtemperature tolerance for the different grades in the extended temperature range where max ΔT = 100 °C is shown below:
C-grade: ±1.5% = ±0.5% ±100 ppm/°C × 100°C
D-grade: ±2.5% = ±1.0% ±150 ppm/°C × 100°C
Therefore, as an example, the A-grade 2.5-V LM4040 has an overtemperature Reverse Breakdown Voltage tolerance of ±2.5 V × 0.75% = ±19 mV.

(2) Thermal hysteresis is defined as the difference in voltage measured at 25°C after cycling to temperature –40°C and the 25°C measurement after cycling to temperature 125°C.

6.9 LM4040C25I, LM4040D25I Electrical Characteristics

at industrial temperature range, full-range T_A = –40°C to 85°C (unless otherwise noted)

PARAMETER		TEST CONDITIONS	T_A	LM4040C25I			LM4040D25I			UNIT
				MIN	TYP	MAX	MIN	TYP	MAX	
V_Z	Reverse breakdown voltage	I_Z = 100 μA	25°C		2.5			2.5		V
ΔV_Z	Reverse breakdown voltage tolerance	I_Z = 100 μA	25°C	–12		12	–25		25	mV
			Full range	–29		29	–49		49	
$I_{Z,min}$	Minimum cathode current		25°C		45	75		45	75	μA
			Full range			80			80	
α_{VZ}	Average temperature coefficient of reverse breakdown voltage (1)	I_Z = 10 mA	25°C		±20			±20		ppm/°C
		I_Z = 1 mA	25°C		±15			±15		
			Full range			±100			±150	
		I_Z = 100 μA	25°C		±15			±15		
$\frac{\Delta V_Z}{\Delta I_Z}$	Reverse breakdown voltage change with cathode current change	$I_{Z,min} < I_Z < 1$ mA	25°C		0.3	0.8		0.3	1	mV
			Full range			1			1.2	
		1 mA < I_Z < 15 mA	25°C		2.5	6		2.5	8	
			Full range			8			10	
Z_Z	Reverse dynamic impedance	I_Z = 1 mA, f = 120 Hz, I_{AC} = 0.1 I_Z	25°C		0.3	0.9		0.3	1.1	Ω
e_N	Wideband noise	I_Z = 100 μA, 10 Hz ≤ f ≤ 10 kHz	25°C		35			35		μV_{RMS}
	Long-term stability of reverse breakdown voltage	t = 1000 h, T_A = 25°C ± 0.1°C, I_Z = 100 μA			120			120		ppm
V_{HYST}	Thermal hysteresis (2)	ΔT_A = –40°C to 125°C			0.08%			0.08%		—

(1) The overtemperature limit for Reverse Breakdown Voltage Tolerance is defined as the room temperature Reverse Breakdown Voltage Tolerance ±[($\Delta V_R/\Delta T$)(maxΔT)(V_R)]. Where, $\Delta V_R/\Delta T$ is the V_R temperature coefficient, maxΔT is the maximum difference in temperature from the reference point of 25°C to T_{MIN} or T_{MAX}, and V_R is the reverse breakdown voltage. The total overtemperature tolerance for the different grades in the industrial temperature range where maxΔT = 65°C is shown below:
A-grade: ±0.75% = ±0.1% ±100 ppm/°C × 65°C
B-grade: ±0.85% = ±0.2% ±100 ppm/°C × 65°C
C-grade: ±1.15% = ±0.5% ±100 ppm/°C × 65°C
D-grade: ±1.98% = ±1.0% ±150 ppm/°C × 65°C
The total overtemperature tolerance for the different grades in the extended temperature range where max ΔT = 100 °C is shown below:
C-grade: ±1.5% = ±0.5% ±100 ppm/°C × 100°C
D-grade: ±2.5% = ±1.0% ±150 ppm/°C × 100°C
Therefore, as an example, the A-grade 2.5-V LM4040 has an overtemperature Reverse Breakdown Voltage tolerance of ±2.5 V × 0.75% = ±19 mV.

(2) Thermal hysteresis is defined as the difference in voltage measured at 25°C after cycling to temperature –40°C and the 25°C measurement after cycling to temperature 125°C.

Copyright © 2005–2017, Texas Instruments Incorporated

6.10 LM4040C25Q, LM4040D25Q Electrical Characteristics

at extended temperature range, full-range T_A = –40°C to 125°C (unless otherwise noted)

PARAMETER		TEST CONDITIONS	T_A	LM4040C25Q			LM4040D25Q			UNIT
				MIN	TYP	MAX	MIN	TYP	MAX	
V_Z	Reverse breakdown voltage	I_Z = 100 μA	25°C		2.5			2.5		V
ΔV_Z	Reverse breakdown voltage tolerance	I_Z = 100 μA	25°C	–12		12	–25		25	mV
			Full range	–38		38	–63		63	
$I_{Z,min}$	Minimum cathode current		25°C		45	75		45	75	μA
			Full range			80			80	
α_{VZ}	Average temperature coefficient of reverse breakdown voltage (1)	I_Z = 10 mA	25°C		±20			±20		ppm/°C
		I_Z = 1 mA	25°C		±15			±15		
			Full range			±100			±150	
		I_Z = 100 μA	25°C		±15			±15		
$\frac{\Delta V_Z}{\Delta I_Z}$	Reverse breakdown voltage change with cathode current change	$I_{Z,min} < I_Z < 1$ mA	25°C		0.3	0.8		0.3	1	mV
			Full range			1			1.2	
		1 mA < I_Z < 15 mA	25°C		2.5	6		2.5	8	
			Full range			8			10	
Z_Z	Reverse dynamic impedance	I_Z = 1 mA, f = 120 Hz, I_{AC} = 0.1 I_Z	25°C		0.3	0.9		0.3	1.1	Ω
e_N	Wideband noise	I_Z = 100 μA, 10 Hz ≤ f ≤ 10 kHz	25°C		35			35		μV_{RMS}
	Long-term stability of reverse breakdown voltage	t = 1000 h, T_A = 25°C ± 0.1°C, I_Z = 100 μA			120			120		ppm
V_{HYST}	Thermal hysteresis (2)	ΔT_A = –40°C to 125°C			0.08%			0.08%		—

(1) The overtemperature limit for Reverse Breakdown Voltage Tolerance is defined as the room temperature Reverse Breakdown Voltage Tolerance ±[($\Delta V_R/\Delta T$)(maxΔT)(V_R)]. Where, $\Delta V_R/\Delta T$ is the V_R temperature coefficient, maxΔT is the maximum difference in temperature from the reference point of 25°C to T_{MIN} or T_{MAX}, and V_R is the reverse breakdown voltage. The total overtemperature tolerance for the different grades in the industrial temperature range where maxΔT = 65°C is shown below:
A-grade: ±0.75% = ±0.1% ±100 ppm/°C × 65°C
B-grade: ±0.85% = ±0.2% ±100 ppm/°C × 65°C
C-grade: ±1.15% = ±0.5% ±100 ppm/°C × 65°C
D-grade: ±1.98% = ±1.0% ±150 ppm/°C × 65°C
The total overtemperature tolerance for the different grades in the extended temperature range where max ΔT = 100 °C is shown below:
C-grade: ±1.5% = ±0.5% ±100 ppm/°C × 100°C
D-grade: ±2.5% = ±1.0% ±150 ppm/°C × 100°C
Therefore, as an example, the A-grade 2.5-V LM4040 has an overtemperature Reverse Breakdown Voltage tolerance of ±2.5 V × 0.75% = ±19 mV.

(2) Thermal hysteresis is defined as the difference in voltage measured at 25°C after cycling to temperature –40°C and the 25°C measurement after cycling to temperature 125°C.

6.11 LM4040A30I, LM4040B30I Electrical Characteristics

at industrial temperature range, full-range T_A = –40°C to 85°C (unless otherwise noted)

PARAMETER		TEST CONDITIONS	T_A	LM4040A30I			LM4040B30I			UNIT
				MIN	TYP	MAX	MIN	TYP	MAX	
V_Z	Reverse breakdown voltage	I_Z = 100 μA	25°C		3			3		V
ΔV_Z	Reverse breakdown voltage tolerance	I_Z = 100 μA	25°C	–3		3	–6		6	mV
			Full range	–22		22	–26		26	
$I_{Z,min}$	Minimum cathode current		25°C		47	77		47	77	μA
			Full range			82			82	
α_{VZ}	Average temperature coefficient of reverse breakdown voltage (1)	I_Z = 10 mA	25°C		±20			±20		ppm/°C
		I_Z = 1 mA	25°C		±15			±15		
			Full range			±100			±100	
		I_Z = 100 μA	25°C		±15			±15		
$\frac{\Delta V_Z}{\Delta I_Z}$	Reverse breakdown voltage change with cathode current change	$I_{Z,min} < I_Z < 1$ mA	25°C		0.6	0.8		0.6	0.8	mV
			Full range			1.1			1.1	
		1 mA < I_Z < 15 mA	25°C		2.7	6		2.7	6	
			Full range			9			9	
Z_Z	Reverse dynamic impedance	I_Z = 1 mA, f = 120 Hz, I_{AC} = 0.1 I_Z	25°C		0.4	0.9		0.4	0.9	Ω
e_N	Wideband noise	I_Z = 100 μA, 10 Hz ≤ f ≤ 10 kHz	25°C		35			35		μV_{RMS}
	Long-term stability of reverse breakdown voltage	t = 1000 h, T_A = 25°C ± 0.1°C, I_Z = 100 μA			120			120		ppm
V_{HYST}	Thermal hysteresis (2)	ΔT_A = –40°C to 125°C			0.08%			0.08%		—

(1) The overtemperature limit for Reverse Breakdown Voltage Tolerance is defined as the room temperature Reverse Breakdown Voltage Tolerance ±[($\Delta V_R/\Delta T$)(maxΔT)(V_R)]. Where, $\Delta V_R/\Delta T$ is the V_R temperature coefficient, maxΔT is the maximum difference in temperature from the reference point of 25°C to T_{MIN} or T_{MAX}, and V_R is the reverse breakdown voltage. The total overtemperature tolerance for the different grades in the industrial temperature range where maxΔT = 65°C is shown below:
A-grade: ±0.75% = ±0.1% ±100 ppm/°C × 65°C
B-grade: ±0.85% = ±0.2% ±100 ppm/°C × 65°C
C-grade: ±1.15% = ±0.5% ±100 ppm/°C × 65°C
D-grade: ±1.98% = ±1.0% ±150 ppm/°C × 65°C
The total overtemperature tolerance for the different grades in the extended temperature range where max ΔT = 100 °C is shown below:
C-grade: ±1.5% = ±0.5% ±100 ppm/°C × 100°C
D-grade: ±2.5% = ±1.0% ±150 ppm/°C × 100°C
Therefore, as an example, the A-grade 2.5-V LM4040 has an overtemperature Reverse Breakdown Voltage tolerance of ±2.5 V × 0.75% = ±19 mV.

(2) Thermal hysteresis is defined as the difference in voltage measured at 25°C after cycling to temperature –40°C and the 25°C measurement after cycling to temperature 125°C.

Copyright © 2005–2017, Texas Instruments Incorporated

6.12 LM4040C30I, LM4040D30I Electrical Characteristics

at industrial temperature range, full-range T_A = –40°C to 85°C (unless otherwise noted)

PARAMETER		TEST CONDITIONS	T_A	LM4040C30I			LM4040D30I			UNIT
				MIN	TYP	MAX	MIN	TYP	MAX	
V_Z	Reverse breakdown voltage	I_Z = 100 μA	25°C		3			3		V
ΔV_Z	Reverse breakdown voltage tolerance	I_Z = 100 μA	25°C	–15		15	–30		30	mV
			Full range	–34		34	–59		59	
$I_{Z,min}$	Minimum cathode current		25°C		45	77		45	77	μA
			Full range			82			82	
α_{VZ}	Average temperature coefficient of reverse breakdown voltage (1)	I_Z = 10 mA	25°C		±20			±20		ppm/°C
		I_Z = 1 mA	25°C		±15			±15		
			Full range			±100			±150	
		I_Z = 100 μA	25°C		±15			±15		
$\frac{\Delta V_Z}{\Delta I_Z}$	Reverse breakdown voltage change with cathode current change	$I_{Z,min} < I_Z < 1$ mA	25°C		0.4	0.8		1.4	1	mV
			Full range			1.1			1.3	
		1 mA < I_Z < 15 mA	25°C		2.7	6		2.7	8	
			Full range			9			11	
Z_Z	Reverse dynamic impedance	I_Z = 1 mA, f = 120 Hz, I_{AC} = 0.1 I_Z	25°C		0.4	0.9		0.4	1.2	Ω
e_N	Wideband noise	I_Z = 100 μA, 10 Hz ≤ f ≤ 10 kHz	25°C		35			35		μV_{RMS}
	Long-term stability of reverse breakdown voltage	t = 1000 h, T_A = 25°C ± 0.1°C, I_Z = 100 μA			120			120		ppm
V_{HYST}	Thermal hysteresis (2)	ΔT_A = –40°C to 125°C			0.08%			0.08%		—

(1) The overtemperature limit for Reverse Breakdown Voltage Tolerance is defined as the room temperature Reverse Breakdown Voltage Tolerance ±[($\Delta V_R/\Delta T$)(maxΔT)(V_R)]. Where, $\Delta V_R/\Delta T$ is the V_R temperature coefficient, maxΔT is the maximum difference in temperature from the reference point of 25°C to T_{MIN} or T_{MAX}, and V_R is the reverse breakdown voltage. The total overtemperature tolerance for the different grades in the industrial temperature range where maxΔT = 65°C is shown below:
A-grade: ±0.75% = ±0.1% ±100 ppm/°C × 65°C
B-grade: ±0.85% = ±0.2% ±100 ppm/°C × 65°C
C-grade: ±1.15% = ±0.5% ±100 ppm/°C × 65°C
D-grade: ±1.98% = ±1.0% ±150 ppm/°C × 65°C
The total overtemperature tolerance for the different grades in the extended temperature range where max ΔT = 100 °C is shown below:
C-grade: ±1.5% = ±0.5% ±100 ppm/°C × 100°C
D-grade: ±2.5% = ±1.0% ±150 ppm/°C × 100°C
Therefore, as an example, the A-grade 2.5-V LM4040 has an overtemperature Reverse Breakdown Voltage tolerance of ±2.5 V × 0.75% = ±19 mV.

(2) Thermal hysteresis is defined as the difference in voltage measured at 25°C after cycling to temperature –40°C and the 25°C measurement after cycling to temperature 125°C.

6.13 LM4040C30Q, LM4040D30Q Electrical Characteristics

at extended temperature range, full-range T_A = –40°C to 125°C (unless otherwise noted)

PARAMETER		TEST CONDITIONS	T_A	LM4040C30Q			LM4040D30Q			UNIT
				MIN	TYP	MAX	MIN	TYP	MAX	
V_Z	Reverse breakdown voltage	I_Z = 100 μA	25°C		3			3		V
ΔV_Z	Reverse breakdown voltage tolerance	I_Z = 100 μA	25°C	–15		15	–30		30	mV
			Full range	–45		45	–75		75	
$I_{Z,min}$	Minimum cathode current		25°C		47	77		47	77	μA
			Full range			82			82	
α_{VZ}	Average temperature coefficient of reverse breakdown voltage (1)	I_Z = 10 mA	25°C		±20			±20		ppm/°C
		I_Z = 1 mA	25°C		±15			±15		
			Full range			±100			±150	
		I_Z = 100 μA	25°C		±15			±15		
$\frac{\Delta V_Z}{\Delta I_Z}$	Reverse breakdown voltage change with cathode current change	$I_{Z,min} < I_Z < 1$ mA	25°C		0.4	0.8		0.4	1.1	mV
			Full range			1.1			1.3	
		1 mA < I_Z < 15 mA	25°C		2.7	6		2.7	8	
			Full range			9			11	
Z_Z	Reverse dynamic impedance	I_Z = 1 mA, f = 120 Hz, I_{AC} = 0.1 I_Z	25°C		0.4	0.9		0.4	1.2	Ω
e_N	Wideband noise	I_Z = 100 μA, 10 Hz ≤ f ≤ 10 kHz	25°C		35			35		μV_{RMS}
	Long-term stability of reverse breakdown voltage	t = 1000 h, T_A = 25°C ± 0.1°C, I_Z = 100 μA			120			120		ppm
V_{HYST}	Thermal hysteresis (2)	ΔT_A = –40°C to 125°C			0.08%			0.08%		—

(1) The overtemperature limit for Reverse Breakdown Voltage Tolerance is defined as the room temperature Reverse Breakdown Voltage Tolerance ±[($\Delta V_R/\Delta T$)(maxΔT)(V_R)]. Where, $\Delta V_R/\Delta T$ is the V_R temperature coefficient, maxΔT is the maximum difference in temperature from the reference point of 25°C to T_{MIN} or T_{MAX}, and V_R is the reverse breakdown voltage. The total overtemperature tolerance for the different grades in the industrial temperature range where maxΔT = 65°C is shown below:
A-grade: ±0.75% = ±0.1% ±100 ppm/°C × 65°C
B-grade: ±0.85% = ±0.2% ±100 ppm/°C × 65°C
C-grade: ±1.15% = ±0.5% ±100 ppm/°C × 65°C
D-grade: ±1.98% = ±1.0% ±150 ppm/°C × 65°C
The total overtemperature tolerance for the different grades in the extended temperature range where max ΔT = 100 °C is shown below:
C-grade: ±1.5% = ±0.5% ±100 ppm/°C × 100°C
D-grade: ±2.5% = ±1.0% ±150 ppm/°C × 100°C
Therefore, as an example, the A-grade 2.5-V LM4040 has an overtemperature Reverse Breakdown Voltage tolerance of ±2.5 V × 0.75% = ±19 mV.

(2) Thermal hysteresis is defined as the difference in voltage measured at 25°C after cycling to temperature –40°C and the 25°C measurement after cycling to temperature 125°C.

Copyright © 2005–2017, Texas Instruments Incorporated

6.14 LM4040A41I, LM4040B41I Electrical Characteristics

at industrial temperature range, full-range T_A = –40°C to 85°C (unless otherwise noted)

PARAMETER		TEST CONDITIONS	T_A	LM4040A41I			LM4040B41I			UNIT
				MIN	TYP	MAX	MIN	TYP	MAX	
V_Z	Reverse breakdown voltage	I_Z = 100 μA	25°C		4.096			4.096		V
ΔV_Z	Reverse breakdown voltage tolerance	I_Z = 100 μA	25°C	–4.1		4.1	–8.2		8.2	mV
			Full range	–31		31	–35		35	
$I_{Z,min}$	Minimum cathode current		25°C		50	83		50	83	μA
			Full range			88			88	
α_{VZ}	Average temperature coefficient of reverse breakdown voltage (1)	I_Z = 10 mA	25°C		±30			±30		ppm/°C
		I_Z = 1 mA	25°C		±20			±20		
			Full range			±100			±100	
		I_Z = 100 μA	25°C		±20			±20		
$\frac{\Delta V_Z}{\Delta I_Z}$	Reverse breakdown voltage change with cathode current change	$I_{Z,min} < I_Z < 1$ mA	25°C		0.5	0.9		0.5	0.9	mV
			Full range			1.2			1.2	
		1 mA < I_Z < 15 mA	25°C		3	7		3	7	
			Full range			10			10	
Z_Z	Reverse dynamic impedance	I_Z = 1 mA, f = 120 Hz, I_{AC} = 0.1 I_Z	25°C		0.5	1		0.5	1	Ω
e_N	Wideband noise	I_Z = 100 μA, 10 Hz ≤ f ≤ 10 kHz	25°C		80			80		μV_{RMS}
	Long-term stability of reverse breakdown voltage	t = 1000 h, T_A = 25°C ± 0.1°C, I_Z = 100 μA			120			120		ppm
V_{HYST}	Thermal hysteresis (2)	ΔT_A = –40°C to 125°C			0.08%			0.08%		—

(1) The overtemperature limit for Reverse Breakdown Voltage Tolerance is defined as the room temperature Reverse Breakdown Voltage Tolerance ±[($\Delta V_R/\Delta T$)(maxΔT)(V_R)]. Where, $\Delta V_R/\Delta T$ is the V_R temperature coefficient, maxΔT is the maximum difference in temperature from the reference point of 25°C to T_{MIN} or T_{MAX}, and V_R is the reverse breakdown voltage. The total overtemperature tolerance for the different grades in the industrial temperature range where maxΔT = 65°C is shown below:
A-grade: ±0.75% = ±0.1% ±100 ppm/°C × 65°C
B-grade: ±0.85% = ±0.2% ±100 ppm/°C × 65°C
C-grade: ±1.15% = ±0.5% ±100 ppm/°C × 65°C
D-grade: ±1.98% = ±1.0% ±150 ppm/°C × 65°C
The total overtemperature tolerance for the different grades in the extended temperature range where max ΔT = 100 °C is shown below:
C-grade: ±1.5% = ±0.5% ±100 ppm/°C × 100°C
D-grade: ±2.5% = ±1.0% ±150 ppm/°C × 100°C
Therefore, as an example, the A-grade 2.5-V LM4040 has an overtemperature Reverse Breakdown Voltage tolerance of ±2.5 V × 0.75% = ±19 mV.

(2) Thermal hysteresis is defined as the difference in voltage measured at 25°C after cycling to temperature –40°C and the 25°C measurement after cycling to temperature 125°C.

6.15 LM4040C41I, LM4040D41I Electrical Characteristics

at industrial temperature range, full-range T_A = –40°C to 85°C (unless otherwise noted)

PARAMETER		TEST CONDITIONS	T_A	LM4040C41I			LM4040D41I			UNIT
				MIN	TYP	MAX	MIN	TYP	MAX	
V_Z	Reverse breakdown voltage	I_Z = 100 μA	25°C		4.096			4.096		V
ΔV_Z	Reverse breakdown voltage tolerance	I_Z = 100 μA	25°C	–20		20	–41		41	mV
			Full range	–47		47	–81		81	
$I_{Z,min}$	Minimum cathode current		25°C		50	83		50	83	μA
			Full range			88			88	
α_{VZ}	Average temperature coefficient of reverse breakdown voltage (1)	I_Z = 10 mA	25°C		±30			±30		ppm/°C
		I_Z = 1 mA	25°C		±20			±20		
			Full range			±100			±150	
		I_Z = 100 μA	25°C		±20			±20		
$\frac{\Delta V_Z}{\Delta I_Z}$	Reverse breakdown voltage change with cathode current change	$I_{Z,min} < I_Z < 1$ mA	25°C		0.5	0.9		0.5	1.2	mV
			Full range			1.2			1.5	
		1 mA < I_Z < 15 mA	25°C		3	7		3	9	
			Full range			10			13	
Z_Z	Reverse dynamic impedance	I_Z = 1 mA, f = 120 Hz, I_{AC} = 0.1 I_Z	25°C		0.5	1		0.5	1.3	Ω
e_N	Wideband noise	I_Z = 100 μA, 10 Hz ≤ f ≤ 10 kHz	25°C		80			80		μV_{RMS}
	Long-term stability of reverse breakdown voltage	t = 1000 h, T_A = 25°C ± 0.1°C, I_Z = 100 μA			120			120		ppm
V_{HYST}	Thermal hysteresis (2)	ΔT_A = –40°C to 125°C			0.08%			0.08%		—

(1) The overtemperature limit for Reverse Breakdown Voltage Tolerance is defined as the room temperature Reverse Breakdown Voltage Tolerance ±[($\Delta V_R/\Delta T$)(maxΔT)(V_R)]. Where, $\Delta V_R/\Delta T$ is the V_R temperature coefficient, maxΔT is the maximum difference in temperature from the reference point of 25°C to T_{MIN} or T_{MAX}, and V_R is the reverse breakdown voltage. The total overtemperature tolerance for the different grades in the industrial temperature range where maxΔT = 65°C is shown below:
A-grade: ±0.75% = ±0.1% ±100 ppm/°C × 65°C
B-grade: ±0.85% = ±0.2% ±100 ppm/°C × 65°C
C-grade: ±1.15% = ±0.5% ±100 ppm/°C × 65°C
D-grade: ±1.98% = ±1.0% ±150 ppm/°C × 65°C
The total overtemperature tolerance for the different grades in the extended temperature range where max ΔT = 100 °C is shown below:
C-grade: ±1.5% = ±0.5% ±100 ppm/°C × 100°C
D-grade: ±2.5% = ±1.0% ±150 ppm/°C × 100°C
Therefore, as an example, the A-grade 2.5-V LM4040 has an overtemperature Reverse Breakdown Voltage tolerance of ±2.5 V × 0.75% = ±19 mV.

(2) Thermal hysteresis is defined as the difference in voltage measured at 25°C after cycling to temperature –40°C and the 25°C measurement after cycling to temperature 125°C.

Copyright © 2005–2017, Texas Instruments Incorporated

6.16 LM4040A50I, LM4040B50I Electrical Characteristics

at industrial temperature range, full-range T_A = –40°C to 85°C (unless otherwise noted)

PARAMETER		TEST CONDITIONS	T_A	LM4040A50I			LM4040B50I			UNIT
				MIN	TYP	MAX	MIN	TYP	MAX	
V_Z	Reverse breakdown voltage	I_Z = 100 μA	25°C		5			5		V
ΔV_Z	Reverse breakdown voltage tolerance	I_Z = 100 μA	25°C	–5		5	–10		10	mV
			Full range	–38		38	–43		43	
$I_{Z,min}$	Minimum cathode current		25°C		65	89		65	89	μA
			Full range			95			95	
α_{VZ}	Average temperature coefficient of reverse breakdown voltage (1)	I_Z = 10 mA	25°C		±30			±30		ppm/°C
		I_Z = 1 mA	25°C		±20			±20		
			Full range			±100			±100	
		I_Z = 100 μA	25°C		±20			±20		
$\frac{\Delta V_Z}{\Delta I_Z}$	Reverse breakdown voltage change with cathode current change	$I_{Z,min} < I_Z < 1$ mA	25°C		0.5	1		0.5	1	mV
			Full range			1.4			1.4	
		1 mA < I_Z < 15 mA	25°C		3.5	8		3.5	8	
			Full range			12			12	
Z_Z	Reverse dynamic impedance	I_Z = 1 mA, f = 120 Hz, I_{AC} = 0.1 I_Z	25°C		0.5	1.1		0.5	1.1	Ω
e_N	Wideband noise	I_Z = 100 μA, 10 Hz ≤ f ≤ 10 kHz	25°C		80			80		μV_{RMS}
	Long-term stability of reverse breakdown voltage	t = 1000 h, T_A = 25°C ± 0.1°C, I_Z = 100 μA			120			120		ppm
V_{HYST}	Thermal hysteresis (2)	ΔT_A = –40°C to 125°C			0.08%			0.08%		—

(1) The overtemperature limit for Reverse Breakdown Voltage Tolerance is defined as the room temperature Reverse Breakdown Voltage Tolerance ±[($\Delta V_R/\Delta T$)(maxΔT)(V_R)]. Where, $\Delta V_R/\Delta T$ is the V_R temperature coefficient, maxΔT is the maximum difference in temperature from the reference point of 25°C to T_{MIN} or T_{MAX}, and V_R is the reverse breakdown voltage. The total overtemperature tolerance for the different grades in the industrial temperature range where maxΔT = 65°C is shown below:
A-grade: ±0.75% = ±0.1% ±100 ppm/°C × 65°C
B-grade: ±0.85% = ±0.2% ±100 ppm/°C × 65°C
C-grade: ±1.15% = ±0.5% ±100 ppm/°C × 65°C
D-grade: ±1.98% = ±1.0% ±150 ppm/°C × 65°C
The total overtemperature tolerance for the different grades in the extended temperature range where max ΔT = 100 °C is shown below:
C-grade: ±1.5% = ±0.5% ±100 ppm/°C × 100°C
D-grade: ±2.5% = ±1.0% ±150 ppm/°C × 100°C
Therefore, as an example, the A-grade 2.5-V LM4040 has an overtemperature Reverse Breakdown Voltage tolerance of ±2.5 V × 0.75% = ±19 mV.

(2) Thermal hysteresis is defined as the difference in voltage measured at 25°C after cycling to temperature –40°C and the 25°C measurement after cycling to temperature 125°C.

6.17 LM4040C50I, LM4040D50I Electrical Characteristics

at industrial temperature range, full-range T_A = –40°C to 85°C (unless otherwise noted)

PARAMETER		TEST CONDITIONS	T_A	LM4040C50I			LM4040D50I			UNIT
				MIN	TYP	MAX	MIN	TYP	MAX	
V_Z	Reverse breakdown voltage	I_Z = 100 μA	25°C		5			5		V
ΔV_Z	Reverse breakdown voltage tolerance	I_Z = 100 μA	25°C	–25		25	–50		50	mV
			Full range	–58		58	–99		99	
$I_{Z,min}$	Minimum cathode current		25°C		65	89		65	89	μA
			Full range			95			95	
α_{VZ}	Average temperature coefficient of reverse breakdown voltage (1)	I_Z = 10 mA	25°C		±30			±30		ppm/°C
		I_Z = 1 mA	25°C		±20			±20		
			Full range			±100			±150	
		I_Z = 100 μA	25°C		±20			±20		
$\frac{\Delta V_Z}{\Delta I_Z}$	Reverse breakdown voltage change with cathode current change	$I_{Z,min} < I_Z < 1$ mA	25°C		0.5	1		0.5	1.3	mV
			Full range			1.4			1.8	
		1 mA < I_Z < 15 mA	25°C		3.5	8		3.5	10	
			Full range			12			15	
Z_Z	Reverse dynamic impedance	I_Z = 1 mA, f = 120 Hz, I_{AC} = 0.1 I_Z	25°C		0.5	1.1		0.5	1.5	Ω
e_N	Wideband noise	I_Z = 100 μA, 10 Hz ≤ f ≤ 10 kHz	25°C		80			80		μV_{RMS}
	Long-term stability of reverse breakdown voltage	t = 1000 h, T_A = 25°C ± 0.1°C, I_Z = 100 μA			120			120		ppm
V_{HYST}	Thermal hysteresis (2)	ΔT_A = –40°C to 125°C			0.08%			0.08%		—

(1) The overtemperature limit for Reverse Breakdown Voltage Tolerance is defined as the room temperature Reverse Breakdown Voltage Tolerance ±[($\Delta V_R/\Delta T$)(maxΔT)(V_R)]. Where, $\Delta V_R/\Delta T$ is the V_R temperature coefficient, maxΔT is the maximum difference in temperature from the reference point of 25°C to T_{MIN} or T_{MAX}, and V_R is the reverse breakdown voltage. The total overtemperature tolerance for the different grades in the industrial temperature range where maxΔT = 65°C is shown below:
A-grade: ±0.75% = ±0.1% ±100 ppm/°C × 65°C
B-grade: ±0.85% = ±0.2% ±100 ppm/°C × 65°C
C-grade: ±1.15% = ±0.5% ±100 ppm/°C × 65°C
D-grade: ±1.98% = ±1.0% ±150 ppm/°C × 65°C
The total overtemperature tolerance for the different grades in the extended temperature range where max ΔT = 100 °C is shown below:
C-grade: ±1.5% = ±0.5% ±100 ppm/°C × 100°C
D-grade: ±2.5% = ±1.0% ±150 ppm/°C × 100°C
Therefore, as an example, the A-grade 2.5-V LM4040 has an overtemperature Reverse Breakdown Voltage tolerance of ±2.5 V × 0.75% = ±19 mV.

(2) Thermal hysteresis is defined as the difference in voltage measured at 25°C after cycling to temperature –40°C and the 25°C measurement after cycling to temperature 125°C.

Copyright © 2005–2017, Texas Instruments Incorporated

6.18 LM4040C50Q, LM4040D50Q Electrical Characteristics

at extended temperature range, full-range T_A = –40°C to 125°C (unless otherwise noted)

PARAMETER		TEST CONDITIONS	T_A	LM4040C50Q			LM4040D50Q			UNIT
				MIN	TYP	MAX	MIN	TYP	MAX	
V_Z	Reverse breakdown voltage	I_Z = 100 μA	25°C		5			5		V
ΔV_Z	Reverse breakdown voltage tolerance	I_Z = 100 μA	25°C	–25		25	–50		50	mV
			Full range	–75		75	–125		125	
$I_{Z,min}$	Minimum cathode current		25°C		65	89		65	89	μA
			Full range			95			95	
α_{VZ}	Average temperature coefficient of reverse breakdown voltage (1)	I_Z = 10 mA	25°C		±30			±30		ppm/°C
		I_Z = 1 mA	25°C		±20			±20		
			Full range			±100			±150	
		I_Z = 100 μA	25°C		±20			±20		
$\frac{\Delta V_Z}{\Delta I_Z}$	Reverse breakdown voltage change with cathode current change	$I_{Z,min} < I_Z < 1$ mA	25°C		0.5	1		0.5	1	mV
			Full range			1.4			1.8	
		1 mA < I_Z < 15 mA	25°C		3.5	8		3.5	8	
			Full range			12			12	
Z_Z	Reverse dynamic impedance	I_Z = 1 mA, f = 120 Hz, I_{AC} = 0.1 I_Z	25°C		0.5	1.1		0.5	1.1	Ω
e_N	Wideband noise	I_Z = 100 μA, 10 Hz ≤ f ≤ 10 kHz	25°C		80			80		μV_{RMS}
	Long-term stability of reverse breakdown voltage	t = 1000 h, T_A = 25°C ± 0.1°C, I_Z = 100 μA			120			120		ppm
V_{HYST}	Thermal hysteresis (2)	ΔT_A = –40°C to 125°C			0.08%			0.08%		—

(1) The overtemperature limit for Reverse Breakdown Voltage Tolerance is defined as the room temperature Reverse Breakdown Voltage Tolerance ±[($\Delta V_R/\Delta T$)(maxΔT)(V_R)]. Where, $\Delta V_R/\Delta T$ is the V_R temperature coefficient, maxΔT is the maximum difference in temperature from the reference point of 25°C to T_{MIN} or T_{MAX}, and V_R is the reverse breakdown voltage. The total overtemperature tolerance for the different grades in the industrial temperature range where maxΔT = 65°C is shown below:
A-grade: ±0.75% = ±0.1% ±100 ppm/°C × 65°C
B-grade: ±0.85% = ±0.2% ±100 ppm/°C × 65°C
C-grade: ±1.15% = ±0.5% ±100 ppm/°C × 65°C
D-grade: ±1.98% = ±1.0% ±150 ppm/°C × 65°C
The total overtemperature tolerance for the different grades in the extended temperature range where max ΔT = 100 °C is shown below:
C-grade: ±1.5% = ±0.5% ±100 ppm/°C × 100°C
D-grade: ±2.5% = ±1.0% ±150 ppm/°C × 100°C
Therefore, as an example, the A-grade 2.5-V LM4040 has an overtemperature Reverse Breakdown Voltage tolerance of ±2.5 V × 0.75% = ±19 mV.

(2) Thermal hysteresis is defined as the difference in voltage measured at 25°C after cycling to temperature –40°C and the 25°C measurement after cycling to temperature 125°C.

6.19 LM4040A82I, LM4040B82I Electrical Characteristics

at industrial temperature range, full-range T_A = –40°C to 85°C (unless otherwise noted)

PARAMETER		TEST CONDITIONS	T_A	LM4040A82I			LM4040B82I			UNIT
				MIN	TYP	MAX	MIN	TYP	MAX	
V_Z	Reverse breakdown voltage	I_Z = 150 μA	25°C		8.192			8.192		V
ΔV_Z	Reverse breakdown voltage tolerance	I_Z = 150 μA	25°C	–8.2		8.2	–16		16	mV
			Full range	–61		61	–70		70	
$I_{Z,min}$	Minimum cathode current		25°C		67	106		67	106	μA
			Full range			110			110	
α_{VZ}	Average temperature coefficient of reverse breakdown voltage (1)	I_Z = 10 mA	25°C		±40			±40		ppm/°C
		I_Z = 1 mA	25°C		±20			±20		
			Full range			±100			±100	
		I_Z = 150 μA	25°C		±20			±20		
$\frac{\Delta V_Z}{\Delta I_Z}$	Reverse breakdown voltage change with cathode current change	$I_{Z,min} < I_Z < 1$ mA	25°C		0.6	1.3		0.6	1.6	mV
			Full range			2.5			2.5	
		1 mA < I_Z < 15 mA	25°C		7	10		7	10	
			Full range			18			18	
Z_Z	Reverse dynamic impedance	I_Z = 1 mA, f = 120 Hz, I_{AC} = 0.1 I_Z	25°C		0.6	1.5		0.6	1.5	Ω
e_N	Wideband noise	I_Z = 150 μA, 10 Hz ≤ f ≤ 10 kHz	25°C		130			130		μV_{RMS}
	Long-term stability of reverse breakdown voltage	t = 1000 h, T_A = 25°C ± 0.1°C, I_Z = 150 μA			120			120		ppm
V_{HYST}	Thermal hysteresis (2)	ΔT_A = –40°C to 125°C			0.08%			0.08%		—

(1) The overtemperature limit for Reverse Breakdown Voltage Tolerance is defined as the room temperature Reverse Breakdown Voltage Tolerance ±[($\Delta V_R/\Delta T$)(maxΔT)(V_R)]. Where, $\Delta V_R/\Delta T$ is the V_R temperature coefficient, maxΔT is the maximum difference in temperature from the reference point of 25°C to T_{MIN} or T_{MAX}, and V_R is the reverse breakdown voltage. The total overtemperature tolerance for the different grades in the industrial temperature range where maxΔT = 65°C is shown below:
A-grade: ±0.75% = ±0.1% ±100 ppm/°C × 65°C
B-grade: ±0.85% = ±0.2% ±100 ppm/°C × 65°C
C-grade: ±1.15% = ±0.5% ±100 ppm/°C × 65°C
D-grade: ±1.98% = ±1.0% ±150 ppm/°C × 65°C
The total overtemperature tolerance for the different grades in the extended temperature range where max ΔT = 100 °C is shown below:
C-grade: ±1.5% = ±0.5% ±100 ppm/°C × 100°C
D-grade: ±2.5% = ±1.0% ±150 ppm/°C × 100°C
Therefore, as an example, the A-grade 2.5-V LM4040 has an overtemperature Reverse Breakdown Voltage tolerance of ±2.5 V × 0.75% = ±19 mV.

(2) Thermal hysteresis is defined as the difference in voltage measured at 25°C after cycling to temperature –40°C and the 25°C measurement after cycling to temperature 125°C.

Copyright © 2005–2017, Texas Instruments Incorporated

6.20 LM4040C82I, LM4040D82I Electrical Characteristics

at industrial temperature range, full-range T_A = –40°C to 85°C (unless otherwise noted)

PARAMETER		TEST CONDITIONS	T_A	LM4040C82I			LM4040D82I			UNIT
				MIN	TYP	MAX	MIN	TYP	MAX	
V_Z	Reverse breakdown voltage	I_Z = 150 μA	25°C		8.192			8.192		V
ΔV_Z	Reverse breakdown voltage tolerance	I_Z = 150 μA	25°C	–41		41	–82		82	mV
			Full range	–94		94	–162		162	
$I_{Z,min}$	Minimum cathode current		25°C		67	106		67	111	μA
			Full range			110			115	
α_{VZ}	Average temperature coefficient of reverse breakdown voltage (1)	I_Z = 10 mA	25°C		±40			±40		ppm/°C
		I_Z = 1 mA	25°C		±20			±20		
			Full range			±100			±150	
		I_Z = 150 μA	25°C		±20			±20		
$\frac{\Delta V_Z}{\Delta I_Z}$	Reverse breakdown voltage change with cathode current change	$I_{Z,min} < I_Z < 1$ mA	25°C		0.6	1.3		0.6	1.7	mV
			Full range			2.5			3	
		1 mA < I_Z < 15 mA	25°C		7	10		7	15	
			Full range			18			24	
Z_Z	Reverse dynamic impedance	I_Z = 1 mA, f = 120 Hz, I_{AC} = 0.1 I_Z	25°C		0.6	1.5		0.6	1.9	Ω
e_N	Wideband noise	I_Z = 150 μA, 10 Hz ≤ f ≤ 10 kHz	25°C		130			130		μV_{RMS}
	Long-term stability of reverse breakdown voltage	t = 1000 h, T_A = 25°C ± 0.1°C, I_Z = 150 μA			120			120		ppm
V_{HYST}	Thermal hysteresis (2)	ΔT_A = –40°C to 125°C			0.08%			0.08%		—

(1) The overtemperature limit for Reverse Breakdown Voltage Tolerance is defined as the room temperature Reverse Breakdown Voltage Tolerance ±[($\Delta V_R/\Delta T$)(maxΔT)(V_R)]. Where, $\Delta V_R/\Delta T$ is the V_R temperature coefficient, maxΔT is the maximum difference in temperature from the reference point of 25°C to T_{MIN} or T_{MAX}, and V_R is the reverse breakdown voltage. The total overtemperature tolerance for the different grades in the industrial temperature range where maxΔT = 65°C is shown below:
A-grade: ±0.75% = ±0.1% ±100 ppm/°C × 65°C
B-grade: ±0.85% = ±0.2% ±100 ppm/°C × 65°C
C-grade: ±1.15% = ±0.5% ±100 ppm/°C × 65°C
D-grade: ±1.98% = ±1.0% ±150 ppm/°C × 65°C
The total overtemperature tolerance for the different grades in the extended temperature range where max ΔT = 100 °C is shown below:
C-grade: ±1.5% = ±0.5% ±100 ppm/°C × 100°C
D-grade: ±2.5% = ±1.0% ±150 ppm/°C × 100°C
Therefore, as an example, the A-grade 2.5-V LM4040 has an overtemperature Reverse Breakdown Voltage tolerance of ±2.5 V × 0.75% = ±19 mV.

(2) Thermal hysteresis is defined as the difference in voltage measured at 25°C after cycling to temperature –40°C and the 25°C measurement after cycling to temperature 125°C.

6.21 LM4040A10I, LM4040B10I Electrical Characteristics

at industrial temperature range, full-range T_A = –40°C to 85°C (unless otherwise noted)

PARAMETER		TEST CONDITIONS	T_A	LM4040A10I			LM4040B10I			UNIT
				MIN	TYP	MAX	MIN	TYP	MAX	
V_Z	Reverse breakdown voltage	I_Z = 150 μA	25°C		10			10		V
ΔV_Z	Reverse breakdown voltage tolerance	I_Z = 150 μA	25°C	–10		10	–20		20	mV
			Full range	–75		75	–85		85	
$I_{Z,min}$	Minimum cathode current		25°C		75	120		75	120	μA
			Full range			125			125	
α_{VZ}	Average temperature coefficient of reverse breakdown voltage (1)	I_Z = 10 mA	25°C		±40			±40		ppm/°C
		I_Z = 1 mA	25°C		±20			±20		
			Full range			±100			±100	
		I_Z = 150 μA	25°C		±20			±20		
$\frac{\Delta V_Z}{\Delta I_Z}$	Reverse breakdown voltage change with cathode current change	$I_{Z,min} < I_Z < 1$ mA	25°C		0.8	1.5		0.8	1.5	mV
			Full range			3.5			3.5	
		1 mA < I_Z < 15 mA	25°C		8	14		8	14	
			Full range			24			24	
Z_Z	Reverse dynamic impedance	I_Z = 1 mA, f = 120 Hz, I_{AC} = 0.1 I_Z	25°C		0.7	1.7		0.7	1.7	Ω
e_N	Wideband noise	I_Z = 150 μA, 10 Hz ≤ f ≤ 10 kHz	25°C		180			180		μV_{RMS}
	Long-term stability of reverse breakdown voltage	t = 1000 h, T_A = 25°C ± 0.1°C, I_Z = 150 μA			120			120		ppm
V_{HYST}	Thermal hysteresis (2)	ΔT_A = –40°C to 125°C			0.08%			0.08%		—

(1) The overtemperature limit for Reverse Breakdown Voltage Tolerance is defined as the room temperature Reverse Breakdown Voltage Tolerance ±[($\Delta V_R/\Delta T$)(maxΔT)(V_R)]. Where, $\Delta V_R/\Delta T$ is the V_R temperature coefficient, maxΔT is the maximum difference in temperature from the reference point of 25°C to T_{MIN} or T_{MAX}, and V_R is the reverse breakdown voltage. The total overtemperature tolerance for the different grades in the industrial temperature range where maxΔT = 65°C is shown below:
A-grade: ±0.75% = ±0.1% ±100 ppm/°C × 65°C
B-grade: ±0.85% = ±0.2% ±100 ppm/°C × 65°C
C-grade: ±1.15% = ±0.5% ±100 ppm/°C × 65°C
D-grade: ±1.98% = ±1.0% ±150 ppm/°C × 65°C
The total overtemperature tolerance for the different grades in the extended temperature range where max ΔT = 100 °C is shown below:
C-grade: ±1.5% = ±0.5% ±100 ppm/°C × 100°C
D-grade: ±2.5% = ±1.0% ±150 ppm/°C × 100°C
Therefore, as an example, the A-grade 2.5-V LM4040 has an overtemperature Reverse Breakdown Voltage tolerance of ±2.5 V × 0.75% = ±19 mV.

(2) Thermal hysteresis is defined as the difference in voltage measured at 25°C after cycling to temperature –40°C and the 25°C measurement after cycling to temperature 125°C.

Copyright © 2005–2017, Texas Instruments Incorporated

6.22 LM4040C10I, LM4040D10I Electrical Characteristics

at industrial temperature range, full-range T_A = –40°C to 85°C (unless otherwise noted)

PARAMETER		TEST CONDITIONS	T_A	LM4040C10I			LM4040D10I			UNIT
				MIN	TYP	MAX	MIN	TYP	MAX	
V_Z	Reverse breakdown voltage	I_Z = 150 μA	25°C		10			10		V
ΔV_Z	Reverse breakdown voltage tolerance	I_Z = 150 μA	25°C	–50		50	–100		100	mV
			Full range	–115		115	–198		198	
$I_{Z,min}$	Minimum cathode current		25°C		75	120		75	130	μA
			Full range			125			135	
α_{VZ}	Average temperature coefficient of reverse breakdown voltage (1)	I_Z = 10 mA	25°C		±40			±40		ppm/°C
		I_Z = 1 mA	25°C		±20			±20		
			Full range			±100			±150	
		I_Z = 150 μA	25°C		±20			±20		
$\frac{\Delta V_Z}{\Delta I_Z}$	Reverse breakdown voltage change with cathode current change	$I_{Z,min} < I_Z < 1$ mA	25°C		0.8	1.5		0.8	2	mV
			Full range			3.5			4	
		1 mA < I_Z < 15 mA	25°C		8	14		8	18	
			Full range			24			29	
Z_Z	Reverse dynamic impedance	I_Z = 1 mA, f = 120 Hz, I_{AC} = 0.1 I_Z	25°C		0.7	1.7		0.7	2.3	Ω
e_N	Wideband noise	I_Z = 150 μA, 10 Hz ≤ f ≤ 10 kHz	25°C		180			180		μV_{RMS}
	Long-term stability of reverse breakdown voltage	t = 1000 h, T_A = 25°C ± 0.1°C, I_Z = 150 μA			120			120		ppm
V_{HYST}	Thermal hysteresis (2)	ΔT_A = –40°C to 125°C			0.08%			0.08%		—

(1) The overtemperature limit for Reverse Breakdown Voltage Tolerance is defined as the room temperature Reverse Breakdown Voltage Tolerance ±[($\Delta V_R/\Delta T$)(maxΔT)(V_R)]. Where, $\Delta V_R/\Delta T$ is the V_R temperature coefficient, maxΔT is the maximum difference in temperature from the reference point of 25°C to T_{MIN} or T_{MAX}, and V_R is the reverse breakdown voltage. The total overtemperature tolerance for the different grades in the industrial temperature range where maxΔT = 65°C is shown below:
A-grade: ±0.75% = ±0.1% ±100 ppm/°C × 65°C
B-grade: ±0.85% = ±0.2% ±100 ppm/°C × 65°C
C-grade: ±1.15% = ±0.5% ±100 ppm/°C × 65°C
D-grade: ±1.98% = ±1.0% ±150 ppm/°C × 65°C
The total overtemperature tolerance for the different grades in the extended temperature range where max ΔT = 100 °C is shown below:
C-grade: ±1.5% = ±0.5% ±100 ppm/°C × 100°C
D-grade: ±2.5% = ±1.0% ±150 ppm/°C × 100°C
Therefore, as an example, the A-grade 2.5-V LM4040 has an overtemperature Reverse Breakdown Voltage tolerance of ±2.5 V × 0.75% = ±19 mV.

(2) Thermal hysteresis is defined as the difference in voltage measured at 25°C after cycling to temperature –40°C and the 25°C measurement after cycling to temperature 125°C.

6.23 Typical Characteristics

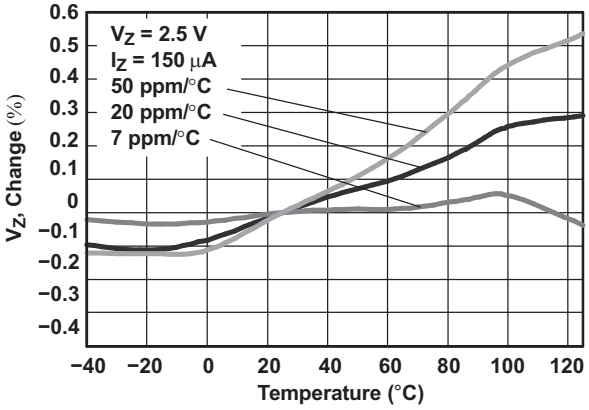

Figure 1. Temperature Drift for Different Average Temperature Coefficients

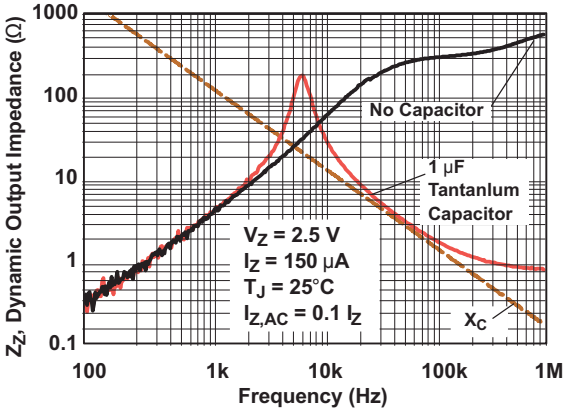

Figure 2. Output Impedance vs Frequency

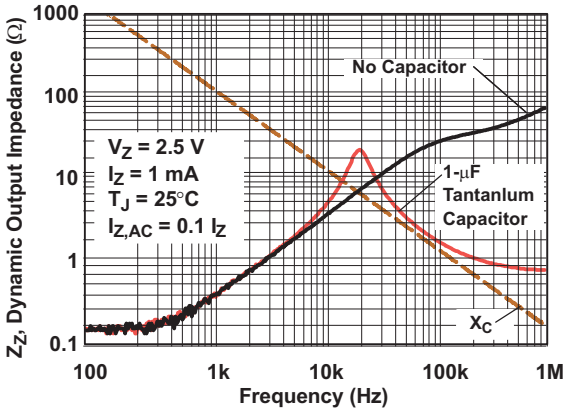

Figure 3. Output Impedance vs Frequency

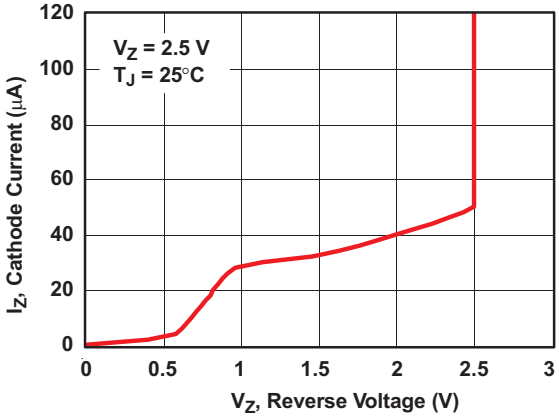

Figure 4. Temperature Drift for Different Average Temperature Coefficient

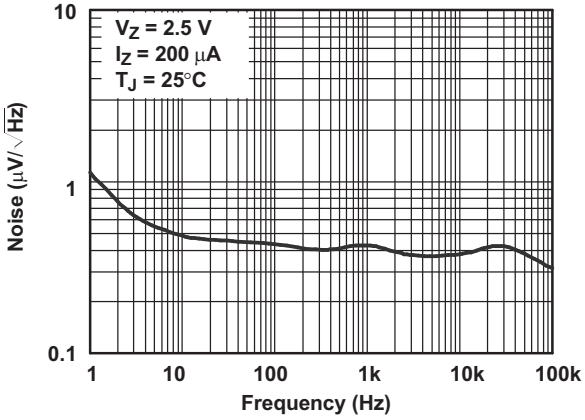

Figure 5. Noise Voltage vs Frequency

Copyright © 2005–2017, Texas Instruments Incorporated

7 Detailed Description

7.1 Overview

The LM4040 is a precision micro-power curvature-corrected bandgap shunt voltage reference. The LM4040 has been designed for stable operation without the need of an external capacitor connected between the "+" pin and the "−" pin. If, however, a bypass capacitor is used, the LM4040 remains stable.

LM4040 offers several fixed reverse breakdown voltages: 2.048 V, 2.500 V, 3.000 V, 4.096 V, 5.000 V, 6.000, 8.192 V, and 10.000 V. The minimum operating current increases from 60 µA for the LM4040-N-2.048 and LM4040-N-2.5 to 100 µA for the 10.0-V LM4040. All versions have a maximum operating current of 15 mA.

Each reverse voltage options can be purchased with initial tolerances (at 25°C) of 0.1%, 0.2%, 0.5% and 1.0%. These reference options are denoted by A (0.1%), B (0.2%), C (0.5%) and D for (1.0%).

The LM4040xxxI devices are characterized for operation from –40°C to 85°C, and the LM4040xxxQ devices are characterized for operation from –40°C to 125°C.

7.2 Functional Block Diagram

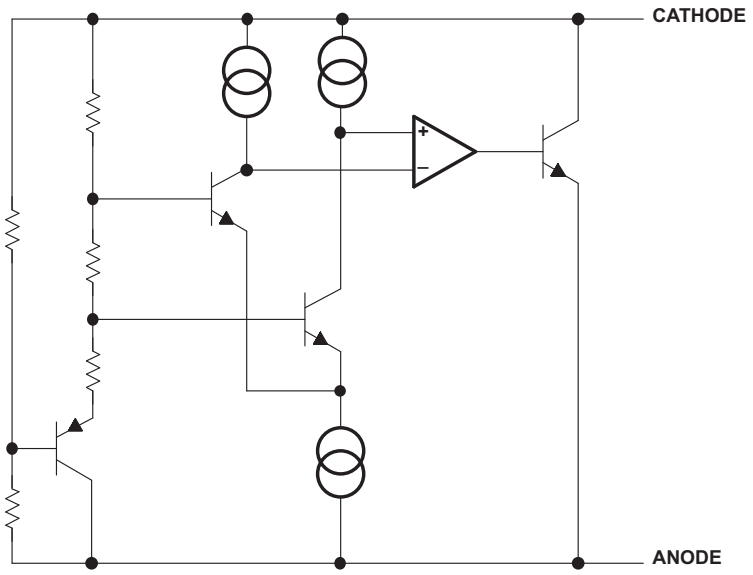

7.3 Feature Description

A temperature compensated band gap voltage reference controls high gain amplifier and shunt pass element to maintain a nearly constant voltage between cathode and anode. Regulation occurs after a minimum current is provided to power the voltage divider and amplifier. Internal frequency compensation provides a stable loop for all capacitor loads. Floating shunt design is useful for both positive and negative regulation applications.

7.4 Device Functional Modes

7.4.1 Shunt Reference

LM4040 will operate in one mode, which is as a fixed voltage reference that cannot be adjusted. LM4040 does offer various Reverse Voltage options that have unique electrical characteristics detailed in the *Specifications* section.

In order for a proper Reverse Voltage to be developed, current must be sourced into the cathode of LM4040. The minimum current needed for proper regulation is denoted in the *Specifications* section as $I_{Z,min}$.

8 Applications and Implementation

NOTE

Information in the following applications sections is not part of the TI component specification, and TI does not warrant its accuracy or completeness. TI's customers are responsible for determining suitability of components for their purposes. Customers should validate and test their design implementation to confirm system functionality.

8.1 Application Information

LM4040 is a well known industry standard device used in several applications and end equipment where a reference is required. Below describes this device being used in a data acquisition system. Analog to Digital conversion systems are the most common applications to use LM4040 due to its low reference tolerance which allows high precision in these systems.

8.2 Typical Applications

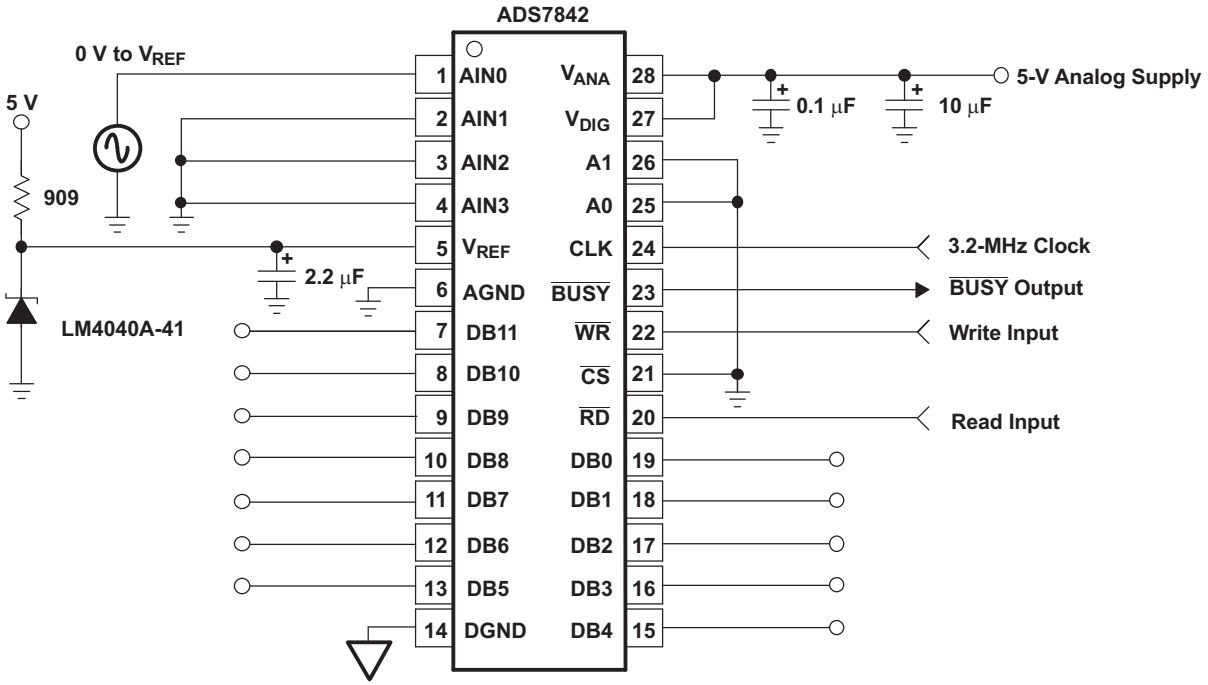

Figure 6. Data-Acquisition Circuit With LM4040x-41

8.2.1 Design Requirements

For this design example, use the parameters listed in Table 1 as the input parameters.

Table 1. Design Parameters

DESIGN PARAMETER	EXAMPLE VALUE
ADC FSR (Full Scale Range)	4.096
ADC Resolution	12 Bits
Supply Voltage	5 V
Cathode Current (Ik)	100 µA

Copyright © 2005–2017, Texas Instruments Incorporated

8.2.2 Detailed Design Procedure

When using LM4040 as a comparator with reference, determine the following:

- Input voltage range
- Reference voltage accuracy
- Output logic input high and low level thresholds
- Current source resistance

8.2.2.1 LM4040 Voltage and Accuracy Choice

When using LM4040 as a reference for an ADC, the ADC's FSR (Full Scale Range), Resolution and LSB must be determined. LSB can be determined by:

$LSB=FSR/(2^N-1)$

With N being the resolution or Number of Bits. FSR and Resolution can be determined by the ADC's datasheet.

Vref can be determined by:

Vref=FSR+LSB

Though modern data converters use calibration techniques to compensate for any error introduced by a Vref's inaccuracy, it is best to use the highest accuracy available. This is due to errors in the calibration method that may allow some non-linearities introduced by the Vref's initial accuracy.

A good example is the LM4040x-41 that is designed to be a cost-effective voltage reference as required in 12-bit data-acquisition systems. For 12-bit systems operating from 5-V supplies (see Figure 6), the LM4040A-41 (4.096 V, 0.01%) only introduces 4 LSBs (4mV) of possible error in a system that consists of 4096 LSBs.

8.2.2.2 Cathode and Load Currents

In a typical shunt-regulator configuration (see Figure 7), an external resistor, R_S, is connected between the supply and the cathode of the LM4040. R_S must be set properly, as it sets the total current available to supply the load (I_L) and bias the LM4040 (I_Z). In all cases, I_Z must stay within a specified range for proper operation of the reference. Taking into consideration one extreme in the variation of the load and supply voltage (maximum I_L and minimum V_S), R_S must be small enough to supply the minimum I_Z required for operation of the regulator, as given by data-sheet parameters. At the other extreme, maximum V_S and minimum I_L, R_S must be large enough to limit I_Z to less than its maximum-rated value of 15 mA.

R_S is calculated according to Equation 1:

$$R_S = \frac{(V_S - V_Z)}{(I_L + I_Z)} \tag{1}$$

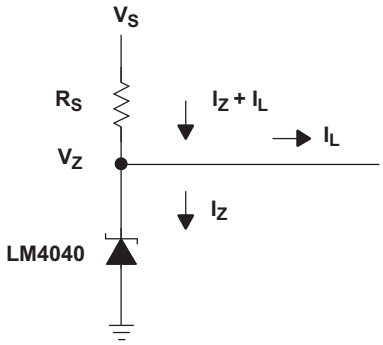

Figure 7. Shunt Regulator

8.2.2.3 Output Capacitor

The LM4040 does not require an output capacitor across cathode and anode for stability. However, if an output bypass capacitor is desired, the LM4040 is designed to be stable with all capacitive loads.

8.2.2.4 SOT-23 Connections

There is a parasitic Schottky diode connected between pins 2 and 3 of the SOT-23 packaged device. Thus, pin 3 of the SOT-23 package must be left floating or connected to pin 2.

8.2.2.5 Start-Up Characteristics

In any data conversion system, start-up characteristics are important, as to determine when it is safe begin conversion based upon a steady and settled reference value. As shown in Figure 9 it is best to allow for >20µs from supply start-up to begin conversion.

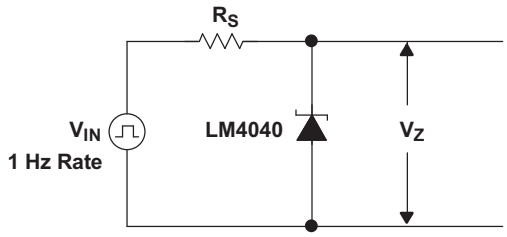

Figure 8. Test Circuit

8.2.3 Application Curve

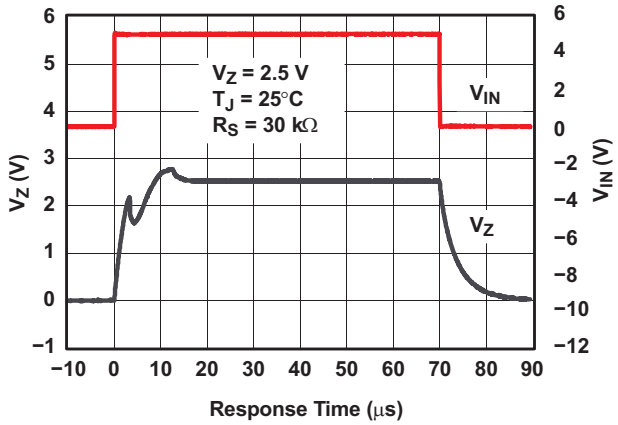

Figure 9. Startup Response

Copyright © 2005–2017, Texas Instruments Incorporated

9 Power Supply Recommendations

In order to not exceed the maximum cathode current, be sure that the supply voltage is current limited.

For applications shunting high currents (15 mA max), pay attention to the cathode and anode trace lengths, adjusting the width of the traces to have the proper current density.

10 Layout

10.1 Layout Guidelines

Figure 10 shows an example of a PCB layout of LM4040XXXDBZ. Some key V_{ref} noise considerations are:

- Connect a low-ESR, 0.1-µF (C_L) ceramic bypass capacitor on the cathode pin node.
- Decouple other active devices in the system per the device specifications.
- Using a solid ground plane helps distribute heat and reduces electromagnetic interference (EMI) noise pickup.
- Place the external components as close to the device as possible. This configuration prevents parasitic errors (such as the Seebeck effect) from occurring.
- Do not run sensitive analog traces in parallel with digital traces. Avoid crossing digital and analog traces if possible and only make perpendicular crossings when absolutely necessary.

10.2 Layout Example

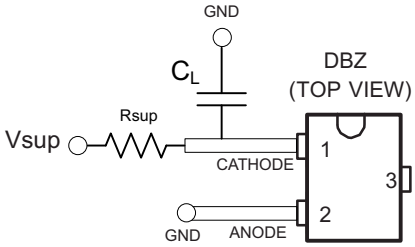

Figure 10. DBZ Layout example

11 Device and Documentation Support

11.1 Related Links

The table below lists quick access links. Categories include technical documents, support and community resources, tools and software, and quick access to order now.

Table 2. Related Links

PARTS	PRODUCT FOLDER	ORDER NOW	TECHNICAL DOCUMENTS	TOOLS & SOFTWARE	SUPPORT & COMMUNITY
LM4040A	Click here	Click here	Click here	Click here	Click here
LM4040B	Click here	Click here	Click here	Click here	Click here
LM4040C	Click here	Click here	Click here	Click here	Click here
LM4040D	Click here	Click here	Click here	Click here	Click here

11.2 Trademarks

All trademarks are the property of their respective owners.

11.3 Electrostatic Discharge Caution

These devices have limited built-in ESD protection. The leads should be shorted together or the device placed in conductive foam during storage or handling to prevent electrostatic damage to the MOS gates.

11.4 Glossary

SLYZ022 — *TI Glossary*.

This glossary lists and explains terms, acronyms, and definitions.

12 Mechanical, Packaging, and Orderable Information

The following pages include mechanical, packaging, and orderable information. This information is the most current data available for the designated devices. This data is subject to change without notice and revision of this document. For browser-based versions of this data sheet, refer to the left-hand navigation.

Copyright © 2005–2017, Texas Instruments Incorporated

PACKAGING INFORMATION

Orderable Device	Status (1)	Package Type	Package Drawing	Pins	Package Qty	Eco Plan (2)	Lead finish/ Ball material (6)	MSL Peak Temp (3)	Op Temp (°C)	Device Marking (4/5)	Samples
LM4040A10IDBZR	ACTIVE	SOT-23	DBZ	3	3000	RoHS & Green	NIPDAU	Level-1-260C-UNLIM	-40 to 85	(4NQ3, 4NQU)	Samples
LM4040A10IDBZRG4	ACTIVE	SOT-23	DBZ	3	3000	RoHS & Green	NIPDAU	Level-1-260C-UNLIM	-40 to 85	(4NQ3, 4NQU)	Samples
LM4040A10IDBZT	ACTIVE	SOT-23	DBZ	3	250	RoHS & Green	NIPDAU	Level-1-260C-UNLIM	-40 to 85	(4NQ3, 4NQU)	Samples
LM4040A10IDCKR	ACTIVE	SC70	DCK	5	3000	RoHS & Green	NIPDAU	Level-1-260C-UNLIM	-40 to 85	PHU	Samples
LM4040A20IDBZR	ACTIVE	SOT-23	DBZ	3	3000	RoHS & Green	NIPDAU	Level-1-260C-UNLIM	-40 to 85	(4MC3, 4MCU)	Samples
LM4040A20IDBZRG4	ACTIVE	SOT-23	DBZ	3	3000	RoHS & Green	NIPDAU	Level-1-260C-UNLIM	-40 to 85	(4MC3, 4MCU)	Samples
LM4040A20IDBZT	ACTIVE	SOT-23	DBZ	3	250	RoHS & Green	NIPDAU	Level-1-260C-UNLIM	-40 to 85	(4MC3, 4MCU)	Samples
LM4040A20IDBZTG4	ACTIVE	SOT-23	DBZ	3	250	RoHS & Green	NIPDAU	Level-1-260C-UNLIM	-40 to 85	(4MC3, 4MCU)	Samples
LM4040A20IDCKR	ACTIVE	SC70	DCK	5	3000	RoHS & Green	NIPDAU	Level-1-260C-UNLIM	-40 to 85	MSU	Samples
LM4040A25IDBZR	ACTIVE	SOT-23	DBZ	3	3000	RoHS & Green	NIPDAU	Level-1-260C-UNLIM	-40 to 85	(4NG3, 4NGU)	Samples
LM4040A25IDBZT	ACTIVE	SOT-23	DBZ	3	250	RoHS & Green	NIPDAU	Level-1-260C-UNLIM	-40 to 85	(4NG3, 4NGU)	Samples
LM4040A25IDBZTG4	ACTIVE	SOT-23	DBZ	3	250	RoHS & Green	NIPDAU	Level-1-260C-UNLIM	-40 to 85	(4NG3, 4NGU)	Samples
LM4040A25IDCKR	ACTIVE	SC70	DCK	5	3000	RoHS & Green	NIPDAU	Level-1-260C-UNLIM	-40 to 85	P2U	Samples
LM4040A30IDBZR	ACTIVE	SOT-23	DBZ	3	3000	RoHS & Green	NIPDAU	Level-1-260C-UNLIM	-40 to 85	(4M63, 4M6U)	Samples
LM4040A30IDBZRG4	ACTIVE	SOT-23	DBZ	3	3000	RoHS & Green	NIPDAU	Level-1-260C-UNLIM	-40 to 85	(4M63, 4M6U)	Samples
LM4040A30IDBZT	ACTIVE	SOT-23	DBZ	3	250	RoHS & Green	NIPDAU	Level-1-260C-UNLIM	-40 to 85	(4M63, 4M6U)	Samples
LM4040A30IDBZTG4	ACTIVE	SOT-23	DBZ	3	250	RoHS & Green	NIPDAU	Level-1-260C-UNLIM	-40 to 85	(4M63, 4M6U)	Samples
LM4040A30IDCKR	ACTIVE	SC70	DCK	5	3000	RoHS & Green	NIPDAU	Level-1-260C-UNLIM	-40 to 85	P9U	Samples
LM4040A30IDCKRE4	ACTIVE	SC70	DCK	5	3000	RoHS & Green	NIPDAU	Level-1-260C-UNLIM	-40 to 85	P9U	Samples
LM4040A41IDBZR	ACTIVE	SOT-23	DBZ	3	3000	RoHS & Green	NIPDAU	Level-1-260C-UNLIM	-40 to 85	(4M23, 4M2U)	Samples

Orderable Device	Status (1)	Package Type	Package Drawing	Pins	Package Qty	Eco Plan (2)	Lead finish/ Ball material (6)	MSL Peak Temp (3)	Op Temp (°C)	Device Marking (4/5)	Samples
LM4040A41IDBZRG4	ACTIVE	SOT-23	DBZ	3	3000	RoHS & Green	NIPDAU	Level-1-260C-UNLIM	-40 to 85	(4M23, 4M2U)	Samples
LM4040A41IDBZT	ACTIVE	SOT-23	DBZ	3	250	RoHS & Green	NIPDAU	Level-1-260C-UNLIM	-40 to 85	(4M23, 4M2U)	Samples
LM4040A41IDBZTG4	ACTIVE	SOT-23	DBZ	3	250	RoHS & Green	NIPDAU	Level-1-260C-UNLIM	-40 to 85	(4M23, 4M2U)	Samples
LM4040A41IDCKR	ACTIVE	SC70	DCK	5	3000	RoHS & Green	NIPDAU	Level-1-260C-UNLIM	-40 to 85	P4U	Samples
LM4040A50IDBZR	ACTIVE	SOT-23	DBZ	3	3000	RoHS & Green	NIPDAU	Level-1-260C-UNLIM	-40 to 85	(4NA3, 4NAU)	Samples
LM4040A50IDBZT	ACTIVE	SOT-23	DBZ	3	250	RoHS & Green	NIPDAU	Level-1-260C-UNLIM	-40 to 85	(4NA3, 4NAU)	Samples
LM4040A50IDBZTG4	ACTIVE	SOT-23	DBZ	3	250	RoHS & Green	NIPDAU	Level-1-260C-UNLIM	-40 to 85	(4NA3, 4NAU)	Samples
LM4040A50IDCKR	ACTIVE	SC70	DCK	5	3000	RoHS & Green	NIPDAU	Level-1-260C-UNLIM	-40 to 85	N5U	Samples
LM4040A82IDBZR	ACTIVE	SOT-23	DBZ	3	3000	RoHS & Green	NIPDAU	Level-1-260C-UNLIM	-40 to 85	(4NL3, 4NLU)	Samples
LM4040A82IDBZT	ACTIVE	SOT-23	DBZ	3	250	RoHS & Green	NIPDAU	Level-1-260C-UNLIM	-40 to 85	(4NL3, 4NLU)	Samples
LM4040A82IDBZTG4	ACTIVE	SOT-23	DBZ	3	250	RoHS & Green	NIPDAU	Level-1-260C-UNLIM	-40 to 85	(4NL3, 4NLU)	Samples
LM4040A82IDCKR	ACTIVE	SC70	DCK	5	3000	RoHS & Green	NIPDAU	Level-1-260C-UNLIM	-40 to 85	PDU	Samples
LM4040B10IDBZR	ACTIVE	SOT-23	DBZ	3	3000	RoHS & Green	NIPDAU	Level-1-260C-UNLIM	-40 to 85	(4NR3, 4NRU)	Samples
LM4040B10IDBZT	ACTIVE	SOT-23	DBZ	3	250	RoHS & Green	NIPDAU	Level-1-260C-UNLIM	-40 to 85	(4NR3, 4NRU)	Samples
LM4040B10IDBZTG4	ACTIVE	SOT-23	DBZ	3	250	RoHS & Green	NIPDAU	Level-1-260C-UNLIM	-40 to 85	(4NR3, 4NRU)	Samples
LM4040B10IDCKR	ACTIVE	SC70	DCK	5	3000	RoHS & Green	NIPDAU	Level-1-260C-UNLIM	-40 to 85	PJU	Samples
LM4040B20IDBZR	ACTIVE	SOT-23	DBZ	3	3000	RoHS & Green	NIPDAU	Level-1-260C-UNLIM	-40 to 85	(4MD3, 4MDU)	Samples
LM4040B20IDBZRG4	ACTIVE	SOT-23	DBZ	3	3000	RoHS & Green	NIPDAU	Level-1-260C-UNLIM	-40 to 85	(4MD3, 4MDU)	Samples
LM4040B20IDBZT	ACTIVE	SOT-23	DBZ	3	250	RoHS & Green	NIPDAU	Level-1-260C-UNLIM	-40 to 85	(4MD3, 4MDU)	Samples
LM4040B20IDBZTG4	ACTIVE	SOT-23	DBZ	3	250	RoHS & Green	NIPDAU	Level-1-260C-UNLIM	-40 to 85	(4MD3, 4MDU)	Samples
LM4040B20IDCKR	ACTIVE	SC70	DCK	5	3000	RoHS & Green	NIPDAU	Level-1-260C-UNLIM	-40 to 85	(MTS, MTU)	Samples

Orderable Device	Status (1)	Package Type	Package Drawing	Pins	Package Qty	Eco Plan (2)	Lead finish/ Ball material (6)	MSL Peak Temp (3)	Op Temp (°C)	Device Marking (4/5)	Samples
LM4040B25IDBZR	ACTIVE	SOT-23	DBZ	3	3000	RoHS & Green	NIPDAU	Level-1-260C-UNLIM	-40 to 85	(4NH3, 4NHU)	Samples
LM4040B25IDBZRG4	ACTIVE	SOT-23	DBZ	3	3000	RoHS & Green	NIPDAU	Level-1-260C-UNLIM	-40 to 85	(4NH3, 4NHU)	Samples
LM4040B25IDBZT	ACTIVE	SOT-23	DBZ	3	250	RoHS & Green	NIPDAU	Level-1-260C-UNLIM	-40 to 85	(4NH3, 4NHU)	Samples
LM4040B25IDBZTG4	ACTIVE	SOT-23	DBZ	3	250	RoHS & Green	NIPDAU	Level-1-260C-UNLIM	-40 to 85	(4NH3, 4NHU)	Samples
LM4040B25IDCKR	ACTIVE	SC70	DCK	5	3000	RoHS & Green	NIPDAU	Level-1-260C-UNLIM	-40 to 85	P3U	Samples
LM4040B30IDBZR	ACTIVE	SOT-23	DBZ	3	3000	RoHS & Green	NIPDAU	Level-1-260C-UNLIM	-40 to 85	(4M73, 4M7U)	Samples
LM4040B30IDBZRG4	ACTIVE	SOT-23	DBZ	3	3000	RoHS & Green	NIPDAU	Level-1-260C-UNLIM	-40 to 85	(4M73, 4M7U)	Samples
LM4040B30IDBZT	ACTIVE	SOT-23	DBZ	3	250	RoHS & Green	NIPDAU	Level-1-260C-UNLIM	-40 to 85	(4M73, 4M7U)	Samples
LM4040B30IDCKR	ACTIVE	SC70	DCK	5	3000	RoHS & Green	NIPDAU	Level-1-260C-UNLIM	-40 to 85	PAU	Samples
LM4040B41IDBZR	ACTIVE	SOT-23	DBZ	3	3000	RoHS & Green	NIPDAU	Level-1-260C-UNLIM	-40 to 85	(4M33, 4M3U)	Samples
LM4040B41IDBZT	ACTIVE	SOT-23	DBZ	3	250	RoHS & Green	NIPDAU	Level-1-260C-UNLIM	-40 to 85	(4M33, 4M3U)	Samples
LM4040B41IDBZTG4	ACTIVE	SOT-23	DBZ	3	250	RoHS & Green	NIPDAU	Level-1-260C-UNLIM	-40 to 85	(4M33, 4M3U)	Samples
LM4040B41IDCKR	ACTIVE	SC70	DCK	5	3000	RoHS & Green	NIPDAU	Level-1-260C-UNLIM	-40 to 85	P5U	Samples
LM4040B50IDBZR	ACTIVE	SOT-23	DBZ	3	3000	RoHS & Green	NIPDAU	Level-1-260C-UNLIM	-40 to 85	(4NB3, 4NBU)	Samples
LM4040B50IDBZRG4	ACTIVE	SOT-23	DBZ	3	3000	RoHS & Green	NIPDAU	Level-1-260C-UNLIM	-40 to 85	(4NB3, 4NBU)	Samples
LM4040B50IDBZT	ACTIVE	SOT-23	DBZ	3	250	RoHS & Green	NIPDAU	Level-1-260C-UNLIM	-40 to 85	(4NB3, 4NBU)	Samples
LM4040B50IDCKR	ACTIVE	SC70	DCK	5	3000	RoHS & Green	NIPDAU	Level-1-260C-UNLIM	-40 to 85	MXU	Samples
LM4040B82IDBZR	ACTIVE	SOT-23	DBZ	3	3000	RoHS & Green	NIPDAU	Level-1-260C-UNLIM	-40 to 85	(4NM3, 4NMU)	Samples
LM4040C10IDBZR	ACTIVE	SOT-23	DBZ	3	3000	RoHS & Green	NIPDAU	Level-1-260C-UNLIM	-40 to 85	(4NS3, 4NSU)	Samples
LM4040C10IDBZT	ACTIVE	SOT-23	DBZ	3	250	RoHS & Green	NIPDAU	Level-1-260C-UNLIM	-40 to 85	(4NS3, 4NSU)	Samples
LM4040C10IDBZTG4	ACTIVE	SOT-23	DBZ	3	250	RoHS & Green	NIPDAU	Level-1-260C-UNLIM	-40 to 85	(4NS3, 4NSU)	Samples

Orderable Device	Status (1)	Package Type	Package Drawing	Pins	Package Qty	Eco Plan (2)	Lead finish/ Ball material (6)	MSL Peak Temp (3)	Op Temp (°C)	Device Marking (4/5)	Samples
LM4040C10IDCKR	ACTIVE	SC70	DCK	5	3000	RoHS & Green	NIPDAU	Level-1-260C-UNLIM	-40 to 85	PKU	Samples
LM4040C10ILP	ACTIVE	TO-92	LP	3	1000	RoHS & Green	SN	N / A for Pkg Type	-40 to 85	NFC10I	Samples
LM4040C10ILPR	ACTIVE	TO-92	LP	3	2000	RoHS & Green	SN	N / A for Pkg Type	-40 to 85	NFC10I	Samples
LM4040C20IDBZR	ACTIVE	SOT-23	DBZ	3	3000	RoHS & Green	NIPDAU	Level-1-260C-UNLIM	-40 to 85	(4MQ3, 4MQU)	Samples
LM4040C20IDBZT	ACTIVE	SOT-23	DBZ	3	250	RoHS & Green	NIPDAU	Level-1-260C-UNLIM	-40 to 85	(4MQ3, 4MQU)	Samples
LM4040C20IDBZTG4	ACTIVE	SOT-23	DBZ	3	250	RoHS & Green	NIPDAU	Level-1-260C-UNLIM	-40 to 85	(4MQ3, 4MQU)	Samples
LM4040C20IDCKR	ACTIVE	SC70	DCK	5	3000	RoHS & Green	NIPDAU	Level-1-260C-UNLIM	-40 to 85	MVU	Samples
LM4040C20ILP	ACTIVE	TO-92	LP	3	1000	RoHS & Green	SN	N / A for Pkg Type	-40 to 85	NFC20I	Samples
LM4040C20ILPE3	ACTIVE	TO-92	LP	3	1000	RoHS & Green	SN	N / A for Pkg Type	-40 to 85	NFC20I	Samples
LM4040C20ILPR	ACTIVE	TO-92	LP	3	2000	RoHS & Green	SN	N / A for Pkg Type	-40 to 85	NFC20I	Samples
LM4040C20QDBZR	ACTIVE	SOT-23	DBZ	3	3000	RoHS & Green	NIPDAU	Level-1-260C-UNLIM	-40 to 125	(4MW3, 4MWU)	Samples
LM4040C20QDBZRG4	ACTIVE	SOT-23	DBZ	3	3000	RoHS & Green	NIPDAU	Level-1-260C-UNLIM	-40 to 125	(4MW3, 4MWU)	Samples
LM4040C20QDBZT	ACTIVE	SOT-23	DBZ	3	250	RoHS & Green	NIPDAU	Level-1-260C-UNLIM	-40 to 125	(4MW3, 4MWU)	Samples
LM4040C20QDBZTG4	ACTIVE	SOT-23	DBZ	3	250	RoHS & Green	NIPDAU	Level-1-260C-UNLIM	-40 to 125	(4MW3, 4MWU)	Samples
LM4040C25IDBZR	ACTIVE	SOT-23	DBZ	3	3000	RoHS & Green	NIPDAU	Level-1-260C-UNLIM	-40 to 85	(4MU3, 4MUU)	Samples
LM4040C25IDBZRG4	ACTIVE	SOT-23	DBZ	3	3000	RoHS & Green	NIPDAU	Level-1-260C-UNLIM	-40 to 85	(4MU3, 4MUU)	Samples
LM4040C25IDBZT	ACTIVE	SOT-23	DBZ	3	250	RoHS & Green	NIPDAU	Level-1-260C-UNLIM	-40 to 85	(4MU3, 4MUU)	Samples
LM4040C25IDBZTG4	ACTIVE	SOT-23	DBZ	3	250	RoHS & Green	NIPDAU	Level-1-260C-UNLIM	-40 to 85	(4MU3, 4MUU)	Samples
LM4040C25IDCKR	ACTIVE	SC70	DCK	5	3000	RoHS & Green	NIPDAU	Level-1-260C-UNLIM	-40 to 85	MUU	Samples
LM4040C25IDCKT	ACTIVE	SC70	DCK	5	250	RoHS & Green	NIPDAU	Level-1-260C-UNLIM	-40 to 85	MUU	Samples
LM4040C25IDCKTE4	ACTIVE	SC70	DCK	5	250	RoHS & Green	NIPDAU	Level-1-260C-UNLIM	-40 to 85	MUU	Samples

Orderable Device	Status (1)	Package Type	Package Drawing	Pins	Package Qty	Eco Plan (2)	Lead finish/ Ball material (6)	MSL Peak Temp (3)	Op Temp (°C)	Device Marking (4/5)	Samples
LM4040C25ILP	ACTIVE	TO-92	LP	3	1000	RoHS & Green	SN	N / A for Pkg Type	-40 to 85	NFC25I	Samples
LM4040C25ILPR	ACTIVE	TO-92	LP	3	2000	RoHS & Green	SN	N / A for Pkg Type	-40 to 85	NFC25I	Samples
LM4040C25QDBZR	ACTIVE	SOT-23	DBZ	3	3000	RoHS & Green	NIPDAU	Level-1-260C-UNLIM	-40 to 125	(4MA3, 4MAU)	Samples
LM4040C25QDBZRG4	ACTIVE	SOT-23	DBZ	3	3000	RoHS & Green	NIPDAU	Level-1-260C-UNLIM	-40 to 125	(4MA3, 4MAU)	Samples
LM4040C25QDBZT	ACTIVE	SOT-23	DBZ	3	250	RoHS & Green	NIPDAU	Level-1-260C-UNLIM	-40 to 125	(4MA3, 4MAU)	Samples
LM4040C25QDBZTG4	ACTIVE	SOT-23	DBZ	3	250	RoHS & Green	NIPDAU	Level-1-260C-UNLIM	-40 to 125	(4MA3, 4MAU)	Samples
LM4040C30IDBZR	ACTIVE	SOT-23	DBZ	3	3000	RoHS & Green	NIPDAU	Level-1-260C-UNLIM	-40 to 85	(4M83, 4M8U)	Samples
LM4040C30IDBZRG4	ACTIVE	SOT-23	DBZ	3	3000	RoHS & Green	NIPDAU	Level-1-260C-UNLIM	-40 to 85	(4M83, 4M8U)	Samples
LM4040C30IDBZT	ACTIVE	SOT-23	DBZ	3	250	RoHS & Green	NIPDAU	Level-1-260C-UNLIM	-40 to 85	(4M83, 4M8U)	Samples
LM4040C30IDBZTG4	ACTIVE	SOT-23	DBZ	3	250	RoHS & Green	NIPDAU	Level-1-260C-UNLIM	-40 to 85	(4M83, 4M8U)	Samples
LM4040C30IDCKR	ACTIVE	SC70	DCK	5	3000	RoHS & Green	NIPDAU	Level-1-260C-UNLIM	-40 to 85	PBU	Samples
LM4040C30ILP	ACTIVE	TO-92	LP	3	1000	RoHS & Green	SN	N / A for Pkg Type	-40 to 85	NFC30I	Samples
LM4040C30ILPE3	ACTIVE	TO-92	LP	3	1000	RoHS & Green	SN	N / A for Pkg Type	-40 to 85	NFC30I	Samples
LM4040C30ILPR	ACTIVE	TO-92	LP	3	2000	RoHS & Green	SN	N / A for Pkg Type	-40 to 85	NFC30I	Samples
LM4040C30QDBZR	ACTIVE	SOT-23	DBZ	3	3000	RoHS & Green	NIPDAU	Level-1-260C-UNLIM	-40 to 125	(4NJ3, 4NJU)	Samples
LM4040C30QDBZT	ACTIVE	SOT-23	DBZ	3	250	RoHS & Green	NIPDAU	Level-1-260C-UNLIM	-40 to 125	(4NJ3, 4NJU)	Samples
LM4040C41IDBZR	ACTIVE	SOT-23	DBZ	3	3000	RoHS & Green	NIPDAU	Level-1-260C-UNLIM	-40 to 85	(4M43, 4M4U)	Samples
LM4040C41IDBZRG4	ACTIVE	SOT-23	DBZ	3	3000	RoHS & Green	NIPDAU	Level-1-260C-UNLIM	-40 to 85	(4M43, 4M4U)	Samples
LM4040C41IDBZT	ACTIVE	SOT-23	DBZ	3	250	RoHS & Green	NIPDAU	Level-1-260C-UNLIM	-40 to 85	(4M43, 4M4U)	Samples
LM4040C41IDBZTG4	ACTIVE	SOT-23	DBZ	3	250	RoHS & Green	NIPDAU	Level-1-260C-UNLIM	-40 to 85	(4M43, 4M4U)	Samples
LM4040C41IDCKR	ACTIVE	SC70	DCK	5	3000	RoHS & Green	NIPDAU	Level-1-260C-UNLIM	-40 to 85	P6U	Samples

Orderable Device	Status (1)	Package Type	Package Drawing	Pins	Package Qty	Eco Plan (2)	Lead finish/ Ball material (6)	MSL Peak Temp (3)	Op Temp (°C)	Device Marking (4/5)	Samples
LM4040C41ILP	ACTIVE	TO-92	LP	3	1000	RoHS & Green	SN	N / A for Pkg Type	-40 to 85	NFC41I	Samples
LM4040C41ILPR	ACTIVE	TO-92	LP	3	2000	RoHS & Green	SN	N / A for Pkg Type	-40 to 85	NFC41I	Samples
LM4040C50IDBZR	ACTIVE	SOT-23	DBZ	3	3000	RoHS & Green	NIPDAU	Level-1-260C-UNLIM	-40 to 85	(4NC3, 4NCU)	Samples
LM4040C50IDBZRG4	ACTIVE	SOT-23	DBZ	3	3000	RoHS & Green	NIPDAU	Level-1-260C-UNLIM	-40 to 85	(4NC3, 4NCU)	Samples
LM4040C50IDBZT	ACTIVE	SOT-23	DBZ	3	250	RoHS & Green	NIPDAU	Level-1-260C-UNLIM	-40 to 85	(4NC3, 4NCU)	Samples
LM4040C50IDBZTG4	ACTIVE	SOT-23	DBZ	3	250	RoHS & Green	NIPDAU	Level-1-260C-UNLIM	-40 to 85	(4NC3, 4NCU)	Samples
LM4040C50IDCKR	ACTIVE	SC70	DCK	5	3000	RoHS & Green	NIPDAU	Level-1-260C-UNLIM	-40 to 85	MZU	Samples
LM4040C50ILP	ACTIVE	TO-92	LP	3	1000	RoHS & Green	SN	N / A for Pkg Type	-40 to 85	NFC50I	Samples
LM4040C50ILPE3	ACTIVE	TO-92	LP	3	1000	RoHS & Green	SN	N / A for Pkg Type	-40 to 85	NFC50I	Samples
LM4040C50ILPR	ACTIVE	TO-92	LP	3	2000	RoHS & Green	SN	N / A for Pkg Type	-40 to 85	NFC50I	Samples
LM4040C50QDBZR	ACTIVE	SOT-23	DBZ	3	3000	RoHS & Green	NIPDAU	Level-1-260C-UNLIM	-40 to 125	(4NE3, 4NEU)	Samples
LM4040C50QDBZT	ACTIVE	SOT-23	DBZ	3	250	RoHS & Green	NIPDAU	Level-1-260C-UNLIM	-40 to 125	(4NE3, 4NEU)	Samples
LM4040C50QDBZTG4	ACTIVE	SOT-23	DBZ	3	250	RoHS & Green	NIPDAU	Level-1-260C-UNLIM	-40 to 125	(4NE3, 4NEU)	Samples
LM4040C82IDBZR	ACTIVE	SOT-23	DBZ	3	3000	RoHS & Green	NIPDAU	Level-1-260C-UNLIM	-40 to 85	(4NN3, 4NNU)	Samples
LM4040C82IDCKR	ACTIVE	SC70	DCK	5	3000	RoHS & Green	NIPDAU	Level-1-260C-UNLIM	-40 to 85	PFU	Samples
LM4040C82ILP	ACTIVE	TO-92	LP	3	1000	RoHS & Green	SN	N / A for Pkg Type	-40 to 85	NFC82I	Samples
LM4040C82ILPR	ACTIVE	TO-92	LP	3	2000	RoHS & Green	SN	N / A for Pkg Type	-40 to 85	NFC82I	Samples
LM4040D10IDBZR	ACTIVE	SOT-23	DBZ	3	3000	RoHS & Green	NIPDAU	Level-1-260C-UNLIM	-40 to 85	(4NT3, 4NTU)	Samples
LM4040D10IDBZT	ACTIVE	SOT-23	DBZ	3	250	RoHS & Green	NIPDAU	Level-1-260C-UNLIM	-40 to 85	(4NT3, 4NTU)	Samples
LM4040D10IDCKR	ACTIVE	SC70	DCK	5	3000	RoHS & Green	NIPDAU	Level-1-260C-UNLIM	-40 to 85	PLU	Samples
LM4040D10ILP	ACTIVE	TO-92	LP	3	1000	RoHS & Green	SN	N / A for Pkg Type	-40 to 85	NFD10I	Samples

Orderable Device	Status (1)	Package Type	Package Drawing	Pins	Package Qty	Eco Plan (2)	Lead finish/ Ball material (6)	MSL Peak Temp (3)	Op Temp (°C)	Device Marking (4/5)	Samples
LM4040D20IDBZR	ACTIVE	SOT-23	DBZ	3	3000	RoHS & Green	NIPDAU	Level-1-260C-UNLIM	-40 to 85	(4MV3, 4MVU)	Samples
LM4040D20IDBZRG4	ACTIVE	SOT-23	DBZ	3	3000	RoHS & Green	NIPDAU	Level-1-260C-UNLIM	-40 to 85	(4MV3, 4MVU)	Samples
LM4040D20IDBZT	ACTIVE	SOT-23	DBZ	3	250	RoHS & Green	NIPDAU	Level-1-260C-UNLIM	-40 to 85	(4MV3, 4MVU)	Samples
LM4040D20IDBZTG4	ACTIVE	SOT-23	DBZ	3	250	RoHS & Green	NIPDAU	Level-1-260C-UNLIM	-40 to 85	(4MV3, 4MVU)	Samples
LM4040D20IDCKR	ACTIVE	SC70	DCK	5	3000	RoHS & Green	NIPDAU	Level-1-260C-UNLIM	-40 to 85	MWU	Samples
LM4040D20ILPR	ACTIVE	TO-92	LP	3	2000	RoHS & Green	SN	N / A for Pkg Type	-40 to 85	NFD20I	Samples
LM4040D20ILPRE3	ACTIVE	TO-92	LP	3	2000	RoHS & Green	SN	N / A for Pkg Type	-40 to 85	NFD20I	Samples
LM4040D20QDBZR	ACTIVE	SOT-23	DBZ	3	3000	RoHS & Green	NIPDAU	Level-1-260C-UNLIM	-40 to 125	(4MY3, 4MYU)	Samples
LM4040D20QDBZT	ACTIVE	SOT-23	DBZ	3	250	RoHS & Green	NIPDAU	Level-1-260C-UNLIM	-40 to 125	(4MY3, 4MYU)	Samples
LM4040D20QDBZTG4	ACTIVE	SOT-23	DBZ	3	250	RoHS & Green	NIPDAU	Level-1-260C-UNLIM	-40 to 125	(4MY3, 4MYU)	Samples
LM4040D25IDBZR	ACTIVE	SOT-23	DBZ	3	3000	RoHS & Green	NIPDAU	Level-1-260C-UNLIM	-40 to 85	(4ME3, 4MEU)	Samples
LM4040D25IDBZRG4	ACTIVE	SOT-23	DBZ	3	3000	RoHS & Green	NIPDAU	Level-1-260C-UNLIM	-40 to 85	(4ME3, 4MEU)	Samples
LM4040D25IDBZT	ACTIVE	SOT-23	DBZ	3	250	RoHS & Green	NIPDAU	Level-1-260C-UNLIM	-40 to 85	(4ME3, 4MEU)	Samples
LM4040D25IDBZTG4	ACTIVE	SOT-23	DBZ	3	250	RoHS & Green	NIPDAU	Level-1-260C-UNLIM	-40 to 85	(4ME3, 4MEU)	Samples
LM4040D25IDCKR	ACTIVE	SC70	DCK	5	3000	RoHS & Green	NIPDAU	Level-1-260C-UNLIM	-40 to 85	MEU	Samples
LM4040D25IDCKRG4	ACTIVE	SC70	DCK	5	3000	RoHS & Green	NIPDAU	Level-1-260C-UNLIM	-40 to 85	MEU	Samples
LM4040D25IDCKT	ACTIVE	SC70	DCK	5	250	RoHS & Green	NIPDAU	Level-1-260C-UNLIM	-40 to 85	MEU	Samples
LM4040D25ILP	ACTIVE	TO-92	LP	3	1000	RoHS & Green	SN	N / A for Pkg Type	-40 to 85	NFD25I	Samples
LM4040D25ILPR	ACTIVE	TO-92	LP	3	2000	RoHS & Green	SN	N / A for Pkg Type	-40 to 85	NFD25I	Samples
LM4040D25QDBZR	ACTIVE	SOT-23	DBZ	3	3000	RoHS & Green	NIPDAU	Level-1-260C-UNLIM	-40 to 125	(4MB3, 4MBU)	Samples
LM4040D25QDBZRG4	ACTIVE	SOT-23	DBZ	3	3000	RoHS & Green	NIPDAU	Level-1-260C-UNLIM	-40 to 125	(4MB3, 4MBU)	Samples

Orderable Device	Status (1)	Package Type	Package Drawing	Pins	Package Qty	Eco Plan (2)	Lead finish/ Ball material (6)	MSL Peak Temp (3)	Op Temp (°C)	Device Marking (4/5)	Samples
LM4040D25QDBZT	ACTIVE	SOT-23	DBZ	3	250	RoHS & Green	NIPDAU	Level-1-260C-UNLIM	-40 to 125	(4MB3, 4MBU)	Samples
LM4040D25QDBZTG4	ACTIVE	SOT-23	DBZ	3	250	RoHS & Green	NIPDAU	Level-1-260C-UNLIM	-40 to 125	(4MB3, 4MBU)	Samples
LM4040D30IDBZR	ACTIVE	SOT-23	DBZ	3	3000	RoHS & Green	NIPDAU	Level-1-260C-UNLIM	-40 to 85	(4M93, 4M9U)	Samples
LM4040D30IDBZRG4	ACTIVE	SOT-23	DBZ	3	3000	RoHS & Green	NIPDAU	Level-1-260C-UNLIM	-40 to 85	(4M93, 4M9U)	Samples
LM4040D30IDBZT	ACTIVE	SOT-23	DBZ	3	250	RoHS & Green	NIPDAU	Level-1-260C-UNLIM	-40 to 85	(4M93, 4M9U)	Samples
LM4040D30IDBZTG4	ACTIVE	SOT-23	DBZ	3	250	RoHS & Green	NIPDAU	Level-1-260C-UNLIM	-40 to 85	(4M93, 4M9U)	Samples
LM4040D30IDCKR	ACTIVE	SC70	DCK	5	3000	RoHS & Green	NIPDAU	Level-1-260C-UNLIM	-40 to 85	PCU	Samples
LM4040D30ILP	ACTIVE	TO-92	LP	3	1000	RoHS & Green	SN	N / A for Pkg Type	-40 to 85	NFD30I	Samples
LM4040D30ILPR	ACTIVE	TO-92	LP	3	2000	RoHS & Green	SN	N / A for Pkg Type	-40 to 85	NFD30I	Samples
LM4040D30ILPRE3	ACTIVE	TO-92	LP	3	2000	RoHS & Green	SN	N / A for Pkg Type	-40 to 85	NFD30I	Samples
LM4040D30QDBZR	ACTIVE	SOT-23	DBZ	3	3000	RoHS & Green	NIPDAU	Level-1-260C-UNLIM	-40 to 125	(4NK3, 4NKU)	Samples
LM4040D30QDBZRG4	ACTIVE	SOT-23	DBZ	3	3000	RoHS & Green	NIPDAU	Level-1-260C-UNLIM	-40 to 125	(4NK3, 4NKU)	Samples
LM4040D41IDBZR	ACTIVE	SOT-23	DBZ	3	3000	RoHS & Green	NIPDAU	Level-1-260C-UNLIM	-40 to 85	(4M53, 4M5U)	Samples
LM4040D41IDBZRG4	ACTIVE	SOT-23	DBZ	3	3000	RoHS & Green	NIPDAU	Level-1-260C-UNLIM	-40 to 85	(4M53, 4M5U)	Samples
LM4040D41IDBZT	ACTIVE	SOT-23	DBZ	3	250	RoHS & Green	NIPDAU	Level-1-260C-UNLIM	-40 to 85	(4M53, 4M5U)	Samples
LM4040D41IDBZTG4	ACTIVE	SOT-23	DBZ	3	250	RoHS & Green	NIPDAU	Level-1-260C-UNLIM	-40 to 85	(4M53, 4M5U)	Samples
LM4040D41IDCKR	ACTIVE	SC70	DCK	5	3000	RoHS & Green	NIPDAU	Level-1-260C-UNLIM	-40 to 85	P7U	Samples
LM4040D41ILP	ACTIVE	TO-92	LP	3	1000	RoHS & Green	SN	N / A for Pkg Type	-40 to 85	NFD41I	Samples
LM4040D41ILPE3	ACTIVE	TO-92	LP	3	1000	RoHS & Green	SN	N / A for Pkg Type	-40 to 85	NFD41I	Samples
LM4040D41ILPR	ACTIVE	TO-92	LP	3	2000	RoHS & Green	SN	N / A for Pkg Type	-40 to 85	NFD41I	Samples
LM4040D50IDBZR	ACTIVE	SOT-23	DBZ	3	3000	RoHS & Green	NIPDAU	Level-1-260C-UNLIM	-40 to 85	(4ND3, 4NDU)	Samples

Orderable Device	Status (1)	Package Type	Package Drawing	Pins	Package Qty	Eco Plan (2)	Lead finish/ Ball material (6)	MSL Peak Temp (3)	Op Temp (°C)	Device Marking (4/5)	Samples
LM4040D50IDBZRG4	ACTIVE	SOT-23	DBZ	3	3000	RoHS & Green	NIPDAU	Level-1-260C-UNLIM	-40 to 85	(4ND3, 4NDU)	Samples
LM4040D50IDBZT	ACTIVE	SOT-23	DBZ	3	250	RoHS & Green	NIPDAU	Level-1-260C-UNLIM	-40 to 85	(4ND3, 4NDU)	Samples
LM4040D50IDBZTG4	ACTIVE	SOT-23	DBZ	3	250	RoHS & Green	NIPDAU	Level-1-260C-UNLIM	-40 to 85	(4ND3, 4NDU)	Samples
LM4040D50IDCKR	ACTIVE	SC70	DCK	5	3000	RoHS & Green	NIPDAU	Level-1-260C-UNLIM	-40 to 85	M4U	Samples
LM4040D50IDCKRG4	ACTIVE	SC70	DCK	5	3000	RoHS & Green	NIPDAU	Level-1-260C-UNLIM	-40 to 85	M4U	Samples
LM4040D50ILP	ACTIVE	TO-92	LP	3	1000	RoHS & Green	SN	N / A for Pkg Type	-40 to 85	NFD50I	Samples
LM4040D50ILPR	ACTIVE	TO-92	LP	3	2000	RoHS & Green	SN	N / A for Pkg Type	-40 to 85	NFD50I	Samples
LM4040D50ILPRE3	ACTIVE	TO-92	LP	3	2000	RoHS & Green	SN	N / A for Pkg Type	-40 to 85	NFD50I	Samples
LM4040D50QDBZR	ACTIVE	SOT-23	DBZ	3	3000	RoHS & Green	NIPDAU	Level-1-260C-UNLIM	-40 to 125	(4NF3, 4NFU)	Samples
LM4040D50QDBZT	ACTIVE	SOT-23	DBZ	3	250	RoHS & Green	NIPDAU	Level-1-260C-UNLIM	-40 to 125	(4NF3, 4NFU)	Samples
LM4040D82IDBZR	ACTIVE	SOT-23	DBZ	3	3000	RoHS & Green	NIPDAU	Level-1-260C-UNLIM	-40 to 85	(4NP3, 4NPU)	Samples
LM4040D82IDBZT	ACTIVE	SOT-23	DBZ	3	250	RoHS & Green	NIPDAU	Level-1-260C-UNLIM	-40 to 85	(4NP3, 4NPU)	Samples
LM4040D82IDCKR	ACTIVE	SC70	DCK	5	3000	RoHS & Green	NIPDAU	Level-1-260C-UNLIM	-40 to 85	PGU	Samples
LM4040D82ILP	ACTIVE	TO-92	LP	3	1000	RoHS & Green	SN	N / A for Pkg Type	-40 to 85	NFD82I	Samples
LM4040D82ILPR	ACTIVE	TO-92	LP	3	2000	RoHS & Green	SN	N / A for Pkg Type	-40 to 85	NFD82I	Samples

(1) The marketing status values are defined as follows:
ACTIVE: Product device recommended for new designs.
LIFEBUY: TI has announced that the device will be discontinued, and a lifetime-buy period is in effect.
NRND: Not recommended for new designs. Device is in production to support existing customers, but TI does not recommend using this part in a new design.
PREVIEW: Device has been announced but is not in production. Samples may or may not be available.
OBSOLETE: TI has discontinued the production of the device.

(2) **RoHS:** TI defines "RoHS" to mean semiconductor products that are compliant with the current EU RoHS requirements for all 10 RoHS substances, including the requirement that RoHS substance do not exceed 0.1% by weight in homogeneous materials. Where designed to be soldered at high temperatures, "RoHS" products are suitable for use in specified lead-free processes. TI may reference these types of products as "Pb-Free".
RoHS Exempt: TI defines "RoHS Exempt" to mean products that contain lead but are compliant with EU RoHS pursuant to a specific EU RoHS exemption.

Green: TI defines "Green" to mean the content of Chlorine (Cl) and Bromine (Br) based flame retardants meet JS709B low halogen requirements of <=1000ppm threshold. Antimony trioxide based flame retardants must also meet the <=1000ppm threshold requirement.

(3) MSL, Peak Temp. - The Moisture Sensitivity Level rating according to the JEDEC industry standard classifications, and peak solder temperature.

(4) There may be additional marking, which relates to the logo, the lot trace code information, or the environmental category on the device.

(5) Multiple Device Markings will be inside parentheses. Only one Device Marking contained in parentheses and separated by a "~" will appear on a device. If a line is indented then it is a continuation of the previous line and the two combined represent the entire Device Marking for that device.

(6) Lead finish/Ball material - Orderable Devices may have multiple material finish options. Finish options are separated by a vertical ruled line. Lead finish/Ball material values may wrap to two lines if the finish value exceeds the maximum column width.

Important Information and Disclaimer: The information provided on this page represents TI's knowledge and belief as of the date that it is provided. TI bases its knowledge and belief on information provided by third parties, and makes no representation or warranty as to the accuracy of such information. Efforts are underway to better integrate information from third parties. TI has taken and continues to take reasonable steps to provide representative and accurate information but may not have conducted destructive testing or chemical analysis on incoming materials and chemicals. TI and TI suppliers consider certain information to be proprietary, and thus CAS numbers and other limited information may not be available for release.

In no event shall TI's liability arising out of such information exceed the total purchase price of the TI part(s) at issue in this document sold by TI to Customer on an annual basis.

TAPE AND REEL INFORMATION

REEL DIMENSIONS

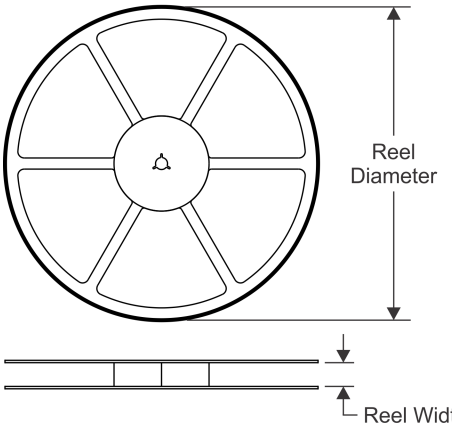

TAPE DIMENSIONS

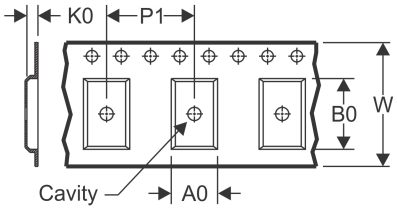

A0	Dimension designed to accommodate the component width
B0	Dimension designed to accommodate the component length
K0	Dimension designed to accommodate the component thickness
W	Overall width of the carrier tape
P1	Pitch between successive cavity centers

QUADRANT ASSIGNMENTS FOR PIN 1 ORIENTATION IN TAPE

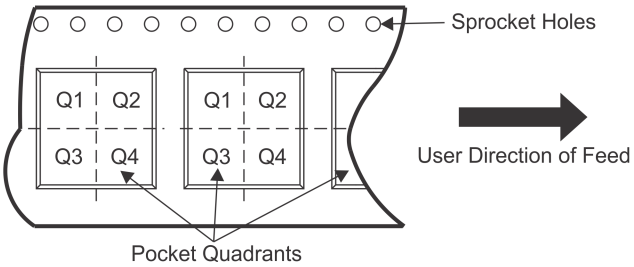

*All dimensions are nominal

Device	Package Type	Package Drawing	Pins	SPQ	Reel Diameter (mm)	Reel Width W1 (mm)	A0 (mm)	B0 (mm)	K0 (mm)	P1 (mm)	W (mm)	Pin1 Quadrant
LM4040A10IDBZR	SOT-23	DBZ	3	3000	178.0	9.2	3.15	2.77	1.22	4.0	8.0	Q3
LM4040A10IDBZR	SOT-23	DBZ	3	3000	179.0	8.4	3.15	2.95	1.22	4.0	8.0	Q3
LM4040A10IDBZT	SOT-23	DBZ	3	250	179.0	8.4	3.15	2.95	1.22	4.0	8.0	Q3
LM4040A10IDBZT	SOT-23	DBZ	3	250	178.0	9.2	3.15	2.77	1.22	4.0	8.0	Q3
LM4040A10IDCKR	SC70	DCK	5	3000	179.0	8.4	2.2	2.5	1.2	4.0	8.0	Q3
LM4040A20IDBZR	SOT-23	DBZ	3	3000	178.0	9.2	3.15	2.77	1.22	4.0	8.0	Q3
LM4040A20IDBZR	SOT-23	DBZ	3	3000	179.0	8.4	3.15	2.95	1.22	4.0	8.0	Q3
LM4040A20IDBZT	SOT-23	DBZ	3	250	178.0	9.2	3.15	2.77	1.22	4.0	8.0	Q3
LM4040A20IDCKR	SC70	DCK	5	3000	179.0	8.4	2.2	2.5	1.2	4.0	8.0	Q3
LM4040A25IDBZR	SOT-23	DBZ	3	3000	178.0	9.2	3.15	2.77	1.22	4.0	8.0	Q3
LM4040A25IDBZR	SOT-23	DBZ	3	3000	179.0	8.4	3.15	2.95	1.22	4.0	8.0	Q3
LM4040A25IDBZT	SOT-23	DBZ	3	250	178.0	9.2	3.15	2.77	1.22	4.0	8.0	Q3
LM4040A25IDBZT	SOT-23	DBZ	3	250	179.0	8.4	3.15	2.95	1.22	4.0	8.0	Q3
LM4040A25IDCKR	SC70	DCK	5	3000	179.0	8.4	2.2	2.5	1.2	4.0	8.0	Q3
LM4040A30IDBZR	SOT-23	DBZ	3	3000	179.0	8.4	3.15	2.95	1.22	4.0	8.0	Q3
LM4040A30IDBZR	SOT-23	DBZ	3	3000	178.0	9.2	3.15	2.77	1.22	4.0	8.0	Q3
LM4040A30IDBZT	SOT-23	DBZ	3	250	178.0	9.2	3.15	2.77	1.22	4.0	8.0	Q3
LM4040A30IDBZT	SOT-23	DBZ	3	250	179.0	8.4	3.15	2.95	1.22	4.0	8.0	Q3

Device	Package Type	Package Drawing	Pins	SPQ	Reel Diameter (mm)	Reel Width W1 (mm)	A0 (mm)	B0 (mm)	K0 (mm)	P1 (mm)	W (mm)	Pin1 Quadrant
LM4040A30IDCKR	SC70	DCK	5	3000	179.0	8.4	2.2	2.5	1.2	4.0	8.0	Q3
LM4040A41IDBZR	SOT-23	DBZ	3	3000	178.0	9.2	3.15	2.77	1.22	4.0	8.0	Q3
LM4040A41IDBZR	SOT-23	DBZ	3	3000	179.0	8.4	3.15	2.95	1.22	4.0	8.0	Q3
LM4040A41IDBZT	SOT-23	DBZ	3	250	178.0	9.2	3.15	2.77	1.22	4.0	8.0	Q3
LM4040A41IDBZT	SOT-23	DBZ	3	250	179.0	8.4	3.15	2.95	1.22	4.0	8.0	Q3
LM4040A41IDCKR	SC70	DCK	5	3000	179.0	8.4	2.2	2.5	1.2	4.0	8.0	Q3
LM4040A50IDBZR	SOT-23	DBZ	3	3000	178.0	9.2	3.15	2.77	1.22	4.0	8.0	Q3
LM4040A50IDBZR	SOT-23	DBZ	3	3000	179.0	8.4	3.15	2.95	1.22	4.0	8.0	Q3
LM4040A50IDBZT	SOT-23	DBZ	3	250	179.0	8.4	3.15	2.95	1.22	4.0	8.0	Q3
LM4040A50IDBZT	SOT-23	DBZ	3	250	178.0	9.2	3.15	2.77	1.22	4.0	8.0	Q3
LM4040A50IDCKR	SC70	DCK	5	3000	179.0	8.4	2.2	2.5	1.2	4.0	8.0	Q3
LM4040A82IDBZR	SOT-23	DBZ	3	3000	178.0	9.2	3.15	2.77	1.22	4.0	8.0	Q3
LM4040A82IDBZT	SOT-23	DBZ	3	250	179.0	8.4	3.15	2.95	1.22	4.0	8.0	Q3
LM4040A82IDBZT	SOT-23	DBZ	3	250	178.0	9.2	3.15	2.77	1.22	4.0	8.0	Q3
LM4040A82IDCKR	SC70	DCK	5	3000	179.0	8.4	2.2	2.5	1.2	4.0	8.0	Q3
LM4040B10IDBZR	SOT-23	DBZ	3	3000	178.0	9.2	3.15	2.77	1.22	4.0	8.0	Q3
LM4040B10IDBZR	SOT-23	DBZ	3	3000	179.0	8.4	3.15	2.95	1.22	4.0	8.0	Q3
LM4040B10IDBZT	SOT-23	DBZ	3	250	178.0	9.2	3.15	2.77	1.22	4.0	8.0	Q3
LM4040B10IDCKR	SC70	DCK	5	3000	179.0	8.4	2.2	2.5	1.2	4.0	8.0	Q3
LM4040B20IDBZR	SOT-23	DBZ	3	3000	178.0	9.2	3.15	2.77	1.22	4.0	8.0	Q3
LM4040B20IDBZR	SOT-23	DBZ	3	3000	179.0	8.4	3.15	2.95	1.22	4.0	8.0	Q3
LM4040B20IDBZT	SOT-23	DBZ	3	250	178.0	9.2	3.15	2.77	1.22	4.0	8.0	Q3
LM4040B20IDBZT	SOT-23	DBZ	3	250	179.0	8.4	3.15	2.95	1.22	4.0	8.0	Q3
LM4040B20IDCKR	SC70	DCK	5	3000	180.0	8.4	2.47	2.3	1.25	4.0	8.0	Q3
LM4040B20IDCKR	SC70	DCK	5	3000	179.0	8.4	2.2	2.5	1.2	4.0	8.0	Q3
LM4040B25IDBZR	SOT-23	DBZ	3	3000	178.0	9.2	3.15	2.77	1.22	4.0	8.0	Q3
LM4040B25IDBZR	SOT-23	DBZ	3	3000	179.0	8.4	3.15	2.95	1.22	4.0	8.0	Q3
LM4040B25IDBZT	SOT-23	DBZ	3	250	178.0	9.2	3.15	2.77	1.22	4.0	8.0	Q3
LM4040B25IDCKR	SC70	DCK	5	3000	179.0	8.4	2.2	2.5	1.2	4.0	8.0	Q3
LM4040B30IDBZR	SOT-23	DBZ	3	3000	178.0	9.2	3.15	2.77	1.22	4.0	8.0	Q3
LM4040B30IDBZR	SOT-23	DBZ	3	3000	179.0	8.4	3.15	2.95	1.22	4.0	8.0	Q3
LM4040B30IDBZT	SOT-23	DBZ	3	250	179.0	8.4	3.15	2.95	1.22	4.0	8.0	Q3
LM4040B30IDBZT	SOT-23	DBZ	3	250	178.0	9.2	3.15	2.77	1.22	4.0	8.0	Q3
LM4040B30IDCKR	SC70	DCK	5	3000	179.0	8.4	2.2	2.5	1.2	4.0	8.0	Q3
LM4040B41IDBZR	SOT-23	DBZ	3	3000	178.0	9.2	3.15	2.77	1.22	4.0	8.0	Q3
LM4040B41IDBZR	SOT-23	DBZ	3	3000	179.0	8.4	3.15	2.95	1.22	4.0	8.0	Q3
LM4040B41IDBZT	SOT-23	DBZ	3	250	178.0	9.2	3.15	2.77	1.22	4.0	8.0	Q3
LM4040B41IDCKR	SC70	DCK	5	3000	179.0	8.4	2.2	2.5	1.2	4.0	8.0	Q3
LM4040B50IDBZR	SOT-23	DBZ	3	3000	179.0	8.4	3.15	2.95	1.22	4.0	8.0	Q3
LM4040B50IDBZR	SOT-23	DBZ	3	3000	178.0	9.2	3.15	2.77	1.22	4.0	8.0	Q3
LM4040B50IDBZT	SOT-23	DBZ	3	250	179.0	8.4	3.15	2.95	1.22	4.0	8.0	Q3
LM4040B50IDBZT	SOT-23	DBZ	3	250	178.0	9.2	3.15	2.77	1.22	4.0	8.0	Q3
LM4040B50IDCKR	SC70	DCK	5	3000	179.0	8.4	2.2	2.5	1.2	4.0	8.0	Q3

Device	Package Type	Package Drawing	Pins	SPQ	Reel Diameter (mm)	Reel Width W1 (mm)	A0 (mm)	B0 (mm)	K0 (mm)	P1 (mm)	W (mm)	Pin1 Quadrant
LM4040B82IDBZR	SOT-23	DBZ	3	3000	178.0	9.2	3.15	2.77	1.22	4.0	8.0	Q3
LM4040C10IDBZR	SOT-23	DBZ	3	3000	178.0	9.2	3.15	2.77	1.22	4.0	8.0	Q3
LM4040C10IDBZR	SOT-23	DBZ	3	3000	179.0	8.4	3.15	2.95	1.22	4.0	8.0	Q3
LM4040C10IDBZT	SOT-23	DBZ	3	250	178.0	9.2	3.15	2.77	1.22	4.0	8.0	Q3
LM4040C10IDCKR	SC70	DCK	5	3000	179.0	8.4	2.2	2.5	1.2	4.0	8.0	Q3
LM4040C20IDBZR	SOT-23	DBZ	3	3000	179.0	8.4	3.15	2.95	1.22	4.0	8.0	Q3
LM4040C20IDBZR	SOT-23	DBZ	3	3000	178.0	9.2	3.15	2.77	1.22	4.0	8.0	Q3
LM4040C20IDBZT	SOT-23	DBZ	3	250	179.0	8.4	3.15	2.95	1.22	4.0	8.0	Q3
LM4040C20IDBZT	SOT-23	DBZ	3	250	178.0	9.2	3.15	2.77	1.22	4.0	8.0	Q3
LM4040C20IDCKR	SC70	DCK	5	3000	179.0	8.4	2.2	2.5	1.2	4.0	8.0	Q3
LM4040C20QDBZR	SOT-23	DBZ	3	3000	179.0	8.4	3.15	2.95	1.22	4.0	8.0	Q3
LM4040C20QDBZR	SOT-23	DBZ	3	3000	178.0	9.2	3.15	2.77	1.22	4.0	8.0	Q3
LM4040C20QDBZT	SOT-23	DBZ	3	250	178.0	9.2	3.15	2.77	1.22	4.0	8.0	Q3
LM4040C20QDBZT	SOT-23	DBZ	3	250	179.0	8.4	3.15	2.95	1.22	4.0	8.0	Q3
LM4040C25IDBZR	SOT-23	DBZ	3	3000	179.0	8.4	3.15	2.95	1.22	4.0	8.0	Q3
LM4040C25IDBZR	SOT-23	DBZ	3	3000	178.0	9.2	3.15	2.77	1.22	4.0	8.0	Q3
LM4040C25IDBZT	SOT-23	DBZ	3	250	178.0	9.2	3.15	2.77	1.22	4.0	8.0	Q3
LM4040C25IDBZT	SOT-23	DBZ	3	250	179.0	8.4	3.15	2.95	1.22	4.0	8.0	Q3
LM4040C25IDCKR	SC70	DCK	5	3000	179.0	8.4	2.2	2.5	1.2	4.0	8.0	Q3
LM4040C25IDCKT	SC70	DCK	5	250	179.0	8.4	2.2	2.5	1.2	4.0	8.0	Q3
LM4040C25QDBZR	SOT-23	DBZ	3	3000	179.0	8.4	3.15	2.95	1.22	4.0	8.0	Q3
LM4040C25QDBZR	SOT-23	DBZ	3	3000	178.0	9.2	3.15	2.77	1.22	4.0	8.0	Q3
LM4040C25QDBZT	SOT-23	DBZ	3	250	178.0	9.2	3.15	2.77	1.22	4.0	8.0	Q3
LM4040C25QDBZT	SOT-23	DBZ	3	250	179.0	8.4	3.15	2.95	1.22	4.0	8.0	Q3
LM4040C30IDBZR	SOT-23	DBZ	3	3000	179.0	8.4	3.15	2.95	1.22	4.0	8.0	Q3
LM4040C30IDBZR	SOT-23	DBZ	3	3000	178.0	9.2	3.15	2.77	1.22	4.0	8.0	Q3
LM4040C30IDBZT	SOT-23	DBZ	3	250	179.0	8.4	3.15	2.95	1.22	4.0	8.0	Q3
LM4040C30IDBZT	SOT-23	DBZ	3	250	178.0	9.2	3.15	2.77	1.22	4.0	8.0	Q3
LM4040C30IDCKR	SC70	DCK	5	3000	179.0	8.4	2.2	2.5	1.2	4.0	8.0	Q3
LM4040C30QDBZR	SOT-23	DBZ	3	3000	178.0	9.2	3.15	2.77	1.22	4.0	8.0	Q3
LM4040C30QDBZR	SOT-23	DBZ	3	3000	179.0	8.4	3.15	2.95	1.22	4.0	8.0	Q3
LM4040C30QDBZT	SOT-23	DBZ	3	250	178.0	9.2	3.15	2.77	1.22	4.0	8.0	Q3
LM4040C41IDBZR	SOT-23	DBZ	3	3000	178.0	9.2	3.15	2.77	1.22	4.0	8.0	Q3
LM4040C41IDBZR	SOT-23	DBZ	3	3000	179.0	8.4	3.15	2.95	1.22	4.0	8.0	Q3
LM4040C41IDBZT	SOT-23	DBZ	3	250	178.0	9.2	3.15	2.77	1.22	4.0	8.0	Q3
LM4040C41IDBZT	SOT-23	DBZ	3	250	179.0	8.4	3.15	2.95	1.22	4.0	8.0	Q3
LM4040C41IDCKR	SC70	DCK	5	3000	179.0	8.4	2.2	2.5	1.2	4.0	8.0	Q3
LM4040C50IDBZR	SOT-23	DBZ	3	3000	178.0	9.2	3.15	2.77	1.22	4.0	8.0	Q3
LM4040C50IDBZR	SOT-23	DBZ	3	3000	179.0	8.4	3.15	2.95	1.22	4.0	8.0	Q3
LM4040C50IDBZT	SOT-23	DBZ	3	250	178.0	9.2	3.15	2.77	1.22	4.0	8.0	Q3
LM4040C50IDCKR	SC70	DCK	5	3000	179.0	8.4	2.2	2.5	1.2	4.0	8.0	Q3
LM4040C50QDBZR	SOT-23	DBZ	3	3000	179.0	8.4	3.15	2.95	1.22	4.0	8.0	Q3
LM4040C50QDBZR	SOT-23	DBZ	3	3000	178.0	9.2	3.15	2.77	1.22	4.0	8.0	Q3

Device	Package Type	Package Drawing	Pins	SPQ	Reel Diameter (mm)	Reel Width W1 (mm)	A0 (mm)	B0 (mm)	K0 (mm)	P1 (mm)	W (mm)	Pin1 Quadrant
LM4040C50QDBZT	SOT-23	DBZ	3	250	179.0	8.4	3.15	2.95	1.22	4.0	8.0	Q3
LM4040C50QDBZT	SOT-23	DBZ	3	250	178.0	9.2	3.15	2.77	1.22	4.0	8.0	Q3
LM4040C82IDBZR	SOT-23	DBZ	3	3000	178.0	9.2	3.15	2.77	1.22	4.0	8.0	Q3
LM4040C82IDBZR	SOT-23	DBZ	3	3000	179.0	8.4	3.15	2.95	1.22	4.0	8.0	Q3
LM4040C82IDCKR	SC70	DCK	5	3000	179.0	8.4	2.2	2.5	1.2	4.0	8.0	Q3
LM4040D10IDBZR	SOT-23	DBZ	3	3000	179.0	8.4	3.15	2.95	1.22	4.0	8.0	Q3
LM4040D10IDBZR	SOT-23	DBZ	3	3000	178.0	9.2	3.15	2.77	1.22	4.0	8.0	Q3
LM4040D10IDBZT	SOT-23	DBZ	3	250	178.0	9.2	3.15	2.77	1.22	4.0	8.0	Q3
LM4040D10IDCKR	SC70	DCK	5	3000	179.0	8.4	2.2	2.5	1.2	4.0	8.0	Q3
LM4040D20IDBZR	SOT-23	DBZ	3	3000	179.0	8.4	3.15	2.95	1.22	4.0	8.0	Q3
LM4040D20IDBZR	SOT-23	DBZ	3	3000	178.0	9.2	3.15	2.77	1.22	4.0	8.0	Q3
LM4040D20IDBZT	SOT-23	DBZ	3	250	178.0	9.2	3.15	2.77	1.22	4.0	8.0	Q3
LM4040D20IDBZT	SOT-23	DBZ	3	250	179.0	8.4	3.15	2.95	1.22	4.0	8.0	Q3
LM4040D20IDCKR	SC70	DCK	5	3000	179.0	8.4	2.2	2.5	1.2	4.0	8.0	Q3
LM4040D20QDBZR	SOT-23	DBZ	3	3000	178.0	9.2	3.15	2.77	1.22	4.0	8.0	Q3
LM4040D20QDBZR	SOT-23	DBZ	3	3000	179.0	8.4	3.15	2.95	1.22	4.0	8.0	Q3
LM4040D20QDBZT	SOT-23	DBZ	3	250	178.0	9.2	3.15	2.77	1.22	4.0	8.0	Q3
LM4040D20QDBZT	SOT-23	DBZ	3	250	179.0	8.4	3.15	2.95	1.22	4.0	8.0	Q3
LM4040D25IDBZR	SOT-23	DBZ	3	3000	179.0	8.4	3.15	2.95	1.22	4.0	8.0	Q3
LM4040D25IDBZR	SOT-23	DBZ	3	3000	178.0	9.2	3.15	2.77	1.22	4.0	8.0	Q3
LM4040D25IDBZT	SOT-23	DBZ	3	250	179.0	8.4	3.15	2.95	1.22	4.0	8.0	Q3
LM4040D25IDBZT	SOT-23	DBZ	3	250	178.0	9.2	3.15	2.77	1.22	4.0	8.0	Q3
LM4040D25IDCKR	SC70	DCK	5	3000	179.0	8.4	2.2	2.5	1.2	4.0	8.0	Q3
LM4040D25IDCKT	SC70	DCK	5	250	179.0	8.4	2.2	2.5	1.2	4.0	8.0	Q3
LM4040D25QDBZR	SOT-23	DBZ	3	3000	178.0	9.2	3.15	2.77	1.22	4.0	8.0	Q3
LM4040D25QDBZR	SOT-23	DBZ	3	3000	179.0	8.4	3.15	2.95	1.22	4.0	8.0	Q3
LM4040D25QDBZT	SOT-23	DBZ	3	250	178.0	9.2	3.15	2.77	1.22	4.0	8.0	Q3
LM4040D25QDBZT	SOT-23	DBZ	3	250	179.0	8.4	3.15	2.95	1.22	4.0	8.0	Q3
LM4040D30IDBZR	SOT-23	DBZ	3	3000	179.0	8.4	3.15	2.95	1.22	4.0	8.0	Q3
LM4040D30IDBZR	SOT-23	DBZ	3	3000	178.0	9.2	3.15	2.77	1.22	4.0	8.0	Q3
LM4040D30IDBZT	SOT-23	DBZ	3	250	179.0	8.4	3.15	2.95	1.22	4.0	8.0	Q3
LM4040D30IDBZT	SOT-23	DBZ	3	250	178.0	9.2	3.15	2.77	1.22	4.0	8.0	Q3
LM4040D30IDCKR	SC70	DCK	5	3000	179.0	8.4	2.2	2.5	1.2	4.0	8.0	Q3
LM4040D30QDBZR	SOT-23	DBZ	3	3000	178.0	9.2	3.15	2.77	1.22	4.0	8.0	Q3
LM4040D30QDBZR	SOT-23	DBZ	3	3000	179.0	8.4	3.15	2.95	1.22	4.0	8.0	Q3
LM4040D41IDBZR	SOT-23	DBZ	3	3000	178.0	9.2	3.15	2.77	1.22	4.0	8.0	Q3
LM4040D41IDBZR	SOT-23	DBZ	3	3000	179.0	8.4	3.15	2.95	1.22	4.0	8.0	Q3
LM4040D41IDBZT	SOT-23	DBZ	3	250	178.0	9.2	3.15	2.77	1.22	4.0	8.0	Q3
LM4040D41IDBZT	SOT-23	DBZ	3	250	179.0	8.4	3.15	2.95	1.22	4.0	8.0	Q3
LM4040D41IDCKR	SC70	DCK	5	3000	179.0	8.4	2.2	2.5	1.2	4.0	8.0	Q3
LM4040D50IDBZR	SOT-23	DBZ	3	3000	179.0	8.4	3.15	2.95	1.22	4.0	8.0	Q3
LM4040D50IDBZR	SOT-23	DBZ	3	3000	178.0	9.2	3.15	2.77	1.22	4.0	8.0	Q3
LM4040D50IDBZT	SOT-23	DBZ	3	250	178.0	9.2	3.15	2.77	1.22	4.0	8.0	Q3

Device	Package Type	Package Drawing	Pins	SPQ	Reel Diameter (mm)	Reel Width W1 (mm)	A0 (mm)	B0 (mm)	K0 (mm)	P1 (mm)	W (mm)	Pin1 Quadrant
LM4040D50IDCKR	SC70	DCK	5	3000	179.0	8.4	2.2	2.5	1.2	4.0	8.0	Q3
LM4040D50QDBZR	SOT-23	DBZ	3	3000	179.0	8.4	3.15	2.95	1.22	4.0	8.0	Q3
LM4040D50QDBZR	SOT-23	DBZ	3	3000	178.0	9.2	3.15	2.77	1.22	4.0	8.0	Q3
LM4040D50QDBZT	SOT-23	DBZ	3	250	178.0	9.2	3.15	2.77	1.22	4.0	8.0	Q3
LM4040D82IDBZR	SOT-23	DBZ	3	3000	179.0	8.4	3.15	2.95	1.22	4.0	8.0	Q3
LM4040D82IDBZR	SOT-23	DBZ	3	3000	178.0	9.2	3.15	2.77	1.22	4.0	8.0	Q3
LM4040D82IDBZT	SOT-23	DBZ	3	250	179.0	8.4	3.15	2.95	1.22	4.0	8.0	Q3
LM4040D82IDBZT	SOT-23	DBZ	3	250	178.0	9.2	3.15	2.77	1.22	4.0	8.0	Q3
LM4040D82IDCKR	SC70	DCK	5	3000	179.0	8.4	2.2	2.5	1.2	4.0	8.0	Q3

TAPE AND REEL BOX DIMENSIONS

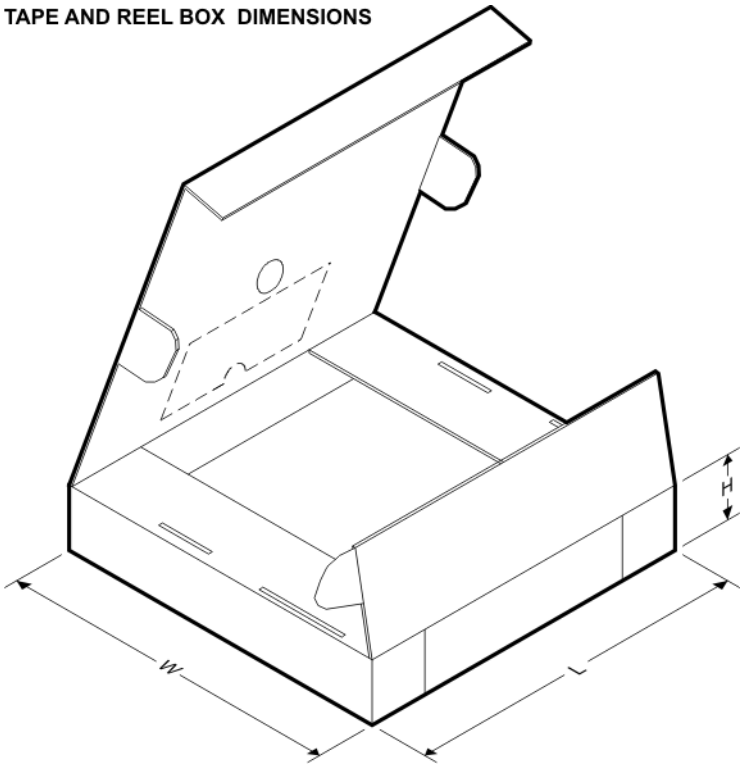

*All dimensions are nominal

Device	Package Type	Package Drawing	Pins	SPQ	Length (mm)	Width (mm)	Height (mm)
LM4040A10IDBZR	SOT-23	DBZ	3	3000	180.0	180.0	18.0
LM4040A10IDBZR	SOT-23	DBZ	3	3000	200.0	183.0	25.0
LM4040A10IDBZT	SOT-23	DBZ	3	250	203.0	203.0	35.0
LM4040A10IDBZT	SOT-23	DBZ	3	250	180.0	180.0	18.0
LM4040A10IDCKR	SC70	DCK	5	3000	203.0	203.0	35.0
LM4040A20IDBZR	SOT-23	DBZ	3	3000	180.0	180.0	18.0
LM4040A20IDBZR	SOT-23	DBZ	3	3000	200.0	183.0	25.0
LM4040A20IDBZT	SOT-23	DBZ	3	250	180.0	180.0	18.0

Device	Package Type	Package Drawing	Pins	SPQ	Length (mm)	Width (mm)	Height (mm)
LM4040A20IDCKR	SC70	DCK	5	3000	200.0	183.0	25.0
LM4040A25IDBZR	SOT-23	DBZ	3	3000	180.0	180.0	18.0
LM4040A25IDBZR	SOT-23	DBZ	3	3000	200.0	183.0	25.0
LM4040A25IDBZT	SOT-23	DBZ	3	250	180.0	180.0	18.0
LM4040A25IDBZT	SOT-23	DBZ	3	250	203.0	203.0	35.0
LM4040A25IDCKR	SC70	DCK	5	3000	200.0	183.0	25.0
LM4040A30IDBZR	SOT-23	DBZ	3	3000	200.0	183.0	25.0
LM4040A30IDBZR	SOT-23	DBZ	3	3000	180.0	180.0	18.0
LM4040A30IDBZT	SOT-23	DBZ	3	250	180.0	180.0	18.0
LM4040A30IDBZT	SOT-23	DBZ	3	250	200.0	183.0	25.0
LM4040A30IDCKR	SC70	DCK	5	3000	200.0	183.0	25.0
LM4040A41IDBZR	SOT-23	DBZ	3	3000	180.0	180.0	18.0
LM4040A41IDBZR	SOT-23	DBZ	3	3000	200.0	183.0	25.0
LM4040A41IDBZT	SOT-23	DBZ	3	250	180.0	180.0	18.0
LM4040A41IDBZT	SOT-23	DBZ	3	250	203.0	203.0	35.0
LM4040A41IDCKR	SC70	DCK	5	3000	200.0	183.0	25.0
LM4040A50IDBZR	SOT-23	DBZ	3	3000	180.0	180.0	18.0
LM4040A50IDBZR	SOT-23	DBZ	3	3000	200.0	183.0	25.0
LM4040A50IDBZT	SOT-23	DBZ	3	250	200.0	183.0	25.0
LM4040A50IDBZT	SOT-23	DBZ	3	250	180.0	180.0	18.0
LM4040A50IDCKR	SC70	DCK	5	3000	200.0	183.0	25.0
LM4040A82IDBZR	SOT-23	DBZ	3	3000	180.0	180.0	18.0
LM4040A82IDBZT	SOT-23	DBZ	3	250	200.0	183.0	25.0
LM4040A82IDBZT	SOT-23	DBZ	3	250	180.0	180.0	18.0
LM4040A82IDCKR	SC70	DCK	5	3000	200.0	183.0	25.0
LM4040B10IDBZR	SOT-23	DBZ	3	3000	180.0	180.0	18.0
LM4040B10IDBZR	SOT-23	DBZ	3	3000	200.0	183.0	25.0
LM4040B10IDBZT	SOT-23	DBZ	3	250	180.0	180.0	18.0
LM4040B10IDCKR	SC70	DCK	5	3000	203.0	203.0	35.0
LM4040B20IDBZR	SOT-23	DBZ	3	3000	180.0	180.0	18.0
LM4040B20IDBZR	SOT-23	DBZ	3	3000	200.0	183.0	25.0
LM4040B20IDBZT	SOT-23	DBZ	3	250	180.0	180.0	18.0
LM4040B20IDBZT	SOT-23	DBZ	3	250	200.0	183.0	25.0
LM4040B20IDCKR	SC70	DCK	5	3000	202.0	201.0	28.0
LM4040B20IDCKR	SC70	DCK	5	3000	200.0	183.0	25.0
LM4040B25IDBZR	SOT-23	DBZ	3	3000	180.0	180.0	18.0
LM4040B25IDBZR	SOT-23	DBZ	3	3000	200.0	183.0	25.0
LM4040B25IDBZT	SOT-23	DBZ	3	250	180.0	180.0	18.0
LM4040B25IDCKR	SC70	DCK	5	3000	200.0	183.0	25.0
LM4040B30IDBZR	SOT-23	DBZ	3	3000	180.0	180.0	18.0
LM4040B30IDBZR	SOT-23	DBZ	3	3000	200.0	183.0	25.0
LM4040B30IDBZT	SOT-23	DBZ	3	250	200.0	183.0	25.0
LM4040B30IDBZT	SOT-23	DBZ	3	250	180.0	180.0	18.0
LM4040B30IDCKR	SC70	DCK	5	3000	200.0	183.0	25.0

Device	Package Type	Package Drawing	Pins	SPQ	Length (mm)	Width (mm)	Height (mm)
LM4040B41IDBZR	SOT-23	DBZ	3	3000	180.0	180.0	18.0
LM4040B41IDBZR	SOT-23	DBZ	3	3000	203.0	203.0	35.0
LM4040B41IDBZT	SOT-23	DBZ	3	250	180.0	180.0	18.0
LM4040B41IDCKR	SC70	DCK	5	3000	200.0	183.0	25.0
LM4040B50IDBZR	SOT-23	DBZ	3	3000	200.0	183.0	25.0
LM4040B50IDBZR	SOT-23	DBZ	3	3000	180.0	180.0	18.0
LM4040B50IDBZT	SOT-23	DBZ	3	250	200.0	183.0	25.0
LM4040B50IDBZT	SOT-23	DBZ	3	250	180.0	180.0	18.0
LM4040B50IDCKR	SC70	DCK	5	3000	200.0	183.0	25.0
LM4040B82IDBZR	SOT-23	DBZ	3	3000	180.0	180.0	18.0
LM4040C10IDBZR	SOT-23	DBZ	3	3000	180.0	180.0	18.0
LM4040C10IDBZR	SOT-23	DBZ	3	3000	200.0	183.0	25.0
LM4040C10IDBZT	SOT-23	DBZ	3	250	180.0	180.0	18.0
LM4040C10IDCKR	SC70	DCK	5	3000	203.0	203.0	35.0
LM4040C20IDBZR	SOT-23	DBZ	3	3000	200.0	183.0	25.0
LM4040C20IDBZR	SOT-23	DBZ	3	3000	180.0	180.0	18.0
LM4040C20IDBZT	SOT-23	DBZ	3	250	203.0	203.0	35.0
LM4040C20IDBZT	SOT-23	DBZ	3	250	180.0	180.0	18.0
LM4040C20IDCKR	SC70	DCK	5	3000	200.0	183.0	25.0
LM4040C20QDBZR	SOT-23	DBZ	3	3000	203.0	203.0	35.0
LM4040C20QDBZR	SOT-23	DBZ	3	3000	180.0	180.0	18.0
LM4040C20QDBZT	SOT-23	DBZ	3	250	180.0	180.0	18.0
LM4040C20QDBZT	SOT-23	DBZ	3	250	200.0	183.0	25.0
LM4040C25IDBZR	SOT-23	DBZ	3	3000	200.0	183.0	25.0
LM4040C25IDBZR	SOT-23	DBZ	3	3000	180.0	180.0	18.0
LM4040C25IDBZT	SOT-23	DBZ	3	250	180.0	180.0	18.0
LM4040C25IDBZT	SOT-23	DBZ	3	250	203.0	203.0	35.0
LM4040C25IDCKR	SC70	DCK	5	3000	200.0	183.0	25.0
LM4040C25IDCKT	SC70	DCK	5	250	200.0	183.0	25.0
LM4040C25QDBZR	SOT-23	DBZ	3	3000	200.0	183.0	25.0
LM4040C25QDBZR	SOT-23	DBZ	3	3000	180.0	180.0	18.0
LM4040C25QDBZT	SOT-23	DBZ	3	250	180.0	180.0	18.0
LM4040C25QDBZT	SOT-23	DBZ	3	250	203.0	203.0	35.0
LM4040C30IDBZR	SOT-23	DBZ	3	3000	200.0	183.0	25.0
LM4040C30IDBZR	SOT-23	DBZ	3	3000	180.0	180.0	18.0
LM4040C30IDBZT	SOT-23	DBZ	3	250	200.0	183.0	25.0
LM4040C30IDBZT	SOT-23	DBZ	3	250	180.0	180.0	18.0
LM4040C30IDCKR	SC70	DCK	5	3000	200.0	183.0	25.0
LM4040C30QDBZR	SOT-23	DBZ	3	3000	180.0	180.0	18.0
LM4040C30QDBZR	SOT-23	DBZ	3	3000	200.0	183.0	25.0
LM4040C30QDBZT	SOT-23	DBZ	3	250	180.0	180.0	18.0
LM4040C41IDBZR	SOT-23	DBZ	3	3000	180.0	180.0	18.0
LM4040C41IDBZR	SOT-23	DBZ	3	3000	200.0	183.0	25.0
LM4040C41IDBZT	SOT-23	DBZ	3	250	180.0	180.0	18.0

Device	Package Type	Package Drawing	Pins	SPQ	Length (mm)	Width (mm)	Height (mm)
LM4040C41IDBZT	SOT-23	DBZ	3	250	203.0	203.0	35.0
LM4040C41IDCKR	SC70	DCK	5	3000	200.0	183.0	25.0
LM4040C50IDBZR	SOT-23	DBZ	3	3000	180.0	180.0	18.0
LM4040C50IDBZR	SOT-23	DBZ	3	3000	200.0	183.0	25.0
LM4040C50IDBZT	SOT-23	DBZ	3	250	180.0	180.0	18.0
LM4040C50IDCKR	SC70	DCK	5	3000	200.0	183.0	25.0
LM4040C50QDBZR	SOT-23	DBZ	3	3000	200.0	183.0	25.0
LM4040C50QDBZR	SOT-23	DBZ	3	3000	180.0	180.0	18.0
LM4040C50QDBZT	SOT-23	DBZ	3	250	203.0	203.0	35.0
LM4040C50QDBZT	SOT-23	DBZ	3	250	180.0	180.0	18.0
LM4040C82IDBZR	SOT-23	DBZ	3	3000	180.0	180.0	18.0
LM4040C82IDBZR	SOT-23	DBZ	3	3000	203.0	203.0	35.0
LM4040C82IDCKR	SC70	DCK	5	3000	203.0	203.0	35.0
LM4040D10IDBZR	SOT-23	DBZ	3	3000	200.0	183.0	25.0
LM4040D10IDBZR	SOT-23	DBZ	3	3000	180.0	180.0	18.0
LM4040D10IDBZT	SOT-23	DBZ	3	250	180.0	180.0	18.0
LM4040D10IDCKR	SC70	DCK	5	3000	200.0	183.0	25.0
LM4040D20IDBZR	SOT-23	DBZ	3	3000	200.0	183.0	25.0
LM4040D20IDBZR	SOT-23	DBZ	3	3000	180.0	180.0	18.0
LM4040D20IDBZT	SOT-23	DBZ	3	250	180.0	180.0	18.0
LM4040D20IDBZT	SOT-23	DBZ	3	250	203.0	203.0	35.0
LM4040D20IDCKR	SC70	DCK	5	3000	200.0	183.0	25.0
LM4040D20QDBZR	SOT-23	DBZ	3	3000	180.0	180.0	18.0
LM4040D20QDBZR	SOT-23	DBZ	3	3000	200.0	183.0	25.0
LM4040D20QDBZT	SOT-23	DBZ	3	250	180.0	180.0	18.0
LM4040D20QDBZT	SOT-23	DBZ	3	250	200.0	183.0	25.0
LM4040D25IDBZR	SOT-23	DBZ	3	3000	200.0	183.0	25.0
LM4040D25IDBZR	SOT-23	DBZ	3	3000	180.0	180.0	18.0
LM4040D25IDBZT	SOT-23	DBZ	3	250	203.0	203.0	35.0
LM4040D25IDBZT	SOT-23	DBZ	3	250	180.0	180.0	18.0
LM4040D25IDCKR	SC70	DCK	5	3000	200.0	183.0	25.0
LM4040D25IDCKT	SC70	DCK	5	250	200.0	183.0	25.0
LM4040D25QDBZR	SOT-23	DBZ	3	3000	180.0	180.0	18.0
LM4040D25QDBZR	SOT-23	DBZ	3	3000	203.0	203.0	35.0
LM4040D25QDBZT	SOT-23	DBZ	3	250	180.0	180.0	18.0
LM4040D25QDBZT	SOT-23	DBZ	3	250	200.0	183.0	25.0
LM4040D30IDBZR	SOT-23	DBZ	3	3000	200.0	183.0	25.0
LM4040D30IDBZR	SOT-23	DBZ	3	3000	180.0	180.0	18.0
LM4040D30IDBZT	SOT-23	DBZ	3	250	203.0	203.0	35.0
LM4040D30IDBZT	SOT-23	DBZ	3	250	180.0	180.0	18.0
LM4040D30IDCKR	SC70	DCK	5	3000	200.0	183.0	25.0
LM4040D30QDBZR	SOT-23	DBZ	3	3000	180.0	180.0	18.0
LM4040D30QDBZR	SOT-23	DBZ	3	3000	200.0	183.0	25.0
LM4040D41IDBZR	SOT-23	DBZ	3	3000	180.0	180.0	18.0

Device	Package Type	Package Drawing	Pins	SPQ	Length (mm)	Width (mm)	Height (mm)
LM4040D41IDBZR	SOT-23	DBZ	3	3000	200.0	183.0	25.0
LM4040D41IDBZT	SOT-23	DBZ	3	250	180.0	180.0	18.0
LM4040D41IDBZT	SOT-23	DBZ	3	250	203.0	203.0	35.0
LM4040D41IDCKR	SC70	DCK	5	3000	200.0	183.0	25.0
LM4040D50IDBZR	SOT-23	DBZ	3	3000	200.0	183.0	25.0
LM4040D50IDBZR	SOT-23	DBZ	3	3000	180.0	180.0	18.0
LM4040D50IDBZT	SOT-23	DBZ	3	250	180.0	180.0	18.0
LM4040D50IDCKR	SC70	DCK	5	3000	200.0	183.0	25.0
LM4040D50QDBZR	SOT-23	DBZ	3	3000	203.0	203.0	35.0
LM4040D50QDBZR	SOT-23	DBZ	3	3000	180.0	180.0	18.0
LM4040D50QDBZT	SOT-23	DBZ	3	250	180.0	180.0	18.0
LM4040D82IDBZR	SOT-23	DBZ	3	3000	203.0	203.0	35.0
LM4040D82IDBZR	SOT-23	DBZ	3	3000	180.0	180.0	18.0
LM4040D82IDBZT	SOT-23	DBZ	3	250	203.0	203.0	35.0
LM4040D82IDBZT	SOT-23	DBZ	3	250	180.0	180.0	18.0
LM4040D82IDCKR	SC70	DCK	5	3000	203.0	203.0	35.0

DCK (R–PDSO–G5) PLASTIC SMALL–OUTLINE PACKAGE

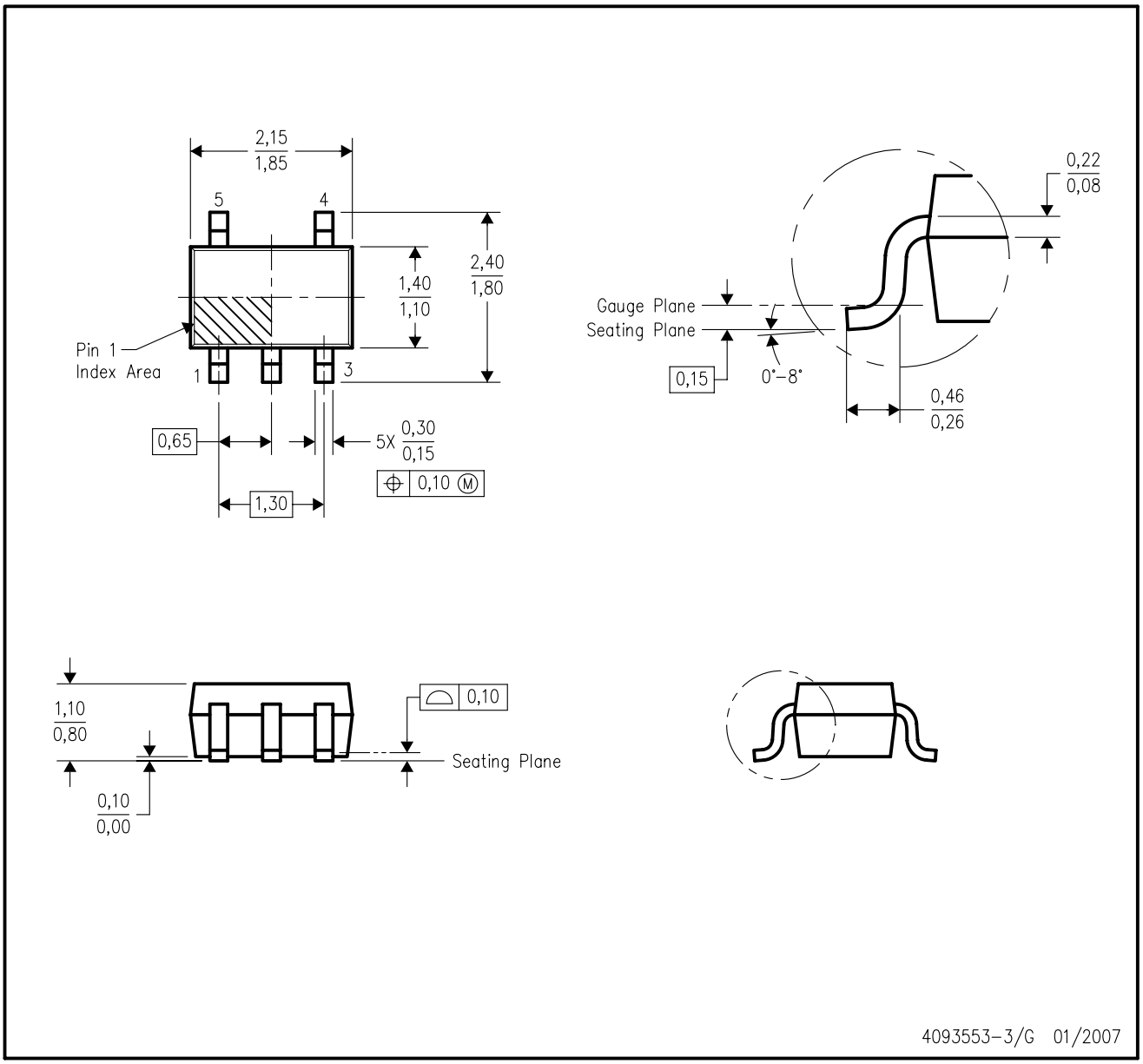

NOTES:
A. All linear dimensions are in millimeters.
B. This drawing is subject to change without notice.
C. Body dimensions do not include mold flash or protrusion. Mold flash and protrusion shall not exceed 0.15 per side.
D. Falls within JEDEC MO–203 variation AA.

DCK (R-PDSO-G5) PLASTIC SMALL OUTLINE

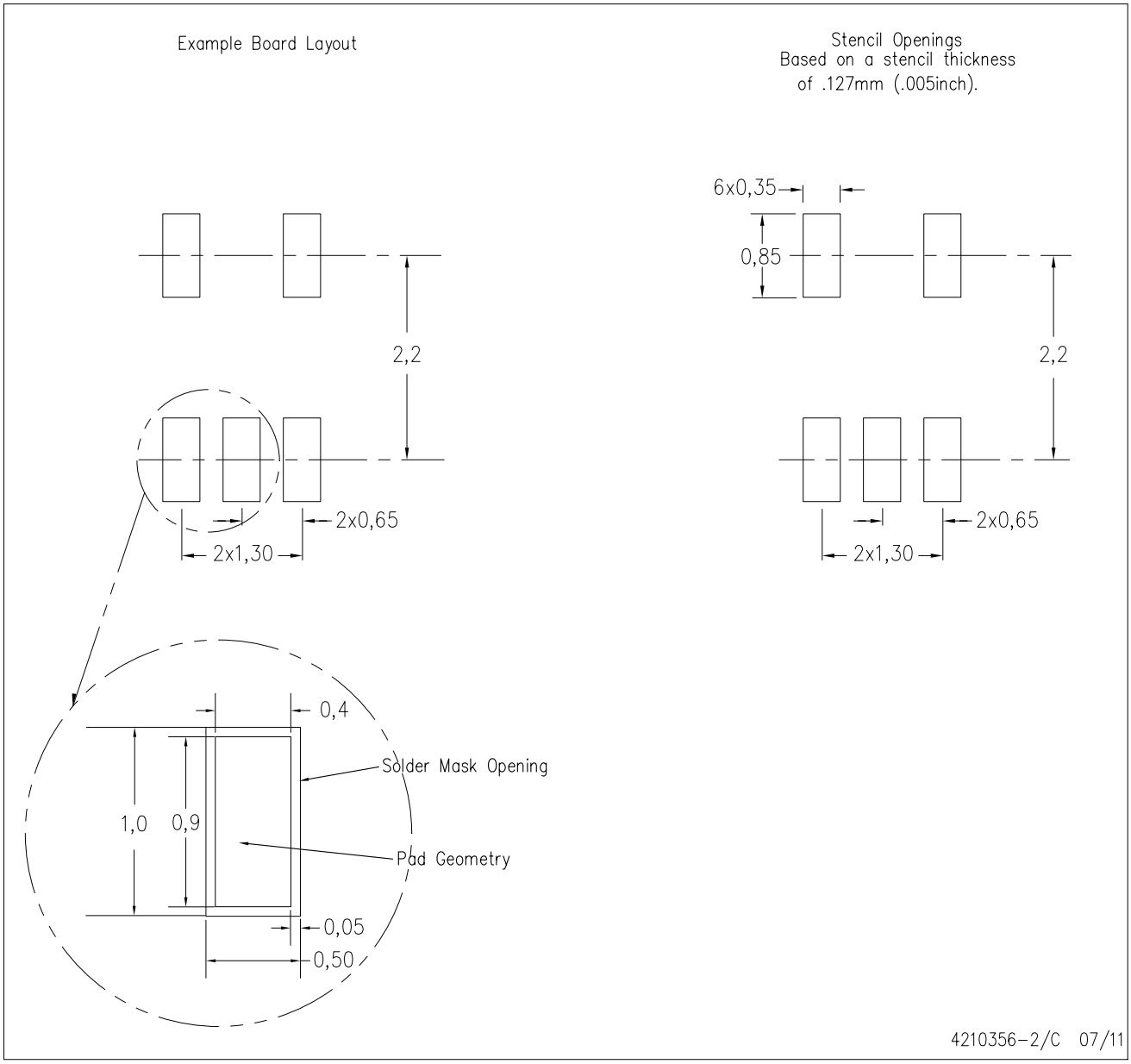

NOTES:
A. All linear dimensions are in millimeters.
B. This drawing is subject to change without notice.
C. Customers should place a note on the circuit board fabrication drawing not to alter the center solder mask defined pad.
D. Publication IPC-7351 is recommended for alternate designs.
E. Laser cutting apertures with trapezoidal walls and also rounding corners will offer better paste release. Customers should contact their board assembly site for stencil design recommendations. Example stencil design based on a 50% volumetric metal load solder paste. Refer to IPC-7525 for other stencil recommendations.

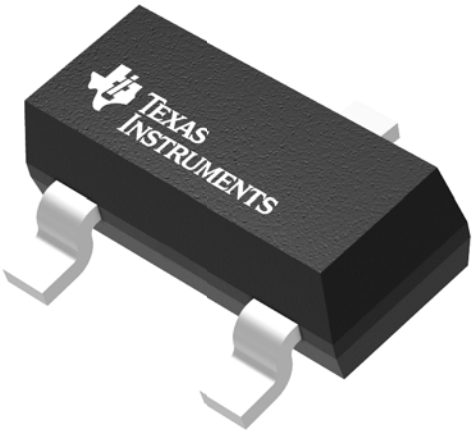

Images above are just a representation of the package family, actual package may vary.
Refer to the product data sheet for package details.

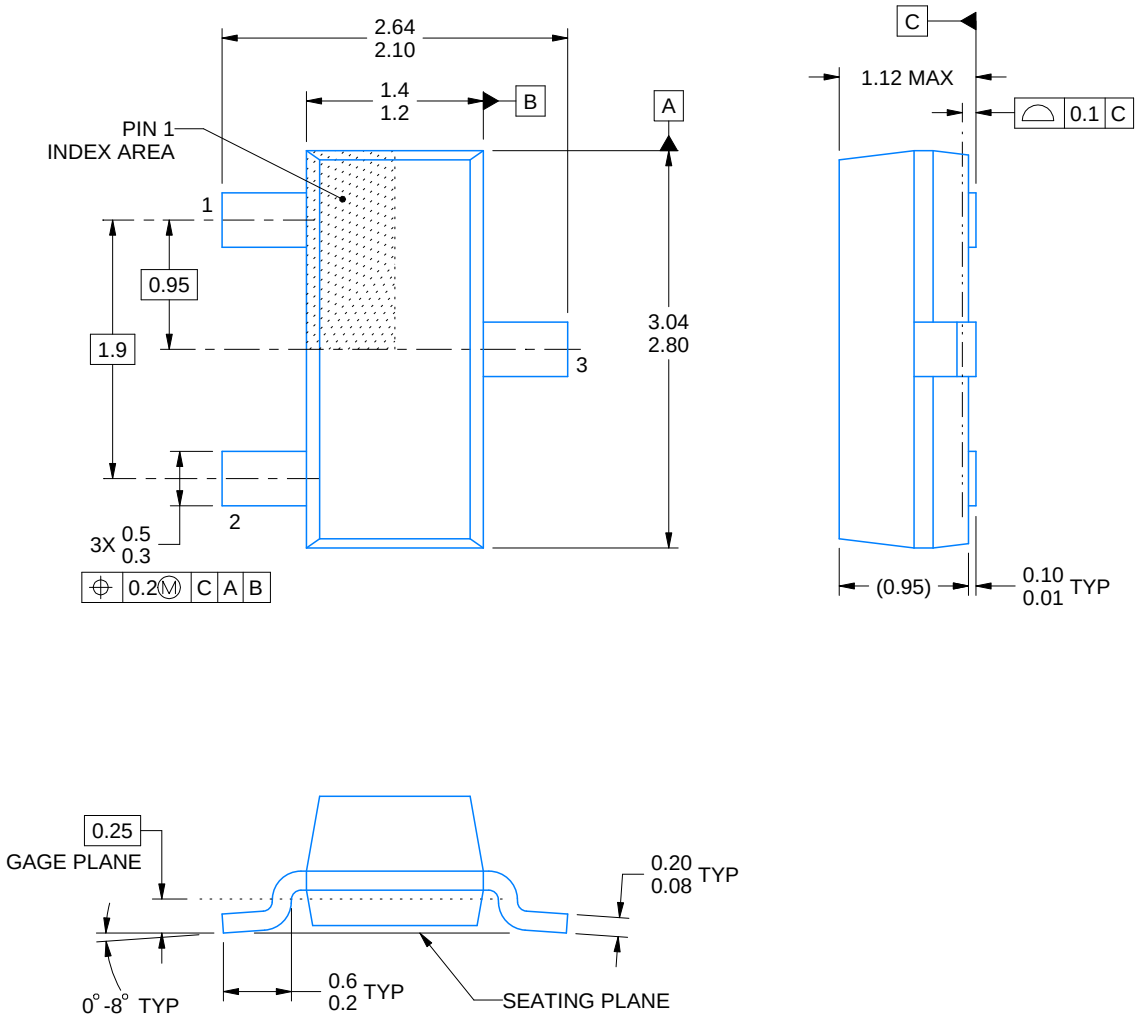

4214838/C 04/2017

NOTES:

1. All linear dimensions are in millimeters. Any dimensions in parenthesis are for reference only. Dimensioning and tolerancing per ASME Y14.5M.
2. This drawing is subject to change without notice.
3. Reference JEDEC registration TO-236, except minimum foot length.

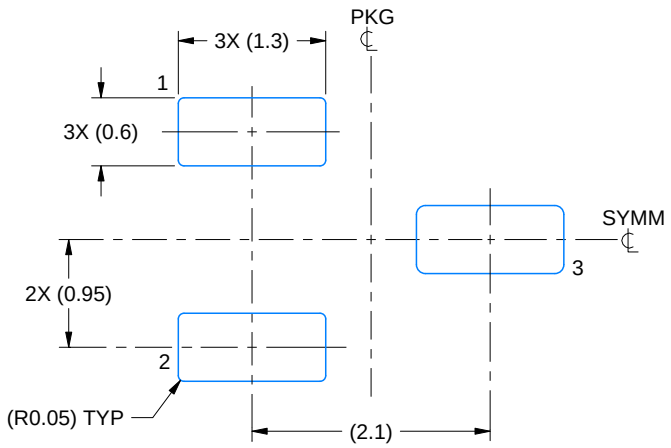

LAND PATTERN EXAMPLE
SCALE:15X

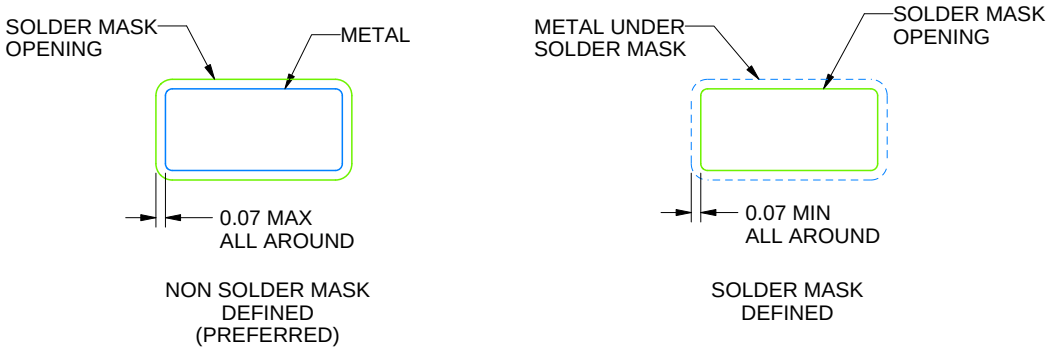

SOLDER MASK DETAILS

4214838/C 04/2017

NOTES: (continued)

4. Publication IPC-7351 may have alternate designs.
5. Solder mask tolerances between and around signal pads can vary based on board fabrication site.

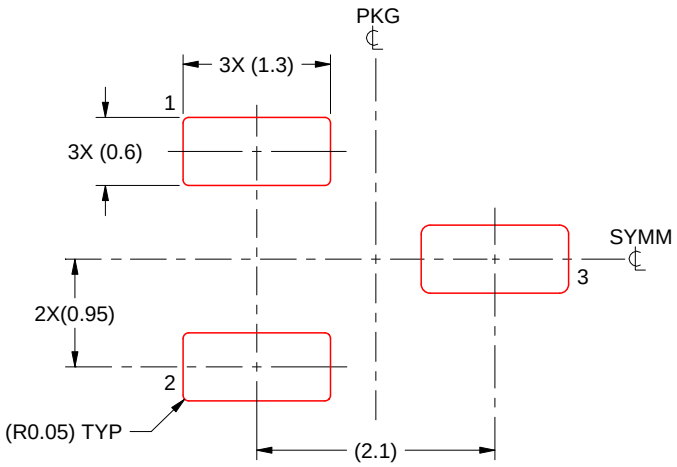

SOLDER PASTE EXAMPLE
BASED ON 0.125 THICK STENCIL
SCALE:15X

4214838/C 04/2017

NOTES: (continued)

6. Laser cutting apertures with trapezoidal walls and rounded corners may offer better paste release. IPC-7525 may have alternate design recommendations.
7. Board assembly site may have different recommendations for stencil design.

Images above are just a representation of the package family, actual package may vary.
Refer to the product data sheet for package details.

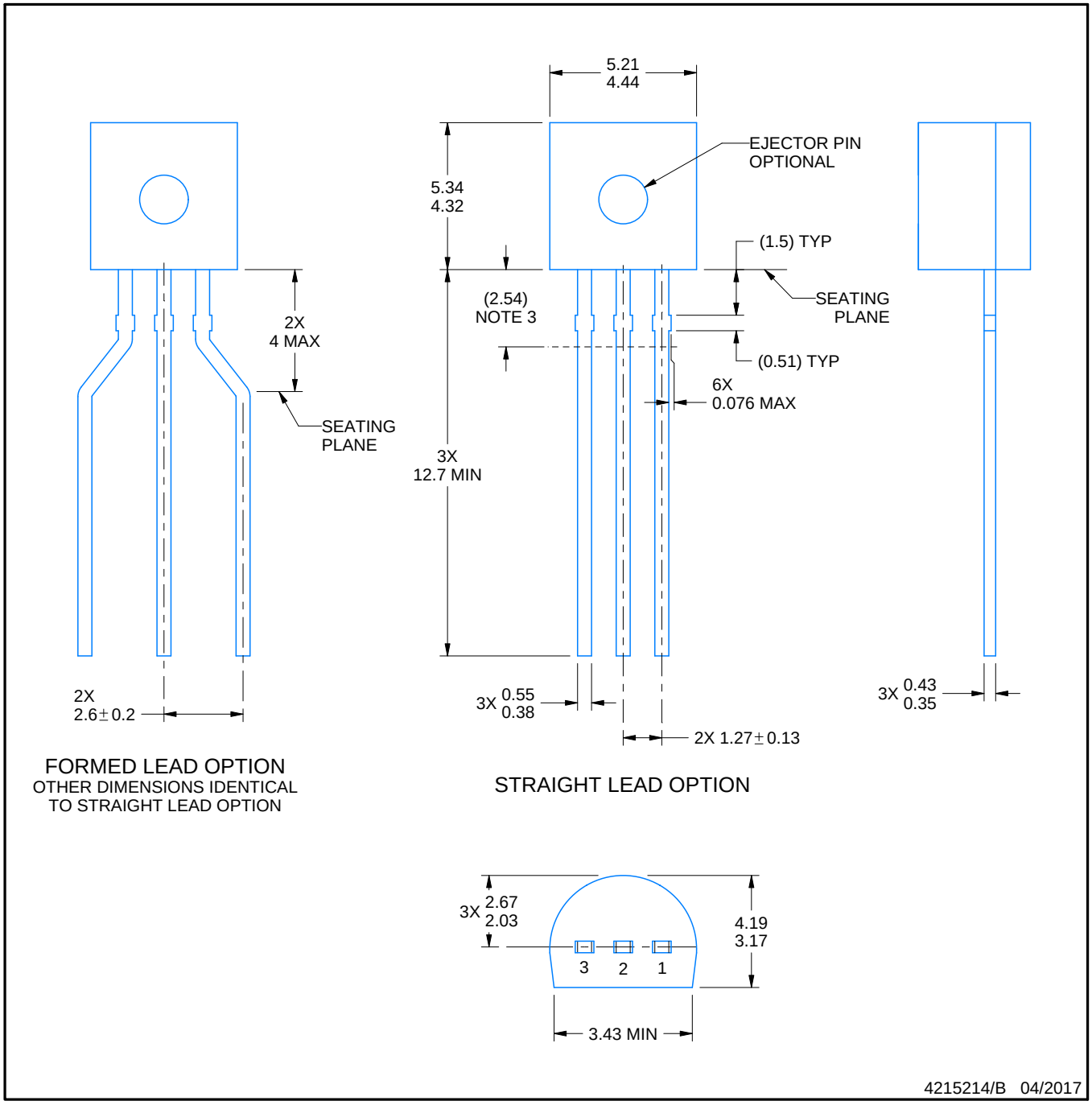

NOTES:

1. All linear dimensions are in millimeters. Any dimensions in parenthesis are for reference only. Dimensioning and tolerancing per ASME Y14.5M.
2. This drawing is subject to change without notice.
3. Lead dimensions are not controlled within this area.
4. Reference JEDEC TO-226, variation AA.
5. Shipping method:
   a. Straight lead option available in bulk pack only.
   b. Formed lead option available in tape and reel or ammo pack.
   c. Specific products can be offered in limited combinations of shipping medium and lead options.
   d. Consult product folder for more information on available options.

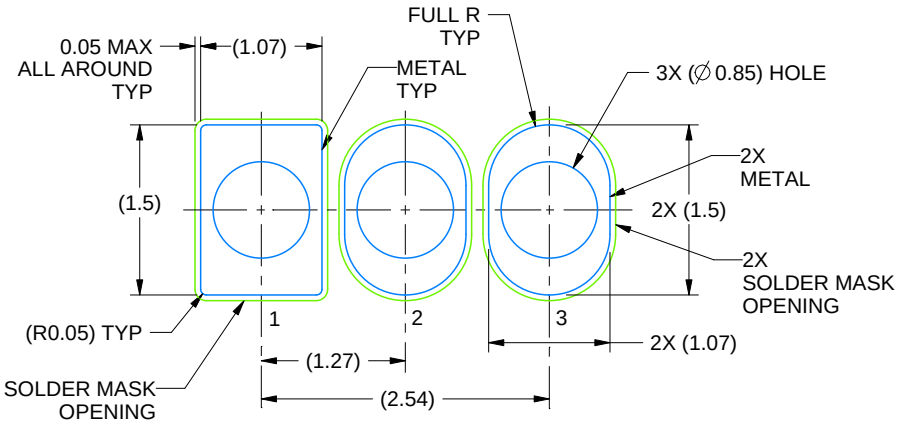

LAND PATTERN EXAMPLE
STRAIGHT LEAD OPTION
NON-SOLDER MASK DEFINED
SCALE:15X

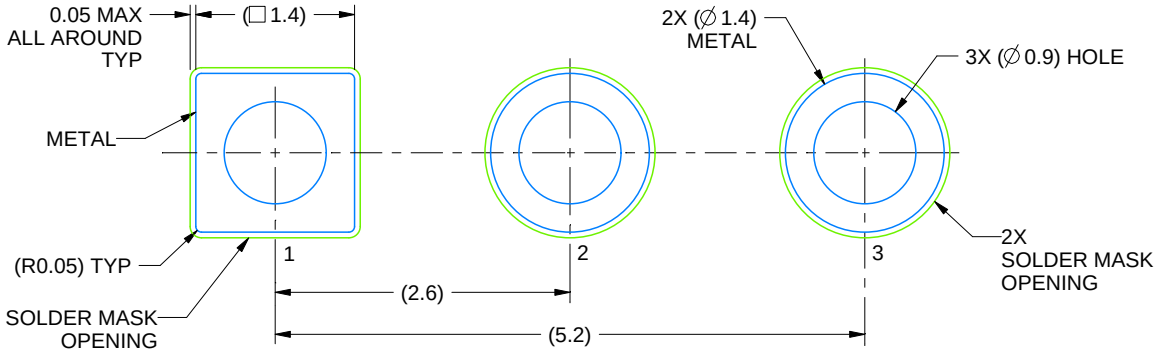

LAND PATTERN EXAMPLE
FORMED LEAD OPTION
NON-SOLDER MASK DEFINED
SCALE:15X

4215214/B 04/2017

TO-92

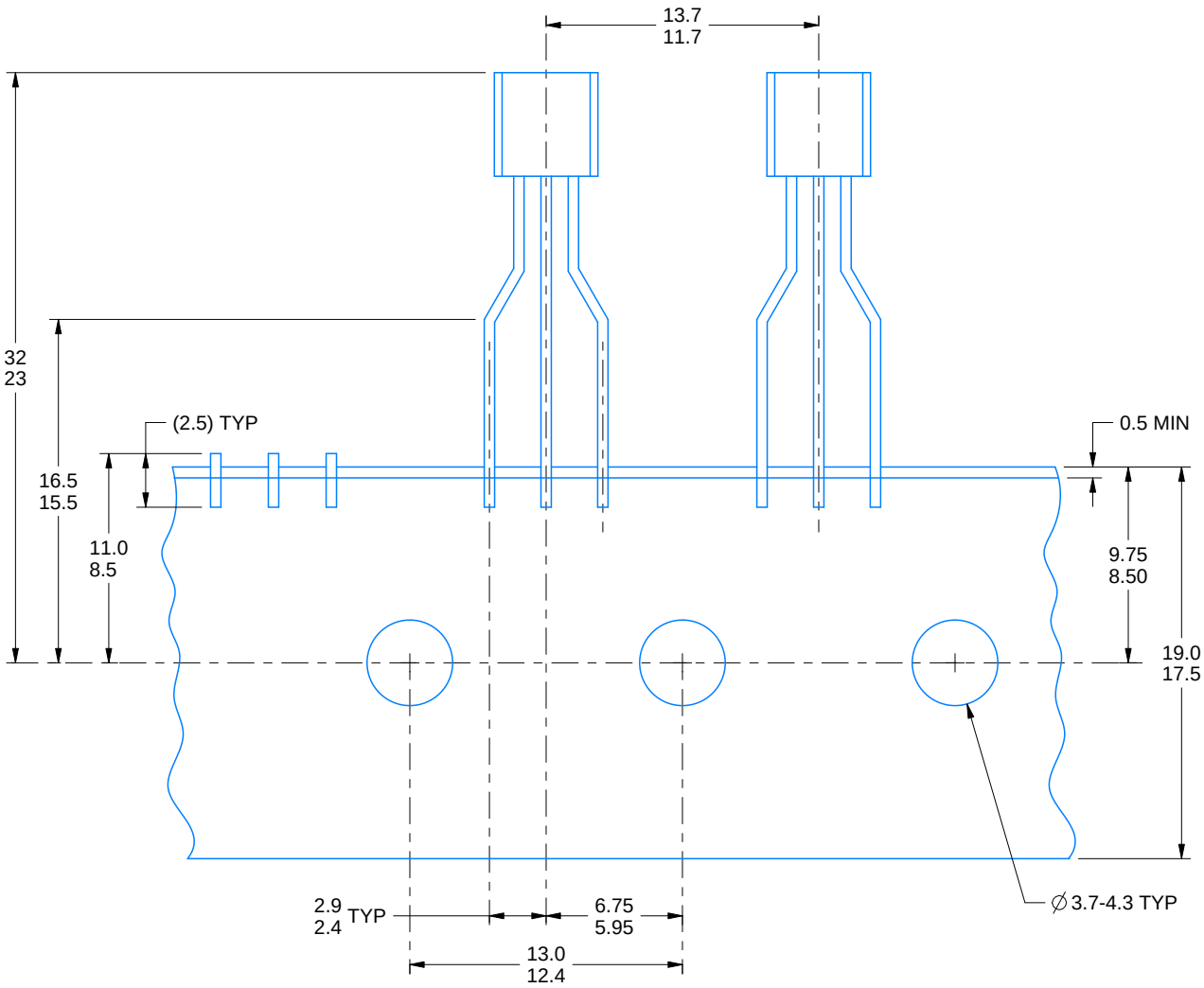

FOR FORMED LEAD OPTION PACKAGE

4215214/B 04/2017

IMPORTANT NOTICE AND DISCLAIMER

TI PROVIDES TECHNICAL AND RELIABILITY DATA (INCLUDING DATA SHEETS), DESIGN RESOURCES (INCLUDING REFERENCE DESIGNS), APPLICATION OR OTHER DESIGN ADVICE, WEB TOOLS, SAFETY INFORMATION, AND OTHER RESOURCES “AS IS” AND WITH ALL FAULTS, AND DISCLAIMS ALL WARRANTIES, EXPRESS AND IMPLIED, INCLUDING WITHOUT LIMITATION ANY IMPLIED WARRANTIES OF MERCHANTABILITY, FITNESS FOR A PARTICULAR PURPOSE OR NON-INFRINGEMENT OF THIRD PARTY INTELLECTUAL PROPERTY RIGHTS.

These resources are intended for skilled developers designing with TI products. You are solely responsible for (1) selecting the appropriate TI products for your application, (2) designing, validating and testing your application, and (3) ensuring your application meets applicable standards, and any other safety, security, regulatory or other requirements.

These resources are subject to change without notice. TI grants you permission to use these resources only for development of an application that uses the TI products described in the resource. Other reproduction and display of these resources is prohibited. No license is granted to any other TI intellectual property right or to any third party intellectual property right. TI disclaims responsibility for, and you will fully indemnify TI and its representatives against, any claims, damages, costs, losses, and liabilities arising out of your use of these resources.

TI’s products are provided subject to TI’s Terms of Sale or other applicable terms available either on ti.com or provided in conjunction with such TI products. TI’s provision of these resources does not expand or otherwise alter TI’s applicable warranties or warranty disclaimers for TI products.

TI objects to and rejects any additional or different terms you may have proposed.

Mailing Address: Texas Instruments, Post Office Box 655303, Dallas, Texas 75265
Copyright © 2022, Texas Instruments Incorporated