LM48512 Boomer® Audio Power Amplifier Series PowerWise® Boosted, Ultra Low-EMI, Mono, E²S Class D Audio Power Amplifier

Check for Samples: LM48512

FEATURES

- **E²S System Reduces EMI while Preserving Audio Quality and Efficiency**
- **Integrated Boost Converter**
- **Supply Voltage Level Detection on Boost Converter**
- **Low Power Shutdown Mode**
- **"Click and Pop" suppression**

APPLICATIONS

- **Mobile phones**
- **Smart phones**
- **PDAs**

DESCRIPTION

Part of National's PowerWise family or products, the LM48512 delivers 1.8W into 8Ω, while consuming 14.5mA of quiescent current. The LM48512 also features National's Enhanced Emissions Suppression (E²S) system, a patented, ultra low EMI PWM architecture that significantly reduces RF emissions while preserving audio quality and efficiency. LM48512 improves battery life, reduces external component count, board area consumption, system cost, and simplifies design.

The LM48512 is designed to meet the demands of portable multimedia devices. The LM48512 features high efficiency compared to other boosted amplifiers and low EMI Class D amplifiers. The LM48512 is capable of driving an 8Ω speaker to 5.5V levels (1.8W) from a 3.6V supply while operating at 82% efficiency. Flexible power supply requirements allow operation from 2.3V to 5.5V. The E²S system features a patented edge rate control (ERC) architecture that further reduces emissions by minimizing the high frequency component of the device output, while maintaining high quality audio reproduction (THD+N = 0.03%) and high efficiency. A low power shutdown mode reduces supply current consumption to 0.04µA.

The LM48512 features a battery-saving automatic gain control (AGC). The AGC detects the battery voltage and reduces the gain of the amplifier to limit the output as the battery voltage decreases.

Superior click and pop suppression eliminates audible transients on power-up/down and during shutdown.

Table 1. Key Specifications

	VALUE	UNIT
■ Power Output at V_{DD} = 3.6V R_L = 8Ω, THD+N ≤ 1%	1.8	W (typ)
■ Efficiency at 3.6V, 800mW into 8Ω	82% (typ)	
■ Quiescent Power Supply Current at 3.6V	14.5mA	
■ Shutdown current	0.04µA (typ)	

Please be aware that an important notice concerning availability, standard warranty, and use in critical applications of Texas Instruments semiconductor products and disclaimers thereto appears at the end of this data sheet.

All trademarks are the property of their respective owners.

PRODUCTION DATA information is current as of publication date. Products conform to specifications per the terms of the Texas Instruments standard warranty. Production processing does not necessarily include testing of all parameters.

Copyright © 2010–2012, Texas Instruments Incorporated

Typical Application

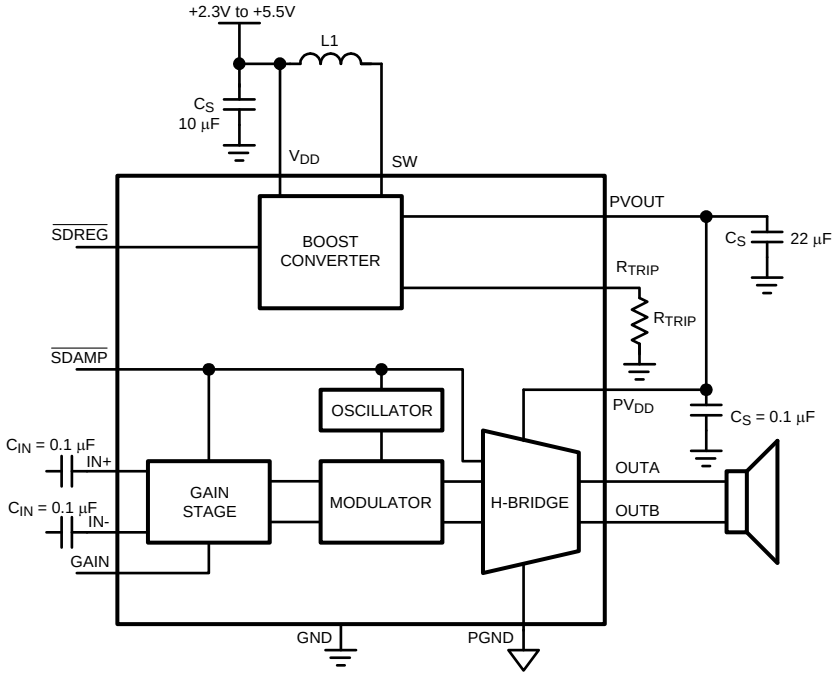

Figure 1. Typical Audio Amplifier Application Circuit

Connection Diagram

TL Package
2.098mm x 2.098mm x 0.6mm

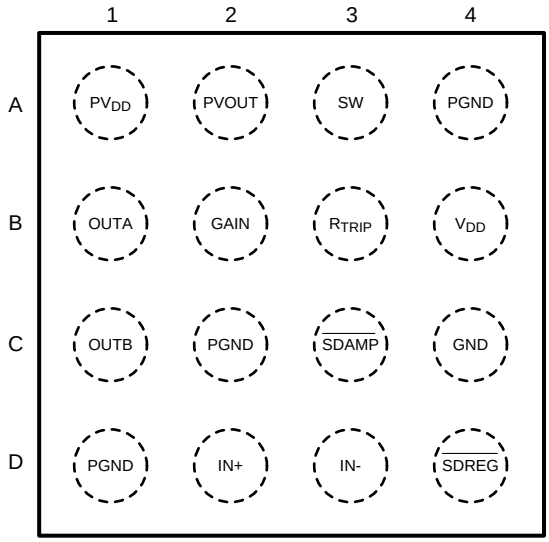

Figure 2. Top View
Order Number LM48512TL
See NS Package Number TLA16QSA

Copyright © 2010–2012, Texas Instruments Incorporated

16 – Bump micro SMD Markings

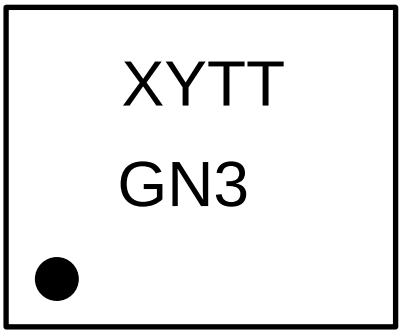

Figure 3. Top View
XY = Date Code
TT = Die Traceability
G = Boomer Family
N3 = LM48512TL

Pin Functions

Pin Descriptions

PIN	NAME	DESCRIPTION
A1	PV_{DD}	Amplifier Power Supply Input. Connect to PVOUT.
A2	PVOUT	Boost Converter Output
A3	SW	Boost Converter Switching Node
A4	PGND	Boost Converter Power Ground
B1	OUTA	Non-Inverting Amplifier Output
B2	GAIN	Gain Select Input
B3	R_{TRIP}	Boost Supply Threshold Voltage Set Pin
B4	V_{DD}	Power Supply
C1	OUTB	Inverting Amplifier Output
C2, D1	PGND	Class D Power Ground
C3	$\overline{\text{SDAMP}}$	Active Low Amplifier Shutdown Input. Connect to V_{DD} for normal operation.
C4	GND	Ground
D2	IN+	Non-Inverting Amplifier Input
D3	IN-	Inverting Amplifier Input
D4	$\overline{\text{SDREG}}$	Active Low Boost Converter Shutdown Input. Connect to V_{DD} for normal operation.

These devices have limited built-in ESD protection. The leads should be shorted together or the device placed in conductive foam during storage or handling to prevent electrostatic damage to the MOS gates.

Copyright © 2010–2012, Texas Instruments Incorporated

Absolute Maximum Ratings (1) (2)

Supply Voltage (V_{DD}) (1)	6.0V
Storage Temperature	−65°C to +150°C
Power Dissipation (3)	Internally Limited
ESD Rating (4)	2000V
ESD Rating (5)	200V
Junction Temperature	150°C
Thermal Resistance	
θ_{JA} (TLA16QSA)	50°C/W
Soldering Information	
See AN-1112 “Micro SMD Wafer Level Chip Scale Package”	

(1) *“Absolute Maximum Ratings”* indicate limits beyond which damage to the device may occur, including inoperability and degradation of device reliability and/or performance. Functional operation of the device and/or non-degradation at the *Absolute Maximum Ratings* or other conditions beyond those indicated in the *Recommended Operating Conditions* is not implied. The *Recommended Operating Conditions* indicate conditions at which the device is functional and the device should not be operated beyond such conditions. All voltages are measured with respect to the ground pin, unless otherwise specified.

(2) The *Electrical Characteristics* tables list guaranteed specifications under the listed *Recommended Operating Conditions* except as otherwise modified or specified by the *Electrical Characteristics Conditions* and/or Notes. Typical specifications are estimations only and are not guaranteed.

(3) The maximum power dissipation must be derated at elevated temperatures and is dictated by T_{JMAX}, θ_{JA}, and the ambient temperature, T_A. The maximum allowable power dissipation is $P_{DMAX} = (T_{JMAX} - T_A) / \theta_{JA}$ or the number given in *Absolute Maximum Ratings*, whichever is lower.

(4) Human body model, applicable std. JESD22-A114C.

(5) Machine model, applicable std. JESD22-A115-A.

Operating Ratings

Temperature Range	
$T_{MIN} \le T_A \le T_{MAX}$	$-40°C \le T_A \le +85°C$
Supply Voltage	$2.3V \le V_{DD} \le 5.5V$

Copyright © 2010–2012, Texas Instruments Incorporated

Electrical Characteristics V_{DD} = 3.6V, PV_{DD} = 5.75V

(1)(2)

The following specifications apply for A_V = 2V/V, L = 2.2µH, R_L = 15µH + 8Ω + 15µH (3), f = 1kHz, unless otherwise specified. Limits apply for T_A = 25°C.

Symbol	Parameter	Conditions	LM48512		Units (Limits)
			Typical (4)	Limit (5)	
V_{OS}	Differential Output Offset Voltage	V_{IN} = 0, V_{DD} = 2.3V to 5.5V	3	10	mV
I_{DD}	Quiescent Power Supply Current	V_{IN} = 0, R_L = ∞ V_{DD} = 3.6V Boost Converter Only	 14.5 8.5	19	 mA (max) mA
PV_{OUT}	Boost Converter Output Voltage	$\overline{SDREG}$ = V_{DD} $\overline{SDAMP}$ = GND	5.75		V
I_{SD}	Shutdown Current	$\overline{SDAMP}$ = $\overline{SDREG}$ = GND	0.04	1	µA (max)
V_{IH}	Logic Input High Voltage			1.35	V (min)
V_{IL}	Logic Input Low Voltage			0.35	V (max)
T_{WU}	Wake Up Time		9		ms
$f_{SW(AMP)}$	Class D Switching Frequency		320		kHz
A_V	Gain	GAIN = GND (<0.7V)	2	±5%	V/V (max)
		GAIN = float (0.7V–1.0V)	6	±5%	V/V (max)
		GAIN = V_{DD} (>1.0V)	10	±5%	V/V (max)
R_{IN}	Input Resistance	A_V = 2V/V (6dB) A_V = 6V/V (15.5dB) A_V = 10V/V (20dB)	30 15 10	 8	kΩ kΩ kΩ (min)
		$\overline{SDAMP}$ = $\overline{SDREG}$ = GND	70		kΩ
V_{CM}	Input Common Mode		1.4		V
V_{IN}	Differential AC Input	Device Enabled or Disabled		5.6	V_{P-P} (max)
P_O	Output Power	R_L = 15µH+8Ω+15µH, THD+N = 10% f = 1kHz, 22kHz BW	2.2		W
		R_L = 15µH+8Ω+15µH, THD+N = 1% f = 1kHz, 22kHz BW	1.8	1.7	W (min)
		R_L = 15µH+4Ω+15µH, THD+N = 1% f = 1kHz, 22kHz BW	2.7		W
THD+N	Total Harmonic Distortion + Noise	R_L = 15µH+8Ω+15µH, f = 1kHz P_O = 100mW P_O = 1W	 0.03 0.03		 % %
		R_L = 15µH+4Ω+15µH, f = 1kHz P_O = 1W	 0.03		 %
PSRR	Power Supply Rejection Ratio	V_{RIPPLE} = 200mV_{P-P} Sine Inputs AC GND, Input referred C_{IN} = 100nF, f_{RIPPLE} = 217Hz	90		dB
		V_{RIPPLE} = 200mV_{P-P} Sine Inputs AC GND, Input referred C_{IN} = 100nF, f_{RIPPLE} = 1kHz	85		dB

(1) *"Absolute Maximum Ratings"* indicate limits beyond which damage to the device may occur, including inoperability and degradation of device reliability and/or performance. Functional operation of the device and/or non-degradation at the *Absolute Maximum Ratings* or other conditions beyond those indicated in the *Recommended Operating Conditions* is not implied. The *Recommended Operating Conditions* indicate conditions at which the device is functional and the device should not be operated beyond such conditions. All voltages are measured with respect to the ground pin, unless otherwise specified.

(2) The *Electrical Characteristics* tables list guaranteed specifications under the listed *Recommended Operating Conditions* except as otherwise modified or specified by the *Electrical Characteristics Conditions* and/or Notes. Typical specifications are estimations only and are not guaranteed.

(3) R_L is a resistive load in series with two inductors to simulate an actual speaker load. For R_L = 8Ω, the load is 15µH+8Ω+15µH. For R_L = 4Ω, the load is 15µH+4Ω+15µH.

(4) Typical values represent most likely parametric norms at T_A = +25°C, and at the *Recommended Operation Conditions* at the time of product characterization and are not guaranteed.

(5) Datasheet min/max specification limits are guaranteed by test or statistical analysis.

Copyright © 2010–2012, Texas Instruments Incorporated

Electrical Characteristics V_{DD} = 3.6V, PV_{DD} = 5.75V (continued)

(1) (2)

The following specifications apply for A_V = 2V/V, L = 2.2µH, R_L = 15µH + 8Ω + 15µH (3), f = 1kHz, unless otherwise specified. Limits apply for T_A = 25°C.

Symbol	Parameter	Conditions	LM48512		Units (Limits)
			Typical (4)	Limit (5)	
CMRR	Common Mode Rejection Ratio	V_{RIPPLE} = 1V_{P-P} f_{RIPPLE} = 217Hz	65		dB
η	Efficiency	R_L = 15µH+8Ω+15µH, f = 1kHz P_O = 400mW P_O = 800mW P_O = 1.8W	 78 82 81		 % % %
SNR	Signal-To-Noise-Ratio	P_O = 1.8W, A-weighted Filter	97		dB
ε_{OS}	Output Noise	Input referred, A-weighted Filter	25		µV
		Input referred, Un-weighted	50		µV
$V_{DD(TRIP)}$	Supply Voltage AGC Trip Point	R_{TRIP} = 64.9kΩ R_{TRIP} = 27.5kΩ R_{TRIP} = 20kΩ	3.00 3.55 3.70	±5% ±5% ±5%	V (max) V (max) V (max)
$I_{LIMIT(SU)}$	Boost Converter Start-up Current Limit		600		mA
I_{IND}	Boost Converter Maximum Inductor Current		2.25		A
	Gain Compression Range		6		dB
t_A	Attack Time		20		µs/dB
t_R	Release Time		1600		ms/dB
$f_{SW(REG)}$	Boost Converter Switching Frequency		2		MHz

Copyright © 2010–2012, Texas Instruments Incorporated

Typical Performance Characteristics

THD+N vs Frequency
V_{DD} = 3.6V, P_O = 1W, R_L = 8Ω

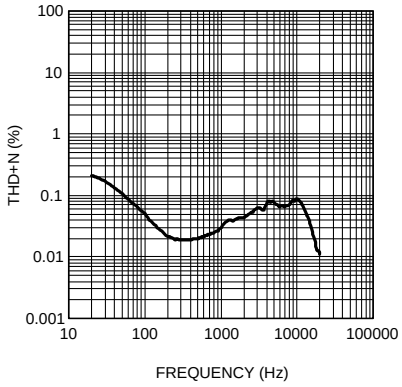

THD+N vs Output Power
V_{DD} = 2.7V, R_L = 8Ω, f = 1kHz

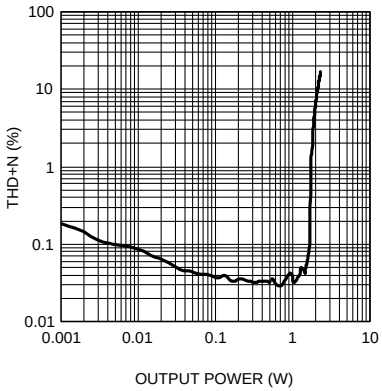

THD+N vs Output Power
V_{DD} = 3.6V, R_L = 4Ω, f = 1kHz

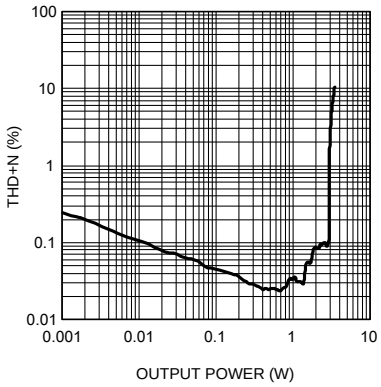

THD+N vs Output Power
V_{DD} = 3.6V, R_L = 8Ω, f = 1kHz

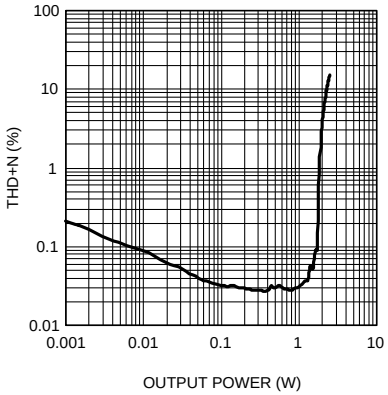

Copyright © 2010–2012, Texas Instruments Incorporated

THD+N vs Output Power
V_{DD} = 5.0V, R_L = 8Ω, f = 1kHz

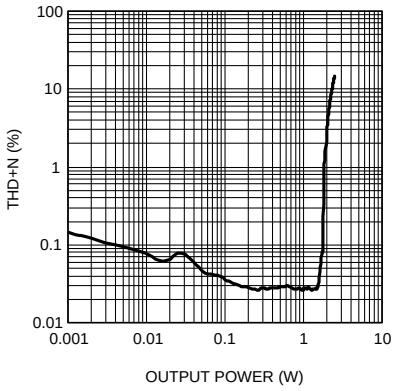

Efficiency vs Output Power
R_L = 8Ω, f = 1kHz

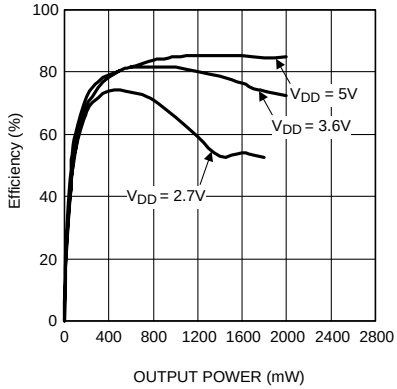

CMRR vs Frequency
V_{DD} = 3.6V, f = 217Hz
V_{RIPPLE} = 1V_{P-P}, R_L = 8Ω

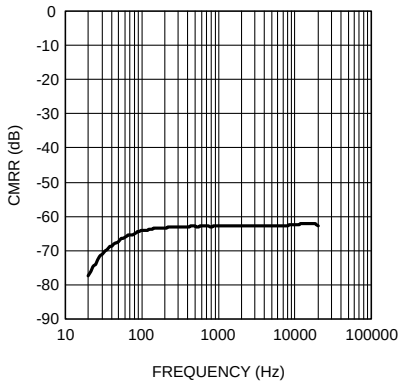

PSRR vs Frequency
V_{DD} = 3.6V, f = 1kHz
V_{RIPPLE} = 200mV_{p-p}, R_L = 8Ω

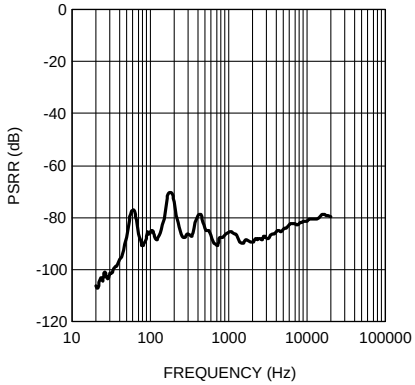

Copyright © 2010–2012, Texas Instruments Incorporated

Power Dissipation vs Output Power R_L = 8Ω, f = 1kHz

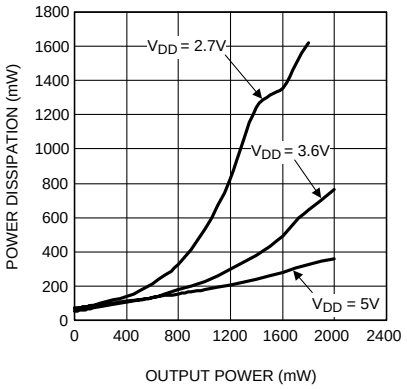

Output Power vs Supply Voltage R_L = 8Ω, f = 1kHz

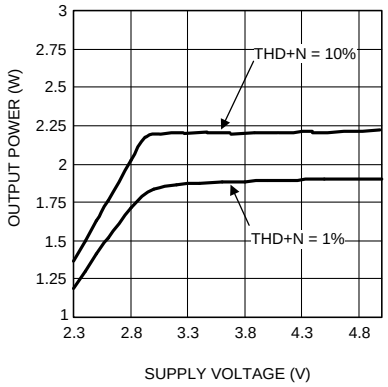

Supply Current vs Supply Voltage No Load

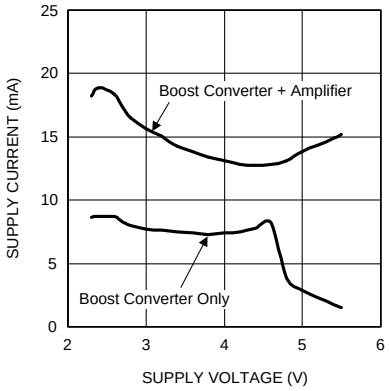

Boost Output Voltage vs Load Current V_{DD} = 2.7V

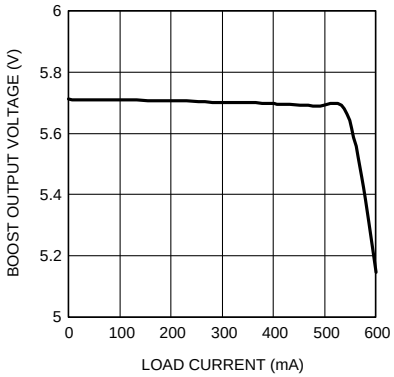

Boost Output Voltage vs Load Current V_{DD} = 3.6V

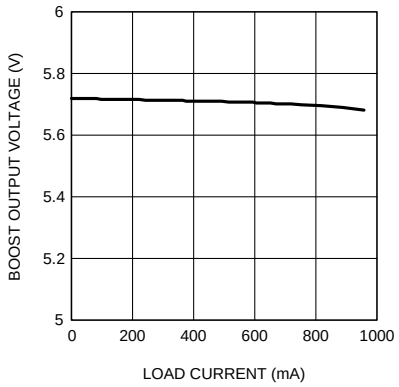

Boost Output Voltage vs Load Current V_{DD} = 5.0V

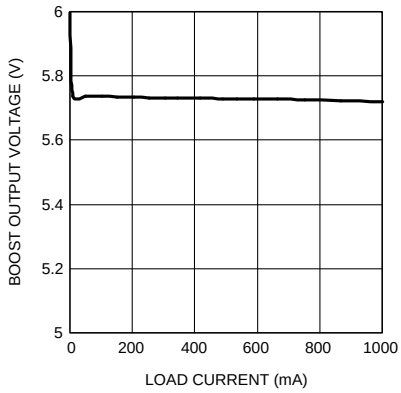

Application Information

GENERAL AMPLIFIER FUNCTION

The LM48512 mono Class D audio power amplifier features a filterless modulation scheme that reduces external component count, conserving board space and reducing system cost. The outputs of the device transition from V_{DD} to GND with a 300kHz switching frequency. With no signal applied, the outputs (V_{OUTA} and V_{OUTB}) switch with a 50% duty cycle, in phase, causing the two outputs to cancel. This cancellation results in no net voltage across the speaker, thus there is no current to the load in the idle state.

With the input signal applied, the duty cycle (pulse width) of the LM48512 outputs changes. For increasing output voltage, the duty cycle of V_{OUTA} increases, while the duty cycle of V_{OUTB} decreases. For decreasing output voltages, the converse occurs. The difference between the two pulse widths yields the differential output voltage.

ENHANCED EMISSIONS SUPPRESSION SYSTEM (E^2S)

The LM48512 features National's patent-pending E^2S system that reduces EMI, while maintaining high quality audio reproduction and efficiency. The E^2S system features advanced edge rate control (ERC), greatly reducing the high frequency components of the output square waves by controlling the output rise and fall times, slowing the transitions to reduce RF emissions, while maximizing THD+N and efficiency performance. The overall result of the E^2S system is a filterless Class D amplifier that passes FCC Class B radiated emissions standards with 20in of twisted pair cable, with excellent 0.03% THD+N and high 82% efficiency.

DIFFERENTIAL AMPLIFIER EXPLANATION

As logic supplies continue to shrink, system designers are increasingly turning to differential analog signal handling to preserve signal to noise ratios with restricted supply level. The LM48512 features a fully differential speaker amplifier. A differential amplifier amplifies the difference between the two input signals. Traditional audio power amplifiers have typically offered only single-ended inputs resulting in a 6dB reduction of SNR relative to differential inputs. The LM48512 also offers the possibility of DC input coupling which eliminates the input coupling capacitors. A major benefit of the fully differential amplifier is the improved common mode rejection ratio (CMRR) over single ended input amplifiers. The increased CMRR of the differential amplifier reduces sensitivity to ground offset related noise injection, especially important in noisy systems.

When evaluating the LM48512, use BAL-GND inputs and provide clean grounding to ensure proper operation.

SYNCHRONOUS RECTIFIER

The LM48512 uses an internal synchronous series switch in place of an external Schottcky diode, which reduces the number of external components required for its application. Efficiency is also increased since the power dissipation of the switch is less than the power dissipation of a diode.

Copyright © 2010–2012, Texas Instruments Incorporated

BOOST INPUT CAPACITOR SELECTION

An input capacitor is required to serve as an energy reservoir for the current which must flow into the coil each time the switch turns ON. The input capacitor will also help keep the noise low from the power supply. This capacitor must have extremely low ESR, so ceramic capacitors are recommended. A nominal value of 10µF is recommended for this application.

MAXIMUM CURRENT

The boost converter of the LM48512 has two maximum current limits to prevent damage to the device and also battery shutdown when the current gets too high. First is the control of the start-up current, where the boost converter internally limits it to 600mA ($I_{LIMIT(SU)}$). The second limit is on the inductor current, where it is typically internally limited to 2.25A.

AUTOMATIC GAIN CONTROL AND AUTOMATIC LEVEL CONTROL

The LM48512 features either Automatic Gain Control (AGC) or Automatic Level Control (ALC) by configuring the R_{TRIP} pin B3. The settings are shown in Table 2.

Table 2. Automatic Gain/Level Control Table

R_{TRIP}	Operation
V_{DD}	Disable AGC and ALC
Resistor	AGC
GND	ALC

Automatic Gain Control Operation

The AGC circuitry is designed to limit the output swing to the load for speaker protection and to prolong battery life. When R_{TRIP} is connected to a resistor, AGC activates by detecting the V_{DD} level in combination with the input level. The user can set the V_{DD} level ($V_{DD(TRIP)}$) at which AGC trips by connecting different resistor values (R_{TRIP}) to ground, refer to Table 3.

Table 3. AGC Table

R_{TRIP} (kΩ)	$V_{DD(TRIP)}$ (V)
20.0	3.7
24.8	3.6
27.5	3.55
30.3	3.5
36.3	3.4
42.8	3.3
49.7	3.2
57.1	3.1
64.9	3.0
73.2	2.9
82.0	2.8

Copyright © 2010–2012, Texas Instruments Incorporated

Once V_{DD} drops below the $V_{DD(TRIP)}$ voltage set by R_{TRIP}, AGC operation begins. While AGC is in operation, V_{DD} sets the output swing as shown in Figure 4.

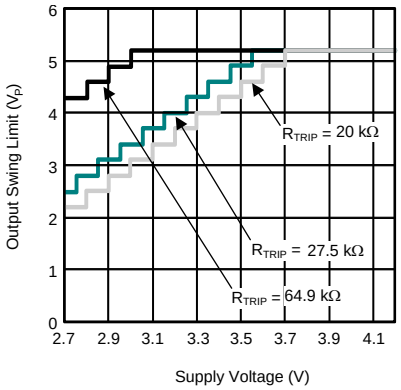

Figure 4. AGC Output Swing vs Supply Voltage Graph

If output swing of the amplifier exceeds the limit determined by V_{DD}, gain of the amplifier will be adjusted accordingly.

See Figure 5 for the following:

Attack: AGC attack occurs at increments of -1dB steps every 20µs until the output is below the output swing limit or when it reaches the maximum gain compression of -6dB.

Release: AGC releases at increments of 0.5dB steps per every 800ms if the output does not reach the output swing limit.

Adjusting: While the part is in compression mode, the first attack following a release is at increments of 0.5dB steps, this is also referred to as Adjusting.

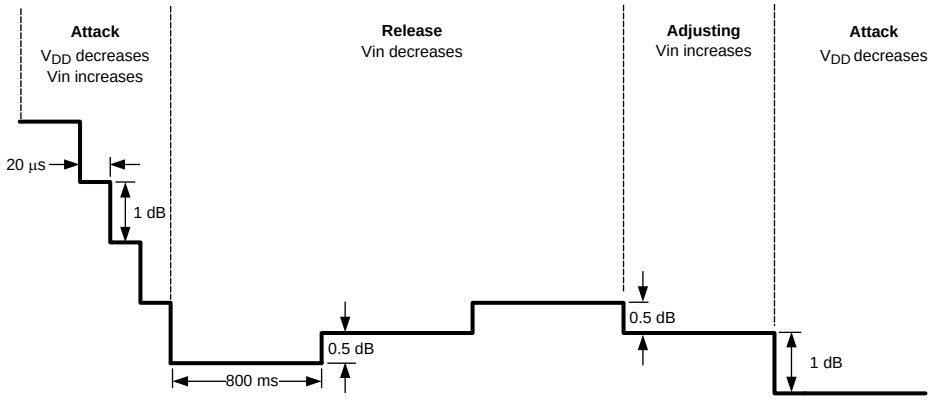

Figure 5. AGC Operation

Automatic Level Control

The ALC circuitry is similar to AGC in that it also limits the output swing of the amplifier, but the difference is that ALC is always activated once the R_{TRIP} pin is connected to GND. The output limit swing of the amplifier will be limited to 90% of PVOUT, with the same Attack, Release, and Adjusting characteristics as the AGC.

Copyright © 2010–2012, Texas Instruments Incorporated

POWER DISSIPATION AND EFFICIENCY

The major benefit of a Class D amplifier is increased efficiency versus a Class AB. The efficiency of the LM48512 is attributed to the region of operation of the transistors in the output stage. The Class D output stage acts as current steering switches, consuming negligible amounts of power compared to their Class AB counterparts. Most of the power loss associated with the output stage is due to the IR loss of the MOSFET on-resistance, along with switching losses due to gate charge.

SHUTDOWN FUNCTION

The LM48512 features a low current shutdown mode. Set $\overline{SDREG}$ = $\overline{SDAMP}$ = GND to disable the amplifier and reduce supply current to 0.04µA.

Switch $\overline{SDREG}$ and $\overline{SDAMP}$ between GND and V_{DD} for minimum current consumption is shutdown. The LM48512 may be disabled with shutdown voltages in between GND and V_{DD}, the idle current will be greater than the typical 0.1µA value. Increased THD+N may also be observed when a voltage of less than V_{DD} is applied to $\overline{SDREG}$ and $\overline{SDAMP}$.

PROPER SELECTION OF EXTERNAL COMPONENTS

Inductor Selection

The LM48512 is designed to use a 2.2µH inductor. When the boost converter is boosting, the inductor will typically be the biggest area of efficiency loss in the boost converter circuitry, therefore, choosing an inductor with the lowest possible series resistance is important. In addition to the series resistance, the saturation rating of the inductor should also be greater than the maximum operating peak current.

Boost Output Capacitor Selection

The boost converter in the LM48512 is designed to operate with a 22µF ceramic output capacitor. When the boost converter is running, the output capacitor supplies the load current during the boost converter on-time. When the NMOS switch turns off, the inductor energy is discharged through the internal PMOS switch, supplying power to the load and restoring charge to the output capacitor. This causes a sag in the output voltage (PVOUT) during the on-time and a rise in the output voltage during the off-time. The output capacitor is chosen to limit this output ripple and to ensure the converter remains stable.

AUDIO AMPLIFIER POWER SUPPLY BYPASSING/FILTERING

Proper power supply bypassing is critical for low noise performance and high PSRR. Place the supply bypass capacitors as close to the device as possible. A 10µF and a 1µF bypass capacitors are recommended to increase supply stability.

AUDIO AMPLIFIER INPUT CAPACITOR SELECTION

Input capacitors may be required for some applications, or when the audio source is single-ended. Input capacitors block the DC component of the audio signal, eliminating any conflict between the DC component of the audio source and the bias voltage of the LM48512. The input capacitors create a high-pass filter with the input resistors R_{IN}. The -3dB point of the high pass filter is found using Equation 1 below.

$$f = 1 / 2\pi R_{IN} C_{IN} \quad (1)$$

Where R_{IN} is the value of the input resistor given in the *Electrical Characteristics* table.

The input capacitors can also be used to remove low frequency content from the audio signal. Small speakers cannot reproduce, and may even be damaged by low frequencies. High pass filtering the audio signal helps protect the speakers. When the LM48512 is using a single-ended source, power supply noise on the ground is seen as an input signal. Setting the high-pass filter point above the power supply noise frequencies (for example, 217Hz in a GSM phone), filters out the noise such that it is not amplified and heard on the output. Capacitors with a tolerance of 10% or better are recommended for impedance matching and improved CMRR and PSRR.

Copyright © 2010–2012, Texas Instruments Incorporated

AUDIO AMPLIFIER GAIN

The LM48512 features three logic configured gain settings. The device gain is selected through the GAIN input. The gain settings are as shown in Table 4.

Table 4. Gain Settings

GAIN pin input	A_V
GND (<0.7V)	6dB
Float (0.7V–1.0V)	15.5dB
V_{DD} (>1.0V)	20dB

SINGLE-ENDED AUDIO AMPLIFIER CONFIGURATION

The LM48512 is compatible with single-ended sources. When configured for single-ended inputs, input capacitors must be used to block and DC component at the input of the device. One thing to note is that the Differential AC Input specification of $5.6V_{P-P}$ (max) will be $2.8V_{P-P}$ in the Single-Ended application. Figure 6 shows the typical single-ended applications circuit.

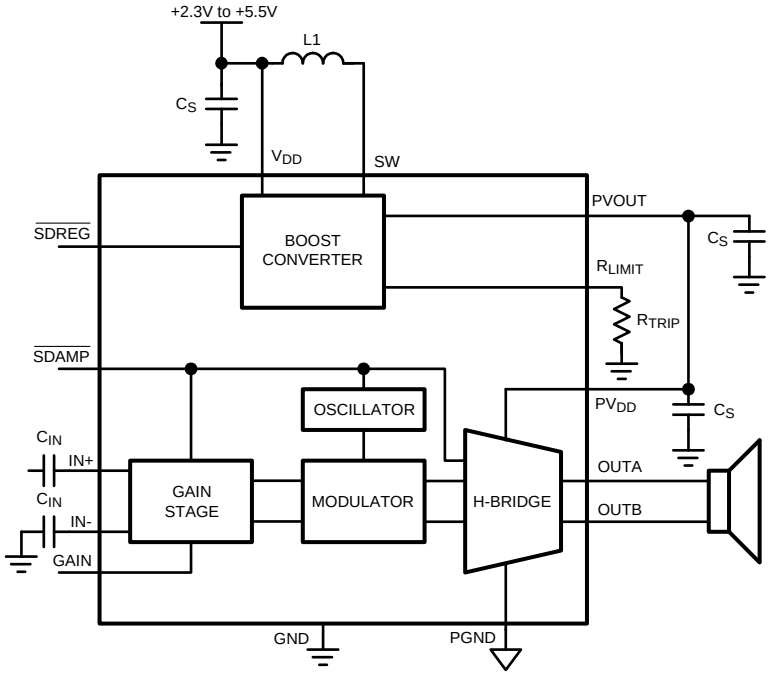

Figure 6. Single-Ended Input Configuration

PCB LAYOUT GUIDELINES

As output power increases, interconnect resistance (PCB traces and wires) between the amplifier, load and power supply create a voltage drop. The voltage loss due to the traces between the LM48512 and the load results in lower output power and decreased efficiency. Higher trace resistance between the supply and the LM48512 has the same effect as a poorly regulated supply, increasing ripple on the supply line, and reducing peak output power. The effects of residual trace resistance increases as output current increases due to higher output power, decreased load impedance or both. To maintain the highest output voltage swing and corresponding peak output power, the PCB traces that connect the output pins to the load and the supply pins to the power supply should be as wide as possible to minimize trace resistance.

The use of power and ground planes will give the best THD+N performance. In addition to reducing trace resistance, the use of power planes creates parasitic capacitors that help to filter the power supply line.

Copyright © 2010–2012, Texas Instruments Incorporated

The inductive nature of the transducer load can also result in overshoot on one of both edges, clamped by the parasitic diodes to GND and V_{DD} in each case. From an EMI standpoint, this is an aggressive waveform that can radiate or conduct to other components in the system and cause interference. In is essential to keep the power and output traces short and well shielded if possible. Use of ground planes beads and micros-strip layout techniques are all useful in preventing unwanted interference.

As the distance from the LM48512 and the speaker increases, the amount of EMI radiation increases due to the output wires or traces acting as antennas become more efficient with length. Ferrite chip inductors places close to the LM48512 outputs may be needed to reduce EMI radiation.

LM48512 Demo Board Schematic

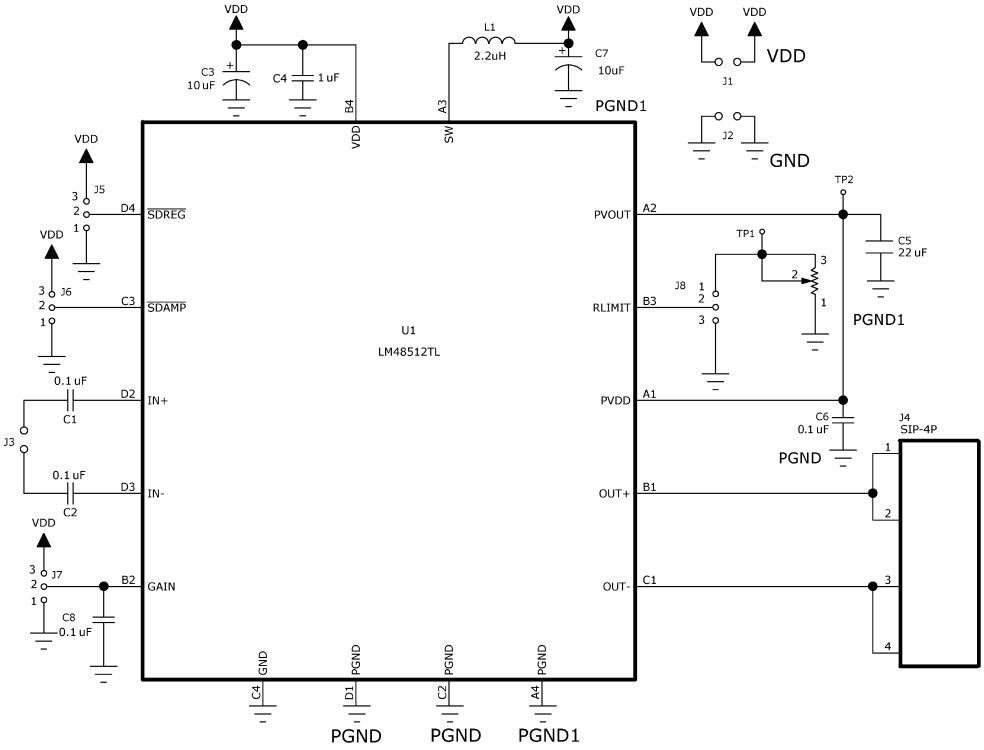

*R_{LIMIT} on demoboard is equilvalent to R_{TRIP} resistor in datasheet.

Figure 7. FIGURE 8. LM48512 Demo Board Schematic

Demo Boards

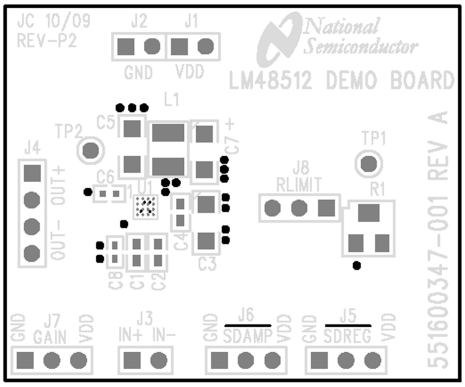

Figure 8. FIGURE 9. Top Silkscreen

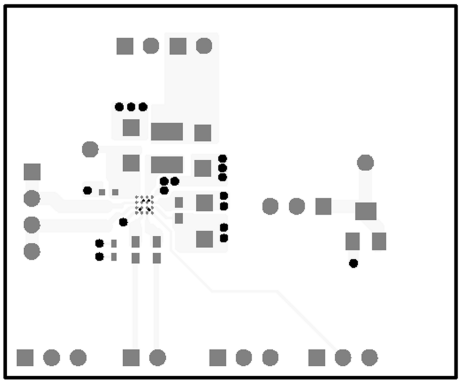

Figure 9. FIGURE 10. Top Layer

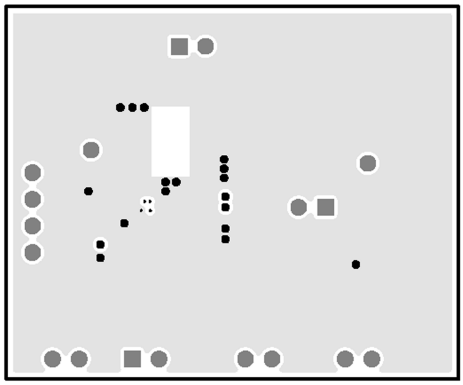

Figure 10. FIGURE 11. Layer 2 (GND)

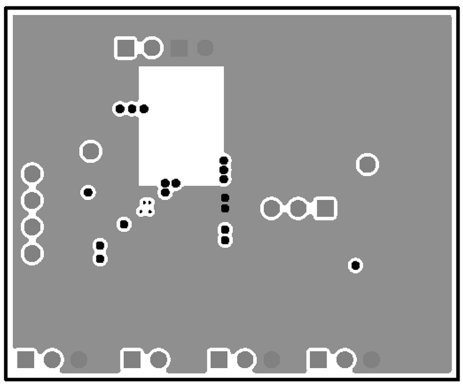

Figure 11. FIGURE 12. Layer 3 (V_{DD})

Copyright © 2010–2012, Texas Instruments Incorporated

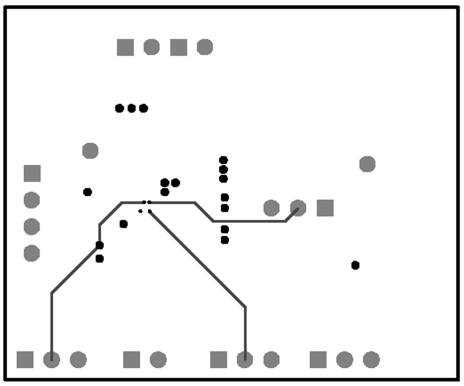

Figure 12. FIGURE 13. Bottom Layer

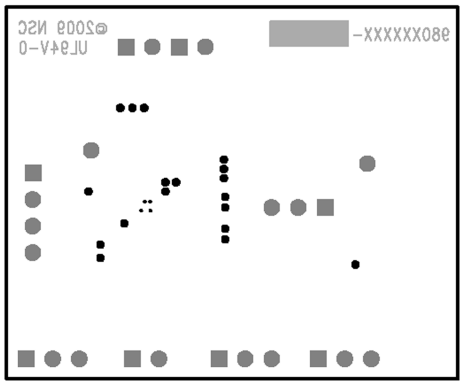

Figure 13. FIGURE 14. Bottom Silkscreen

Revision History

Rev	Date	Description
1.0	04/09/12	Initial WEB released.

Copyright © 2010–2012, Texas Instruments Incorporated

PACKAGING INFORMATION

Orderable Device	Status (1)	Package Type	Package Drawing	Pins	Package Qty	Eco Plan (2)	Lead finish/ Ball material (6)	MSL Peak Temp (3)	Op Temp (°C)	Device Marking (4/5)	Samples
LM48512TL/NOPB	ACTIVE	DSBGA	YZR	16	250	RoHS & Green	SNAGCU	Level-1-260C-UNLIM	-40 to 85	GN3	Samples
LM48512TLX/NOPB	ACTIVE	DSBGA	YZR	16	3000	RoHS & Green	SNAGCU	Level-1-260C-UNLIM	-40 to 85	GN3	Samples

(1) The marketing status values are defined as follows:
ACTIVE: Product device recommended for new designs.
LIFEBUY: TI has announced that the device will be discontinued, and a lifetime-buy period is in effect.
NRND: Not recommended for new designs. Device is in production to support existing customers, but TI does not recommend using this part in a new design.
PREVIEW: Device has been announced but is not in production. Samples may or may not be available.
OBSOLETE: TI has discontinued the production of the device.

(2) **RoHS:** TI defines "RoHS" to mean semiconductor products that are compliant with the current EU RoHS requirements for all 10 RoHS substances, including the requirement that RoHS substance do not exceed 0.1% by weight in homogeneous materials. Where designed to be soldered at high temperatures, "RoHS" products are suitable for use in specified lead-free processes. TI may reference these types of products as "Pb-Free".
RoHS Exempt: TI defines "RoHS Exempt" to mean products that contain lead but are compliant with EU RoHS pursuant to a specific EU RoHS exemption.
Green: TI defines "Green" to mean the content of Chlorine (Cl) and Bromine (Br) based flame retardants meet JS709B low halogen requirements of <=1000ppm threshold. Antimony trioxide based flame retardants must also meet the <=1000ppm threshold requirement.

(3) MSL, Peak Temp. - The Moisture Sensitivity Level rating according to the JEDEC industry standard classifications, and peak solder temperature.

(4) There may be additional marking, which relates to the logo, the lot trace code information, or the environmental category on the device.

(5) Multiple Device Markings will be inside parentheses. Only one Device Marking contained in parentheses and separated by a "~" will appear on a device. If a line is indented then it is a continuation of the previous line and the two combined represent the entire Device Marking for that device.

(6) Lead finish/Ball material - Orderable Devices may have multiple material finish options. Finish options are separated by a vertical ruled line. Lead finish/Ball material values may wrap to two lines if the finish value exceeds the maximum column width.

Important Information and Disclaimer: The information provided on this page represents TI's knowledge and belief as of the date that it is provided. TI bases its knowledge and belief on information provided by third parties, and makes no representation or warranty as to the accuracy of such information. Efforts are underway to better integrate information from third parties. TI has taken and continues to take reasonable steps to provide representative and accurate information but may not have conducted destructive testing or chemical analysis on incoming materials and chemicals. TI and TI suppliers consider certain information to be proprietary, and thus CAS numbers and other limited information may not be available for release.

In no event shall TI's liability arising out of such information exceed the total purchase price of the TI part(s) at issue in this document sold by TI to Customer on an annual basis.

TAPE AND REEL INFORMATION

REEL DIMENSIONS

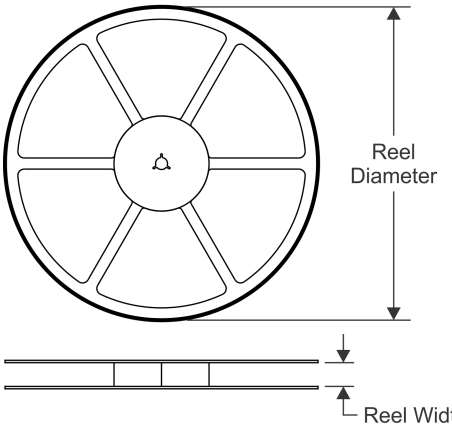

TAPE DIMENSIONS

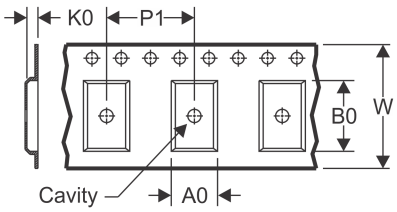

A0	Dimension designed to accommodate the component width
B0	Dimension designed to accommodate the component length
K0	Dimension designed to accommodate the component thickness
W	Overall width of the carrier tape
P1	Pitch between successive cavity centers

QUADRANT ASSIGNMENTS FOR PIN 1 ORIENTATION IN TAPE

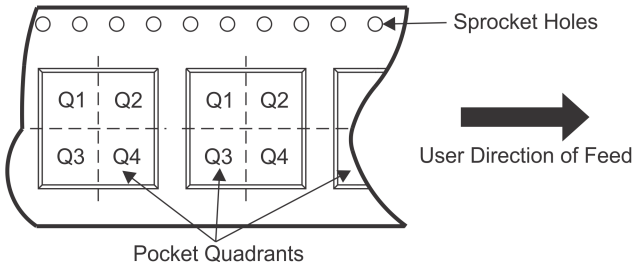

*All dimensions are nominal

Device	Package Type	Package Drawing	Pins	SPQ	Reel Diameter (mm)	Reel Width W1 (mm)	A0 (mm)	B0 (mm)	K0 (mm)	P1 (mm)	W (mm)	Pin1 Quadrant
LM48512TL/NOPB	DSBGA	YZR	16	250	178.0	8.4	2.43	2.48	0.75	4.0	8.0	Q1
LM48512TLX/NOPB	DSBGA	YZR	16	3000	178.0	8.4	2.43	2.48	0.75	4.0	8.0	Q1

TAPE AND REEL BOX DIMENSIONS

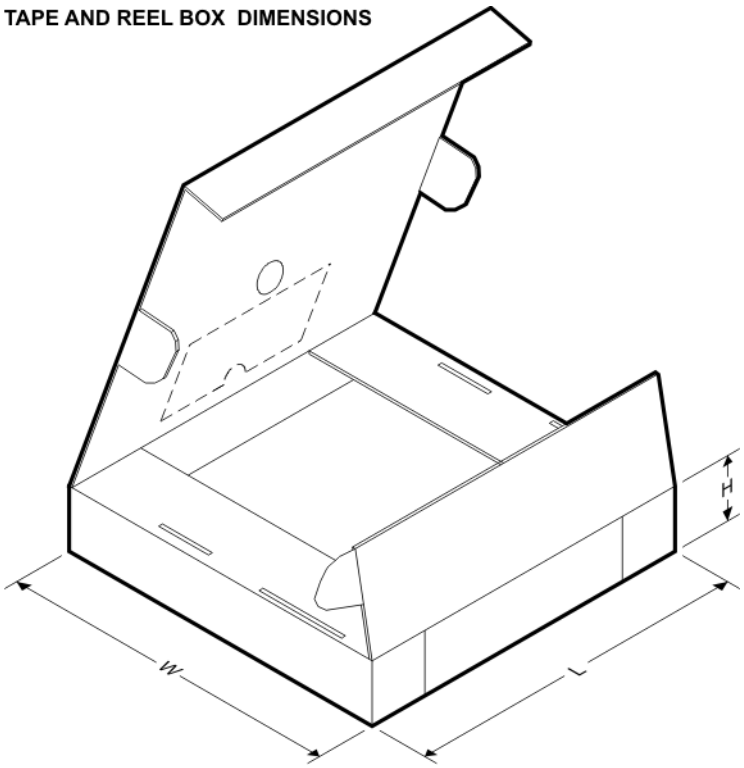

*All dimensions are nominal

Device	Package Type	Package Drawing	Pins	SPQ	Length (mm)	Width (mm)	Height (mm)
LM48512TL/NOPB	DSBGA	YZR	16	250	208.0	191.0	35.0
LM48512TLX/NOPB	DSBGA	YZR	16	3000	208.0	191.0	35.0

YZR0016

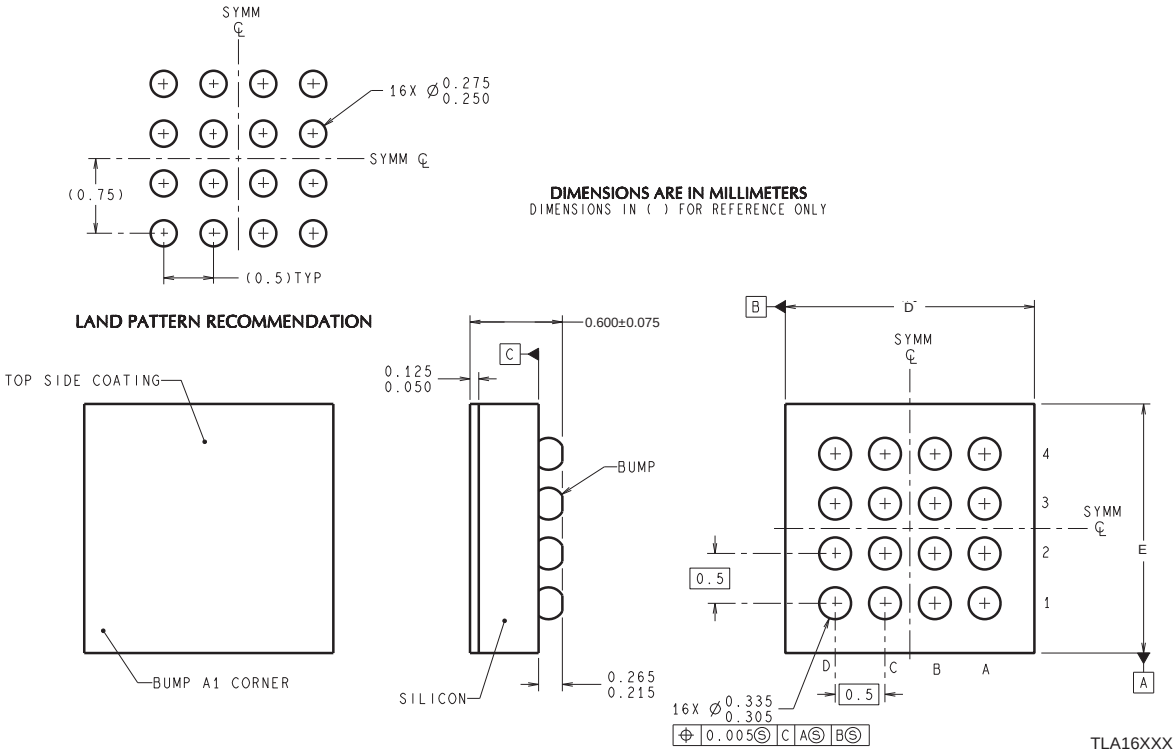

D: Max = 2.44 mm, Min = 2.38 mm

E: Max = 2.39 mm, Min = 2.33 mm

4215051/A 12/12

NOTES: A. All linear dimensions are in millimeters. Dimensioning and tolerancing per ASME Y14.5M-1994.
B. This drawing is subject to change without notice.

IMPORTANT NOTICE AND DISCLAIMER

TI PROVIDES TECHNICAL AND RELIABILITY DATA (INCLUDING DATA SHEETS), DESIGN RESOURCES (INCLUDING REFERENCE DESIGNS), APPLICATION OR OTHER DESIGN ADVICE, WEB TOOLS, SAFETY INFORMATION, AND OTHER RESOURCES “AS IS” AND WITH ALL FAULTS, AND DISCLAIMS ALL WARRANTIES, EXPRESS AND IMPLIED, INCLUDING WITHOUT LIMITATION ANY IMPLIED WARRANTIES OF MERCHANTABILITY, FITNESS FOR A PARTICULAR PURPOSE OR NON-INFRINGEMENT OF THIRD PARTY INTELLECTUAL PROPERTY RIGHTS.

These resources are intended for skilled developers designing with TI products. You are solely responsible for (1) selecting the appropriate TI products for your application, (2) designing, validating and testing your application, and (3) ensuring your application meets applicable standards, and any other safety, security, regulatory or other requirements.

These resources are subject to change without notice. TI grants you permission to use these resources only for development of an application that uses the TI products described in the resource. Other reproduction and display of these resources is prohibited. No license is granted to any other TI intellectual property right or to any third party intellectual property right. TI disclaims responsibility for, and you will fully indemnify TI and its representatives against, any claims, damages, costs, losses, and liabilities arising out of your use of these resources.

TI’s products are provided subject to TI’s Terms of Sale or other applicable terms available either on ti.com or provided in conjunction with such TI products. TI’s provision of these resources does not expand or otherwise alter TI’s applicable warranties or warranty disclaimers for TI products.

TI objects to and rejects any additional or different terms you may have proposed.

Mailing Address: Texas Instruments, Post Office Box 655303, Dallas, Texas 75265
Copyright © 2021, Texas Instruments Incorporated