LMG342xR050 600V 50mΩ 具有集成驱动器、保护和温度报告功能的 GaN FET

1 特性

- 符合面向硬开关拓扑的 JEDEC JEP180 标准
- 带集成栅极驱动器的 600-V GaN-on-Si FET
  - 集成高精度栅极偏置电压
  - 200V/ns CMTI
  - 3.6MHz 开关频率
  - 20V/ns 至 150V/ns 压摆率，用于优化开关性能和缓解 EMI
  - 在 7.5V 至 18V 电源下工作
- 强大的保护
  - 响应时间少于 100 ns 的逐周期过流和锁存短路保护
  - 硬开关时可承受 720V 浪涌
  - 针对内部过热和 UVLO 监控的自我保护
- 高级电源管理
  - 数字温度 PWM 输出
  - 理想二极管模式可减少 LMG3425R050 中的第三象限损耗

2 应用

- 高密度工业电源
- 光伏逆变器和工业电机驱动器
- 不间断电源
- 商用网络和服务器 PSU
- 商用电信整流器

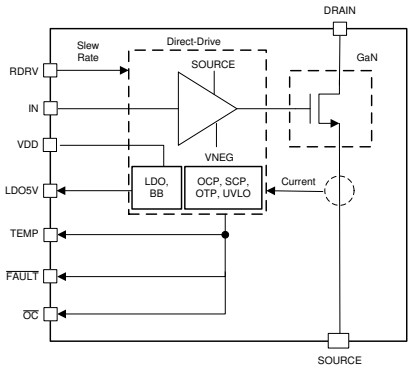

简化版方框图

3 说明

LMG342xR050 GaN FET 具有集成式驱动器和保护功能，可让设计人员在电力电子系统中实现更高水平的功率密度和效率。

LMG342xR050 集成了一个硅驱动器，可实现高达 150 V/ns 的开关速度。与分立式硅栅极驱动器相比，TI 的集成式精密栅极偏置可实现更高的开关 SOA。这种集成特性与 TI 的低电感封装技术相结合，可在硬开关电源拓扑中提供干净的开关和超小的振铃。可调栅极驱动强度允许将压摆率控制在 20 V/ns 至 150 V/ns 之间，这可用于主动控制 EMI 并优化开关性能。LMG3425R050 包含理想二极管模式，该模式通过启用自适应死区时间控制功能来降低第三象限损耗。

高级电源管理功能包括数字温度报告和故障检测。GaN FET 的温度通过可变占空比 PWM 输出进行报告，这可简化器件加载管理。报告的故障包括过热、过流和 UVLO 监控。

器件信息

器件型号	封装 (1)	封装尺寸（标称值）
LMG3422R050	VQFN (54)	12.00mm x 12.00mm
LMG3425R050		

(1) 如需了解所有可用封装，请参阅数据表末尾的可订购产品附录。

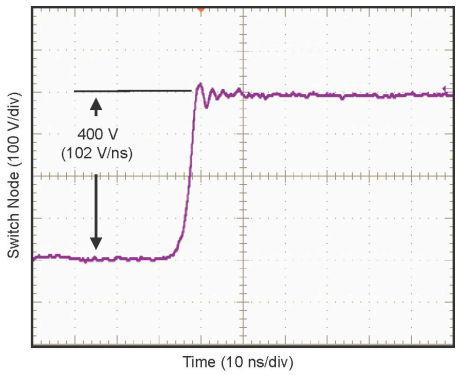

高于 100 V/ns 时的开关性能

本文档旨在为方便起见，提供有关 TI 产品中文版本的信息，以确认产品的概要。有关适用的官方英文版本的最新信息，请访问 www.ti.com，其内容始终优先。TI 不保证翻译的准确性和有效性。在实际设计之前，请务必参考最新版本的英文版本。
English Data Sheet: SNOSDA8

Table of Contents

1 特性 1
2 应用 1
3 说明 1
4 Revision History 2
5 Device Comparison 3
6 Pin Configuration and Functions 4
7 Specifications 5
7.1 Absolute Maximum Ratings 5
7.2 ESD Ratings 5
7.3 Recommended Operating Conditions 5
7.4 Thermal Information 6
7.5 Electrical Characteristics 6
7.6 Switching Characteristics 8
7.7 Typical Characteristics 10
8 Parameter Measurement Information 12
8.1 Switching Parameters 12
9 Detailed Description 15
9.1 Overview 15
9.2 Functional Block Diagram 16
9.3 Feature Description 17
9.4 Start Up Sequence 27
9.5 Safe Operation Area (SOA) 28
9.6 Device Functional Modes 29
10 Application and Implementation 30
10.1 Application Information 30
10.2 Typical Application 31
10.3 Do's and Don'ts 34
11 Power Supply Recommendations 35
11.1 Using an Isolated Power Supply 35
11.2 Using a Bootstrap Diode 35
12 Layout 37
12.1 Layout Guidelines 37
12.2 Layout Examples 39
13 Device and Documentation Support 41
13.1 Documentation Support 41
13.2 接收文档更新通知 41
13.3 支持资源 41
13.4 Trademarks 41
13.5 Electrostatic Discharge Caution 41
13.6 Export Control Notice 41
13.7 术语表 41
14 Mechanical, Packaging, and Orderable Information 41

4 Revision History

注：以前版本的页码可能与当前版本的页码不同

Changes from Revision A (April 2021) to Revision B (May 2022)	Page
• 将数据表状态从“预告信息”更改为“量产数据”	1

Copyright © 2022 Texas Instruments Incorporated

5 Device Comparison

DEVICE NAME	DUAL OVERCURRENT / SHORT-CIRCUIT PROTECTION	TEMPERATURE REPORTING	OPERATIONAL IDEAL-DIODE MODE
LMG3422R050	Yes	Yes	No
LMG3425R050	Yes	Yes	Yes

Copyright © 2022 Texas Instruments Incorporated

6 Pin Configuration and Functions

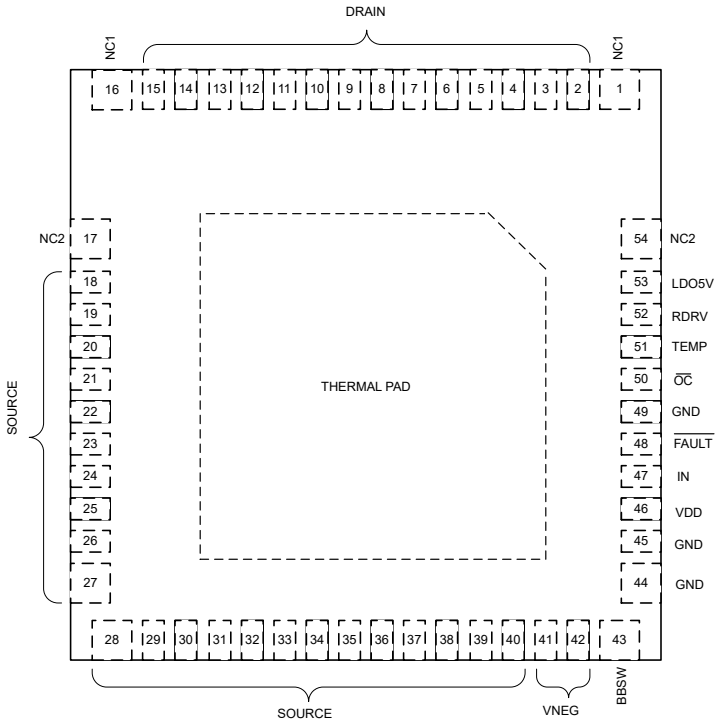

图 6-1. RQZ Package 54-Pin VQFN (Top View)

表 6-1. Pin Functions

PIN		TYPE(1)	DESCRIPTION
NAME	NO.		
NC1	1, 16	—	Used to anchor QFN package to PCB. Pins must be soldered to PCB landing pads. The PCB landing pads are non-solder mask defined pads and must not be physically connected to any other metal on the PCB. Internally connected to DRAIN.
DRAIN	2-15	P	GaN FET drain. Internally connected to NC1.
NC2	17, 54	—	Used to anchor QFN package to PCB. Pins must be soldered to PCB landing pads. The PCB landing pads are non-solder mask defined pads and must not be physically connected to any other metal on the PCB. Internally connected to SOURCE, GND, and THERMAL PAD.
SOURCE	18-40	P	GaN FET source. Internally connected to GND, NC2, and THERMAL PAD.
VNEG	41-42	P	Internal buck-boost converter negative output. Used as the negative supply to turn off the depletion mode GaN FET. Bypass to ground with a 2.2-µF capacitor.
BBSW	43	P	Internal buck-boost converter switch pin. Connect an inductor from this point to ground.
GND	44, 45, 49	G	Signal ground. Internally connected to SOURCE, NC2, and THERMAL PAD.
VDD	46	P	Device input supply.
IN	47	I	CMOS-compatible non-inverting input used to turn the FET on and off.
$\overline{\text{FAULT}}$	48	O	Push-pull digital output that asserts low during a fault condition. Refer to *Fault Detection* for details.
$\overline{\text{OC}}$	50	O	Push-pull digital output that asserts low during overcurrent and short-circuit fault conditions. Refer to *Fault Detection* for details.
TEMP	51	O	Push-pull digital output that gives information about the GaN FET temperature. Outputs a fixed 9-kHz pulsed waveform. The device temperature is encoded as the duty cycle of the waveform.
RDRV	52	I	Drive strength selection pin. Connect a resistor from this pin to ground to set the turn-on drive strength to control slew rate. Tie the pin to GND to enable 150 V/ns and tie the pin to LDO5V to enable 100 V/ns.
LDO5V	53	P	5-V LDO output for external digital isolator
THERMAL PAD	—	—	Thermal pad. Internally connected to SOURCE, GND, and NC2. The thermal pad can be used to conduct rated device current.

(1) I = input, O = output, P = power, G = ground

Copyright © 2022 Texas Instruments Incorporated

7 Specifications

7.1 Absolute Maximum Ratings

Unless otherwise noted: voltages are respect to GND[1]

			MIN	MAX	UNIT
V_{DS}	Drain-source voltage, FET off			600	V
$V_{DS(surge)}$	Drain-source voltage, FET switching, surge condition[2]			720	V
$V_{DS(tr)(surge)}$	Drain-source transient ringing peak voltage, FET off, surge condition[2] [3]			800	V
	Pin voltage	VDD	–0.3	20	V
		LDO5V	–0.3	5.5	V
		VNEG	–16	0.3	V
		BBSW	V_{VNEG} – 1	V_{VDD}+0.5	V
		IN	–0.3	20	V
		$\overline{FAULT}$, $\overline{OC}$, TEMP	–0.3	V_{LDO5V}+0.3	V
		RDRV	–0.3	5.5	V
$I_{D(RMS)}$	Drain RMS current, FET on			44	A
$I_{D(pulse)}$	Drain pulsed current, FET on, tp < 10 µs[4]		–96	Internally Limited	A
$I_{S(pulse)}$	Source pulsed current, FET off, tp < 1 µs			60	A
T_J	Operating junction temperature[5]		–40	150	°C
T_{stg}	Storage temperature		–55	150	°C

(1) Stresses beyond those listed under *Absolute Maximum Rating* may cause permanent damage to the device. These are stress ratings only, which do not imply functional operation of the device at these or any other conditions beyond those indicated under *Recommended Operating Condition*. Exposure to absolute-maximum-rated conditions for extended periods may affect device reliability.
(2) See 节 9.3.3 for an explanation of the switching cycle drain-source voltage ratings.
(3) t1 < 200 ns in 图 9-1.
(4) The positive pulsed current must remain below the overcurrent threshold to avoid the FET being automatically shut off. The FET drain intrinsic positive pulsed current rating for t_p < 10 µs is 96 A.
(5) Refer to the Electrical and Switching Characteristics Tables for junction temperature test conditions.

7.2 ESD Ratings

PARAMETER			VALUE	UNIT
$V_{(ESD)}$	Electrostatic discharge	Human-body model (HBM), per ANSI/ESDA/JEDEC JS-001[1]	±2000	V
		Charged-device model (CDM), per ANSI/ESDA/JEDEC JS-002[2]	±500	

(1) JEDEC document JEP155 states that 500-V HBM allows safe manufacturing with a standard ESD control process.
(2) JEDEC document JEP157 states that 250-V CDM allows safe manufacturing with a standard ESD control process.

7.3 Recommended Operating Conditions

Unless otherwise noted: voltages are respect to GND, SOURCE connected to GND

			MIN	NOM	MAX	UNIT
	Supply voltage	VDD (Maximum switching frequency derated for V_{VDD} < 9 V)	7.5	12	18	V
	Input voltage	IN	0	5	18	V
$I_{D(RMS)}$	Drain RMS current				32	A
	Positive source current	LDO5V			25	mA
R_{RDRV}	RDRV to GND resistance from external slew-rate control resistor		0		500	kΩ
C_{VNEG}	VNEG to GND capacitance from external bypass capacitor		1		10	uF

7.3 Recommended Operating Conditions (continued)

Unless otherwise noted: voltages are respect to GND, SOURCE connected to GND

		MIN	NOM	MAX	UNIT
L_{BBSW}	BBSW to GND inductance from external buck-boost inductor (1)	3	4.7	10	uH

(1) > 1 A current rating is recommended.

7.4 Thermal Information

THERMAL METRIC(1)		LMG342xR050 RQZ (VQFN) 54 PINS	UNIT
$R_{\theta JC(bot,avg)}$	Junction-to-case (bottom) average thermal resistance	0.88	°C/W

(1) For more information about traditional and new thermal metrics, see the Semiconductor and IC Package Thermal Metrics application report.

7.5 Electrical Characteristics

Unless otherwise noted: voltage, resistance, capacitance, and inductance are respect to GND; –40℃ ≤ T_J ≤ 125℃; V_{DS} = 480 V; 9 V ≤ V_{VDD} ≤ 18 V; V_{IN} = 0 V; RDRV connected to LDO5V; L_{BBSW} = 4.7 µH

PARAMETER		TEST CONDITIONS	MIN	TYP	MAX	UNIT
GAN POWER TRANSISTOR						
$R_{DS(on)}$	Drain-source on resistance	V_{IN} = 5 V, T_J = 25°C		43	55	mΩ
		V_{IN} = 5 V, T_J = 125°C		73		mΩ
V_{SD}	Third-quadrant mode source-drain voltage	I_S = 0.1 A		3.8		V
		I_S = 15 A	3	5.3		V
I_{DSS}	Drain leakage current	V_{DS} = 600 V, T_J = 25°C		1		uA
		V_{DS} = 600 V, T_J = 125°C		7		uA
C_{OSS}	Output capacitance	V_{DS} = 400 V		110		pF
$C_{O(er)}$	Energy related effective output capacitance	V_{DS} = 0 V to 400 V		155		pF
$C_{O(tr)}$	Time related effective output capacitance			235		pF
Q_{OSS}	Output charge			100		nC
Q_{RR}	Reverse recovery charge			0		nC
VDD – SUPPLY CURRENTS						
	VDD quiescent current (LMG3422)	V_{VDD} = 12 V, V_{IN} = 0 V or 5V		700	1200	uA
	VDD quiescent current (LMG3425)	V_{VDD} = 12 V, V_{IN} = 0 V or 5V		780	1300	uA
	VDD operating current	V_{VDD} = 12 V, f_{IN} = 140 kHz, soft-switching		9	10.5	mA
BUCK BOOST CONVERTER						
	VNEG output voltage	VNEG sinking 40 mA		–14		V
$I_{BBSW,PK(low)}$	Peak BBSW sourcing current at low peak current mode setting (Peak external buck-boost inductor current)		0.3	0.4	0.5	A
$I_{BBSW,PK(high)}$	Peak BBSW sourcing current at high peak current mode setting (Peak external buck-boost inductor current)		0.8	1	1.2	A
	High peak current mode setting enable – IN positive-going threshold frequency		280	420	515	kHz
LDO5V						

Copyright © 2022 Texas Instruments Incorporated

7.5 Electrical Characteristics (continued)

Unless otherwise noted: voltage, resistance, capacitance, and inductance are respect to GND; –40℃ ≤ T_J ≤ 125℃; V_{DS} = 480 V; 9 V ≤ V_{VDD} ≤ 18 V; V_{IN} = 0 V; RDRV connected to LDO5V; L_{BBSW} = 4.7 µH

PARAMETER		TEST CONDITIONS	MIN	TYP	MAX	UNIT
	Output voltage	LDO5V sourcing 25 mA	4.75	5	5.25	V
	Short-circuit current		25	50	100	mA
IN						
$V_{IN,IT+}$	Positive-going input threshold voltage		1.7	1.9	2.45	V
$V_{IN,IT-}$	Negative-going input threshold voltage		0.7	1	1.3	V
	Input threshold hysteresis		0.7	0.9	1.3	V
	Input pulldown resistance	V_{IN} = 2 V	100	150	200	kΩ
$\overline{FAULT}$, $\overline{OC}$, TEMP – OUPUT DRIVE						
	Low-level output voltage	Output sinking 8 mA		0.16	0.4	V
	High-level output voltage	Output sourcing 8 mA, Measured as V_{LDO5V} – V_O		0.2	0.45	V
VDD, VNEG – UNDER VOLTAGE LOCKOUT						
$V_{VDD,T+}$ (UVLO)	VDD UVLO – positive-going threshold voltage		6.5	7	7.5	V
	VDD UVLO – negative-going threshold voltage		6.1	6.5	7	V
	VDD UVLO – Input threshold voltage hysteresis			510		mV
	VNEG UVLO – negative-going threshold voltage		–13.6	–13.0	–12.3	V
	VNEG UVLO – positive-going threshold voltage		–13.2	–12.75	–12.1	V
GATE DRIVER						
	Turn-on slew rate	From V_{DS} < 320 V to V_{DS} < 80 V, RDRV disconnected from LDO5V, R_{RDRV} = 300 kΩ, T_J = 25℃, V_{BUS} = 400 V, L_{HB} current = 10 A, see 图 8-1		20		V/ns
		From V_{DS} < 320 V to V_{DS} < 80 V, RDRV tied to LDO5V, T_J = 25℃, V_{BUS} = 400 V, L_{HB} current = 10 A, see 图 8-1		100		V/ns
		From V_{DS} < 320 V to V_{DS} < 80 V, RDRV disconnected from LDO5V, R_{RDRV} = 0 Ω, T_J = 25℃, V_{BUS} = 400 V, L_{HB} current = 10 A, see 图 8-1		150		V/ns
	Maximum GaN FET switching frequency.	V_{NEG} rising to > –13.25 V, soft-switched, maximum switching frequency derated for V_{VDD} < 9 V	3.6			MHz
FAULTS						
$I_{T(OC)}$	DRAIN overcurrent fault – threshold current		40	50	60	A
$I_{T(SC)}$	DRAIN short-circuit fault – threshold current		60	75	90	A
$di/dt_{T(SC)}$	di/dt threshold between overcurrent and short-circuit faults		150			A/µs
	GaN temperature fault – postive-going threshold temperature			175		°C
	GaN Temperature fault – threshold temperature hysteresis			30		°C

7.5 Electrical Characteristics (continued)

Unless otherwise noted: voltage, resistance, capacitance, and inductance are respect to GND; –40℃ ≤ T_J ≤ 125℃; V_{DS} = 480 V; 9 V ≤ V_{VDD} ≤ 18 V; V_{IN} = 0 V; RDRV connected to LDO5V; L_{BBSW} = 4.7 µH

PARAMETER		TEST CONDITIONS	MIN	TYP	MAX	UNIT
	Driver temperature fault – positive-going threshold temperature			185		°C
	Driver Temperature fault – threshold temperature hysteresis			20		°C
TEMP						
	Output Frequency		4.5	9	14	kHz
	Output PWM Duty Cycle	GaN T_J = 150℃		82		%
		GaN T_J = 125℃	58.5	64.6	70	%
		GaN T_J = 85℃	36.2	40	43.7	%
		GaN T_J = 25℃	0.3	3	6	%
IDEAL-DIODE MODE CONTROL						
$V_{T(3rd)}$	Drain-source third-quadrant detection – threshold voltage		–0.15	0	0.15	V
$I_{T(ZC)}$	Drain zero-current detection – threshold current	0℃ ≤ T_J ≤ 125℃	–0.2	0	0.2	A
		–40℃ ≤ T_J ≤ 0℃	–0.35	0	0.35	A

7.6 Switching Characteristics

Unless otherwise noted: voltage, resistance, capacitance, and inductance are respect to GND; –40℃ ≤ T_J ≤ 125℃; V_{DS} = 480 V; 9 V ≤ V_{VDD} ≤ 18 V; V_{IN} = 0 V; RDRV connected to LDO5V; L_{BBSW} = 4.7 µH

PARAMETER		TEST CONDITIONS	MIN	TYP	MAX	UNIT
SWITCHING TIMES						
$t_{d(on)}$ (Idrain)	Drain-current turn-on delay time	From V_{IN} > $V_{IN,IT+}$ to I_D > 1 A, V_{BUS} = 400 V, L_{HB} current = 10 A, see 图 8-1 and 图 8-2		28	42	ns
$t_{d(on)}$	Turn-on delay time	From V_{IN} > $V_{IN,IT+}$ to V_{DS} < 320 V, V_{BUS} = 400 V, L_{HB} current = 10 A, see 图 8-1 and 图 8-2		32	52	ns
$t_{r(on)}$	Turn-on rise time	From V_{DS} < 320 V to V_{DS} < 80 V, V_{BUS} = 400 V, L_{HB} current = 10 A, see 图 8-1 and 图 8-2		2.5	4	ns
$t_{d(off)}$	Turn-off delay time	From V_{IN} < $V_{IN,IT-}$ to V_{DS} > 80 V, V_{BUS} = 400 V, L_{HB} current = 10 A, see 图 8-1 and 图 8-2		44	65	ns
$t_{f(off)}$	Turn-off fall time(1)	From V_{DS} > 80 V to V_{DS} > 320 V, V_{BUS} = 400 V, L_{HB} current = 10 A, see 图 8-1 and 图 8-2			21	ns
	Minimum IN high pulse-width for FET turn-on	V_{IN} rise/fall times < 1 ns, V_{DS} falls to < 200 V, V_{BUS} = 400 V, L_{HB} current = 10 A, see 图 8-1			24	ns
STARTUP TIMES						
$t_{(start)}$	Driver start-up time	From V_{VDD} > $V_{VDD,T+}$ (UVLO) to $\overline{FAULT}$ high, C_{LDO5V} = 100 nF, C_{VNEG} = 2.2 µF at 0-V bias linearly decreasing to 1.5 µF at 15-V bias		310	470	us
FAULT TIMES						
$t_{off(OC)}$	Overcurrent fault FET turn-off time, FET on before overcurrent	V_{IN} = 5 V, From I_D > $I_{T(OC)}$ to I_D < 50 A, I_D di/dt = 100 A/µs		110	145	ns

Copyright © 2022 Texas Instruments Incorporated

7.6 Switching Characteristics (continued)

Unless otherwise noted: voltage, resistance, capacitance, and inductance are respect to GND; –40℃ ≤ T_J ≤ 125℃; V_{DS} = 480 V; 9 V ≤ V_{VDD} ≤ 18 V; V_{IN} = 0 V; RDRV connected to LDO5V; L_{BBSW} = 4.7 µH

PARAMETER		TEST CONDITIONS	MIN	TYP	MAX	UNIT
$t_{off(SC)}$	Short-circuit current fault FET turn-off time, FET on before short circuit	V_{IN} = 5 V, From I_D > $I_{T(SC)}$ to I_D < 50 A, I_D di/dt = 700 A/µs		65	100	ns
	Overcurrent fault FET turn-off time, FET turning on into overcurrent	From I_D > $I_{T(OC)}$ to I_D < 50 A		200	250	ns
	Short-circuit fault FET turn-off time, FET turning on into short circuit	From I_D > $I_{T(SC)}$ to I_D < 50 A		100	180	ns
	IN reset time to clear $\overline{FAULT}$ latch	From V_{IN} < $V_{IN,IT-}$ to $\overline{FAULT}$ high	250	380	580	us
$t_{(window)(OC)}$	Overcurrent fault to short-circuit fault window time			50		ns
IDEAL-DIODE MODE CONTROL TIMES						
	Ideal-diode mode FET turn-on time	V_{DS} < $V_{T(3rd)}$ to FET turn-on, V_{DS} being discharged by half-bridge configuration inductor at 5 A		50	65	ns
	Ideal-diode mode FET turn-off time	I_D > $I_{T(ZC)}$ to FET turn-off, I_D di/dt = 100 A/µs created with a half-bridge configuration		50	76	ns
	Overtemperature-shutdown ideal-diode mode IN falling blanking time		150	230	360	ns

(1) During turn-off, V_{DS} rise time is the result of the resonance of C_{OSS} and loop inductance as well as load current.

7.7 Typical Characteristics

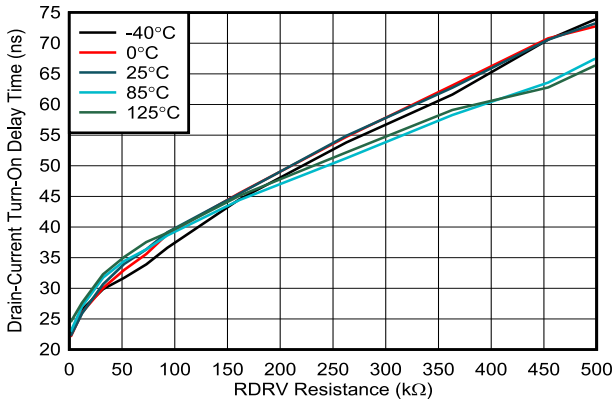

图 7-1. Drain-Current Turn-On Delay Time vs Drive Strength Resistance

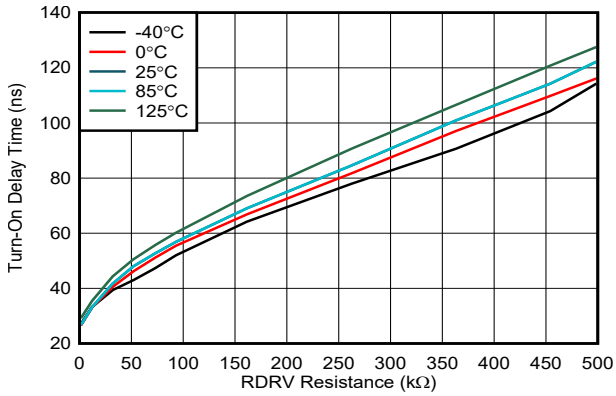

图 7-2. Turn-On Delay Time vs Drive Strength Resistance

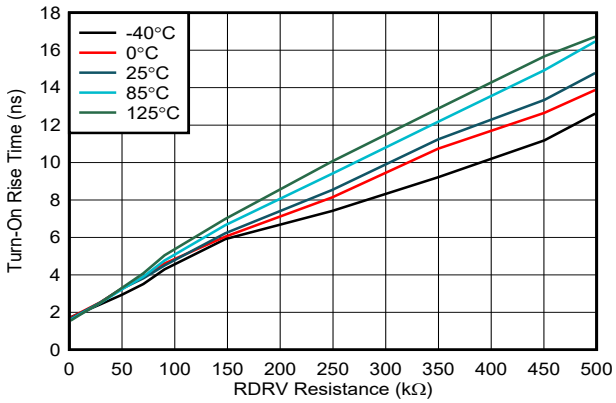

图 7-3. Turn-On Rise Time vs Drive Strength Resistance

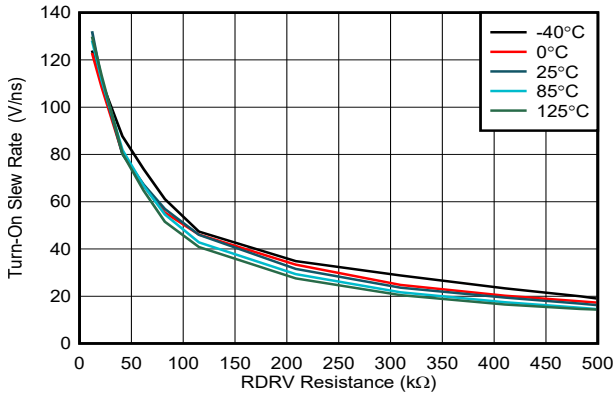

图 7-4. Turn-On Slew Rate vs Drive Strength Resistance

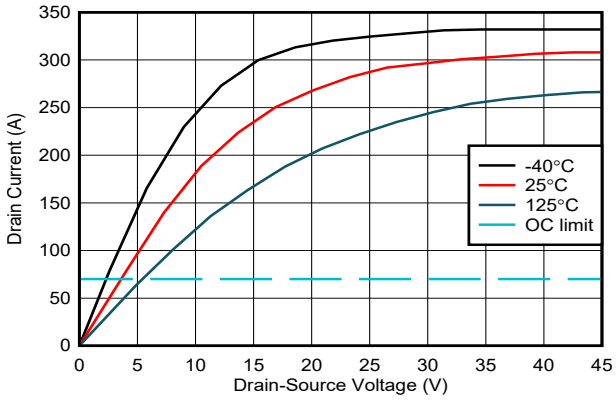

图 7-5. Drain Current vs Drain-Source Voltage

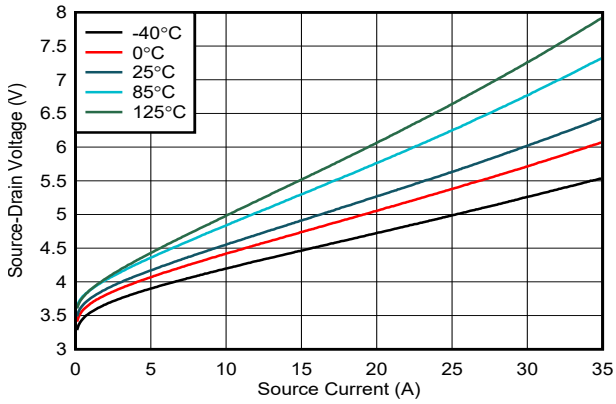

IN = 0 V

图 7-6. Off-State Source-Drain Voltage vs Source Current

Copyright © 2022 Texas Instruments Incorporated

7.7 Typical Characteristics (continued)

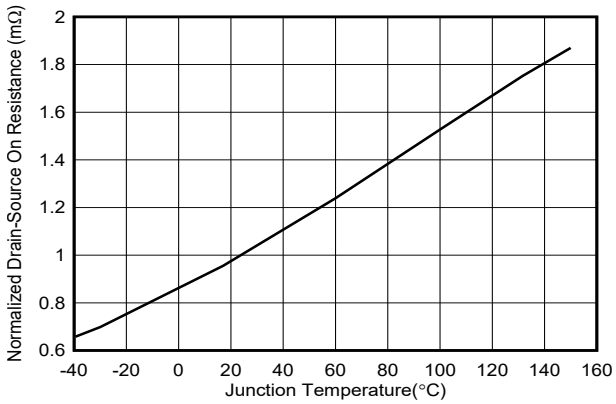

图 7-7. Normalized On-Resistance vs Junction Temperatue

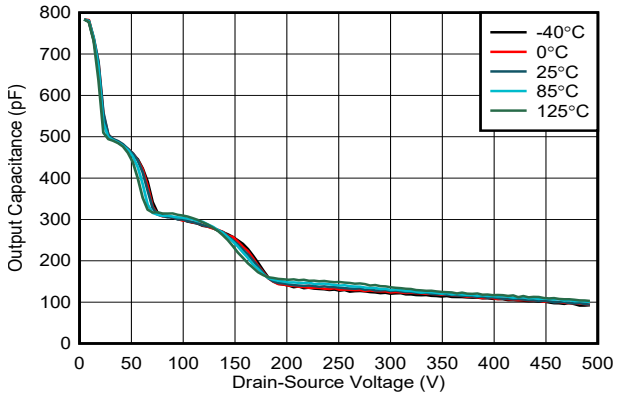

图 7-8. Output Capacitance vs Drain-Source Voltage

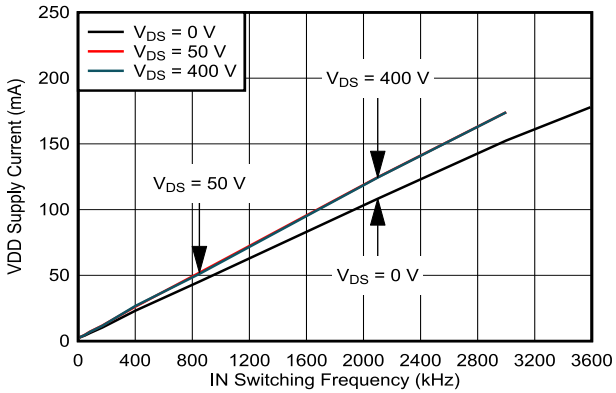

VDD = 12 V; T_J = 25 °C.

图 7-9. VDD Supply Current vs IN Switching Frequency

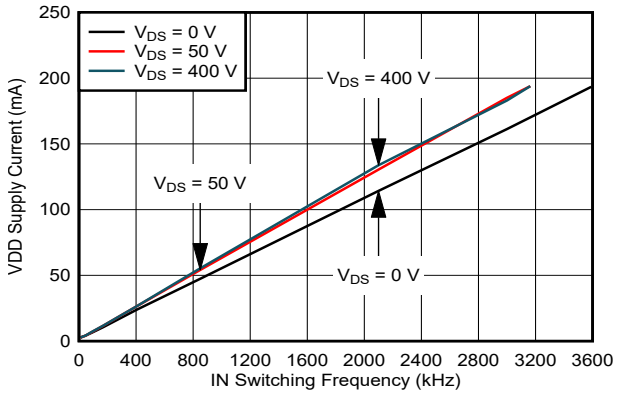

VDD = 12 V; T_J = 125 °C.

图 7-10. VDD Supply Current vs IN Switching Frequency

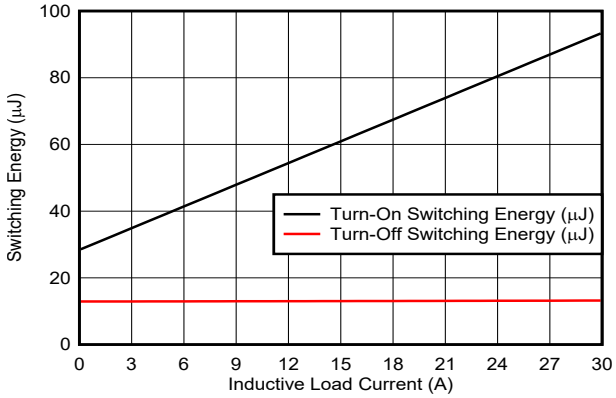

图 7-11. Half-Bridge Switching Energy vs Inductive Load Current

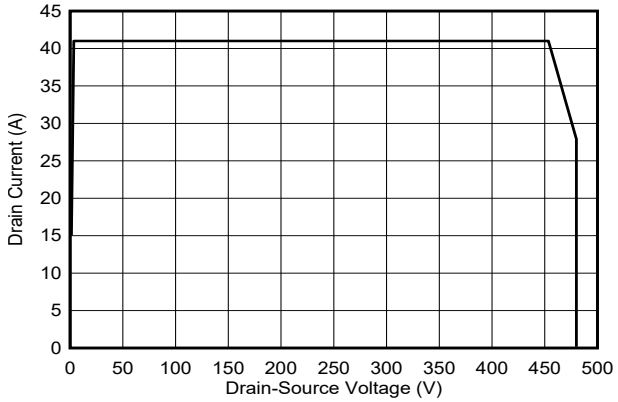

图 7-12. Repetitive Safe Operation Area

8 Parameter Measurement Information

8.1 Switching Parameters

图 8-1 shows the circuit used to measure most switching parameters. The top device in this circuit is used to re-circulate the inductor current and functions in third-quadrant mode only. Only the LMG3422R050 must be used as the top device as it does not have the ideal-diode mode feature. Do not use the LMG3425R050 for the top device. If the top device has the ideal-diode mode feature, it will automatically turn on the GaN FET when the inductor current is re-circulating and cause a shoot-through current event when the bottom device turns on. The bottom device is the active device that turns on to increase the inductor current to the desired test current. The bottom device is then turned off and on to create switching waveforms at a specific inductor current. Both the drain current (at the source) and the drain-source voltage is measured. 图 8-2 shows the specific timing measurement. TI recommends to use the half-bridge as double pulse tester. Excessive third-quadrant operation can overheat the top device.

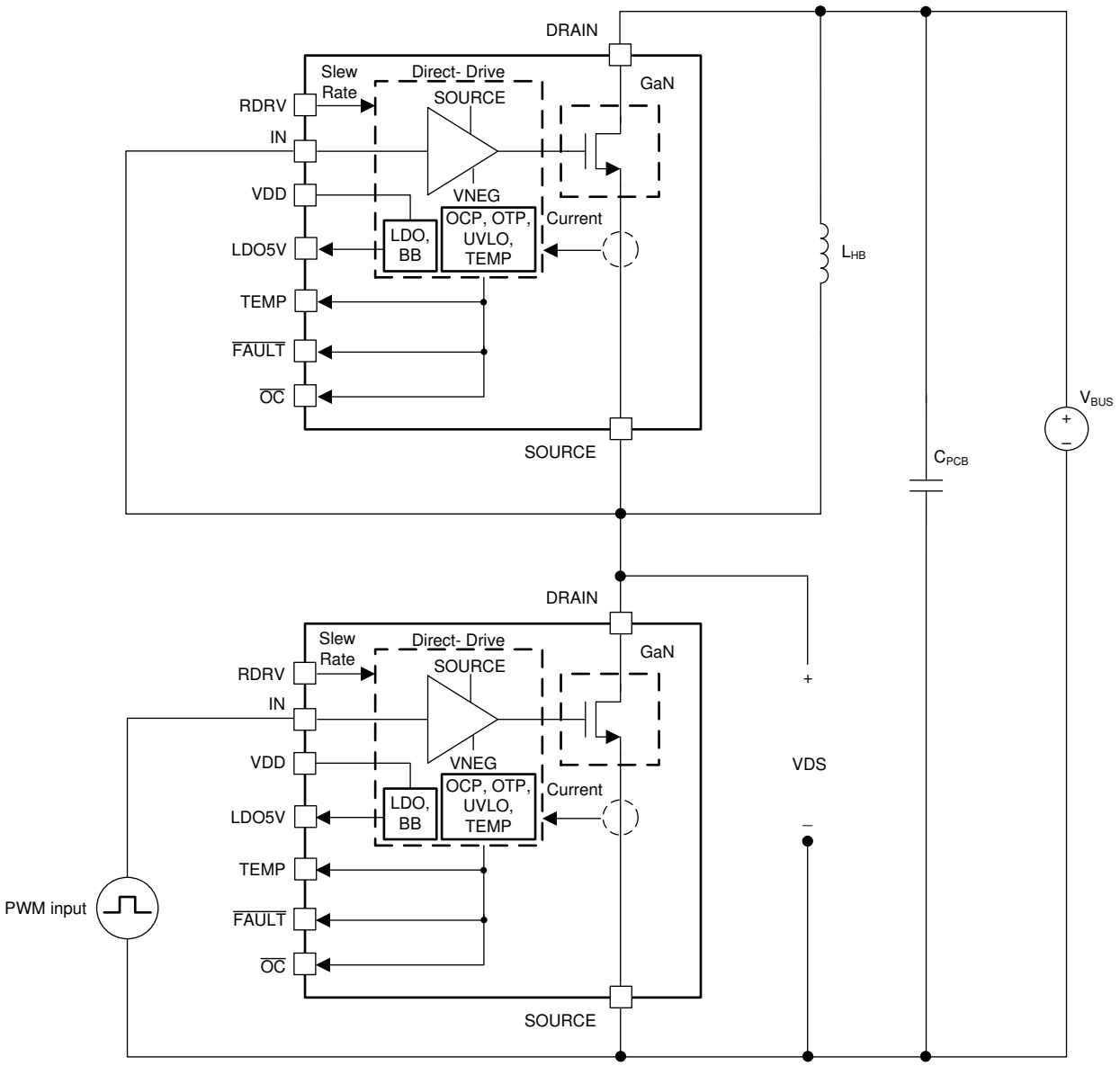

图 8-1. Circuit Used to Determine Switching Parameters

Copyright © 2022 Texas Instruments Incorporated

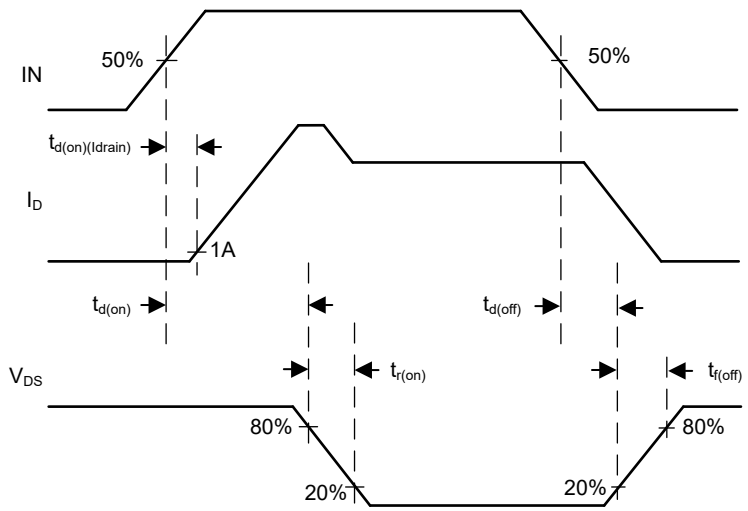

图 8-2. Measurement to Determine Propagation Delays and Slew Rates

8.1.1 Turn-On Times

The turn-on transition has three timing components: drain-current turn-on delay time, turn-on delay time, and turn-on rise time. The drain-current turn-on delay time is from when IN goes high to when the GaN FET drain-current reaches 1 A. The turn-on delay time is from when IN goes high to when the drain-source voltage falls 20% below the bus voltage. Finally, the turn-on rise time is from when drain-source voltage falls 20% below the bus voltage to when the drain-source voltage falls 80% below the bus voltage. Note that the turn-on rise time is the same as the V_{DS} 80% to 20% fall time. All three turn-on timing components are a function of the RDRV pin setting.

8.1.2 Turn-Off Times

The turn-off transition has two timing components: turn-off delay time, and turn-off fall time. The turn-off delay time is from when IN goes low to when the drain-source voltage rises to 20% of the bus voltage. The turn-off fall time is from when the drain-source voltage rises to 20% of the bus voltage to when the drain-source voltage rises to 80% of the bus voltage. Note that the turn-off fall time is the same as the V_{DS} 20% to 80% rise time. The turn-off timing components are independent of the RDRV pin setting, but heavily dependent on the L_{HB} load current.

8.1.3 Drain-Source Turn-On Slew Rate

The drain-source turn-on slew rate, measured in volts per nanosecond, is the inverse of the turn-on rise time or equivalently the inverse of the V_{DS} 80% to 20% fall time. The RDRV pin is used to program the slew rate.

Copyright © 2022 Texas Instruments Incorporated

8.1.4 Turn-On and Turn-Off Switching Energy

The turn-on and turn-off switching energy shown in 图 7-11 represent the energy absorbed by the low-side device during the turn-on and turn-off transients of the circuit. As the circuit in 图 8-1 represents a boost converter with input shorted to output, the switching energy is dissipated in the low-side device. The turn-on transition is lossy while the turn-off transition is essentially lossless with the output capacitance energy charged by the inductor current. The turn-on and turn-off losses have been calculated from experimental waveforms by integrating the product of the drain current with the drain-source voltage over the turn-on and turn-off times, respectively. The skew of probes for voltage and current are very important for accurate measurement of turn-on and turn-off energy.

Copyright © 2022 Texas Instruments Incorporated

9 Detailed Description

9.1 Overview

The LMG342xR050 is a high-performance power GaN device with integrated gate driver. The GaN device offers zero reverse recovery and ultra-low output capacitance, which enables high efficiency in bridge-based topologies. Direct Drive architecture is applied to control the GaN device directly by the integrated gate driver. This architecture provides superior switching performance compared to the traditional cascode approach and helps solve a number of challenges in GaN applications.

The integrated driver ensures the device stays off for high drain slew rates. The integrated driver also protects the GaN device from overcurrent, short-circuit, undervoltage, and overtemperature. Regarding fault signal reporting, LMG342xR050 provides different reporting method which is shown in 表 9-1. Refer to *Fault Detection* for more details. The integrated driver is also able to sense the die temperature and send out the temperature signal through a modulated PWM signal.

Unlike Si MOSFETs, GaN devices do not have a p-n junction from source to drain and thus have no reverse recovery charge. However, GaN devices still conduct from source to drain similar to a p-n junction body diode, but with higher voltage drop and higher conduction loss. Therefore, source-to-drain conduction time must be minimized while the LMG342xR050 GaN FET is turned off. The ideal-diode mode feature in the LMG3425R050 automatically minimizes the source-to-drain conduction loss that occur on the GaN FET soft-switched turn-on edge, similar to optimum dead-time control.

Copyright © 2022 Texas Instruments Incorporated

9.2 Functional Block Diagram

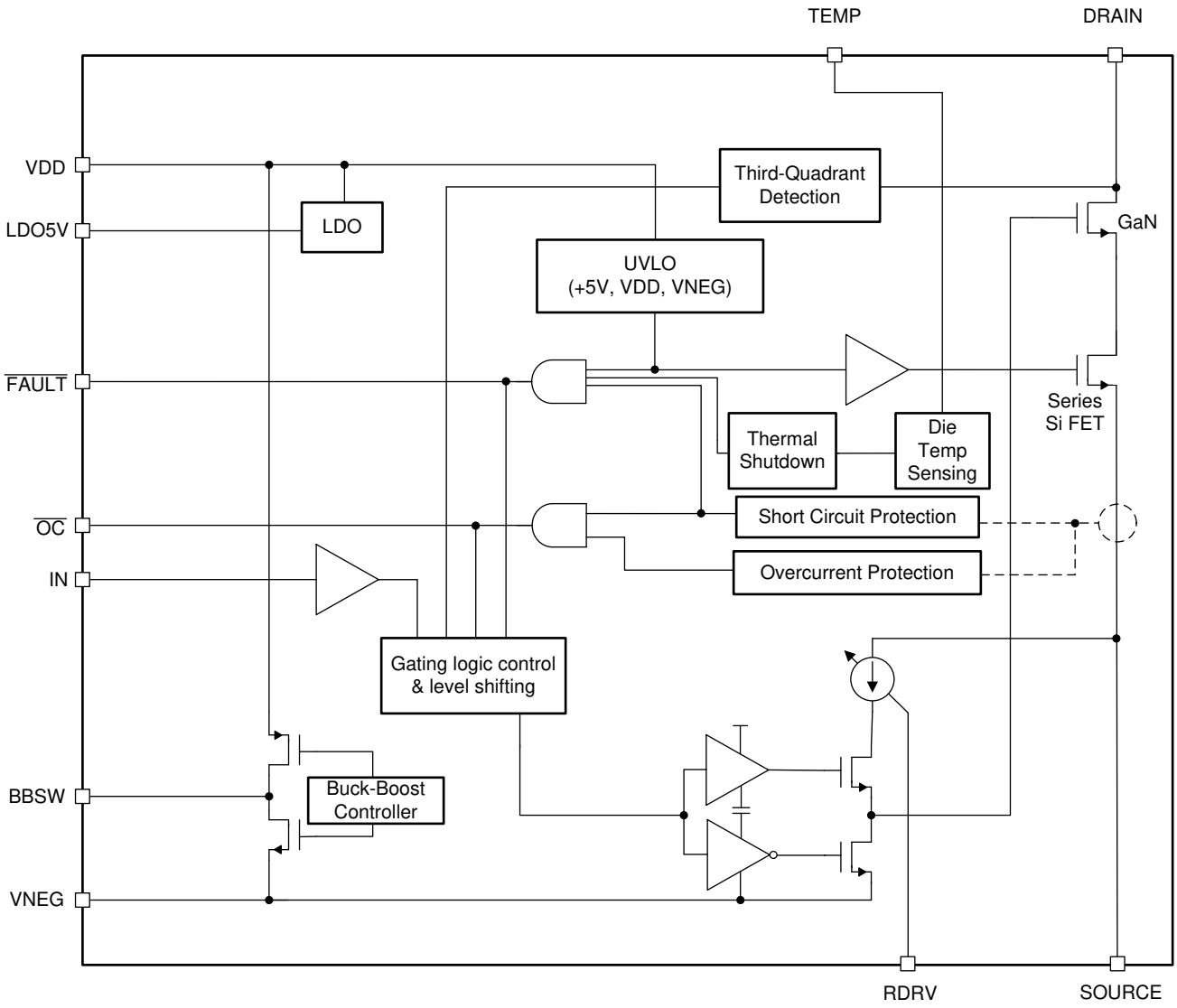

Copyright © 2022 Texas Instruments Incorporated

9.3 Feature Description

The LMG342xR050 includes advanced features to provide superior switching performance and converter efficiency.

9.3.1 GaN FET Operation Definitions

For the purposes of this data sheet, the following terms are defined below. The SOURCE pin is assumed to be at 0 V for these definitions.

First-Quadrant Current = Positive current flowing internally from the DRAIN pin to the SOURCE pin.

Third-Quadrant Current = Positive current flowing internally from the SOURCE pin to the DRAIN pin.

First-Quadrant Voltage = Drain pin voltage – Source pin voltage = Drain pin voltage

Third-Quadrant Voltage = SOURCE pin voltage – DRAIN pin voltage = – DRAIN pin voltage

FET On-State = FET channel is at rated $R_{DS(on)}$. Both first-quadrant current and third-quadrant current can flow at rated $R_{DS(on)}$.

For LMG342xR050 in **On-State**, GaN FET internal gate voltage is held at the SOURCE pin voltage to achieve rated $R_{DS(on)}$. The GaN FET channel is at rated $R_{DS(on)}$ with V_{GS} = 0 V because the LMG342xR050 GaN FET is a depletion mode FET.

FET Off-State = FET channel is fully off for positive first-quadrant voltage. No first-quadrant current can flow. While first-quadrant current cannot flow in the FET Off-State, third-quadrant current still flows if the DRAIN voltage is taken sufficiently negative (positive third-quadrant voltage). For devices with an intrinsic p-n junction body diode, current flow begins when the DRAIN voltage drops enough to forward bias the p-n junction.

GaN FETS do not have an intrinsic p-n junction body diode. Instead, current flows because the GaN FET channel turns back on. In this case, the DRAIN pin becomes the electrical source and the SOURCE pin becomes the electrical drain. To enhance the channel in third-quadrant, the DRAIN (electrical source) voltage must be taken sufficiently low to establish a V_{GS} voltage greater than the GaN FET threshold voltage. The GaN FET channel is operating in saturation and only turns on enough to support the third-quadrant current as its saturated current.

For LMG342xR050 in **Off-State**, GaN FET internal gate voltage is held at the VNEG pin voltage to block all first-quadrant current. The VNEG voltage is lower than the GaN FET negative threshold voltage to cut off the channel.

To enhance the channel in off-state third quadrant, the LMG342xR050 DRAIN (electrical source) voltage must be taken sufficiently close to VNEG to establish a V_{GS} voltage greater than the GaN FET threshold voltage. Again, because the LMG342xR050 GaN FET is a depletion mode FET with a negative threshold voltage, this means the GaN FET turns on with DRAIN (electrical source) voltage between 0 V and VNEG. The typical off-state third-quadrant voltage is 5.3 V for third-quadrant current at 15 A. Thus, the off-state third-quadrant losses for the LMG342xR050 are significantly higher than a comparable power device with an intrinsic p-n junction body diode. The ideal-diode mode function described in *Ideal-Diode Mode Operation* can help mitigate these losses in specific situations.

9.3.2 Direct-Drive GaN Architecture

The LMG342xR050 uses a series Si FET to ensure the power IC stays off when VDD bias power is not applied. When the VDD bias power is off, the series Si FET is interconnected with the GaN device in a cascode mode, which is shown in the *Functional Block Diagram*. The gate of the GaN device is held within a volt of the series Si FET's source. When a high voltage is applied on the module and the silicon FET blocks the drain voltage, the V_{GS} of the GaN device decreases until the GaN device passes the threshold voltage. Then, the GaN device is turned off and blocks the remaining major part of drain voltage. There is an internal clamp to make sure that the V_{DS} does not exceed its maximum rating. This feature avoids the avalanche of the series Si FET when there is no bias power.

When LMG342xR050 is powered up with VDD bias power, the internal buck-boost converter generates a negative voltage (V_{VNEG}) that is sufficient to directly turn off the GaN device. In this case, the series Si FET is held on and the GaN device is gated directly with the negative voltage.

Comparing with traditional cascode drive GaN architecture, where the GaN gate is grounded and the Si MOSFET gate is being driven to control the GaN device, direct-drive configuration has multiple advantages. First, as the Si MOSFET does need to switch in every switching cycle, GaN gate-to-source charge (Q_{GS}) is lower and there's no Si MOSFET reverse-recovery related losses. Second, the voltage distribution between the GaN and Si MOSFET in off-mode in a cascode configuration can cause the MOSFET to avalanche due to high GaN drain-to-source capacitance (C_{DS}). Finally, the switching slew rate in direct-drive configuration can be controlled while cascode drive cannot. More information about the direct-drive GaN architecture can be found in Direct-drive configuration for GaN devices.

9.3.3 Drain-Source Voltage Capability

Due to the silicon FET's long reign as the dominant power-switch technology, many designers are unaware that the headline drain-source voltage cannot be used as an equivalent point to compare devices across technologies. The headline drain-source voltage of a silicon FET is set by the avalanche breakdown voltage. The headline drain-source voltage of a GaN FET is set by the long term reliability with respect to data sheet specifications.

Exceeding the headline drain-source voltage of a silicon FET can lead to immediate and permanent damage. Meanwhile, the breakdown voltage of a GaN FET is much higher than the headline drain-source voltage. For example, the breakdown voltage of the LMG342xR050 is more than 800 V.

A silicon FET is usually the weakest link in a power application during an input voltage surge. Surge protection circuits must be carefully designed to ensure the silicon FET avalanche capability is not exceeded because it is not feasible to clamp the surge below the silicon FET breakdown voltage. Meanwhile, it is easy to clamp the surge voltage below a GaN FET breakdown voltage. In fact, a GaN FET can continue switching during the surge event which means output power is safe from interruption.

The LMG342xR050 drain-source capability is explained with the assistance of 图 9-1. The figure shows the drain-source voltage versus time for a GaN FET for a single switch cycle in a switching application. No claim is made about the switching frequency or duty cycle.

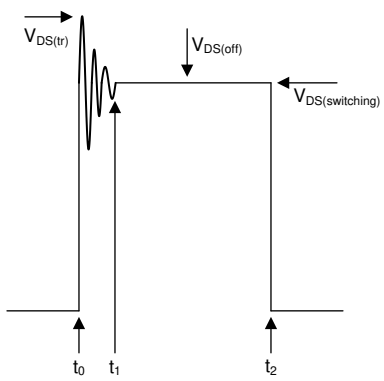

图 9-1. Drain-Source Voltage Switching Cycle

The waveform starts before t_0 with the FET in the on state. At t_0 the GaN FET turns off and parasitic elements cause the drain-source voltage to ring at a high frequency. The peak ring voltage is designated $V_{DS(tr)}$. The high frequency ringing has damped out by t_1. Between t_1 and t_2 the FET drain-source voltage is set by the characteristic response of the switching application. The characteristic is shown as a flat line, but other responses are possible. The voltage between t_1 and t_2 is designated $V_{DS(off)}$. At t_2 the GaN FET is turned on at a non-zero drain-source voltage. The drain-source voltage at t_2 is designated $V_{DS(switching)}$. Unique $V_{DS(tr)}$, $V_{DS(off)}$ and $V_{DS(switching)}$ parameters are shown because each can contribute to stress over the lifetime of the GaN FET.

Copyright © 2022 Texas Instruments Incorporated

The LMG342xR050 drain-source surge voltage capability is seen with the absolute maximum ratings $V_{DS(tr)(surge)}$ and $V_{DS(surge)}$ in the *Specifications* where $V_{DS(tr)(surge)}$ maps to $V_{DS(tr)}$ in 图 9-1 and $V_{DS(surge)}$ maps to both $V_{DS(off)}$ and $V_{DS(switching)}$ in 图 9-1. More information about the surge capability of TI GaN FETs is found in *A New Approach to Validate GaN FET Reliability to Power-line Surges Under Use-conditions.*

9.3.4 Internal Buck-Boost DC-DC Converter

An internal inverting buck-boost converter generates a regulated negative rail for the turn-off supply of the GaN device. The buck-boost converter is controlled by a peak current mode, hysteretic controller. In normal operation, the converter remains in discontinuous-conduction mode, but can enter continuous-conduction mode during start-up and overload the conditions. The converter is controlled internally and requires only a single surface-mount inductor and output bypass capacitor. Typically, the converter is designed to use a 4.7 μH inductor and a 2.2 μF output capacitor.

The buck-boost converter uses a peak current hysteretic control. As shown in 图 9-2, the inductor current increases at the beginning of a switching cycle until the inductor reaches the peak current limit. Then the inductor current goes down to zero. The idle time between each current pulse is determined automatically by the output current, and can be reduced to zero. Therefore, the maximum output current happens when the idle time is zero, and is decided by the peak current but to a first order is independent of the inductor value. However, the peak output current the buck-boost can deliver to the -14V rail is proportional to the VDD input voltage. Therefore, the maximum switching frequency of the GaN that the buck-boost can support varies with VDD voltage and is only specified for operation up to 3.6 MHz for VDD voltages above 9V.

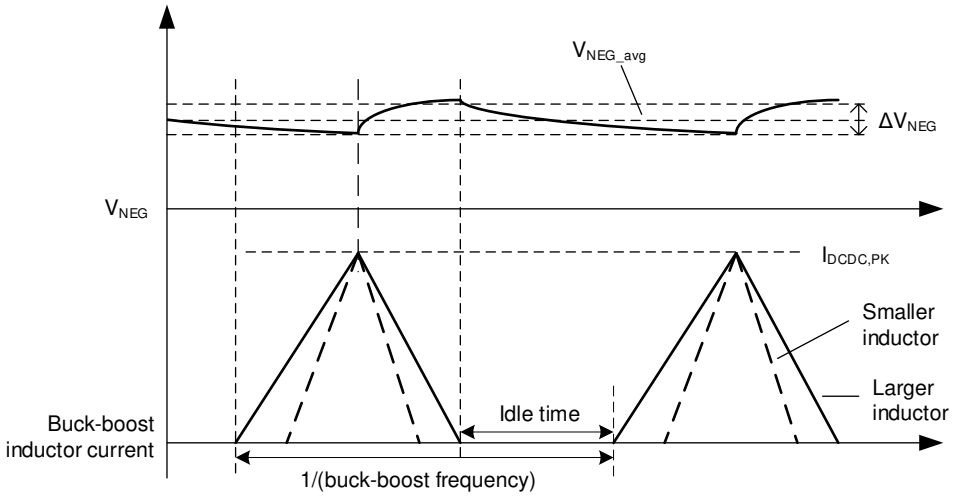

图 9-2. Buck-Boost Converter Inductor Current

The LMG342xR050 supports the GaN operation up to 3.6 MHz. As power consumption is very different in a wide switching frequency range enabled by the GaN device, two peak current limits are used to control the buck-boost converter. The two ranges are separated by IN positive-going threshold frequency. As shown in 图 9-3, when switching frequency is in the lower range, the peak current is initially set to the lower value $I_{BBSW,M(low)}$ (typically 0.4 A) . When switching frequency is in the higher range, the peak current is raised to the higher value $I_{BBSW,M(high)}$ (typically 1 A) and requires a larger inductor. There is a filter on this frequency detection logic, therefore the LMG342xR050 requires five consecutive cycles at the higher frequency before it is set to the higher buck-boost peak current limit. The current limit does not go down again until power off after the higher limit is set. Even if the switching frequency returns to the lower range, the current limit does not decrease to the lower limit.

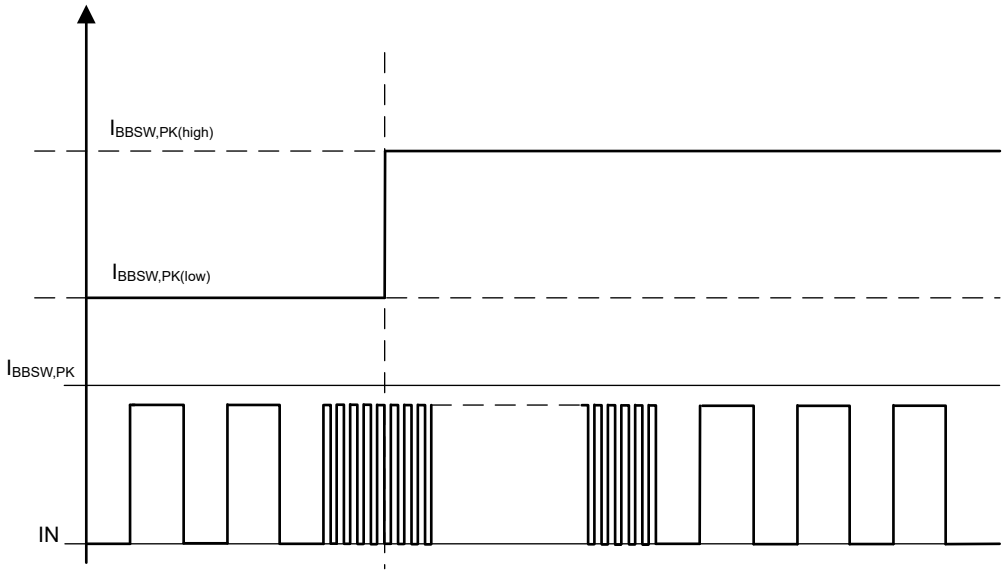

图 9-3. Buck-Boost Converter Peak Current

As the peak current of the buck-boost is subject to two different peak current limits which are 0.4 A and 1 A for low and high frequency operation (see *Internal Buck-Boost DC-DC Converter*), so the inductor must have a saturation current well above the rated peak current limit. After the higher limit is established by switching at a higher frequency, the current limit does not go back to the lower level even when GaN device is then switched at a lower frequency. Therefore, selecting an inductor according to the higher 1-A limit is recommended.

9.3.5 VDD Bias Supply

Wide VDD voltage ranges from 7.5 V to 18 V are supported by internal regulators which supply the bias supplies needed for the internal circuits to function. TI recommends to use a 12-V unregulated power supply to supply VDD.

9.3.6 Auxiliary LDO

There is a 5-V voltage regulator inside the part used to supply external loads, such as digital isolators for the high-side drive signal. The digital outputs of the part use this rail as their supply. No capacitor is required for stability, but transient response is poor if no external capacitor is provided. If the application uses this rail to supply external circuits, TI recommends to have a capacitor of at least 0.1 μF for improved transient response. A larger capacitor can be used for further transient response improvement. The decoupling capacitor used here must be a low-ESR ceramic type. Capacitances above 0.47 μF will slow down the start-up time of the LMG342xR050 due to the ramp-up time of the 5-V rail.

9.3.7 Fault Detection

The GaN power IC integrates overcurrent protection (OCP), short-circuit protection (SCP), overtemperature protection (OTP) and undervoltage lockout (UVLO).

9.3.7.1 Overcurrent Protection and Short-Circuit Protection

There are two types of current faults which can be detected by the driver: overcurrent fault and short-circuit fault.

The overcurrent protection (OCP) circuit monitors drain current and compares that current signal with an internally set limit $I_{T(OC)}$. Upon detection of the overcurrent, the LMG342xR050 conducts cycle-by-cycle overcurrent protection as shown in 图 9-4. In this mode, the GaN device is shut off and the OC pin is pulled low when the drain current crosses the $I_{T(OC)}$ plus a delay $t_{off(OC)}$, but the overcurrent signal clears after the IN pin signal goes low. In the next cycle, the GaN device can turn on as normal. The cycle-by-cycle function can be used in cases where steady-state operation current is below the OCP level but transient response can still reach current limit, while the circuit operation cannot be paused. The cycle-by-cycle function also prevents the GaN device from overheating by overcurrent induced conduction losses.

Copyright © 2022 Texas Instruments Incorporated

The short-circuit protection (SCP) monitors the drain current and triggers if the *di/dt* of the current exceeds a threshold *di/dt* $_{T(SC)}$ as the current crosses between the OC and SC thresholds. It performs this *di/dt* detection by delaying the OC detection signal by an amount $t_{OC,window}$ and using a higher current SC detection threshold. If the delayed OC occurs before the non-delayed SC, the *di/dt* is below the threshold and an OC is triggered. If the SC is detected first, the *di/dt* is fast enough and the SC is detected as shown in 图 9-5. This extremely high *di/dt* current would typically be caused by a short of the output of the half-bridge and can be damaging for the GaN to continue to operate in that condition. Therefore, if a short-circuit fault is detected, the GaN device is turned off with an intentionally slowed driver so that a lower overshoot voltage and ringing can be achieved during the turn-off event. This fast response circuit helps protect the GaN device even under a hard short-circuit condition. In this protection, the GaN device is shut off and held off until the fault is reset by either holding the IN pin low for a period of time defined in the *Specifications* or removing power from VDD.

During OCP or SCP in a half bridge, after the current reaches the upper limit and the device is turned off by protection, the PWM input of the device could still be high and the PWM input of the complementary device could still be low. In this case, the load current can flow through the third quadrant of the complementary device with no synchronous rectification. The high negative V_{DS} of the GaN device (– 3 V to – 5 V) from drain to source could lead to high third-quadrant loss, similar to dead-time loss but for a longer time.

For safety considerations, OCP allows cycle-by-cycle operation while SCP latches the device until reset. By reading the $\overline{FAULT}$ and $\overline{OC}$ pins, the exact current fault type can be determined. Refer to *Fault Reporting* for detailed information.

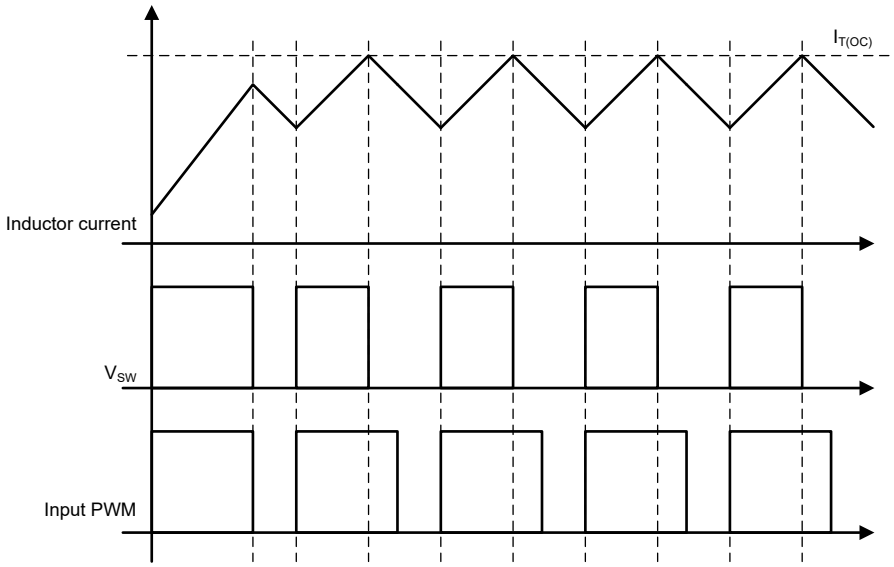

图 9-4. Cycle-by-Cycle OCP Operation

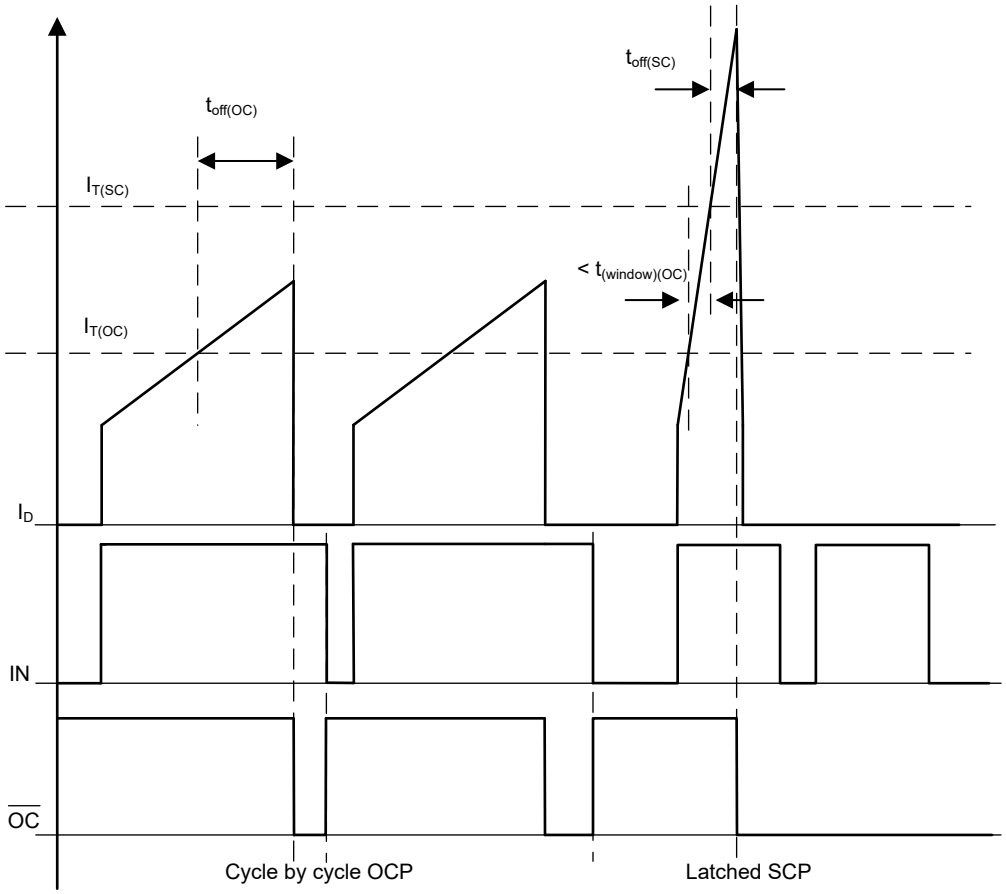

图 9-5. Overcurrent Detection vs Short-Circuit Detection

9.3.7.2 Overtemperature Shutdown

The LMG342xR050 implements two overtemperature-shutdown (OTSD) functions, the GaN OTSD and the Driver OTSD. Two OTSD functions are needed to maximize device protection by sensing different locations in the device and protecting against different thermal-fault scenarios.

The GaN OTSD senses the GaN FET temperature. The GaN FET can overheat from both first-quadrant current and third-quadrant current. As explained in *GaN FET Operation Definitions*, a FET can prevent first-quadrant current by going into the off-state but is unable to prevent third-quadrant current. FET third-quadrant losses are a function of the FET technology, current magnitude, and if the FET is operating in the on-state or off-state. As explained in *GaN FET Operation Definitions*, the LMG342xR050 has much higher GaN FET third-quadrant losses in the off-state.

When the GaN FET is too hot, the best protection is to turn off the GaN FET when first-quadrant current tries to flow and turn on the GaN FET when third-quadrant current is flowing. This type of FET control is known as ideal-diode mode (IDM). When the GaN OTSD trip point is exceeded, the GaN OTSD puts the GaN FET into overtemperature-shutdown ideal-diode mode (OTSD-IDM) operation to achieve this optimum protection. OTSD-IDM is explained in *Ideal-Diode Mode Operation*.

The Driver OTSD senses the integrated driver temperature and trips at a higher temperature compared to the GaN OTSD. This second OTSD function exists to protect the LMG342xR050 from driver thermal-fault events while allowing sufficient temperature difference for OTSD-IDM to operate. These driver thermal events include shorts on the LDO5V, BBSW, and VNEG device pins. When the Driver OTSD trip point is exceeded, the Driver OTSD shuts off the LDO5V regulator, the VNEG buck-boost converter, and the GaN FET. Note that OTSD-IDM does not function in Driver OTSD. This is why the Driver OTSD must trip higher than the GaN OTSD function. Otherwise, GaN FET third-quadrant overheating cannot be addressed.

Copyright © 2022 Texas Instruments Incorporated

Besides the temperature difference in the GaN OTSD and Driver OTSD trip points, further temperature separation is obtained due to the thermal gradient difference between the GaN OTSD and Driver OTSD sense points. The GaN OTSD sensor is typically at least 20°C hotter than the driver OTSD sensor when the device is in GaN OTSD due to GaN FET power dissipation.

The $\overline{\text{FAULT}}$ pin is asserted for either or both the GaN OTSD state and the Driver OTSD state. $\overline{\text{FAULT}}$ de-asserts and the device automatically returns to normal operation after both the GaN OTSD and Driver OTSD fall below their negative-going trip points. During cool down, when the device exits the Driver OTSD state but is still in the GaN OTSD state, the device automatically resumes OTSD-IDM operation.

9.3.7.3 UVLO Protection

The LMG342xR050 supports a wide range of VDD voltages. However, when the device is below UVLO threshold, the GaN device stops switching and is held off. The $\overline{\text{FAULT}}$ pin is pulled low as an indication of UVLO. The LDO and buck-boost are turned on by the rising-edge of the VIN UVLO and shuts off around 5 V to 6 V.

9.3.7.4 Fault Reporting

The $\overline{\text{FAULT}}$ and $\overline{\text{OC}}$ outputs form a fault reporting scheme together. The $\overline{\text{FAULT}}$ and $\overline{\text{OC}}$ outputs are both push-pull outputs indicating the readiness and fault status of the driver. These two pins are logic high in normal operation, and change logic according to 表 9-1.

表 9-1. Fault Types and Reporting

	NORMAL	UVLO, OT, and RDRV-OPEN	OVERCURRENT	SHORT-CIRCUIT
$\overline{\text{FAULT}}$	1	0	1	0
$\overline{\text{OC}}$	1	1	0	0

$\overline{\text{FAULT}}$ is held low when starting up until the series Si FET is turned on. During operation, if the power supplies go below the UVLO thresholds or the device temperature go above the OT thresholds, power device is disabled and $\overline{\text{FAULT}}$ is held low until a fault condition is no longer detected. If RDRV is open, $\overline{\text{FAULT}}$ is also held low. In a short-circuit or overtemperature fault condition, $\overline{\text{FAULT}}$ is held low until the fault latches are reset or fault is cleared. The $\overline{\text{OC}}$ pin is held low if there is a short-circuit or overcurrent fault. The signals help notify the controller the exact type of faults by reading the truth table. If a combined reporting of the faults on a single pin is desired, one can short the $\overline{\text{OC}}$ pin to ground during power up. All faults assert the $\overline{\text{FAULT}}$ pin then and the $\overline{\text{OC}}$ pin is not used. Please note: internal protection happens regardless of the connection of the pin outputs, which means that the protection features continue to operate even if fault reporting is ignored..

9.3.8 Drive Strength Adjustment

The LMG342xR050 allows users to adjust the drive strength of the device and obtain a desired slew rate, which provides flexibility when optimizing switching losses and noise coupling.

To adjust drive strength, a resistor can be placed between the RDRV pin and GND pin. The resistance determines the slew rate of the device, from 20 V/ns to 150 V/ns, during turn-on. On the other hand, there are two dv/dt values that can be selected without the resistor: shorting the RDRV pin to ground sets the slew rate to 150 V/ns, and shorting the RDRV pin to LDO5V sets the slew rate to 100 V/ns. The device detects the short to LDO5V one time at power up. Once the short to LDO5V condition is detected, the device no longer monitors the RDRV pin. Otherwise, the RDRV pin is continuously monitored and the dv/dt setting can be changed by modulating the resistance during device operation. The modulation must be fairly slow since there is significant internal filtering to reject switching noise.

Please note: parasitic power loop inductance can influence the voltage slew rate reading from the V_{DS} switching waveform.The inductance induces a drop on V_{DS} in the current rising phase before voltage falling phase, if this drop is more than 20% of the V_{DC}, the voltage slew rate reading can be influenced. Refer to 节 12.1.2 for the power loop design guideline and how to estimate the parasitic power loop inductance.

9.3.9 Temperature-Sensing Output

The integrated driver senses the GaN die temperature and outputs the information through a modulated PWM signal on the TEMP pin. The typical PWM frequency is 9 kHz with the same refresh rate. The minimum PWM

duty cycle is around 1%, which can be observed at temperature below 25°C. The target temperature range is from 25°C to 150°C, and the corresponding PWM duty cycle is typically from 3% to 82%. Following equation can be used to calculate the typical junction temperature $T_{J,typ}$ in °C from the duty cycle D_{TEMP}:

$$T_{J,typ}\ (°C) = 162.3 * D_{TEMP} + 20.1$$

The tolerances of typical measurement are listed in 表 9-2.

表 9-2. Typical Junction Temperature Measurement based on TEMP Signal and Tolerance

Typical T_J Measurement based on TEMP Signal (°C)	25	85	125
Tolerance (°C)	± 5	± 6	± 10

At temperatures above 150°C, the duty cycle continues to increase linearly until overtemperature fault happens. When overtemperature happens, the TEMP pin is pulled high to indicate this fault until the temperature is reduced to the normal range. There is a hysteresis to clear overtemperature fault.

9.3.10 Ideal-Diode Mode Operation

Off-state FETs act like diodes by blocking current in one direction (first quadrant) and allowing current in the other direction (third quadrant) with a corresponding *diode like* voltage drop. FETs, though, can also conduct third-quadrant current in the on-state at a significantly lower voltage drop. Ideal-diode mode (IDM) is when an FET is controlled to block first-quadrant current by going to the off-state and conduct third-quadrant current by going to the on-state, thus achieving an *ideal* lower voltage drop.

FET off-state third-quadrant current flow is commonly seen in power converters, both in normal and fault situations. As explained in *GaN FET Operation Definitions*, GaN FETs do not have an intrinsic p-n junction body diode to conduct off-state third-quadrant current. Instead, the off-state third-quadrant voltage drop for the LMG342xR050 is several times higher than a p-n junction voltage drop, which can impact efficiency in normal operation and device ruggedness in fault conditions.

To mitigate efficiency degradation, the LMG3425R050 implements an operational ideal-diode mode (OP-IDM) function. Meanwhile, to improve device ruggedness in a GaN FET overtemperature fault situation, all devices in the LMG342xR050 family implement a GaN FET overtemperature-shutdown ideal-diode mode (OTSD-IDM) function as referenced in *Overtemperature Shutdown*. Both OP-IDM and OTSD-IDM are described in more detail below.

Operational Ideal-Diode Mode (LMG3425R050)

Operational ideal-diode mode (OP-IDM) is implemented in the LMG3425R050 but not in the LMG3422R050. Understand that the OP-IDM function is not a general-purpose ideal-diode mode function which allows the LMG342xR050 to autonomously operate as a diode, including as an autonomous synchronous rectifier. Furthermore, the OP-IDM function is not intended to support an ideal-diode mode transition from the on-state to the off-state in a high-voltage, hard-switched application. Exposing the LMG342xR050 to this situation is akin to operating a half-bridge power stage with negative dead time with corresponding high shoot-through current.

Instead, as described below, the LMG342xR050 OP-IDM function is narrowly implemented to address a specific off-state third-quadrant current flow situation while minimizing situations where the ideal-diode mode can create a dangerous shoot-through current event.

OP-IDM is intended to minimize GaN FET off-state third-quadrant losses that occur in a zero-voltage switched (ZVS) event. ZVS events are seen in applications such as synchronous rectifiers and LLC converters. The ZVS event occurs at the FET off-state to on-state transition when an inductive element discharges the FET drain voltage before the FET is turned-on. The discharge ends with the inductive element pulling the FET drain-source voltage negative and the FET conducting off-state third-quadrant current.

Power supply controllers use dead-time control to set the time for the ZVS event to complete before turning on the FET. Both the ZVS time and resulting FET off-state third-quadrant current are a function of the power converter operation. Long ZVS time and low third-quadrant current occur when the inductive element is slewing the FET with low current and short ZVS time and high third-quadrant current occur when the inductive element is

Copyright © 2022 Texas Instruments Incorporated

slewing at the FET with high current. Sophisticated controllers optimally adjust the dead time to minimize third-quadrant losses. Simpler controllers use a fixed dead time to handle the longest possible ZVS time. Thus, in a fixed dead-time application, the highest possible off-state third-quadrant losses occur for the longest possible time.

OP-IDM mitigates the losses in a fixed dead-time application by automatically turning on the GaN FET as soon as third-quadrant current is detected. In this sense, OP-IDM can be described as providing a turn-on assist function with optimum dead-time control. Meanwhile, OP-IDM is not intended to be used to turn-off the GaN FET in normal operation. OP-IDM turnoff capability is only provided as a protection mechanism to guard against shoot-through current.

OP-IDM works within the confines of normal LMG342xR050 switching operation as controlled by the IN pin. The key consideration for the OP-IDM operation is to ensure the turn-on assist function is only activated on the ZVS edge. For example, third-quadrant current is seen in a LMG342xR050 used as a synchronous rectifier both before the IN pin goes high to turn on the GaN FET and after the IN pin goes low to turn off the GaN FET. OP-IDM turns on the GaN FET before the IN pin goes high when OP-IDM detects third-quadrant current. But it would be a mistake for OP-IDM to turn the GaN FET back on right after IN has turned it off because OP-IDM detects third-quadrant current. If OP-IDM were to turn on the GaN FET in this situation, it would create a shoot-through current event when the opposite-side power switch turns on. OP-IDM avoids this shoot-through current problem on the turn-off edge by requiring the drain voltage to first go positive before looking for the ZVS event.

The OP-IDM state machine is shown in 图 9-6. Each state is assigned a state number in the upper right side of the state box.

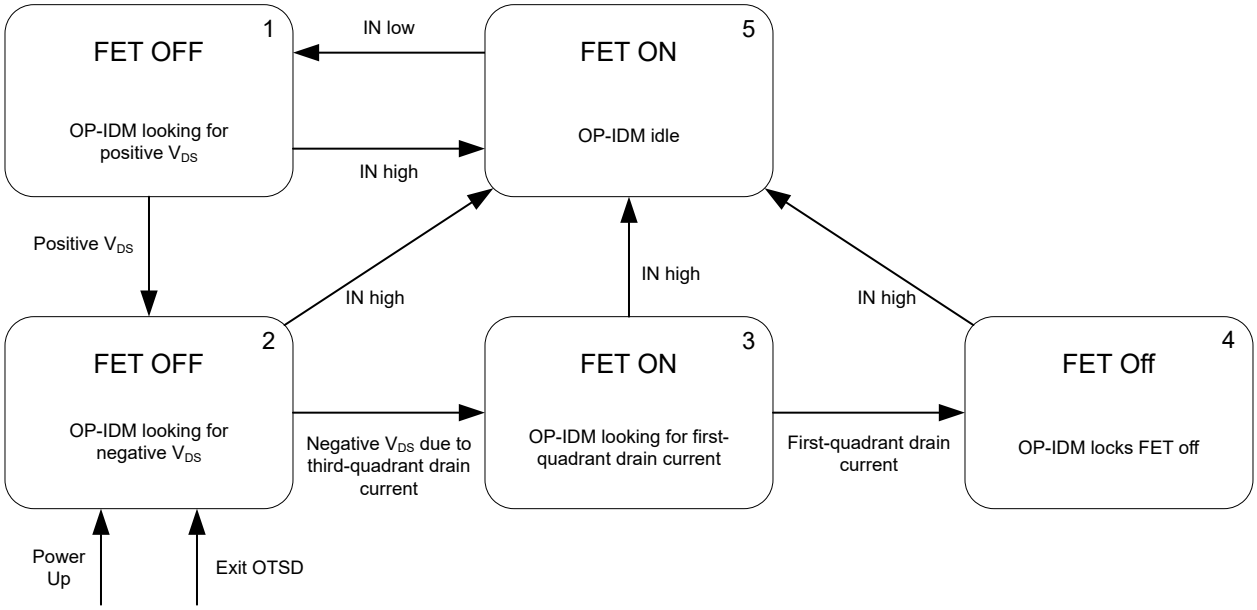

图 9-6. Operational Ideal-Diode Mode (OP-IDM) State Machine

1. A new OP-IDM cycle begins in OP-IDM state #1 after the IN pin goes low in OP-IDM state #5. OP-IDM turns off the GaN FET in OP-IDM state #1. OP-IDM monitors the GaN FET drain voltage, looking for a positive drain voltage to know it can now start looking for a ZVS event. After a positive GaN FET drain voltage is detected, the device moves to OP-IDM state #2.
2. OP-IDM keeps the GaN FET off in OP-IDM state #2. OP-IDM continues monitoring the GaN FET drain voltage. But this time it is looking for a negative drain voltage which means third-quadrant current is flowing after a ZVS event. This is also the starting state when the device powers up or exits OTSD. After a negative GaN FET drain voltage is detected, the device moves to OP-IDM state #3.
3. OP-IDM turns on the GaN FET in OP-IDM state #3. OP-IDM monitors the drain current in this state. Ideally, the device simply stays in this state until IN goes high. The drain current is monitored to protect against an

unexpected shoot-through current event. If first-quadrant drain current is detected, the device moves to OP-IDM state #4.

4. OP-IDM locks the GaN FET off in OP-IDM state #4. The GaN FET only turns back on when the IN pin goes high.
5. The device moves to OP-IDM state #5 from any other state when the IN pin goes high. The GaN FET is commanded on in OP-IDM state #5. OP-IDM is idle in this state. A new OP-IDM switching cycle begins when IN goes low moving the device into OP-IDM state #1.

OP-IDM can only turn on the GaN FET once per IN cycle. If an unexpected shoot-through current is detected between OP-IDM turning on the GaN FET and the IN pin going high, OP-IDM locks the GaN FET off for the remainder of the IN cycle.

Understand that the OP-IDM function turns on the GaN FET, after IN goes low, if it sees a positive drain voltage followed by a negative drain voltage. A design using the LMG3425R030 must be analyzed for any situations where this sequence of events creates a shoot-through current event. The analysis must include all power system corner cases including start-up, shutdown, no load, overload, and fault events. Note that discontinuous mode conduction (DCM) operation can easily create an OP-IDM shoot-through current event when the ringing at the end of a DCM cycle triggers OP-IDM to turn on the GaN FET.

Overtemperature-Shutdown Ideal-Diode Mode

Overtemperature-shutdown ideal-diode mode (OTSD-IDM) is implemented in all devices in the LMG342xR050 family. As explained in *Overtemperature Shutdown*, ideal-diode mode provides the best GaN FET protection when the GaN FET is overheating.

OTSD-IDM accounts for all, some, or none of the power system operating when OTSD-IDM is protecting the GaN FET. The power system may not have the capability to shut itself down, in response to the LMG342xR050 asserting the $\overline{\text{FAULT}}$ pin in a GaN OTSD event, and just continue to try to operate. Parts of the power system can stop operating due to any reason such as a controller software bug or a solder joint breaking or a device shutting off to protect itself. At the moment of power system shutdown, the power system stops providing gate drive signals but the inductive elements continue to force current flow while they discharge.

The OTSD-IDM state machine is shown in 图 9-7. Each state is assigned a state number in the upper right side of the state box. The OTSD-IDM state machine has a similar structure to the OP-IDM state machine. Similar states use the same state number.

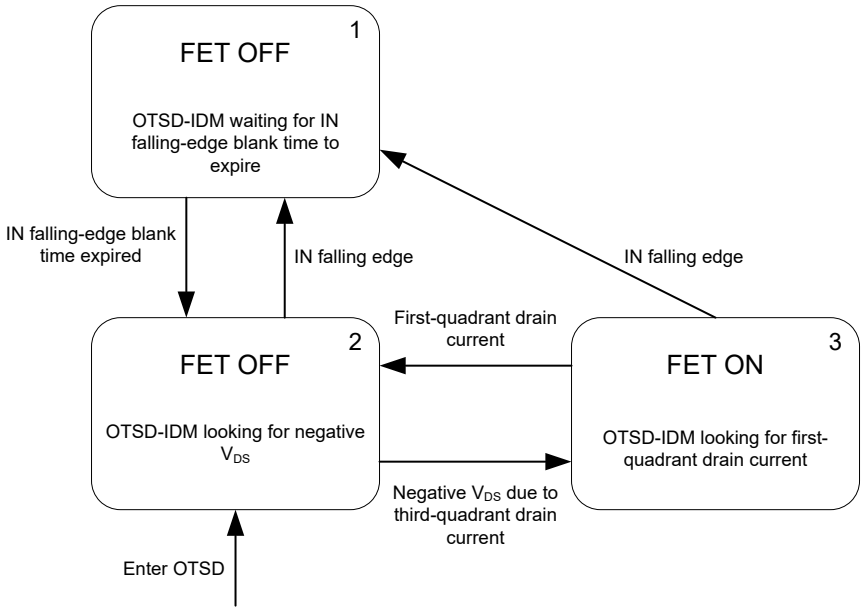

图 9-7. Overtemperature-Shutdown Ideal-Diode Mode (OTSD-IDM) State Machine

Copyright © 2022 Texas Instruments Incorporated

1. The LMG342xR050 GaN FET always goes to state #1 if a falling edge is detected on the IN pin. OTSD-IDM turns off the GaN FET in OTSD-IDM state #1. OTSD-IDM is waiting for the IN falling edge blank time to expire. This time gives the opposite-side FET time to switch to create a positive drain voltage. After the blank time expires, the device moves to OTSD-IDM state #2.
2. For OTSD-IDM state #2, OTSD-IDM keeps the GaN FET off if it is coming from OTSD-IDM state #1 and turns the GaN FET off if it is coming from OTSD-IDM state #3. OTSD-IDM is monitoring the GaN FET drain voltage in OP-IDM state #2. It is looking for a negative drain voltage which means third-quadrant current is flowing. This is also the starting state when the device enters OTSD. After a negative GaN FET drain voltage is detected, the device moves to OTSD-IDM state #3
3. OP-IDM turns on the GaN FET in OTSD-IDM state #3. OP-IDM monitors the drain current in this state. If first-quadrant drain current is detected, the device moves to OP-IDM state #2.

State #1 is used to protect against shoot-through current in a similar manner to OP-IDM state #1. The difference is that state #1 in the OTSD-IDM state machine simply waits for a fixed time period before proceeding to state #2. The fixed time period is to give the opposite-side switch time to switch and create a positive drain voltage. A fixed time is used to avoid a stuck condition for cases where a positive drain voltage is not created.

State #1 will help protect against shoot-through currents if the converter continues switching when the LMG342xR050 enters OTSD. Meanwhile, if the converter initiates switching with the LMG342xR050 already in OTSD, shoot-through current protection can be obtained by switching the OTSD device first to force it to progress though state #1. For example, the synchronous rectifier in a boost PFC can go into OTSD during initial input power application as the inrush current charges the PFC output cap. A shoot-through current event can be avoided if converter switching begins by switching the synchronous rectifier FET before switching the boost PFC FET.

If there is no IN signal, the state machine only moves between states #2 and #3 as a classic ideal-diode mode state machine. This allows all the inductive elements to discharge, when the power system shuts off, with minimum discharge stress created in the GaN FET.

Note that the OTSD-IDM state machine has no protection against repetitive shoot-through current events. There are degenerate cases, such as the LMG342xR050 losing its IN signal during converter operation, which can expose the OTSD-IDM to repetitive shoot-through current events. There is no good solution in this scenario. If OTSD-IDM did not allow repeated shoot-thru current events, the GaN FET would instead be exposed to excessive off-state third-quadrant losses.

9.4 Start Up Sequence

图 9-8 shows the start up sequence of LMG342xR050.

Time interval A: V_{DD} starts to build up. $\overline{FAULT}$ signal is initially pulled low.

Time interval B: After V_{DD} passes the UVLO threshold $V_{VDD,T+(UVLO)}$, both LDO5V and V_{NEG} start to built up. In a typical case where C_{LDO5V} = 100 nF and C_{VNEG} = 2.2 μF, LDO5V reaches its UVLO thresold earlier than V_{NEG}. The start-up time may vary if different capacitors are utilized. If V_{DD} has some glitches and falls below UVLO threshold $V_{VDD,T-(UVLO)}$ in this time interval, LDO5V and V_{NEG} will stop building up and only resume when V_{DD} goes above $V_{VDD,T+(UVLO)}$ again. A longer start-up time is expected in this case.

Time interval C: After LDO5V and V_{NEG} both reach their thresholds, the $\overline{FAULT}$ signal is cleared (pulled high) and the device is able to switch following the IN pin signal.

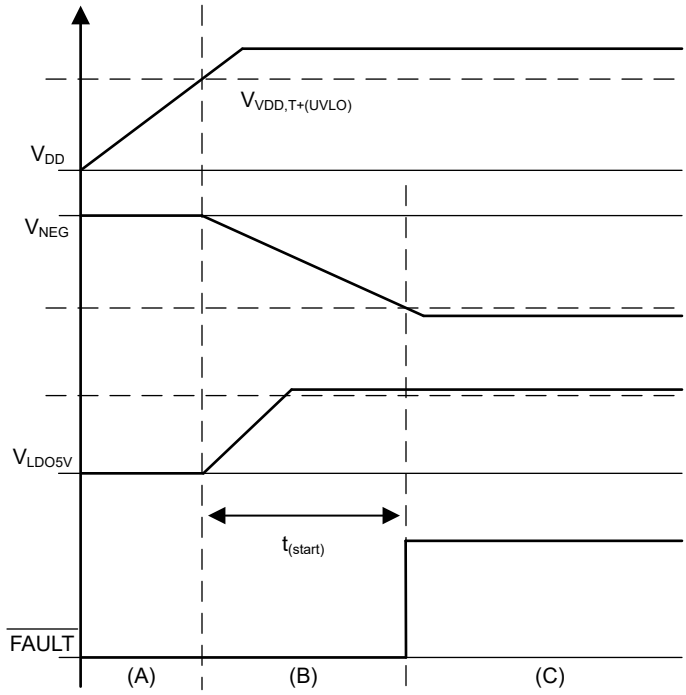

图 9-8. Start Up Timing Diagram

9.5 Safe Operation Area (SOA)

9.5.1 Safe Operation Area (SOA) - Repetitive SOA

The allowed repetitive SOA for the LMG342xR050 (图 7-12) is defined by the peak drain current (I_{DS}) and the drain to source voltage (V_{DS}) of the device during turn on. The peak drain current during switching is the sum of several currents going into drain terminal: the inductor current (I_{ind}); the current required to charge the C_{OSS} of the other GaN device in the totem pole; and the current required to charge the parasitic capacitance (C_{par}) on the switching node. 145 pF is used as an average C_{OSS} of the device during switching. The parasitic capacitance on the switch node may be estimated by using the overlap capacitance of the PCB. A boost topology is used for the SOA testing. The circuit shown in 图 9-9 is used to generate the SOA curve in 图 7-12. For reliable operation, the junction temperature of the device must also be limited to 125 °C. The I_{DS} of 图 7-12 can be calculated by:

$$I_{DS} = I_{ind} + (145\ pF + C_{par}) * \text{Drain slew rate at peak current}$$

where drain slew rate at the peak current is estimated between 70 percent and 30 percent of the bus voltage, and C_{par} is the parasitic board capacitance at the switched node.

Copyright © 2022 Texas Instruments Incorporated

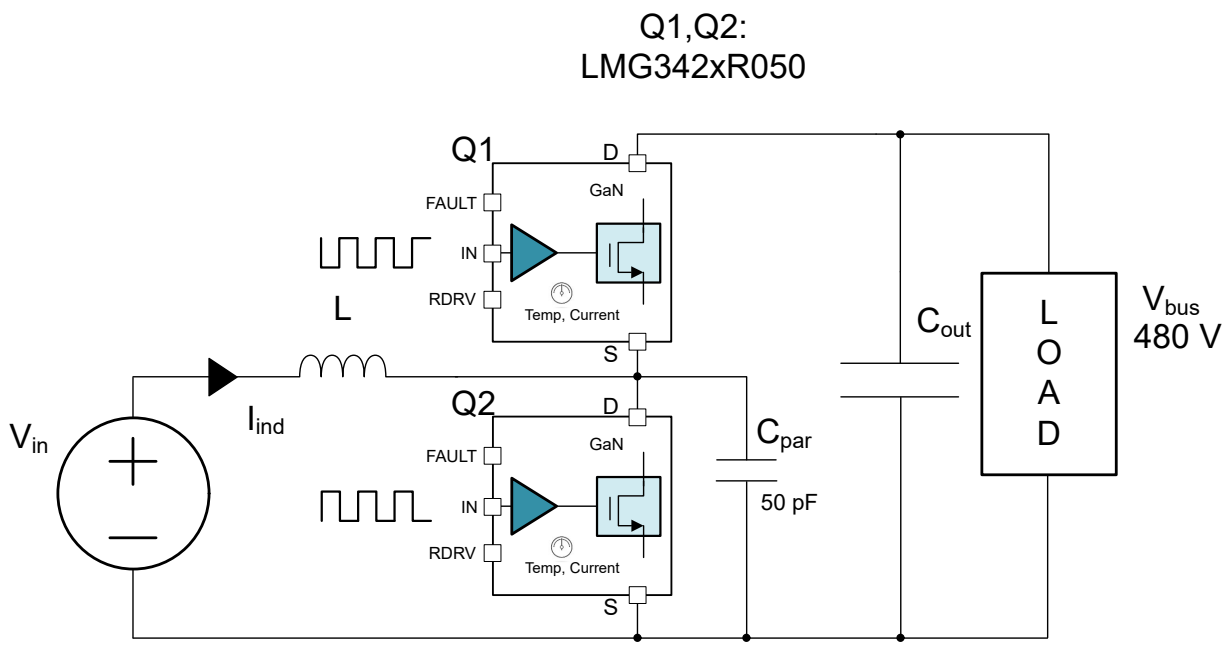

图 9-9. Circuit Used for SOA Curve

9.6 Device Functional Modes

The device has one mode of operation that applies when operated within the Recommended Operating Conditions.

10 Application and Implementation

备注

以下应用部分中的信息不属于 TI 器件规格的范围，TI 不担保其准确性和完整性。TI 的客 户应负责确定器件是否适用于其应用。客户应验证并测试其设计，以确保系统功能。

10.1 Application Information

The LMG342xR050 is a power IC targeting hard-switching and soft-switching applications operating up to 480-V bus voltages. GaN devices offer zero reverse-recovery charge enabling high-frequency, hard-switching in applications like the totem-pole PFC. Low Q_{oss} of GaN devices also benefits soft-switching converters, such as the LLC and phase-shifted full-bridge configurations. As half-bridge configurations are the foundation of the two mentioned applications and many others, this section describes how to use the LMG342xR050 in a half-bridge configuration.

Copyright © 2022 Texas Instruments Incorporated

10.2 Typical Application

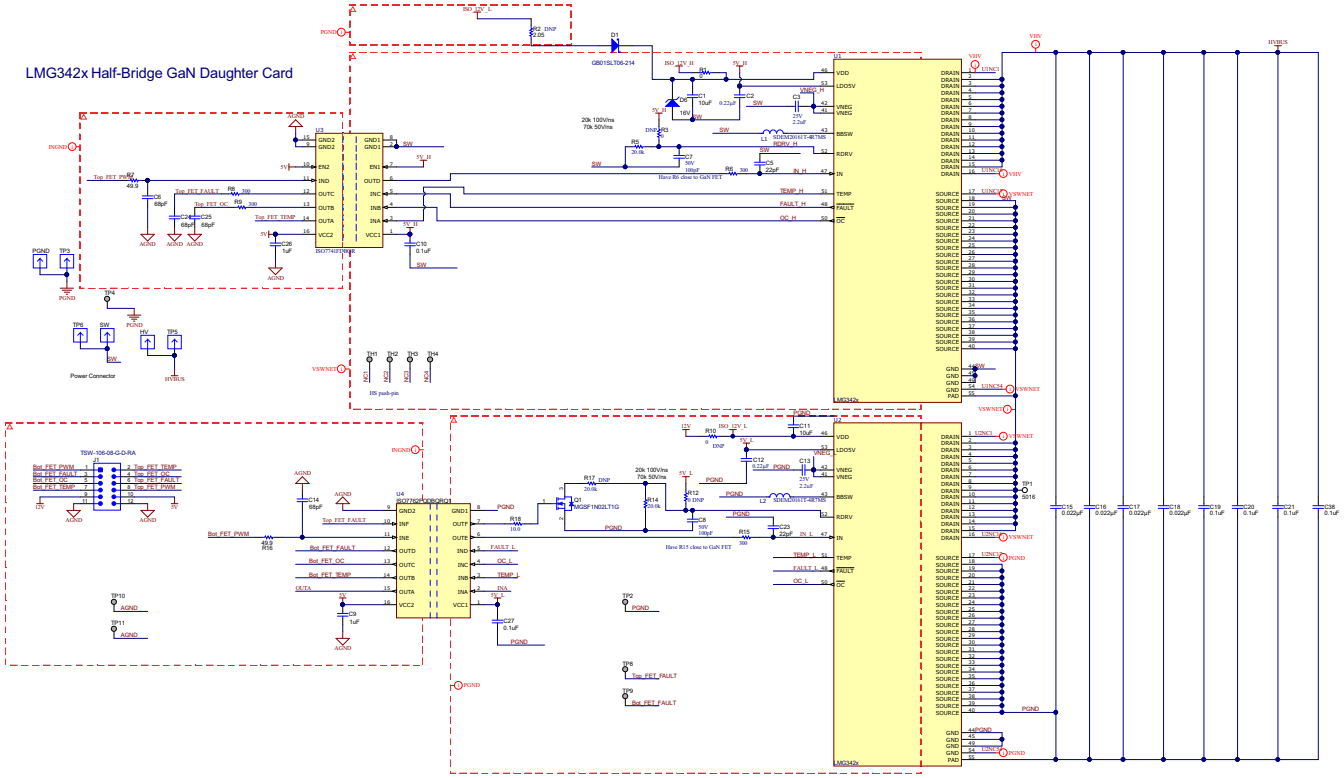

图 10-1. Typical Half-Bridge Application

10.2.1 Design Requirements

This design example is for a hard-switched boost converter which is representative of PFC applications. 表 10-1 shows the system parameters for this design.

表 10-1. Design Parameters

DESIGN PARAMETER	EXAMPLE VALUE
Input voltage	200 VDC
Output voltage	400 VDC
Input (inductor) current	20 A
Switching frequency	100 kHz

10.2.2 Detailed Design Procedure

In high-voltage power converters, circuit design and PCB layout are essential for high-performance power converters. As designing a power converter is out of the scope of this document, this data sheet describes how to build well-behaved half-bridge configurations with the LMG342xR050.

10.2.2.1 Slew Rate Selection

The slew rate of LMG342xR050 can be adjusted between approximately 20 V/ns and 150 V/ns by connecting a resistor, R_{RDRV}, from the RDRV pin to GND. The RDRV pin is a high-impedance node if a large R_{RDRV} resistor is used. Therefore it can be susceptible to coupling from the drain or other fast-slewing high-voltage nodes if it isn’t well-shielded. This will manifest itself as an unstable switching *dv/dt* and in extreme cases transient faults due to the RDRV being detected as open. Shielding the pin in the layout should be a priority, however if this coupling is still a problem, a cap of up to 1nF from RDRV to GND can be added to stabilize the pin voltage.

The slew rate affects GaN device performance in terms of:

- Switching loss
- Voltage overshoot
- Noise coupling
- EMI emission

Generally, high slew rates provide low switching loss, but high slew rates can also create higher voltage overshoot, noise coupling, and EMI emissions. Following the design recommendations in this data sheet helps mitigate the challenges caused by a high slew rate. The LMG342xR050 offers circuit designers the flexibility to select the proper slew rate for the best performance of their applications.

10.2.2.1.1 Start-Up and Slew Rate With Bootstrap High-Side Supply

Using a bootstrap supply introduces additional constraints on the start-up of the high-side LMG342xR050. Prior to powering up, the GaN device operates in cascode mode with reduced performance. In some circuits, a proper slew rate can be required for the start-up of a bootstrap-supplied half-bridge configuration.

10.2.2.2 Signal Level-Shifting

In half-bridges, high-voltage level shifters or digital isolators must be used to provide isolation for signal paths between the high-side device and control circuit. Using an isolator is optional for the low-side device. However, using and isolator equalizes the propagation delays between the high-side and low-side signal paths, and provides the ability to use different grounds for the GaN device and the controller. If an isolator is not used on the low-side device, the control ground and the power ground must be connected at the device and nowhere else on the board. For more information, see *Layout Guidelines*. With fast-switching devices, common ground inductance can easily cause noise issues without the use of an isolator.

Choosing a digital isolator for level-shifting is important for improvement of noise immunity. As GaN device can easily create high dv/dt, > 50 V/ns, in hard-switching applications, TI highly recommends to use isolators with high common-mode transient immunity (CMTI) and low barrier capacitance. Isolators with low CMTI can easily generate false signals, which could cause shoot-through. The barrier capacitance is part of the isolation

Copyright © 2022 Texas Instruments Incorporated

capacitance between the signal ground and power ground, which is in direct proportion to the common mode current and EMI emission generated during the switching. Additionally, TI strongly encourages to select isolators which are not edge-triggered. In an edge-triggered isolator, a high dv/dt event can cause the isolator to flip states and cause circuit malfunction.

Generally, ON/OFF keyed isolators with default output low are preferred, such as the TI ISO77xxF series. Default low state ensures the system will not shoot-through when starting up or recovering from fault events. As a high CMTI event would only cause a very short (a few nanoseconds) false pulse, TI recommends a low pass filter, like 300 Ω and 22 pF R-C filter, to be placed at the driver input to filter out these false pulses.

10.2.2.3 Buck-Boost Converter Design

图 10-2 and 图 10-3 show the buck-boost converter efficiency versus load current with different inductors and peak current modes. A minimum inductance value of 3 µH is preferred for the buck-boost converter so that the di/dt across the inductor is not too high. This leaves enough margin for the control loop to respond. As a result, the maximum di/dt of the inductor is limited to 6 A/µs. On the other hand, large inductance also limits the transient response for stable output voltage, and it is preferred to have inductors less than 10 µH.

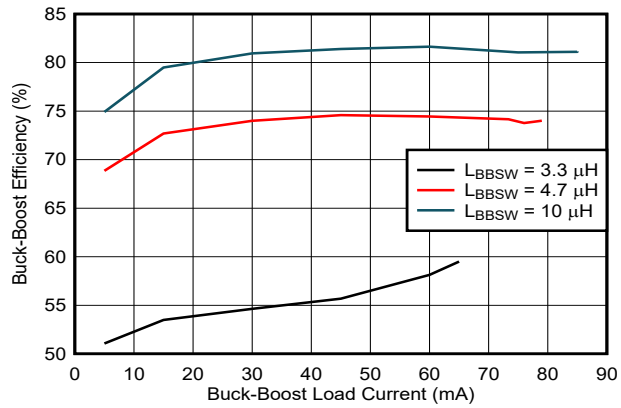

VDD = 12 V; T_J = 25 °C.

图 10-2. Buck-Boost Efficiency vs Load when $I_{BBSW,PK} = I_{BBSW,PK(low)}$

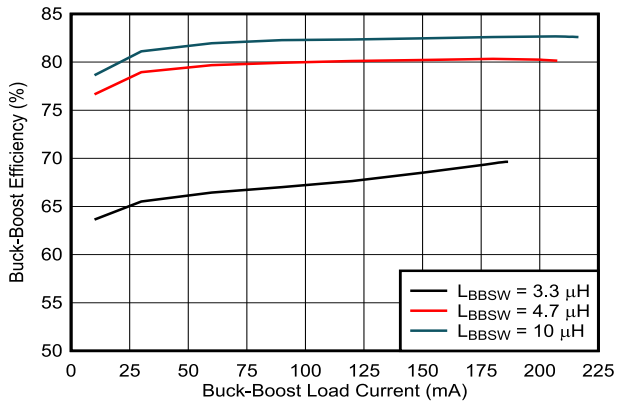

VDD = 12 V; T_J = 25 °C.

图 10-3. Buck-Boost Efficiency vs Load when $I_{BBSW,PK} = I_{BBSW,PK(high)}$

10.2.3 Application Curves

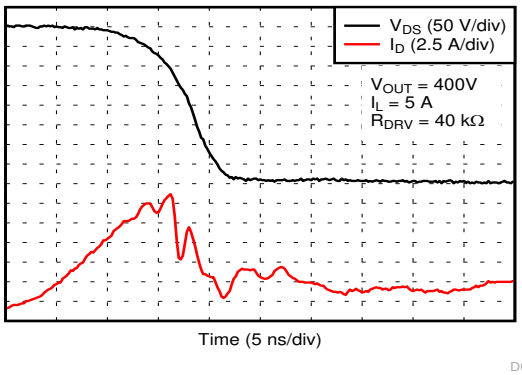

图 10-4. Turn-On Waveform in Application Example

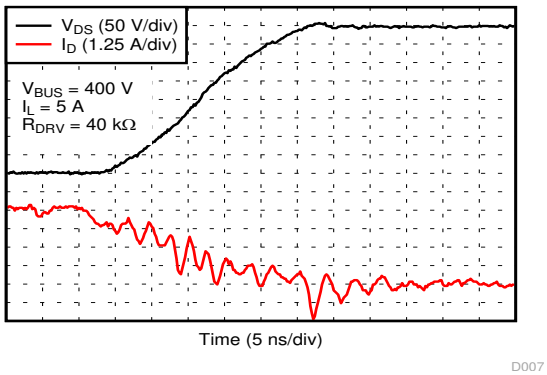

图 10-5. Turn-Off Waveform in Application Example

10.3 Do's and Don'ts

The successful use of GaN devices in general, and LMG342xR050 in particular, depends on proper use of the device. When using the LMG342xR050, *DO*:

- Read and fully understand the data sheet, including the application notes and layout recommendations.
- Use a four-layer board and place the return power path on an inner layer to minimize power-loop inductance.
- Use small, surface-mount bypass and bus capacitors to minimize parasitic inductance.
- Use the proper size decoupling capacitors and locate them close to the IC as described in *Layout Guidelines*.
- Use a signal isolator to supply the input signal for the low-side device. If not, ensure the signal source is connected to the signal GND plane which is tied to the power source *only* at the LMG342xR050 IC.
- Use the $\overline{\text{FAULT}}$ pin to determine power-up state and to detect overcurrent and overtemperature events and safely shut off the converter.

To avoid issues in your system when using the LMG342xR050, *DON'T*:

- Use a single-layer or two-layer PCB for the LMG342xR050 as the power-loop and bypass capacitor inductances is excessive and prevent proper operation of the IC.
- Reduce the bypass capacitor values below the recommended values.
- Allow the device to experience drain transients above 600 V as they can damage the device.
- Allow significant third-quadrant conduction when the device is OFF or unpowered, which can cause overheating. Self-protection features cannot protect the device in this mode of operation.
- Ignore the $\overline{\text{FAULT}}$ pin output.

Copyright © 2022 Texas Instruments Incorporated

11 Power Supply Recommendations

The LMG342xR050 only requires an unregulated VDD power supply from 7.5 V to 18 V. The low-side supply can be obtained from the local controller supply. The supply of the high-side device must come from an isolated supply or a bootstrap supply.

11.1 Using an Isolated Power Supply

Using an isolated power supply to power the high-side device has the advantage that it works regardless of continued power-stage switching or duty cycle. Using an isolated power supply can also power the high-side device before power-stage switching begins, eliminating the power-loss concern of switching with an unpowered LMG342xR050 (see *Start-Up and Slew Rate With Bootstrap High-Side Supply* for details). Finally, a properly-selected isolated supply introduces less parasitics and reduces noise coupling.

The isolated supply can be obtained with a push-pull converter, a flyback converter, a FlyBuck™ converter, or an isolated power module. When using an unregulated supply, the input of LMG342xR050 must not exceed the maximum supply voltage. A 16-V TVS diode can be used to clamp the VDD voltage of LMG342xR050 for additional protection. Minimizing the inter-winding capacitance of the isolated power supply or transformer is necessary to reduce switching loss in hard-switched applications. Furthermore, capacitance across the isolated bias supply inject high currents into the signal-ground of the LMG342xR050 and can cause problematic ground-bounce transients. A common-mode choke can alleviate most of these issues.

11.2 Using a Bootstrap Diode

In half-bridge configuration, a floating supply is necessary for the high-side device. To obtain the best performance of LMG342xR050, Ti highly recommends *Using an Isolated Power Supply*. A bootstrap supply can be used with the recommendations of this section.

In applications like a boost converter, the low side LMG342xR050 always start switching while high side LMG342xR050 is unpowered. If the low side is adjusted to achieve very high slew rate before the high side bias is fully settled, there can be unintentional turn-on at the high side due to parasitic coupling at high slew rate. The start-up slew rate must be slowed down to 20 V/ns by changing the resistance of RDRV pin of the low side. This slow down can be achieved by controlling the low side RDRV resistance with the high side $\overline{\text{FAULT}}$ as given in 图 10-1.

11.2.1 Diode Selection

The LMG342xR050 offers no reverse-recovery charge and very limited output charge. Hard-switching circuits using the LMG342xR050 also exhibit high voltage slew rates. A compatible bootstrap diode must not introduce high output charge and reverse-recovery charge.

A silicon carbide diode, like the GB01SLT06-214, can be used to avoid reverse-recovery effects. The SiC diode has an output charge of 3 nC. Althought there is additional loss from its output charge, it does not dominate the losses of the switching stage.

11.2.2 Managing the Bootstrap Voltage

In a synchronous buck or other converter where the low-side switch occasionally operates in third-quadrant, the bootstrap supply charges through a path that includes the third-quadrant voltage drop of the low-side LMG342xR050 during the dead time as shown in 图 11-1. This third-quadrant drop can be large, which can over-charge the bootstrap supply in certain conditions. The V_{DD} supply of LMG342xR050 must be kept below 18 V.

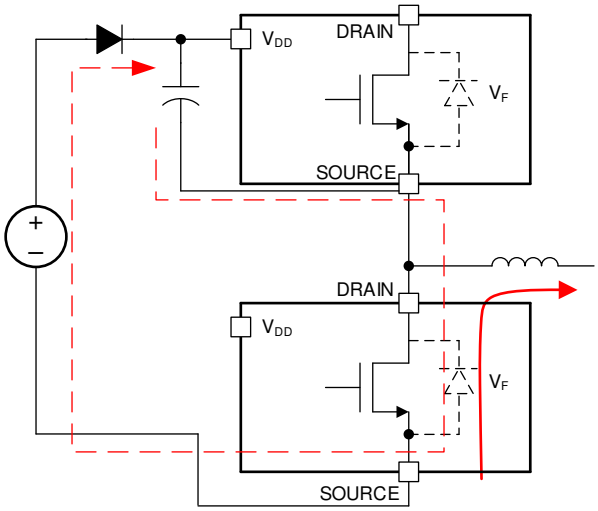

图 11-1. Charging Path for Bootstrap Diode

As shown in 图 11-2, the recommended bootstrap supply includes a bootstrap diode, a series resistor, and a 16-V TVS or zener diode in parallel with the V_{DD} bypass capacitor to prevent damaging the high-side LMG342xR050. The series resistor limits the charging current at start-up and when the low-side device is operating in third-quadrant mode. This resistor must be selected to allow sufficient current to power the LMG342xR050 at the desired operating frequency. At 100-kHz operation, TI recommends a value of approximately 2 Ω . At higher frequencies, this resistor value must be reduced or the resistor omitted entirely to ensure sufficient supply current.

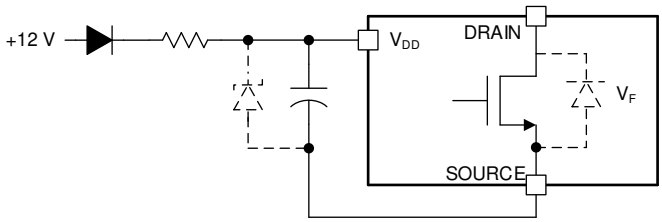

图 11-2. Suggested Bootstrap Regulation Circuit

Copyright © 2022 Texas Instruments Incorporated

12 Layout

12.1 Layout Guidelines

The layout of the LMG342xR050 is critical to its performance and functionality. Because the half-bridge configuration is typically used with these GaN devices, layout recommendations are considered with this configuration. A four-layer or higher layer count board is required to reduce the parasitic inductances of the layout to achieve suitable performance.

12.1.1 Solder-Joint Reliability

Large QFN packages can experience high solder-joint stress. TI recommends several best practices to ensure solder-joint reliability. First, the instructions for the NC1 and NC2 anchor pins found in 表 6-1 must be followed. Second, all the LMG342xR050 board solder pads must be non-solder-mask defined (NSMD) as shown in the land pattern example in *Mechanical, Packaging, and Orderable Information*. Finally, any board trace connected to an NSMD pad must be less than 2/3 the width of the pad on the pad side where it is connected. The trace must maintain this 2/3 width limit for as long as it is not covered by solder mask. After the trace is under solder mask, there are no limits on the trace dimensions. All these recommendations are followed in the *Layout Example*.

12.1.2 Power-Loop Inductance

The power loop, comprising the two devices in the half bridge and the high-voltage bus capacitance, undergoes high *di/dt* during switching events. By minimizing the inductance of this loop, ringing and electro-magnetic interference (EMI) can be reduced, as well as reducing voltage stress on the devices.

Place the power devices as close as possible to minimize the power-loop inductance. The decoupling capacitors are positioned in line with the two devices. They can be placed close to either device. In *Layout Examples*, the decoupling capacitors are placed on the same layer as the devices. The return path (PGND in this case) is located on second layer in close proximity to the top layer. By using inner layer and not bottom layer, the vertical dimension of the loop is reduced, thus minimizing inductance. A large number of vias near both the device terminal and bus capacitance carries the high-frequency switching current to inner layer while minimizing impedance.

The power loop inductance can be estimated based on the ringing frequency f_{ring} of the drain-source voltage switching waveform based on the following equation

$$L_{pl} = \frac{1}{4\pi^2 f_{ring}^2 C_{ring}} \tag{1}$$

where C_{ring} is equal to C_{OSS} at the bus voltage (refer to 图 7-8 for the typical value) plus the drain-source parasitic capacitance from the board and load inductor or transformer.

As the parasitic capacitance of load components is hard to character, it's recommended to capture the V_{DS} switching waveform without load components to estimate the power loop inductance. Typically, the power loop inductance of the *Layout Example* is around 2.5 nH.

12.1.3 Signal-Ground Connection

The LMG342xR050's SOURCE pin is internally connected to GND pins of the power IC, the signal-ground reference. Local signal-ground planes must be connected to GND pins with low impedance star connection. In addition, the return path for the passives associated to the driver (for example, bypass capacitance) must be connected to the GND pins. In *Layout Example*, local signal-ground planes are located on second layer to act as the return path for the local circuitry. The local signal-ground planes are not connected to the high-current SOURCE pins except the star connection at GND pins.

12.1.4 Bypass Capacitors

The gate drive loop impedance must be minimized to obtain good performance. Although the gate driver is integrated on package, the bypass capacitance for the driver is placed externally. As the GaN device is turned

off to a negative voltage, the impedance of the path to the external VNEG capacitor is included in the gate drive loop. The VNEG capacitor must be placed close to VNEG and GND pins.

The VDD pin bypass capacitors, C1 and C11, must also be placed close to the VDD pin with low impedance connections.

12.1.5 Switch-Node Capacitance

GaN devices have very low output capacitance and switch quickly with a high *dv/dt*, yielding very low switching losses. To preserve this low switching losses, additional capacitance added to the output node must be minimized. The PCB capacitance at the switch node can be minimized by following these guidelines:

- Minimize overlap between the switch-node plane and other power and ground planes.
- Make the GND return path under the high-side device thinner while still maintaining a low-inductance path.
- Choose high-side isolator ICs and bootstrap diodes with low capacitance.
- Place the power inductor as close to the GaN device as possible.
- Power inductors must be constructed with a single-layer winding to minimize intra-winding capacitance.
- If a single-layer inductor is not possible, consider placing a small inductor between the primary inductor and the GaN device to effectively shield the GaN device from the additional capacitance.
- If a back-side heat-sink is used, use the least amount of area of the switch-node copper coverage on the bottom copper layer to improve the thermal dissipation.

12.1.6 Signal Integrity

The control signals to the LMG342xR050 must be protected from the high *dv/dt* caused by fast switching. Coupling between the control signals and the drain can cause circuit instability and potential destruction. Route the control signals (IN, $\overline{\text{FAULT}}$ and $\overline{\text{OC}}$) over a ground plane placed on an adjacent layer. In *Layout Example*, for example, all the signals are routed on layers close to the local signal ground plane.

Capacitive coupling between the traces for the high-side device and the static planes, such as PGND and HVBUS, could cause common mode current and ground bounce. The coupling can be mitigated by reducing overlap between the high-side traces and the static planes. For the high-side level shifter, ensure no copper from either the input or output side extends beneath the isolator or the CMTI of the device can be compromised.

12.1.7 High-Voltage Spacing

Circuits using the LMG342xR050 involve high voltage, potentially up to 600 V. When laying out circuits using the LMG342xR050, understand the creepage and clearance requirements for the application and how they apply to the GaN device. Functional (or working) isolation is required between the source and drain of each transistor, and between the high-voltage power supply and ground. Functional isolation or perhaps stronger isolation (such as reinforced isolation) can be required between the input circuitry to the LMG342xR050 and the power controller. Choose signal isolators and PCB spacing (creepage and clearance) distances which meet your isolation requirements.

If a heat sink is used to manage thermal dissipation of the LMG342xR050, ensure necessary electrical isolation and mechanical spacing is maintained between the heat sink and the PCB.

12.1.8 Thermal Recommendations

The LMG342xR050 is a lateral device grown on a Si substrate. The thermal pad is connected to the source of device. The LMG342xR050 can be used in applications with significant power dissipation, for example, hard-switched power converters. In these converters, cooling using just the PCB can not be sufficient to keep the part at a reasonable temperature. To improve the thermal dissipation of the part, TI recommends a heat sink is connected to the back of the PCB to extract additional heat. Using power planes and numerous thermal vias, the heat dissipated in the LMG342xR050 can be spread out in the PCB and effectively passed to the other side of the PCB. A heat sink can be applied to bare areas on the back of the PCB using an thermal interface material (TIM). The solder mask from the back of the board underneath the heat sink can be removed for more effective heat removal.

Refer to the *High Voltage Half Bridge Design Guide for LMG3410 Smart GaN FET* application note for more recommendations and performance data on thermal layouts.

Copyright © 2022 Texas Instruments Incorporated

12.2 Layout Examples

Correct layout of the LMG342xR050 and its surrounding components is essential for correct operation. The layouts shown here reflect the GaN device schematic in 图 10-1. These layouts are shown to produce good results and is intended as a guideline. However, it can be possible to obtain acceptable performance with alternate layout schemes. Additionally, please refer to the land pattern example in *Mechanical, Packaging, and Orderable Information* for the latest recommended PCB footprint of the device.

The the top-layer layout and mid-layer layout are shown. The layouts are zoomed in to the LMG342xR050 U1 and U2 component placements. The mid-layer layout includes the outlines of the top level components to assist the reader in lining up the top-layer and mid-layer layouts.

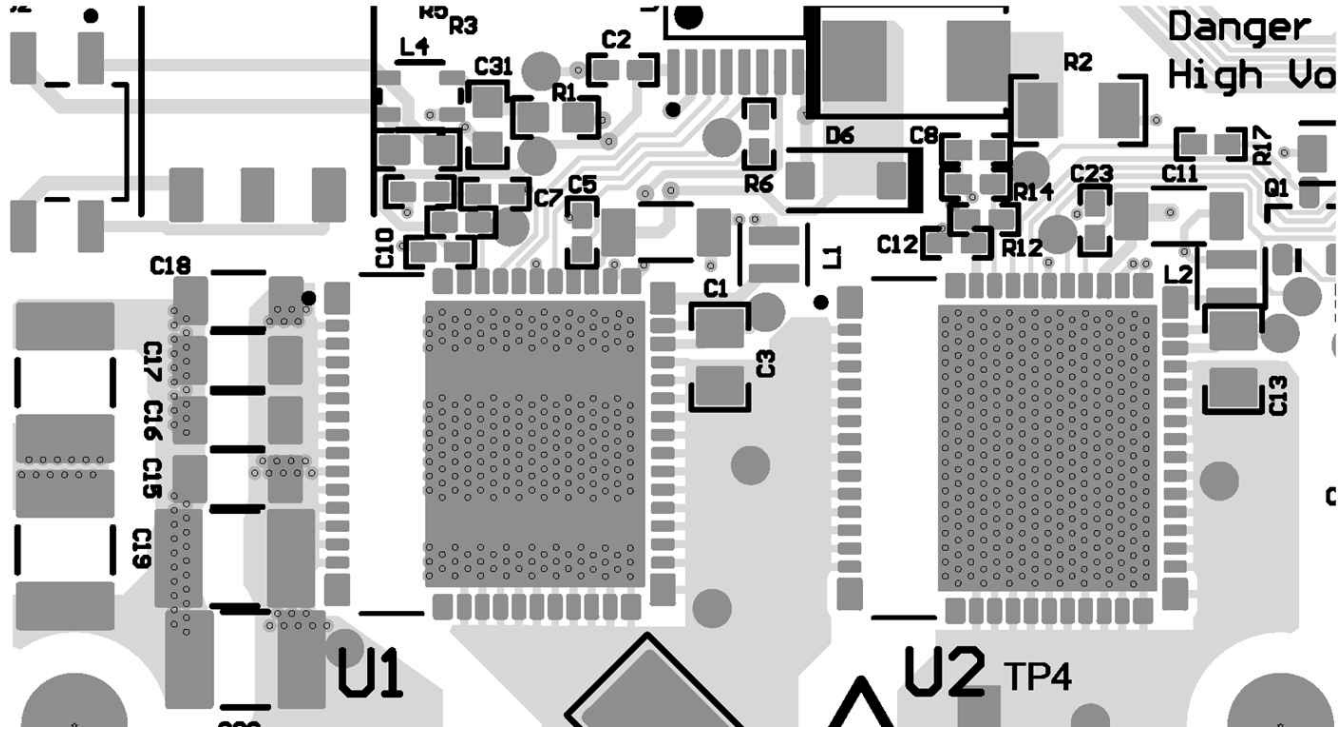

图 12-1. Half-Bridge Top-Layer Layout

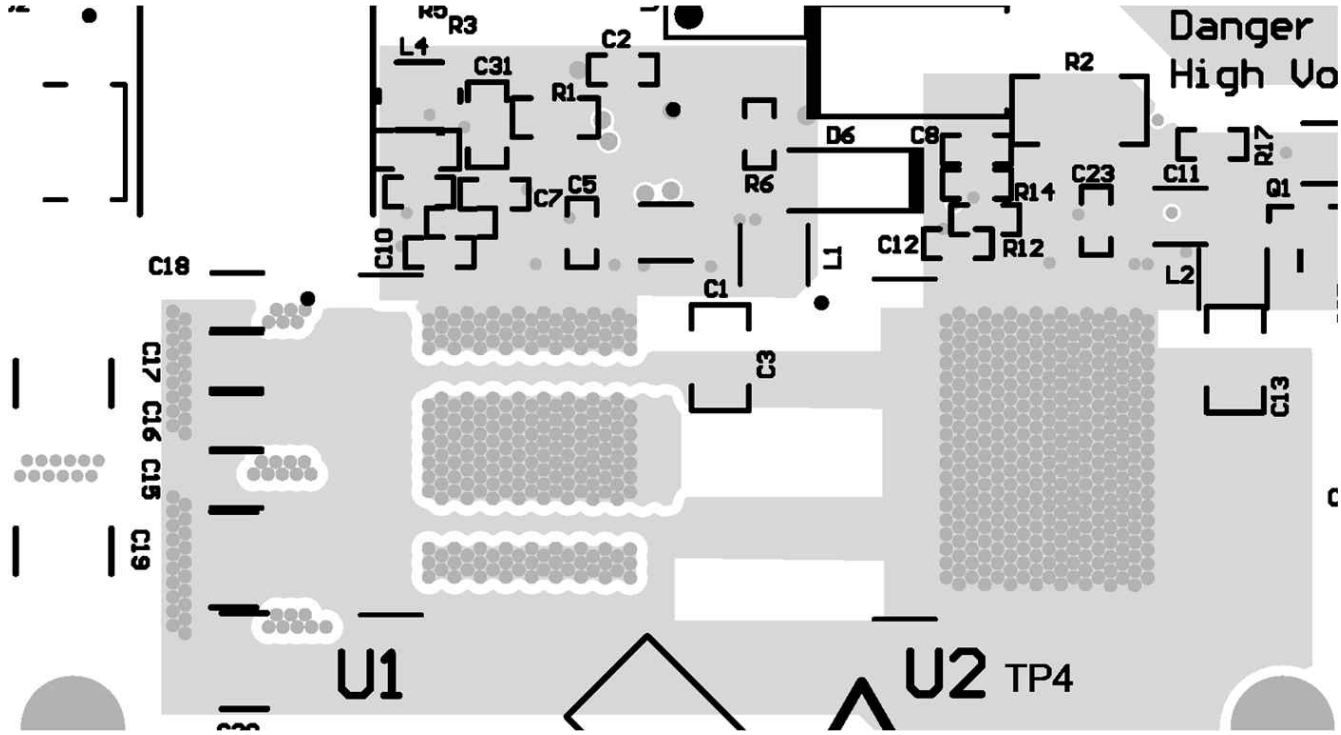

图 12-2. Half-Bridge Mid-Layer Layout

Copyright © 2022 Texas Instruments Incorporated

13 Device and Documentation Support

13.1 Documentation Support

13.1.1 Related Documentation

- Texas Instruments, *High Voltage Half Bridge Design Guide for LMG3410 Smart GaN FET* application note.
- Texas Instruments, *A New Approach to Validate GaN FET Reliability to Power-line Surges Under Use-conditions.*

13.2 接收文档更新通知

要接收文档更新通知，请导航至 ti.com 上的器件产品文件夹。点击*订阅更新* 进行注册，即可每周接收产品信息更改摘要。有关更改的详细信息，请查看任何已修订文档中包含的修订历史记录。

13.3 支持资源

TI E2E™ 支持论坛是工程师的重要参考资料，可直接从专家获得快速、经过验证的解答和设计帮助。搜索现有解答或提出自己的问题可获得所需的快速设计帮助。

链接的内容由各个贡献者“按原样”提供。这些内容并不构成 TI 技术规范，并且不一定反映 TI 的观点；请参阅 TI 的《使用条款》。

13.4 Trademarks

FlyBuck™ is a trademark of Texas Instruments.
TI E2E™ is a trademark of Texas Instruments.
所有商标均为其各自所有者的财产。

13.5 Electrostatic Discharge Caution

This integrated circuit can be damaged by ESD. Texas Instruments recommends that all integrated circuits be handled with appropriate precautions. Failure to observe proper handling and installation procedures can cause damage.

ESD damage can range from subtle performance degradation to complete device failure. Precision integrated circuits may be more susceptible to damage because very small parametric changes could cause the device not to meet its published specifications.

13.6 Export Control Notice

Recipient agrees to not knowingly export or re-export, directly or indirectly, any product or technical data (as defined by the U.S., EU, and other Export Administration Regulations) including software, or any controlled product restricted by other applicable national regulations, received from disclosing party under nondisclosure obligations (if any), or any direct product of such technology, to any destination to which such export or re-export is restricted or prohibited by U.S. or other applicable laws, without obtaining prior authorization from U.S. Department of Commerce and other competent Government authorities to the extent required by those laws.

13.7 术语表

TI 术语表　　本术语表列出并解释了术语、首字母缩略词和定义。

14 Mechanical, Packaging, and Orderable Information

The following pages include mechanical, packaging, and orderable information. This information is the most current data available for the designated devices. This data is subject to change without notice and revision of this document. For browser-based versions of this data sheet, refer to the left-hand navigation.

PACKAGE OUTLINE

RQZ0054A-C01

VQFN - 1 mm max height

PLASTIC QUAD FLATPACK - NO LEAD

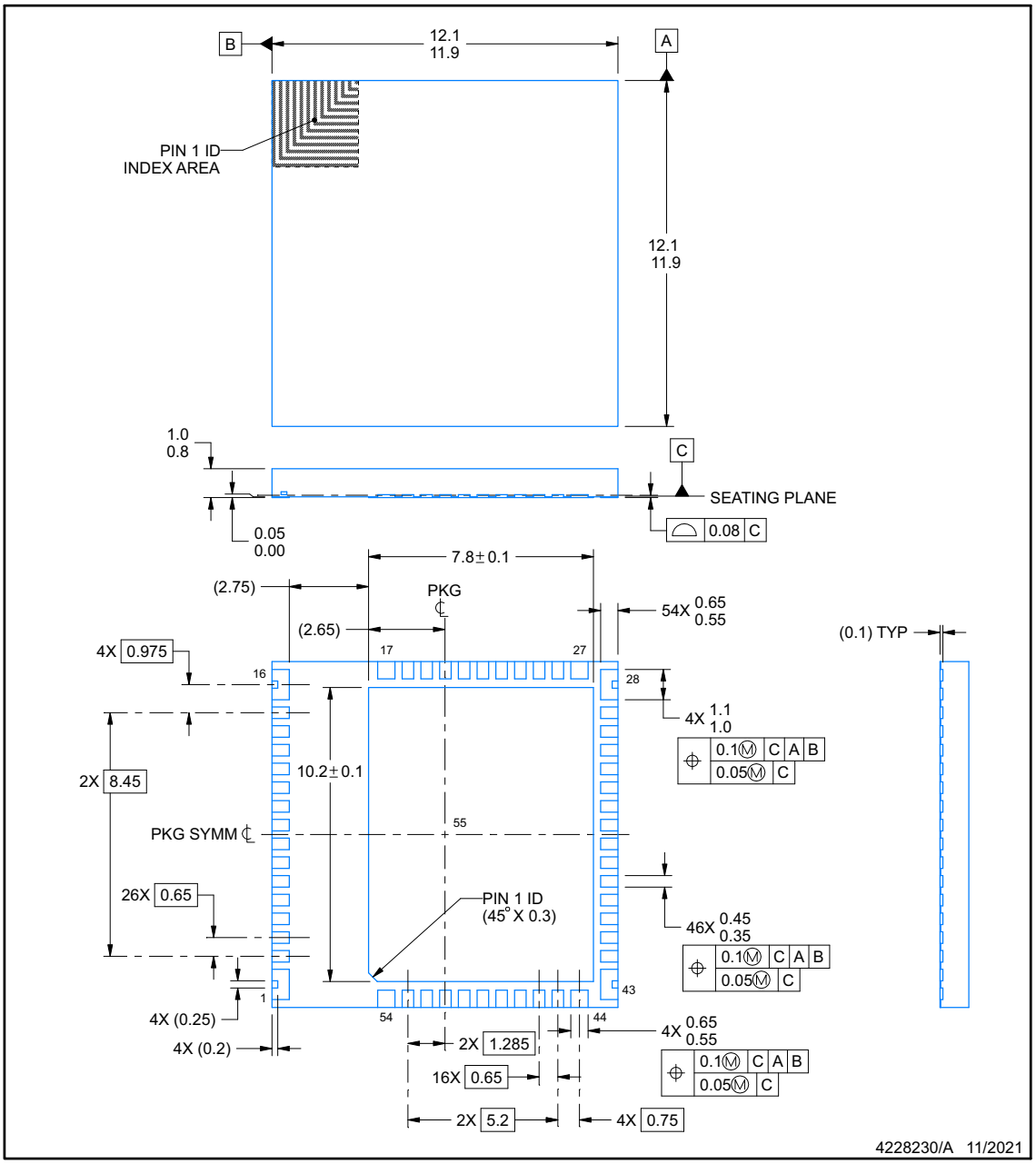

NOTES:

1. All linear dimensions are in millimeters. Any dimensions in parenthesis are for reference only. Dimensioning and tolerancing per ASME Y14.5M.
2. This drawing is subject to change without notice.
3. The package thermal pad must be soldered to the printed circuit board for thermal and mechanical performance.

TEXAS INSTRUMENTS
www.ti.com

Copyright © 2022 Texas Instruments Incorporated

EXAMPLE BOARD LAYOUT

RQZ0054A-C01

VQFN - 1 mm max height

PLASTIC QUAD FLATPACK - NO LEAD

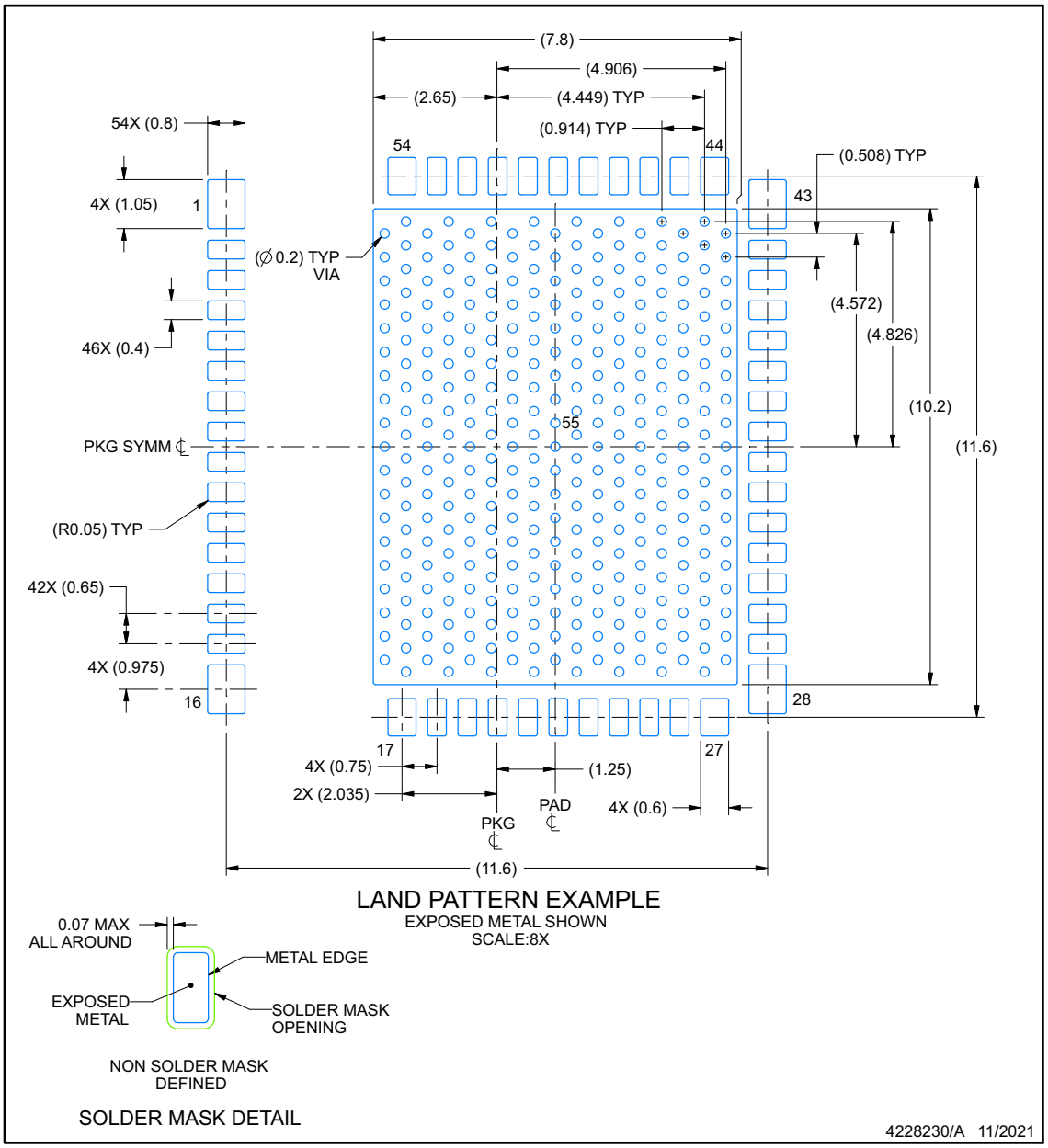

NOTES: (continued)

4. This package is designed to be soldered to a thermal pad on the board. For more information, see Texas Instruments literature number SLUA271 (www.ti.com/lit/slua271).
5. All pads must be NSMD for mechanical performance, refer to the device datasheet for trace connection recommendations to the pads.
6. Filling the thermal pad with thermal vias is recommended for thermal performance, refer to the device datasheet. Vias must be filled and planarized.

Copyright © 2022 Texas Instruments Incorporated

EXAMPLE STENCIL DESIGN

RQZ0054A-C01 **VQFN - 1 mm max height**

PLASTIC QUAD FLATPACK - NO LEAD

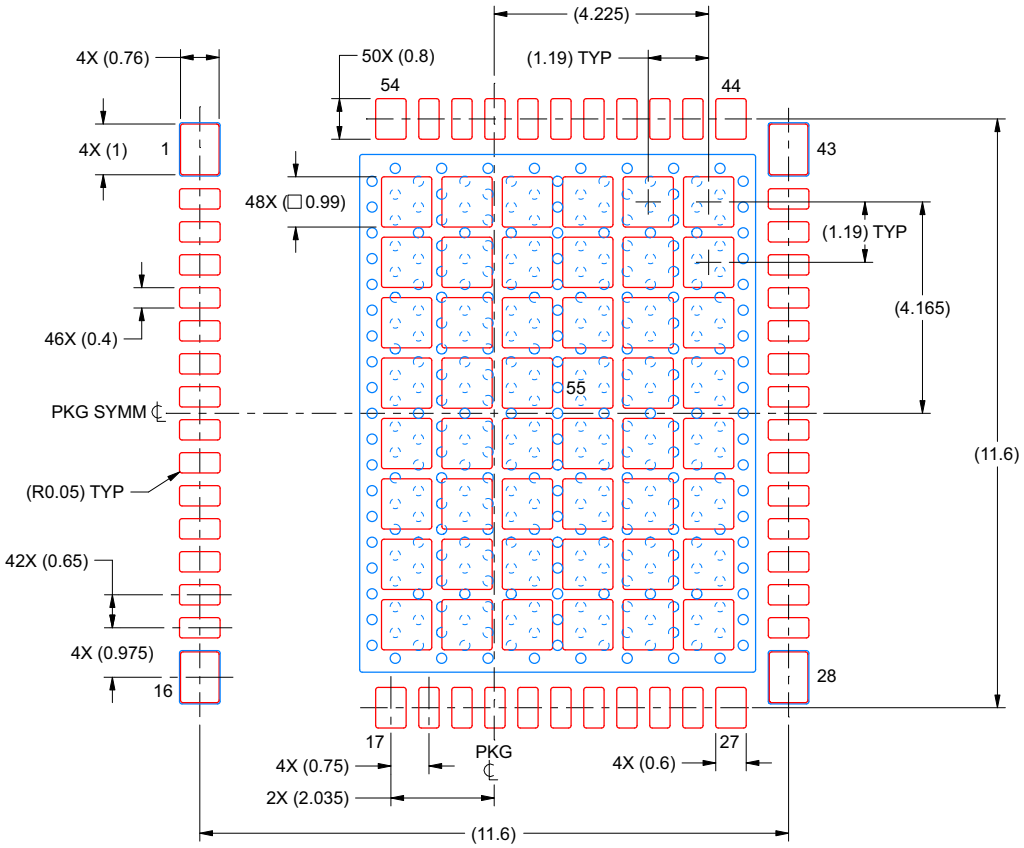

SOLDER PASTE EXAMPLE
BASED ON 0.125 mm THICK STENCIL

PRINTED SOLDER COVERAGE BY AREA UNDER PACKAGE
PADS 1, 16, 28 & 43: 90%
PAD 55: 60%
SCALE:8X

4228230/A 11/2021

NOTES: (continued)

7. Laser cutting apertures with trapezoidal walls and rounded corners may offer better paste release. IPC-7525 may have alternate design recommendations.

Copyright © 2022 Texas Instruments Incorporated

PACKAGING INFORMATION

Orderable Device	Status (1)	Package Type	Package Drawing	Pins	Package Qty	Eco Plan (2)	Lead finish/ Ball material (6)	MSL Peak Temp (3)	Op Temp (°C)	Device Marking (4/5)	Samples
LMG3422R050RQZR	ACTIVE	VQFN	RQZ	54	2000	RoHS-Exempt & Green	NIPDAU	Level-3-260C-168 HR	-40 to 150	LMG3422 R050	Samples
LMG3422R050RQZT	ACTIVE	VQFN	RQZ	54	250	RoHS-Exempt & Green	NIPDAU	Level-3-260C-168 HR	-40 to 150	LMG3422 R050	Samples
LMG3425R050RQZR	ACTIVE	VQFN	RQZ	54	2000	RoHS-Exempt & Green	NIPDAU	Level-3-260C-168 HR	-40 to 150	LMG3425 R050	Samples
LMG3425R050RQZT	ACTIVE	VQFN	RQZ	54	250	RoHS-Exempt & Green	NIPDAU	Level-3-260C-168 HR	-40 to 150	LMG3425 R050	Samples
XLMG3422R050RQZT	ACTIVE	VQFN	RQZ	54	250	RoHS-Exempt & Green	NIPDAU	Level-3-260C-168 HR	-40 to 150	XLMG3422 (R050, R050G1D20)	Samples
XLMG3425R050RQZT	ACTIVE	VQFN	RQZ	54	250	RoHS & Non-Green	Call TI	Level-3-260C-168 HR	-40 to 150	XLMG3425 R050G10D21	Samples

(1) The marketing status values are defined as follows:
ACTIVE: Product device recommended for new designs.
LIFEBUY: TI has announced that the device will be discontinued, and a lifetime-buy period is in effect.
NRND: Not recommended for new designs. Device is in production to support existing customers, but TI does not recommend using this part in a new design.
PREVIEW: Device has been announced but is not in production. Samples may or may not be available.
OBSOLETE: TI has discontinued the production of the device.

(2) **RoHS:** TI defines "RoHS" to mean semiconductor products that are compliant with the current EU RoHS requirements for all 10 RoHS substances, including the requirement that RoHS substance do not exceed 0.1% by weight in homogeneous materials. Where designed to be soldered at high temperatures, "RoHS" products are suitable for use in specified lead-free processes. TI may reference these types of products as "Pb-Free".
RoHS Exempt: TI defines "RoHS Exempt" to mean products that contain lead but are compliant with EU RoHS pursuant to a specific EU RoHS exemption.
Green: TI defines "Green" to mean the content of Chlorine (Cl) and Bromine (Br) based flame retardants meet JS709B low halogen requirements of <=1000ppm threshold. Antimony trioxide based flame retardants must also meet the <=1000ppm threshold requirement.

(3) MSL, Peak Temp. - The Moisture Sensitivity Level rating according to the JEDEC industry standard classifications, and peak solder temperature.

(4) There may be additional marking, which relates to the logo, the lot trace code information, or the environmental category on the device.

(5) Multiple Device Markings will be inside parentheses. Only one Device Marking contained in parentheses and separated by a "~" will appear on a device. If a line is indented then it is a continuation of the previous line and the two combined represent the entire Device Marking for that device.

(6) Lead finish/Ball material - Orderable Devices may have multiple material finish options. Finish options are separated by a vertical ruled line. Lead finish/Ball material values may wrap to two lines if the finish value exceeds the maximum column width.

Important Information and Disclaimer: The information provided on this page represents TI's knowledge and belief as of the date that it is provided. TI bases its knowledge and belief on information provided by third parties, and makes no representation or warranty as to the accuracy of such information. Efforts are underway to better integrate information from third parties. TI has taken and continues to take reasonable steps to provide representative and accurate information but may not have conducted destructive testing or chemical analysis on incoming materials and chemicals. TI and TI suppliers consider certain information to be proprietary, and thus CAS numbers and other limited information may not be available for release.

In no event shall TI's liability arising out of such information exceed the total purchase price of the TI part(s) at issue in this document sold by TI to Customer on an annual basis.

TAPE AND REEL INFORMATION

REEL DIMENSIONS

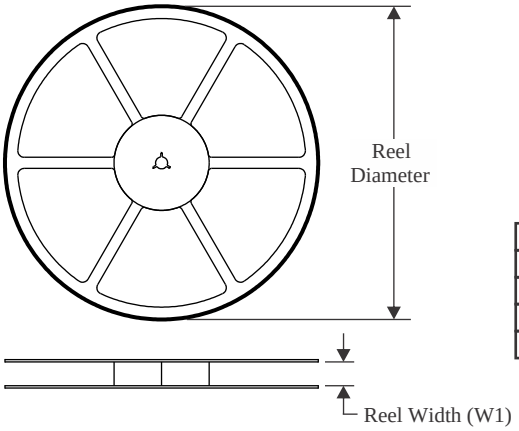

TAPE DIMENSIONS

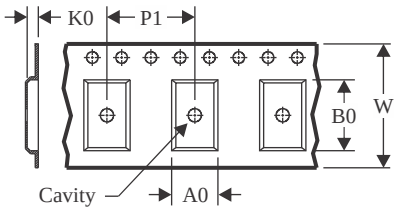

A0	Dimension designed to accommodate the component width
B0	Dimension designed to accommodate the component length
K0	Dimension designed to accommodate the component thickness
W	Overall width of the carrier tape
P1	Pitch between successive cavity centers

QUADRANT ASSIGNMENTS FOR PIN 1 ORIENTATION IN TAPE

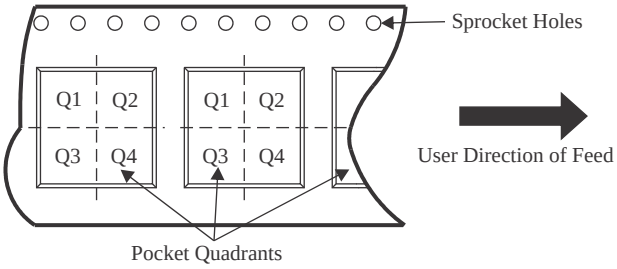

*All dimensions are nominal

Device	Package Type	Package Drawing	Pins	SPQ	Reel Diameter (mm)	Reel Width W1 (mm)	A0 (mm)	B0 (mm)	K0 (mm)	P1 (mm)	W (mm)	Pin1 Quadrant
LMG3422R050RQZR	VQFN	RQZ	54	2000	330.0	24.4	12.35	12.35	1.5	16.0	24.0	Q2
LMG3422R050RQZT	VQFN	RQZ	54	250	180.0	24.4	12.35	12.35	1.5	16.0	24.0	Q2
LMG3425R050RQZR	VQFN	RQZ	54	2000	330.0	24.4	12.35	12.35	1.5	16.0	24.0	Q2
LMG3425R050RQZT	VQFN	RQZ	54	250	180.0	24.4	12.35	12.35	1.5	16.0	24.0	Q2

TAPE AND REEL BOX DIMENSIONS

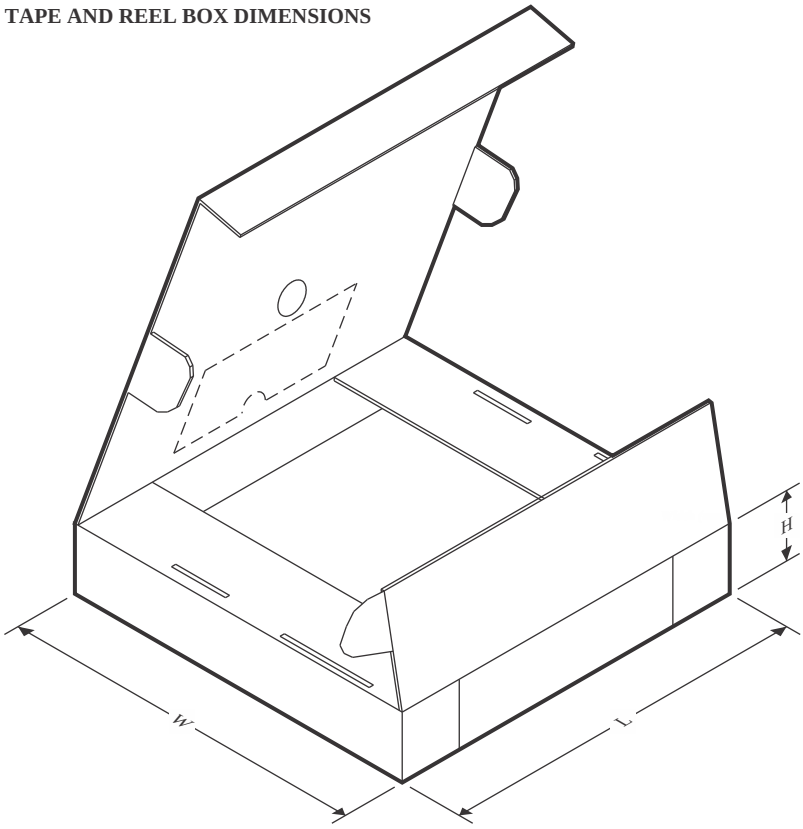

*All dimensions are nominal

Device	Package Type	Package Drawing	Pins	SPQ	Length (mm)	Width (mm)	Height (mm)
LMG3422R050RQZR	VQFN	RQZ	54	2000	350.0	350.0	43.0
LMG3422R050RQZT	VQFN	RQZ	54	250	213.0	191.0	55.0
LMG3425R050RQZR	VQFN	RQZ	54	2000	350.0	350.0	43.0
LMG3425R050RQZT	VQFN	RQZ	54	250	213.0	191.0	55.0

重要声明和免责声明

TI“按原样”提供技术和可靠性数据（包括数据表）、设计资源（包括参考设计）、应用或其他设计建议、网络工具、安全信息和其他资源，不保证没有瑕疵且不做出任何明示或暗示的担保，包括但不限于对适销性、某特定用途方面的适用性或不侵犯任何第三方知识产权的暗示担保。

这些资源可供使用 TI 产品进行设计的熟练开发人员使用。您将自行承担以下全部责任：(1) 针对您的应用选择合适的 TI 产品，(2) 设计、验证并测试您的应用，(3) 确保您的应用满足相应标准以及任何其他功能安全、信息安全、监管或其他要求。

这些资源如有变更，恕不另行通知。TI 授权您仅可将这些资源用于研发本资源所述的 TI 产品的应用。严禁对这些资源进行其他复制或展示。您无权使用任何其他 TI 知识产权或任何第三方知识产权。您应全额赔偿因在这些资源的使用中对 TI 及其代表造成的任何索赔、损害、成本、损失和债务，TI 对此概不负责。

TI 提供的产品受 TI 的销售条款或 ti.com 上其他适用条款/TI 产品随附的其他适用条款的约束。TI 提供这些资源并不会扩展或以其他方式更改 TI 针对 TI 产品发布的适用的担保或担保免责声明。

TI 反对并拒绝您可能提出的任何其他或不同的条款。

邮寄地址：Texas Instruments, Post Office Box 655303, Dallas, Texas 75265
Copyright © 2022，德州仪器 (TI) 公司