LMH32404-Q1 具有集成式钳位和环境光消除功能的汽车类四通道、差分输出、多路复用跨阻放大器

1 特性

- 符合面向汽车应用的 AEC-Q100 标准：
  - 温度等级 1：–40°C 至 +125°C，T_A
- 增益：20kΩ
- 性能，C_{PD} = 1pF：
  - 带宽：350 MHz
  - 输入参考噪声：$56nA_{RMS}$
  - 上升，下降时间：1.25ns
- 静态电流：28 mA/通道
- 待机模式：10 mA/通道
- 低功耗模式：2.5mA（4 个通道）
- 通道开关时间：10ns
- 集成式环境光消除
- 集成式 100mA 保护钳位
- 4 个输入通道和 4 个差分输出通道
- 集成的多路复用器可实现光学传感器和 ADC/TDC 之间的灵活配置
- 可以将多个 LMH32404 并联组合，以实现更宽的视野 (FoV)

2 应用

- 机械扫描激光雷达
- 固态扫描激光雷达
- 激光测距仪
- 安全区域扫描仪

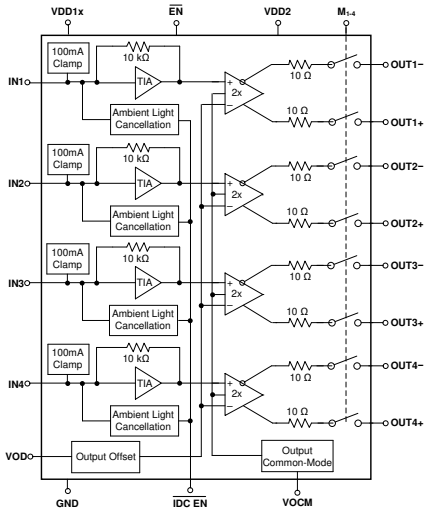

简化版方框图

3 说明

LMH32404-Q1 是一款四通道、单端输入转差分输出跨阻放大器 (TIA)，适用于光探测和测距 (LIDAR) 应用和激光测距系统。

LMH32404-Q1 在每个通道上集成了一个 100mA 钳位，可以为放大器提供保护并允许器件迅速从过载输入状况中恢复。LMH32404-Q1 还在每个通道上提供一个集成式环境光消除 (ALC) 电路，可取代光电二极管与放大器之间的交流耦合，从而节省布板空间和系统成本。测量直流和低频时，应禁用 ALC 回路。

每个 LMH32404-Q1 通道在输出端有集成的开关，用于断开差分输出放大器与输出引脚的连接，并将通道置于待机模式。在不同通道之间切换时，转换时间仅为 10ns。当不使用放大器时，可以使用 $\overline{EN}$ 引脚将 LMH32404-Q1 置于低功耗模式，以节省能源。

器件信息(1)

器件型号	封装	封装尺寸（标称值）
LMH32404-Q1	VQFN (28)	5.00mm × 4.00mm

(1) 要了解所有可用封装，请参阅数据表末尾的封装选项附录。

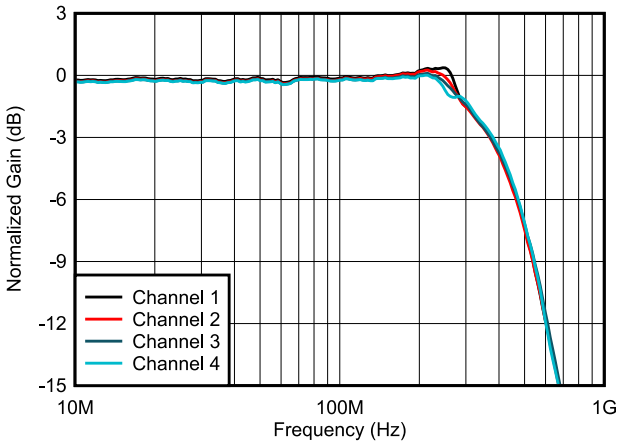

闭环带宽

本文档旨在为方便起见，提供有关 TI 产品中文版本的信息，以确认产品的概要。有关适用的官方英文版本的最新信息，请访问 www.ti.com，其内容始终优先。TI 不保证翻译的准确性和有效性。在实际设计之前，请务必参考最新版本的英文版本。

Table of Contents

1 特性 1
2 应用 1
3 说明 1
4 Revision History 2
5 Pin Configuration and Functions 3
6 Specifications 5
6.1 Absolute Maximum Ratings 5
6.2 ESD Ratings 5
6.3 Recommended Operating Conditions 5
6.4 Thermal Information 5
6.5 Electrical Characteristics 6
6.6 Electrical Characteristics: Logic Threshold and Switching Characteristics 9
6.7 Typical Characteristics 10
7 Detailed Description 16
7.1 Overview 16
7.2 Functional Block Diagram 17
7.3 Feature Description 18
7.4 Device Functional Modes 20
8 Application and Implementation 23
8.1 Application Information 23
8.2 Typical Application 25
9 Power Supply Recommendations 28
10 Layout 29
10.1 Layout Guidelines 29
10.2 Layout Example 29
11 Device and Documentation Support 30
11.1 Device Support 30
11.2 Documentation Support 30
11.3 Receiving Notification of Documentation Updates 30
11.4 支持资源 30
11.5 Trademarks 30
11.6 Electrostatic Discharge Caution 30
11.7 术语表 30
12 Mechanical, Packaging, and Orderable Information 30

4 Revision History

注：以前版本的页码可能与当前版本的页码不同

Changes from Revision * (December 2020) to Revision A (November 2021)	Page
• 将数据表的状态从*预告信息*更改为*量产数据*	1

Copyright © 2022 Texas Instruments Incorporated

5 Pin Configuration and Functions

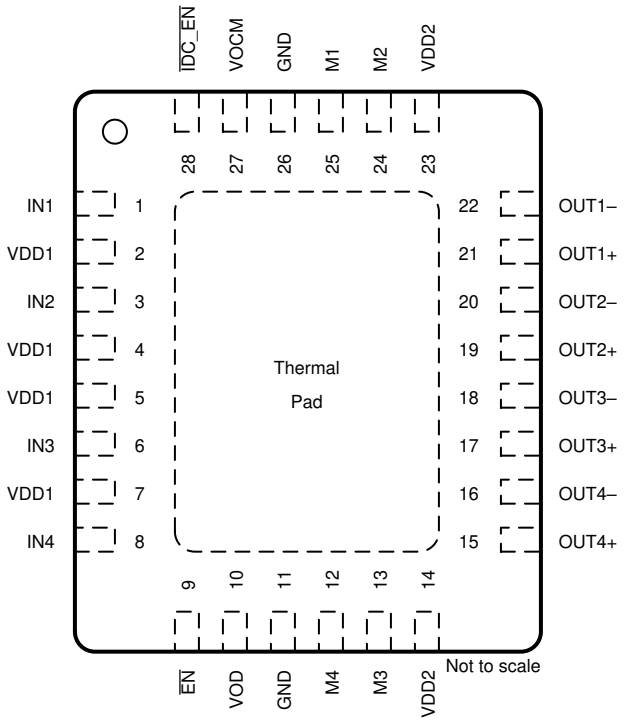

图 5-1. RHF Package, 28-Pin VQFN, Top View

表 5-1. Pin Functions

PIN		I/O	DESCRIPTION
NAME	NO.		
$\overline{EN}$	9	I	Device enable pin. $\overline{EN}$ = logic low = normal operation (default); $\overline{EN}$ = logic high = low power mode.[(1)]
GND	11,26	I	Amplifier ground.
$\overline{IDC_EN}$	28	I	Ambient light cancellation loop enable. $\overline{IDC_EN}$ = logic low = enable DC cancellation (default); $\overline{IDC_EN}$ = logic high = disable DC cancellation.[(1)]
IN1	1	I	Transimpedance amplifier input - Channel 1.
IN2	3	I	Transimpedance amplifier input - Channel 2.
IN3	6	I	Transimpedance amplifier input - Channel 3.
IN4	8	I	Transimpedance amplifier input - Channel 4.
M1	25	I	Select Channel 1. M1 = logic high = Channel 1 operational and output switches closed. M1 = logic low (default) = Channel 1 in standby power mode and output switches open. [(1)]
M2	24	I	Select Channel 2. M2 = logic high = Channel 2 operational and output switches closed. M2 = logic low (default) = Channel 2 in standby power mode and output switches open. [(1)]
M3	13	I	Select Channel 3. M3 = logic high = Channel 3 operational and output switches closed. M3 = logic low (default) = Channel 3 in standby power mode and output switches open. [(1)]
M4	12	I	Select Channel 4. M4 = logic high = Channel 4 operational and output switches closed. M4 = logic low (default) = Channel 4 in standby power mode and output switches open. [(1)]
OUT1 –	22	O	Channel 1 inverting amplifier output. When light is incident on the photodiode the output pin transitions in a negative direction from the no light condition.
OUT1+	21	O	Channel 1 noninverting amplifier output. When light is incident on the photodiode the output pin transitions in a positive direction from the no light condition.
OUT2 –	20	O	Channel 2 inverting amplifier output. When light is incident on the photodiode the output pin transitions in a negative direction from the no light condition.
OUT2+	19	O	Channel 2 noninverting amplifier output. When light is incident on the photodiode the output pin transitions in a positive direction from the no light condition.

Copyright © 2022 Texas Instruments Incorporated

表 5-1. Pin Functions (continued)

PIN		I/O	DESCRIPTION
NAME	NO.		
OUT3 –	18	O	Channel 3 inverting amplifier output. When light is incident on the photodiode the output pin transitions in a negative direction from the no light condition.
OUT3+	17	O	Channel 3 noninverting amplifier output. When light is incident on the photodiode the output pin transitions in a positive direction from the no light condition.
OUT4 –	16	O	Channel 4 inverting amplifier output. When light is incident on the photodiode the output pin transitions in a negative direction from the no light condition.
OUT4+	15	O	Channel 4 noninverting amplifier output. When light is incident on the photodiode the output pin transitions in a positive direction from the no light condition.
VDD1	2, 4, 5, 7	I	Positive power supply for the transimpedance amplifier stage. Each pin should be tied to the same power supply with independent power-supply bypassing.
VDD2	14,23	I	Positive power supply for the differential amplifier stage. Tie VDD1 and VDD2 to the same power supply with independent power-supply bypassing.
VOCM	27	I	Differential amplifier common-mode output control.
VOD	10	I	Differential amplifier differential output offset control.
Thermal pad		—	Connect the thermal pad to the same potential as pin 11 and 26 (GND).

(1) TI recommends driving a digital pin with a low-impedance source rather than leaving the pin floating because fast-moving transients can couple into the pin and inadvertently change the logic level.

Copyright © 2022 Texas Instruments Incorporated

6 Specifications

6.1 Absolute Maximum Ratings

over operating free-air temperature range (unless otherwise noted)[1]

		MIN	MAX	UNIT
V_{DD1}, V_{DD2}	Total supply voltage, (V_{DD})[2]		3.65	V
	Voltage at Output pins	0	V_{DD}	V
	Voltage at Logic pins	–0.2	V_{DD}	V
I_{IN}	Continuous current into IN		25	mA
I_{OUT}	Continuous output current		35	mA
T_J	Junction temperature		150	°C
T_A	Operating free-air temperature	–40	125	°C
T_{stg}	Storage temperature	–65	150	°C

(1) Stresses beyond those listed under *Absolute Maximum Rating* may cause permanent damage to the device. These are stress ratings only, which do not imply functional operation of the device at these or any other conditions beyond those indicated under *Recommended Operating Condition*. Exposure to absolute-maximum-rated conditions for extended periods may affect device reliability.
(2) VDD1 and VDD2 should always be tied to the same supply and have separate power-supply bypass capacitors.

6.2 ESD Ratings

			VALUE	UNIT
$V_{(ESD)}$	Electrostatic discharge	Human body model (HBM), per AEC Q100-002[1]	±1500	V
		Charged device model (CDM), per AEC Q100-011	±1000	

(1) AEC Q100-002 indicates that HBM stressing shall be in accordance with the ANSI/ESDA/JEDEC JS-001 specification.

6.3 Recommended Operating Conditions

over operating free-air temperature range (unless otherwise noted)

		MIN	NOM	MAX	UNIT
V_{DD}	Total supply voltage	3	3.3	3.45	V
T_A	Operating free-air temperature	–40		125	°C

6.4 Thermal Information

THERMAL METRIC[1]		LMH32404-Q1 RHF (VQFN) 28 PINS	UNIT
$R_{\theta JA}$	Junction-to-ambient thermal resistance	39.7	°C/W
$R_{\theta JC(top)}$	Junction-to-case (top) thermal resistance	31.5	°C/W
$R_{\theta JB}$	Junction-to-board thermal resistance	17.8	°C/W
Ψ_{JT}	Junction-to-top characterization parameter	0.8	°C/W
Ψ_{JB}	Junction-to-board characterization parameter	17.8	°C/W
$R_{\theta JC(bot)}$	Junction-to-case (bottom) thermal resistance	6.0	°C/W

(1) For more information about traditional and new thermal metrics, see the Semiconductor and IC Package Thermal Metrics application report.

6.5 Electrical Characteristics

V_{DD} = 3.3 V, V_{OCM} = Open, V_{OD} = 0 V, C_{PD} [1] = 1 pF, $\overline{EN}$ = 0 V, $\overline{IDC_EN}$ = 3.3 V, R_L = 100 Ω (differential load between OUT+ and OUT-), and T_A = 25℃. (unless otherwise noted)

PARAMETER		TEST CONDITIONS	MIN	TYP	MAX	UNIT
AC PERFORMANCE						
SSBW	Small-signal bandwidth	V_{OUT} = 100 mV_{PP}		350		MHz
LSBW	Large-signal bandwidth	V_{OUT} = 1 V_{PP}		300		MHz
t_R, t_F	Rise and fall time	V_{OUT} = 100 mV_{PP}, Pulse width = 10 ns		1.25		ns
	Slew Rate[4]	V_{OUT} = 1 V_{PP}, Pulse width = 10 ns		750		V/µs
	Overload recovery time (1% settling)	I_{IN} = 100 mA, Pulse width = 10 ns		12		ns
	Overload pulse width extension[5]	I_{IN} = 100 mA, Pulse width = 10 ns		5		ns
i_N	Integrated input current noise	f = 250 MHz		56		nA_{RMS}
	Adjacent channel crosstalk	f = 100 MHz		-49		dBc
	Non adjacent channel crosstalk	f = 100 MHz		-58		dBc
	All hostile channels crosstalk	f = 100 MHz		-39		dBc
DC PERFORMANCE						
Z_{21}	Small-signal transimpedance gain[6]		17	20	23	kΩ
	Channel-to-channel gain matching			±0.1		%
V_{OD}	Differential output offset voltage (V_{OUT-} – V_{OUT+})		–20	±5	20	mV
	Differential output offset voltage drift, $\Delta V_{OD}/\Delta T_A$			±20		µV/°C
INPUT PERFORMANCE						
V_{IN}	Default input bias voltage	Input pin floating	2.42	2.47	2.52	V
	Default input bias voltage drift, $\Delta V_{IN}/\Delta T_A$	Input pin floating		1.1		mV/°C
I_{IN}	DC Input current range	Z_{21} < 3-dB degradation from I_{IN} = 5 µA	60	72		µA
OUTPUT PERFORMANCE						
V_{OH}	Single-sided output voltage swing(high)[2]	T_A = 25°C	2.85	2.9		V
V_{OL}	Single-sided output voltage swing (low)[2]	T_A = 25°C		0.36	0.39	V
I_{OUT}	Linear output drive (sink and source)	T_A = 25°C, I_{IN} = 50 µA , R_L = 25 Ω	24	26.6	32	mA
		T_A = –40°C, I_{IN} = 50 µA , R_L = 25 Ω		27.1		
		T_A = 125°C, I_{IN} = 50 µA , R_L = 25 Ω		25.1		
I_{SC}	Output short-circuit current (differential) [3]			70		mA
Z_{OUT}	DC differential output impedance	M_X = high	18	21	24	Ω
		M_X = low		1		MΩ
OUTPUT COMMON-MODE CONTROL (V_{OCM}) PERFORMANCE						
SSBW	Small-signal bandwidth	V_{OCM} = 100 mV_{PP} at VOCM pin		375		MHz
LSBW	Large-signal bandwidth	V_{OCM} = 1 V_{PP} at VOCM pin		120		MHz
e_N	Output common-mode noise	f = 10 MHz, 1 nF capacitor to GND on VOCM pin		15		nV/√Hz
A_V	Gain, ($\Delta V_{OCM}/\Delta$ VOCM)	IN floating, VOCM = 1.1 V (driven)		1		V/V
	Gain Error	T_A = 25°C, VOCM = 0.7 V to 2.3 V	–2%	0.5%	2%	
		T_A = –40°C to 125°C, VOCM = 0.7 V to 2.3 V		±1%		
	Input impedance			17		kΩ
VOCM	VOCM pin default offset from 1.1 V	VOCM floating, (VOCM - 1.1 V)	–25	8	45	mV
	V_{OCM} error vs Input current, $\Delta V_{OCM}/\Delta I_{IN}$	VOCM driven to 1.1 V		10		V/A

Copyright © 2022 Texas Instruments Incorporated

6.5 Electrical Characteristics (continued)

V_{DD} = 3.3 V, V_{OCM} = Open, V_{OD} = 0 V, C_{PD} [(1)] = 1 pF, $\overline{EN}$ = 0 V, $\overline{IDC_EN}$ = 3.3 V, R_L = 100 Ω (differential load between OUT+ and OUT-), and T_A = 25℃. (unless otherwise noted)

PARAMETER		TEST CONDITIONS	MIN	TYP	MAX	UNIT
V_{OCM}	Output common-mode voltage, $(V_{OUT+} + V_{OUT-})/2$	T_A = 25°C, VOCM floating	1	1.1	1.2	V
	Output common-mode voltage drift, $(\Delta V_{OCM}/\Delta T_A)$	T_A = –40°C to 125°C, VOCM floating		300		µV/°C
V_{OCM}	Output common-mode voltage, $(V_{OUT+} + V_{OUT-})/2$	T_A = 25°C, VOCM driven to 1.1V	1.05	1.1	1.15	V
	Output common-mode voltage drift, $(\Delta V_{OCM}/\Delta T_A)$	T_A = –40°C to 125°C, VOCM driven to 1.1V		–10		µV/°C
	VOCM headroom to positive supply voltage	T_A = 25°C, V_{OCM} offset shift from VOCM = 1.1 V (driven) < 10-mV		1.2	1.3	V
		T_A = –40°C to 125°C, V_{OCM} offset shift from VOCM = 1.1 V (driven) < 10-mV		1		V
	VOCM headroom to negative supply voltage	T_A = 25°C, V_{OCM} offset shift from VOCM = 1.1 V (driven) < 10-mV		0.2	0.65	V
		T_A = –40°C to 125°C, V_{OCM} offset shift from VOCM = 1.1 V (driven) < 10-mV		0.25		V
OUTPUT DIFFERENTIAL OFFSET (V_{OD}) PERFORMANCE						
SSBW	Small-signal bandwidth	VOD = 100 mV_{PP}		45		MHz
LSBW	Large-signal bandwidth	VOD = 1 V_{PP}		17		MHz
V_{OD}	Default VOD pin voltage			0.5		V
V_{OS_D}	Differential output offset, $V_{OUT} = (V_{OUT-} - V_{OUT+})$	IN floating, VOD = 0.5 V	470	500	530	mV
	Differential output offset drift, $\Delta V_{OS_D}/\Delta T_A$	IN floating, VOD = 0.5 V		0.03		mV/℃
V_{OS_D}	Differential output offset, $V_{OUT} = (V_{OUT-} - V_{OUT+})$	IN floating, VOD floating	470	500	530	mV
	Differential output offset drift, $\Delta V_{OS_D}/\Delta T_A$	IN floating, VOD floating		0.05		mV/℃
A_V	Gain, $(\Delta V_{OUT}/\Delta VOD)$, where $V_{OUT} = (V_{OUT-} - V_{OUT+})$	IN floating, VOCM = 1.1 V (driven)		-1.01		V/V
	Gain Error	T_A = 25℃, VOD = 0.3 V to 1.2 V	–5%	±0.8%	5%	
		T_A = –40℃ to 125℃, VOD = 0.3 V to 1.2 V		±1.5%		
	Input impedance			2.5		kΩ
AMBIENT LIGHT CANCELLATION PERFORMANCE ($\overline{IDC_EN}$ = 0 V) [(7)]						
	Settling time, 1% (2 mV) of settled V_{OS}	I_{IN} = 0 µA → 10 µA		20		µs
		I_{IN} = 10 µA → 0 µA		60		
	Ambient light current cancellation range	Differential output offset $(V_{OUT-} - V_{OUT+})$ shift from I_{DC} = 10 µA < 10 mV	1.8	2.5		mA
POWER SUPPLY						
I_Q	Quiescent current, per channel, (VDD1 + VDD2)	M_X = 3.3 V, T_A = 25°C	22.8	27.7	32.5	mA
		M_X = 0 V, T_A = 25°C	8.5	10.4	13.4	
PSRR+	Positive power-supply rejection ratio	VDD1 = VDD2	54	74		dB
SHUTDOWN						

6.5 Electrical Characteristics (continued)

V_{DD} = 3.3 V, V_{OCM} = Open, V_{OD} = 0 V, C_{PD} (1) = 1 pF, $\overline{EN}$ = 0 V, $\overline{IDC_EN}$ = 3.3 V, R_L = 100 Ω (differential load between OUT+ and OUT-), and T_A = 25℃. (unless otherwise noted)

PARAMETER		TEST CONDITIONS	MIN	TYP	MAX	UNIT
I_Q	Total disabled quiescent current ($\overline{EN}$ = V_{DD})	T_A = 25°C		2.35	3	mA
		T_A = –40°C		2.25		
		T_A = 125°C		2.55		

(1) Input capacitance of photodiode.
(2) Output slammed to the rail and V_{OCM} adjusted to achieve output swing.
(3) Device cannot withstand continuous short-circuit between the differential outputs.
(4) Average of rising and falling slew rate.
(5) Pulse width extension measured at 50% of pulse height of a square wave.
(6) Gain measured at the amplifier output pins when driving a 100-Ω resistive load. At higher resistor loads the gain will increase.
(7) Enabling the ambient light cancellation loop will add noise to the system.

Copyright © 2022 Texas Instruments Incorporated

6.6 Electrical Characteristics: Logic Threshold and Switching Characteristics

V_{DD} = 3.3 V, V_{OCM} = Open, V_{OD} = 0 V, C_{PD} [(1)] = 1 pF, $\overline{EN}$ = 0 V, $\overline{IDC_EN}$ = 3.3 V, R_L = 100 Ω (differential load between OUT+ and OUT-), and T_A = 25℃. (unless otherwise noted)

PARAMETER		TEST CONDITIONS	MIN	TYP	MAX	UNIT
LOGIC THRESHOLD PERFORMANCE						
$\overline{EN}$ CONTROL TRANSIENT PERFORMANCE						
	Enable transition-time (1% settling)	Ambient loop disabled, f_{IN} = 25 MHz, V_{OUT} = 1 V_{PP}, I_{DC} = 0 µA		250		ns
	Disable transition-time (1% settling)	Ambient loop disabled, f_{IN} = 25 MHz, V_{OUT} = 1 V_{PP}, I_{DC} = 0 µA		8		ns
	Enable transition-time (1% settling)	Ambient loop enabled, f_{IN} = 25 MHz, V_{OUT} = 1 V_{PP}, I_{DC} = 100 µA		4		µs
	Disable transition-time (1% settling)	Ambient loop enabled, f_{IN} = 25 MHz, V_{OUT} = 1 V_{PP}, I_{DC} = 100 µA		3		ns
MULTIPLEXER CONTROL TRANSIENT PERFORMANCE						
	Channel to Channel transition-time (1% settling)	Ambient loop disabled, 0 → 0.5V transition at $V_{OUT.}$		10		ns
	Disable transition-time (1% settling)	Ambient loop disabled, f_{IN} = 25 MHz, V_{OUT} = 1 V_{PP}, I_{DC} = 0 µA		8		ns

(1) Input capacitance of photodiode.

6.7 Typical Characteristics

At V_{DD} = 3.3 V, V_{OCM} = open, V_{OD} = 0 V, C_{PD} = 1 pF, $\overline{EN}$ = 0 V (enabled), $\overline{IDC_EN}$ = 3.3 V (disabled), R_L = 100 Ω (differential load between OUT+ and OUT –), and T_A = 25°C (unless otherwise noted)

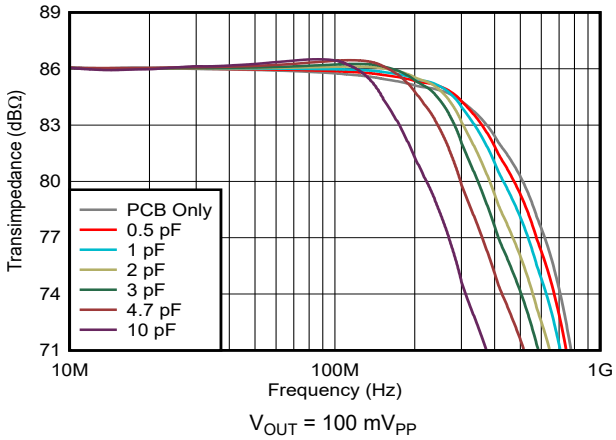

图 6-1. Small Signal Response vs Input Capacitance

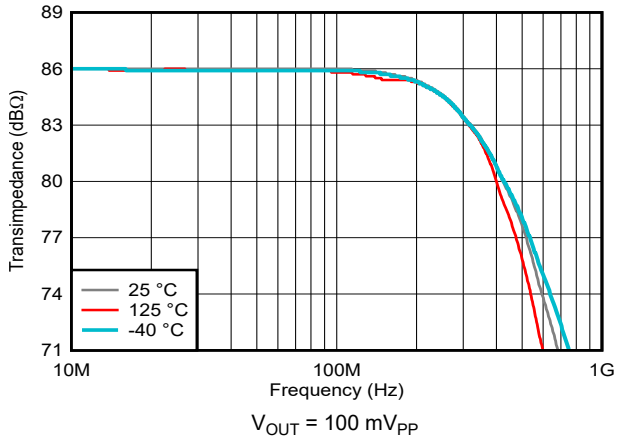

图 6-2. Small Signal Response vs Ambient Temperature

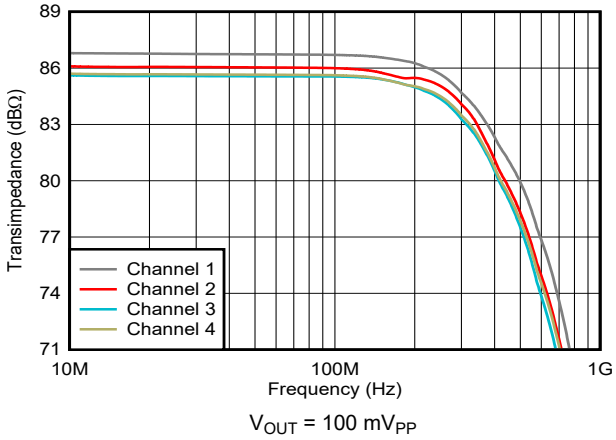

图 6-3. Small Signal Response vs Channels

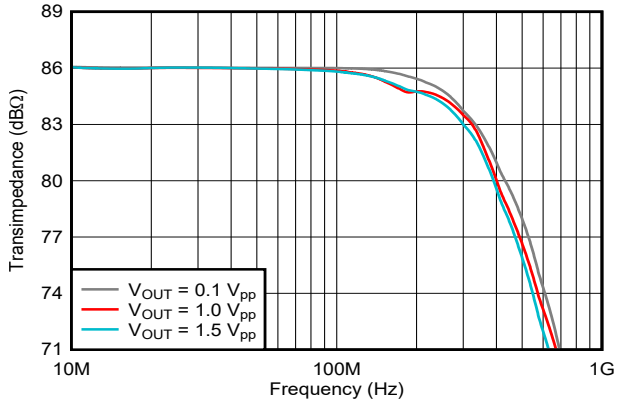

图 6-4. Frequency Response vs Output Swing

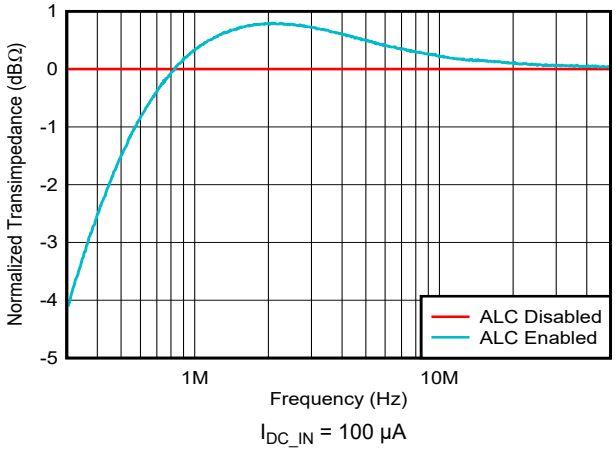

图 6-5. Low-Side Frequency Response vs Ambient Light Cancellation

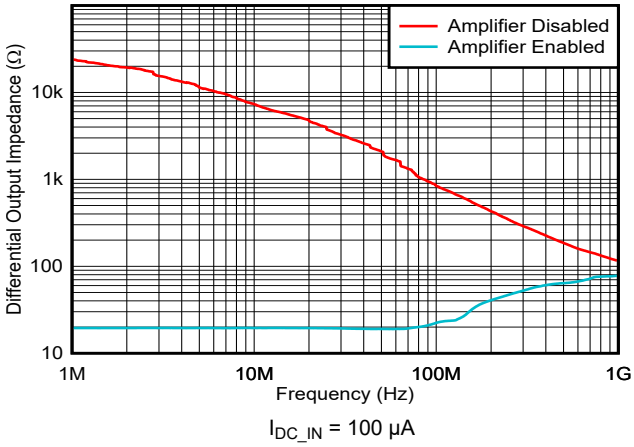

图 6-6. Closed-Loop Output Impedance vs Frequency

Copyright © 2022 Texas Instruments Incorporated

6.7 Typical Characteristics (continued)

At V_{DD} = 3.3 V, V_{OCM} = open, V_{OD} = 0 V, C_{PD} = 1 pF, $\overline{EN}$ = 0 V (enabled), $\overline{IDC_EN}$ = 3.3 V (disabled), R_L = 100 Ω (differential load between OUT+ and OUT –), and T_A = 25°C (unless otherwise noted)

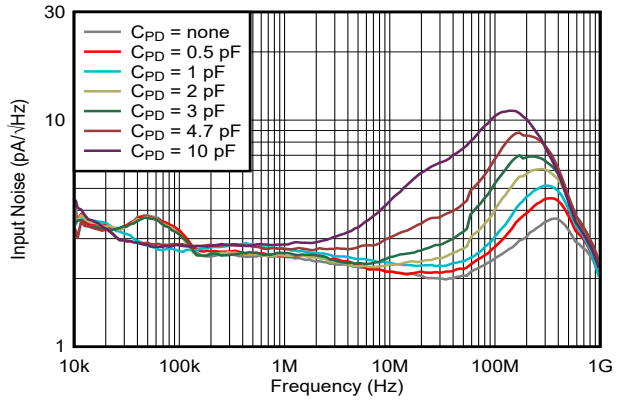

图 6-7. Input Noise Density vs Input Capacitance

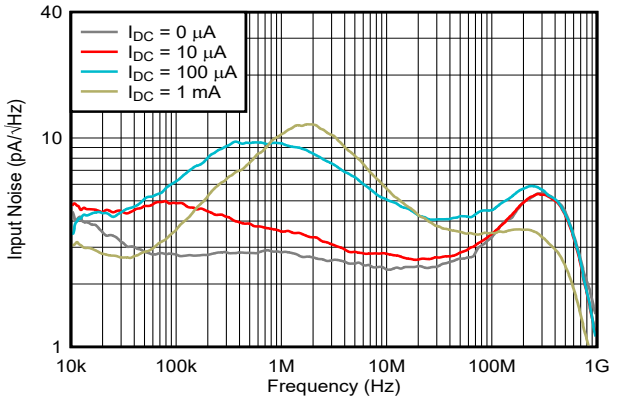

图 6-8. Input Noise Density vs Ambient Light DC Current

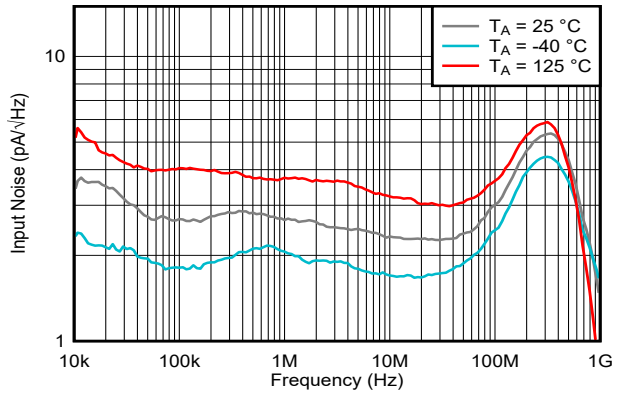

图 6-9. Input Noise Density vs Ambient Temperature

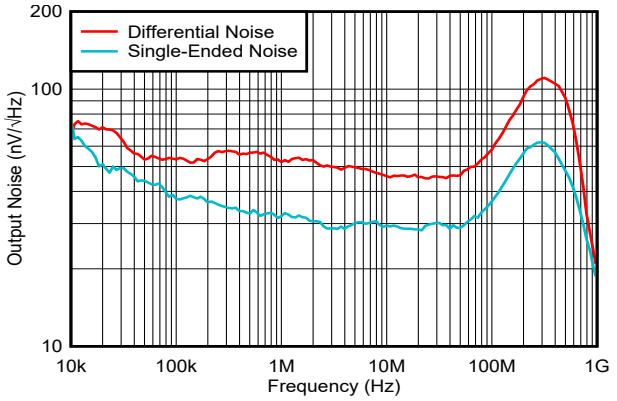

图 6-10. Output Noise Density vs Output Configuration

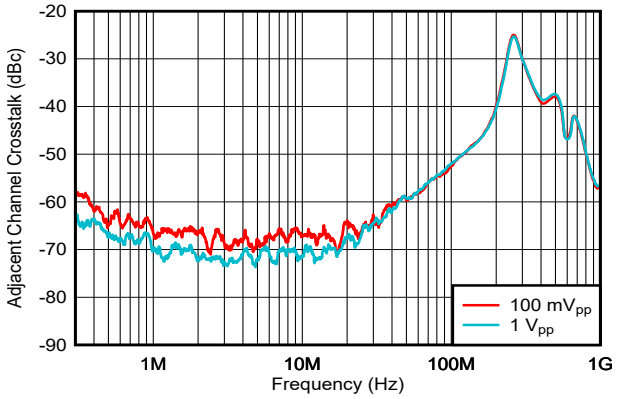

图 6-11. Adjacent Channel Crosstalk

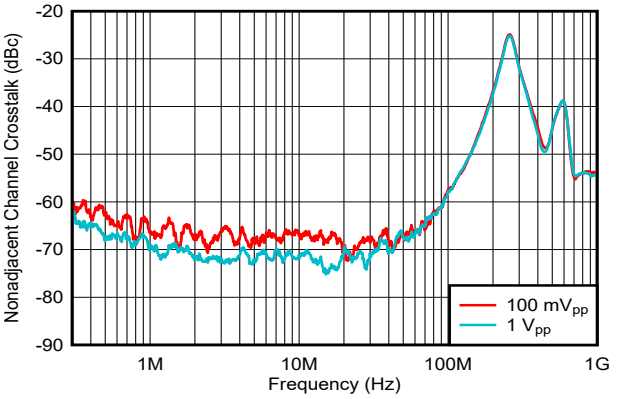

图 6-12. Non-Adjacent Channel Crosstalk

6.7 Typical Characteristics (continued)

At V_{DD} = 3.3 V, V_{OCM} = open, V_{OD} = 0 V, C_{PD} = 1 pF, $\overline{EN}$ = 0 V (enabled), $\overline{IDC_EN}$ = 3.3 V (disabled), R_L = 100 Ω (differential load between OUT+ and OUT –), and T_A = 25°C (unless otherwise noted)

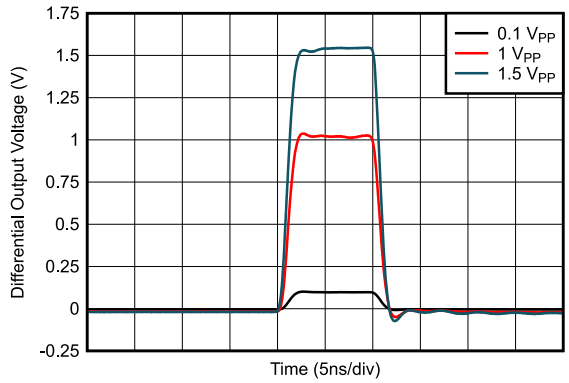

图 6-13. Pulse Response vs Output Swing

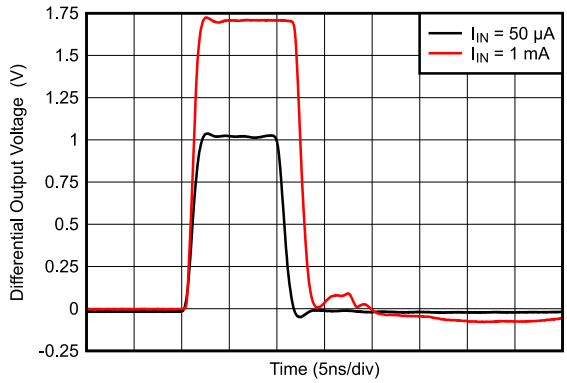

图 6-14. Overloaded Pulse Response

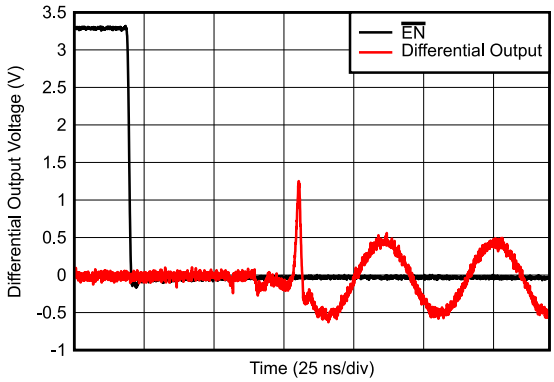

图 6-15. Turn-On Time

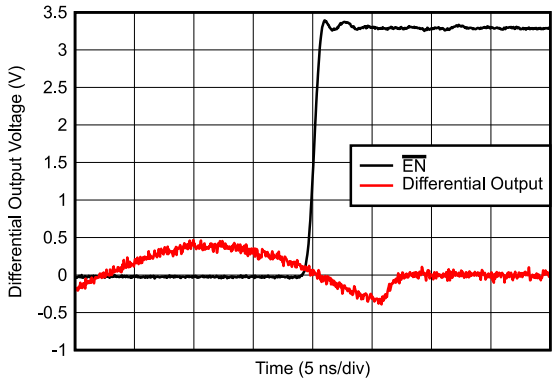

图 6-16. Turn-Off Time

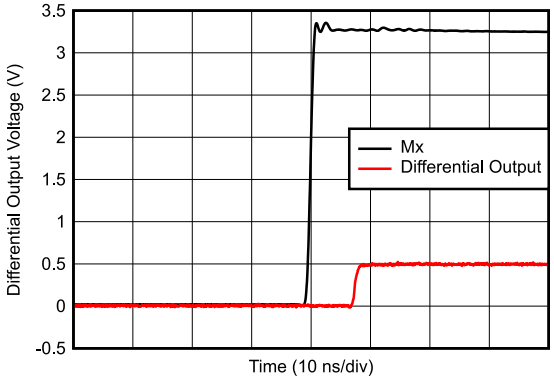

0 → 0.5V transition at VOUT (1% settling)

图 6-17. Channel Turn-On Response

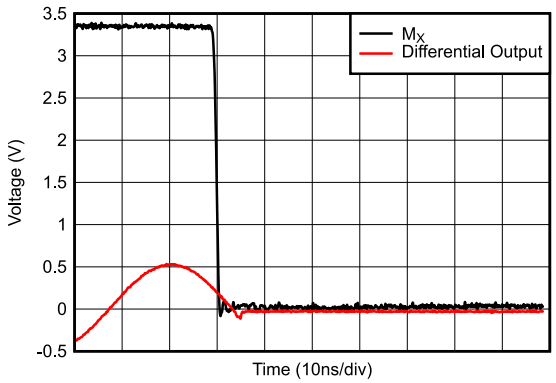

图 6-18. Channel Turn-Off Response

Copyright © 2022 Texas Instruments Incorporated

6.7 Typical Characteristics (continued)

At V_{DD} = 3.3 V, V_{OCM} = open, V_{OD} = 0 V, C_{PD} = 1 pF, $\overline{EN}$ = 0 V (enabled), $\overline{IDC_EN}$ = 3.3 V (disabled), R_L = 100 Ω (differential load between OUT+ and OUT –), and T_A = 25°C (unless otherwise noted)

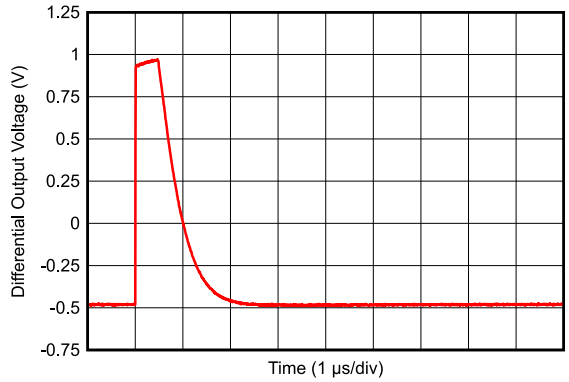

I_{DC_IN} = 0 µA → 100 µA, VOD = 0.5 V

图 6-19. Ambient Loop Cancellation Settling Time [1]

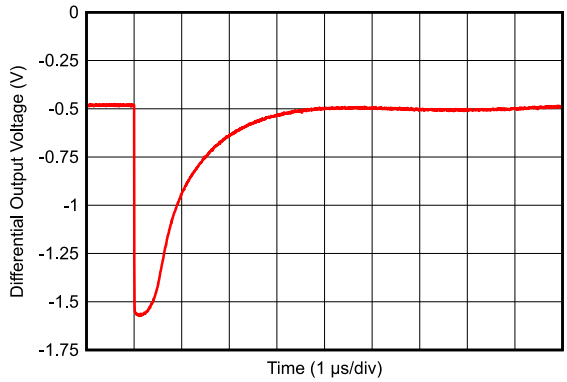

I_{DC_IN} = 100 µA → 0 µA, VOD = 0.5 V

图 6-20. Ambient Loop Cancellation Settling Time [1]

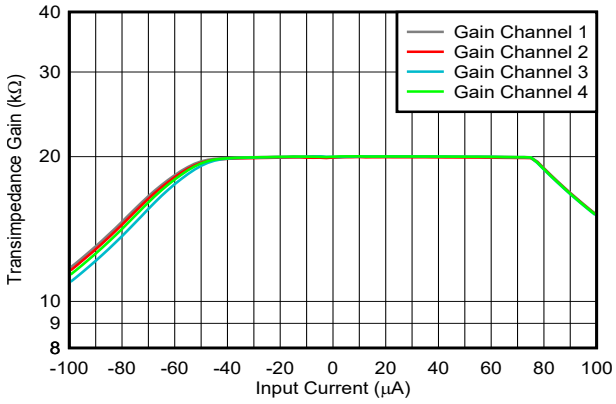

图 6-21. Transimpedance Gain vs Input Current

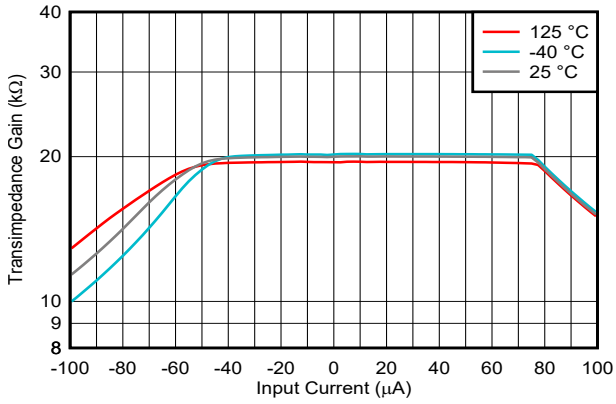

图 6-22. Transimpedance Gain vs Ambient Temperature

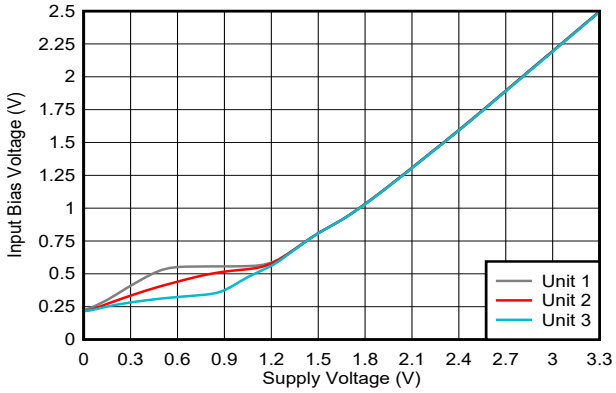

图 6-23. Input Bias Voltage vs Supply Voltage [2]

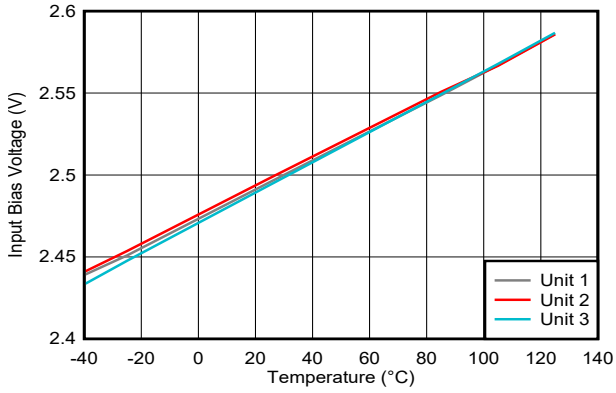

图 6-24. Input Bias Voltage vs Ambient Temperature [2]

1 Differential Output Voltage = (Vout+ - Vout-).
2 Typical units from different lots.

6.7 Typical Characteristics (continued)

At V_{DD} = 3.3 V, V_{OCM} = open, V_{OD} = 0 V, C_{PD} = 1 pF, $\overline{EN}$ = 0 V (enabled), $\overline{IDC_EN}$ = 3.3 V (disabled), R_L = 100 Ω (differential load between OUT+ and OUT –), and T_A = 25°C (unless otherwise noted)

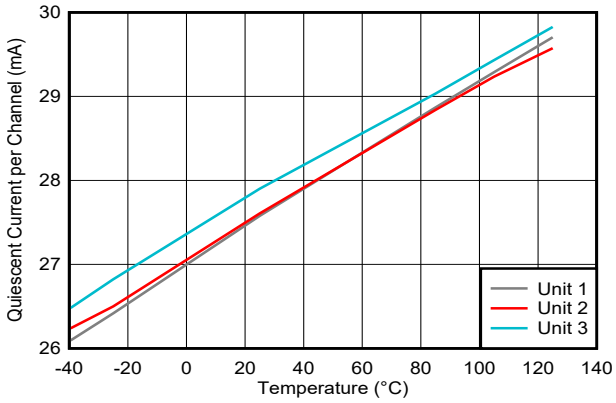

图 6-25. Quiescent Current (Per Channel) vs Ambient Temperature (2)

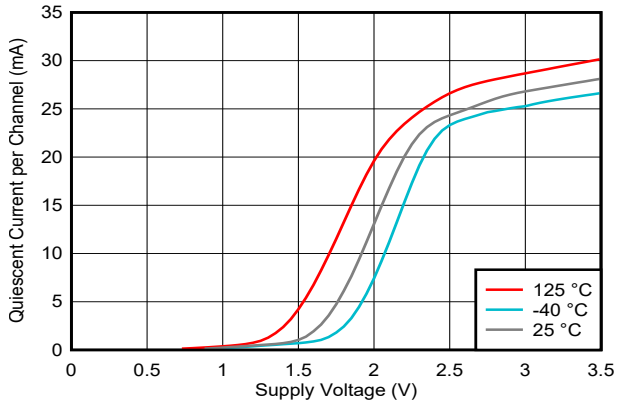

图 6-26. Quiescent Current (Per Channel) vs Supply Voltage

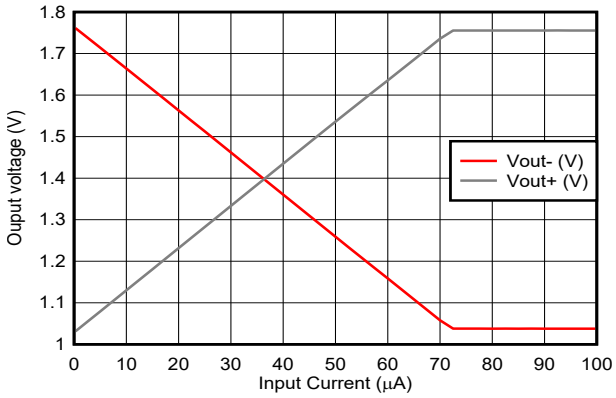

VOD = 0.75 V, VOCM = 1.4 V

图 6-27. High-Side Swing vs Input Current

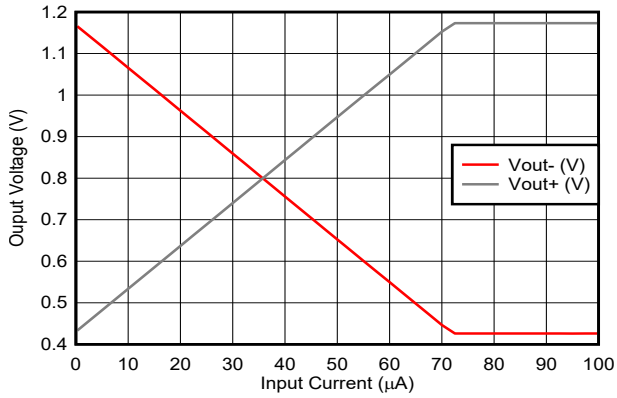

VOD = 0.75 V, VOCM = 0.8 V

图 6-28. Low-Side Swing vs Input Current

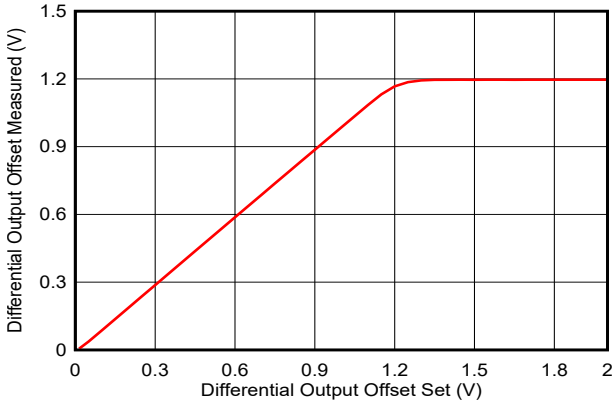

图 6-29. Differential Output Offset Gain

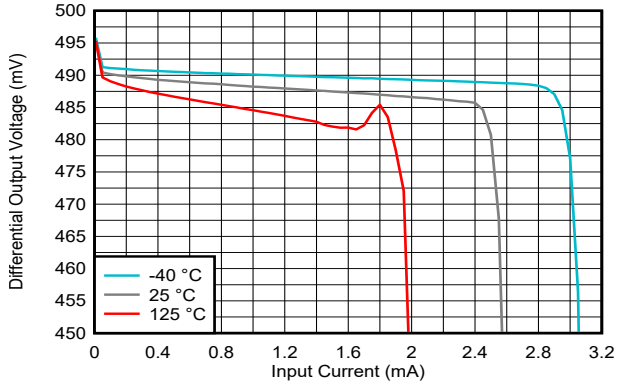

VOD = open

图 6-30. Ambient Light Cancellation Range vs Ambient Temperature

Copyright © 2022 Texas Instruments Incorporated

6.7 Typical Characteristics (continued)

At V_{DD} = 3.3 V, V_{OCM} = open, V_{OD} = 0 V, C_{PD} = 1 pF, $\overline{EN}$ = 0 V (enabled), $\overline{IDC_EN}$ = 3.3 V (disabled), R_L = 100 Ω (differential load between OUT+ and OUT –), and T_A = 25°C (unless otherwise noted)

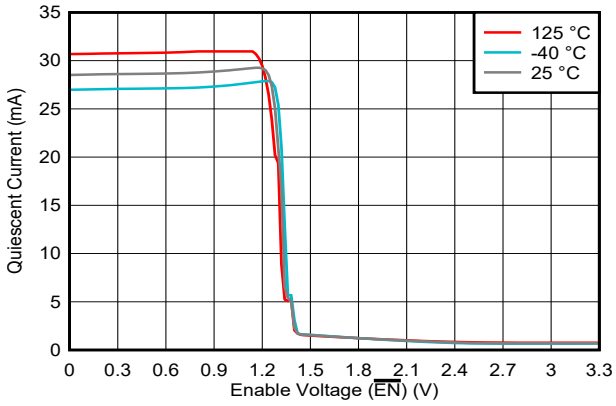

图 6-31. Logic Threshold vs Ambient Temperature

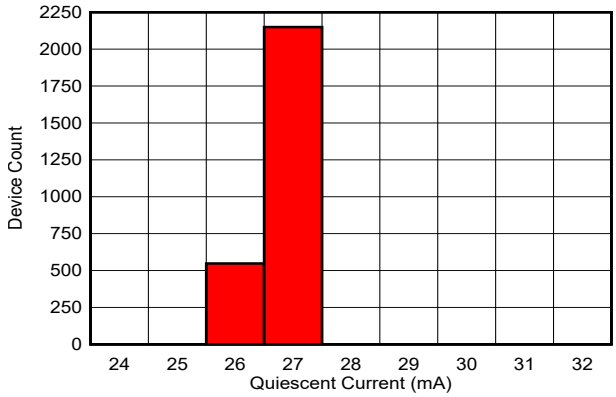

μ = 27.2 mA, σ = 0.27 mA

图 6-32. Quiescent Current Distribution

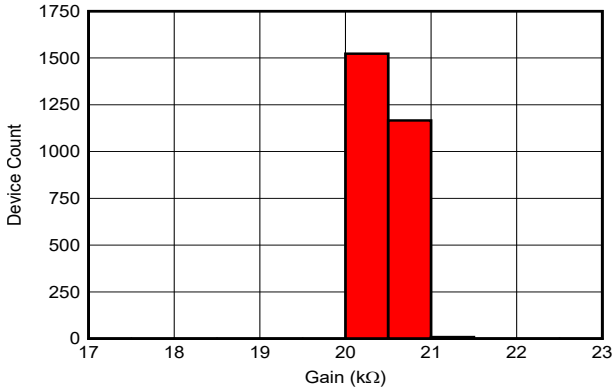

μ = 20.5 kΩ, σ = 0.2 kΩ

图 6-33. Transimpedance Gain Distribution

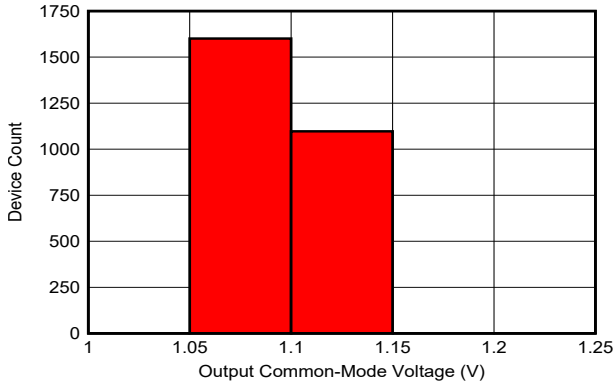

μ = 1.1 V, σ = 2 mV

图 6-34. Output Common-Mode Voltage (V_{OCM}) Distribution

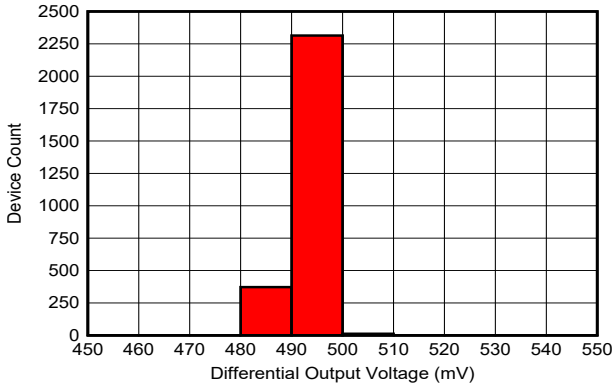

μ = 493 mV, σ = 2.8 mV

图 6-35. Differential Output Offset Voltage (V_{OD}) Distribution

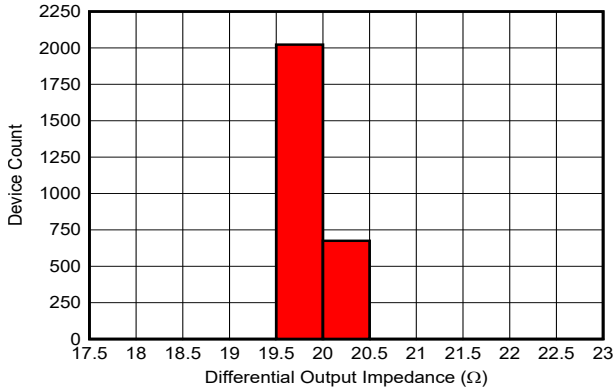

μ = 19.9 Ω , σ = 0.14 Ω, Device Enabled

图 6-36. Differential Output Impedance (Z_{OUT}) Distribution

7 Detailed Description

7.1 Overview

The LMH32404-Q1 is a quad-channel, differential output, high-speed transimpedance amplifier (TIA) geared towards light detection and ranging (LIDAR) and laser distance measurement systems. Each LMH32404-Q1 channel has integrated switches on the output to disconnect the differential output amplifier from the output pins. This enables the LMH32404-Q1 to be highly configurable in a multi-channel LIDAR system. The LMH32404-Q1 device is designed to work with photodiodes (PDs), for example avalanche photodiodes (APDs), connected in configurations that can source or sink the current. When the photodiode sinks the photocurrent (anode is biased to a negative voltage and cathode is tied to the amplifier input) the fast recovery clamp activates when the amplifier input is overloaded. When the photodiode sources the photocurrent (cathode is biased to a positive voltage and anode is tied to the amplifier input) a soft clamp activates when the amplifier input is overloaded. When the soft clamp activates the amplifier takes longer to recover. The recovery time depends on the level of input overload. The LMH32404-Q1 is offered in a space-saving 5-mm × 4-mm, 28-pin VQFN package and is rated over a temperature range from –40°C to +125°C.

Copyright © 2022 Texas Instruments Incorporated

7.2 Functional Block Diagram

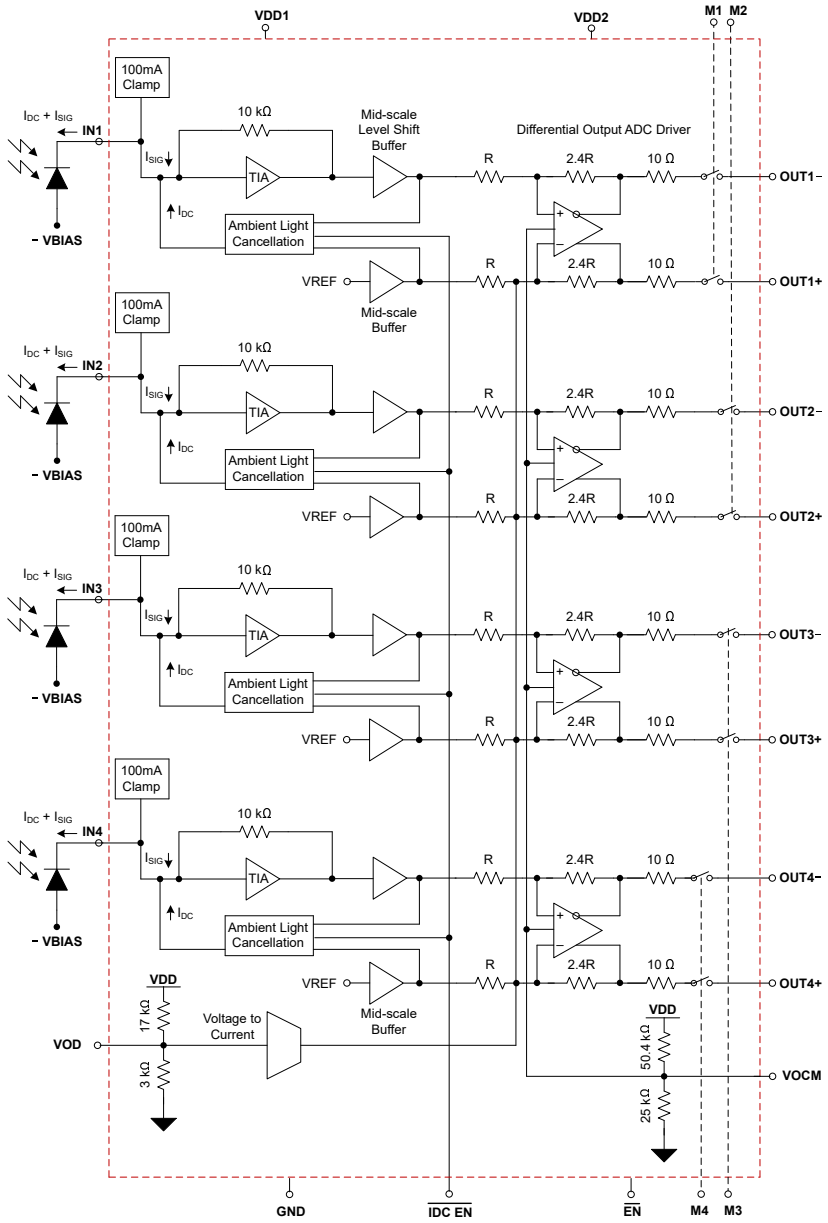

7.3 Feature Description

7.3.1 Clamping and Input Protection

The LMH32404-Q1 device is optimized to work with photodiodes (PD) configurations that can source or sink current; however, the LMH32404-Q1 is optimized for a sinking current configuration. It is assumed that the LMH32404-Q1 device is being used with a PD that is configured with its cathode tied to the amplifier input and the anode tied to a negative supply voltage, unless stated otherwise.

The LMH32404-Q1 features two internal clamps, a fast recovery clamp and a soft clamp. The fast recovery clamp is the active clamp when the photodiode is sinking a photocurrent. The soft clamp is the active clamp when the photodiode is sourcing a photocurrent. Stray reflections from nearby objects with high reflectivity can produce large output current pulses from the PD. The linear input range of the LMH32404-Q1 is approximately 65 µA. Input currents in excess of the linear current range will cause the internal nodes of the amplifier to saturate, which increases the amplifier recovery time. The end result broadens the output pulse, which leads to blind zones.

To protect against this condition, the LMH32404-Q1 features an integrated fast recovery clamp that absorbs and diverts the excess current to the positive supply (V_{DD1}) when the amplifier detects its nodes entering a saturated condition. The integrated clamp minimizes the pulse extension to less than a few nanoseconds for input pulses up to 100 mA. The power-supply pins (VDD1 and VDD2) must have their own bypass capacitors to prevent large input pulses from affecting the differential output stage. The clamp circuitry is active when the amplifier is in standby mode and low-power mode, thereby protecting the TIA input.

7.3.2 ESD Protection

All LMH32404-Q1 IO pins (excluding VDD1, VDD2, and GND) have an internal electrostatic discharge (ESD) protection diode to the positive and negative supply rails to protect the amplifier from ESD events.

7.3.3 Differential Output Stage

Each channel of the LMH32404-Q1 has a differential output stage that performs two functions that are common across all differential amplifiers. This stage does the following:

1. Converts the single-ended output from the TIA stage to a differential output.
2. Performs a common-mode output shift to match the specified ADC input common-mode voltage.

The VOD pin is functional only when the LMH32404-Q1 device is used with a PD that sinks the photocurrent. Set VOD = 0 V when the LMH32404-Q1 device is interfaced with a PD that sources the photocurrent. The differential output stage has two 10-Ω series resistors on its output to isolate the amplifier output stage transistors from the package bond-wire inductance and printed circuit board (PCB) capacitance. The net gain of the LMH32404-Q1 (TIA plus the output stage) is 20 kΩ per channel when driving an external 100-Ω resistor. When the external load resistor is increased above 100 Ω, the effective gain from the IN pin to the differential output pin increases. Consequently, when the external load resistor is decreased to less than 100 Ω, the effective gain from the IN pin to the differential output pin decreases as a result of the larger voltage drop across the two internal 10-Ω resistors. The effective TIA gain is 24 kΩ when there is no load resistor between the OUT+ and OUT– pins.

The output common-mode voltage of the LMH32404-Q1 can be set externally through the VOCM pin. A resistor divider internal to the amplifier, between VDD2 and ground sets the default voltage to 1.1 V. The internal resistors generate common-mode noise that is typically rejected by the CMRR of the subsequent ADC stage. To maximize the amplifier SNR, place an external noise bypass capacitor to ground on the VOCM pin. In single-ended signal chains, such as ToF systems that use time-to-digital converters (TDCs), only a single output per channel of the LMH32404-Q1 is needed. In such situations, terminate the unused differential output in the same manner as the used output to maintain balance and symmetry. The signal swing of the single-ended output is half the available differential output swing. Additionally, the common-mode noise of the output stage, which is typically rejected by the differential input ADC, is now added to the total noise, further degrading SNR.

Copyright © 2022 Texas Instruments Incorporated

The output stage of the LMH32404-Q1 has an additional VOD input that sets the differential output between OUT – and OUT+. 图 7-1 shows how each output pin of the LMH32404-Q1 is at the voltage set by the VOCM pin (default = 1.1 V) when the photodiode output current is zero and the VOD input is set to 0 V. When the VOD pin is driven to a voltage of *X* volts, the two output pins are separated by *X* volts when the photodiode current is zero. The average voltage is still equal to VOCM. For example, 图 7-2 shows how if VOCM is set to 1.1 V and VOD is set to 0.4 V, then OUT – = 1.1 V + 0.2 V = 1.3 V and OUT+ = 1.1 V – 0.2 V = 0.9 V.

The VOD output offset feature is included in the LMH32404-Q1 because the output current of a photodiode is unipolar. Depending on the reverse bias configuration, a photodiode can either sink or source current, but cannot do both at the same time. With the anode connected to a negative bias and the cathode connected to the TIA stage input, the photodiode can only sink current, which implies that the TIA stage output swings in a positive direction above its default input bias voltage. Subsequently, OUT – only swings below VOCM and OUT+ only swings above VOCM. 图 7-1 shows how the with VOD = 0 V, the LMH32404-Q1 only uses half its output swing range ($V_{OUT} = V_{OUT+} - V_{OUT-}$), because one output never swings below VOCM and the other output never goes above VOCM. The signal dynamic range in this case is 0.4 V_{PP} – 0 V = 0.4 V_{PP}.

图 7-2 shows how the VOD pin voltage allows OUT – to be level-shifted above VOCM, and OUT+ to be level-shifted below VOCM to maximize the output swing capabilities of the amplifier. The signal dynamic range in this case is 0.4 V_{PP} − (-0.4 V_{PP}) = 0.8 V_{PP}.

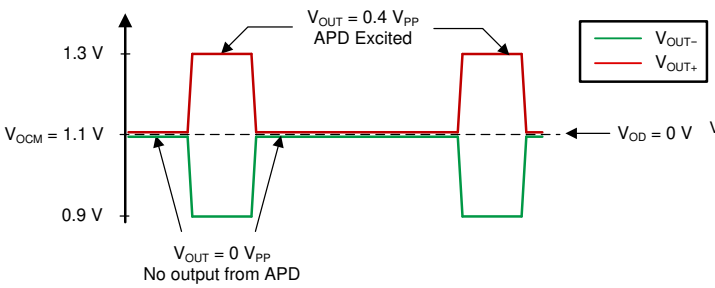

图 7-1. Single-Ended Outputs With VOD = 0 V

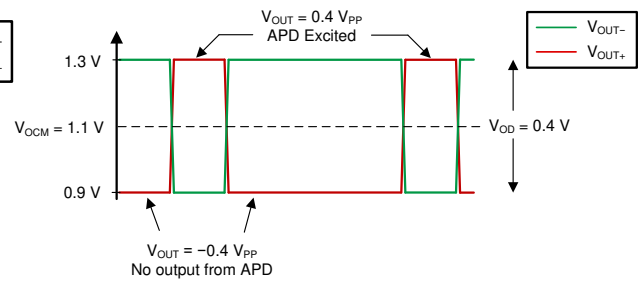

图 7-2. Single-Ended Outputs With VOD = 0.4 V

When the LMH32404-Q1 drives a 100-Ω load, the voltage set at the VOD pin is equal to the differential output offset ($V_{OUT} = V_{OUT+} - V_{OUT-}$) when the input signal current is zero. Use 方程式 1 to calculate the differential output offset under other load conditions.

$$V_{OD} = 1.2 \times VOD \times \frac{R_L}{\left(R_L + 20\ \Omega\right)} \tag{1}$$

where

- VOD = Voltage applied at pin 10
- $V_{OD} = (V_{OUT-} - V_{OUT+})$
- R_L = External load resistance

7.4 Device Functional Modes

7.4.1 Ambient Light Cancellation (ALC) Mode

The LMH32404-Q1 has an integrated DC cancellation loop that cancels and voltage offsets from incidental ambient light. The ALC mode only works when the PD is sinking the photocurrent. The DC cancellation loop is enabled by setting $\overline{\text{IDC_EN}}$ low. Incident ambient light on a photodiode produces a DC current resulting in an offset voltage at the output of the TIA stage.

If the photodiode produces a DC output current resulting from ambient light, the output of the level-shift buffer stage is offset from the reference voltage V_{REF}. The ALC loop detects this offset and produces an opposing DC current to compensate for the differential offset voltage at its input. The loop has a high-pass cutoff frequency of 400 kHz. The ambient light cancellation loop is disabled when the amplifier is placed in low-power mode.

The shot noise current introduced by the DC cancellation loop increases the overall amplifier noise; so, if the ambient light level is negligible, then disable the loop to improve SNR. The cancellation loop helps save PCB space and system costs by eliminating the need for external AC coupling passive components. Additionally, the extra trace inductance and PCB capacitance introduced by using external AC coupling components degrades the LMH32404-Q1 dynamic performance.

The ambient light cancellation loop is active (depending on $\overline{\text{IDC_EN}}$ configuration) when a channel(s) is in standby mode. The ambient light cancellation loop is disabled when the amplifier is placed in low-power mode. When the LMH32404-Q1 is brought out of low-power operation the ambient light cancellation loop requires several time constants to settle. The time constant is based on the 400-kHz cutoff frequency of the loop. When in standby mode, the ALC loop is still active depending on IDC_EN configuration.

7.4.2 Channel Multiplexer Mode

The LMH32404-Q1 is a highly integrated transimpedance amplifier device with four independent channels. Each channel has its own single-ended input, differential output stage and multiplexing switch. The integrated switch can be used to disconnect the differential output amplifier from the output pin, thereby enabling high-impedance output for the respective channel.

图 7-4 shows how this device feature can further save board space and cost by eliminating the need for discrete high-speed multiplexer in a system that consists of several amplifier channels multiplexed to a single ADC channel. When switching between different channels, the LMH32404-Q1 has a transition time of 10 ns (typical). The disabled channel outputs are high-impedance so multiple amplifier outputs can be directly shorted to each other. If one channel is enabled and other channels are disabled, the disabled channels will not load the enabled channel. This further makes the LMH32404-Q1 easy to use in photodiode array applications.

Set Mx (M1, M2, M3, or M4) high for the corresponding channel to be enabled and output switches closed. Set Mx to logic low (default state) for the corresponding channel to be disabled (standby mode) and output switches open. When the channel is in its standby power mode, the clamp circuitry is still active thereby protecting the TIA input. Also, when in standby mode, the ALC loop is still active depending on $\overline{\text{IDC_EN}}$ configuration.

Copyright © 2022 Texas Instruments Incorporated

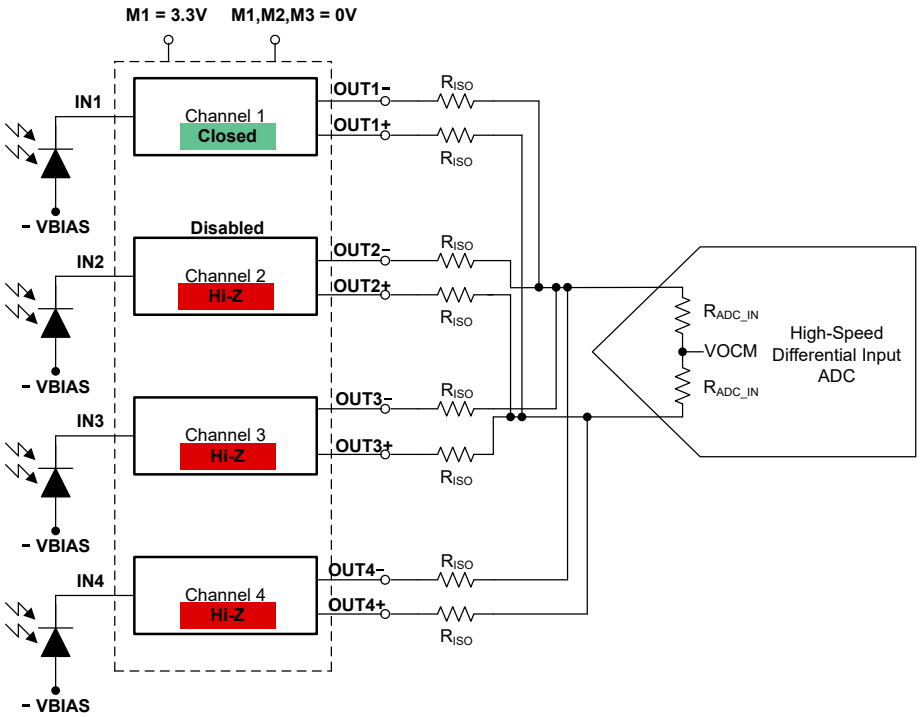

图 7-3. Configuring LMH32404-Q1 in Channel Multiplexer Mode to Drive a Single ADC

7.4.3 Low-Power Mode

The LMH32404-Q1 can be placed in low-power mode by setting $\overline{EN}$ high, which helps in saving system power. Enabling low-power mode puts the outputs of the internal amplifiers in the LMH32404-Q1, including the differential outputs, in a high-impedance state.

If a system consists of high number of amplifier channels multiplexed to a few ADC channels. 图 7-4 shows how this device feature can further save board space and cost by eliminating the need for a discrete high-speed multiplexer. The disabled LMH32404-Q1 outputs are high-impedance so multiple LMH32404-Q1 device outputs can be directly shorted to each other. If one LMH32404-Q1 device is enabled and others are disabled, the disabled devices will not load the enabled device. This further makes the LMH32404-Q1 easy to use in photodiode array applications.

When the amplifier is in its low-power mode, the clamp circuitry is still active thereby protecting the TIA input. The ambient light cancellation loop is disabled when the amplifier is placed in low-power mode. When the LMH32404-Q1 is brought out of low-power operation the ambient light cancellation loop requires several time constants to settle. The time constant is based on the 400-kHz cutoff frequency of the loop.

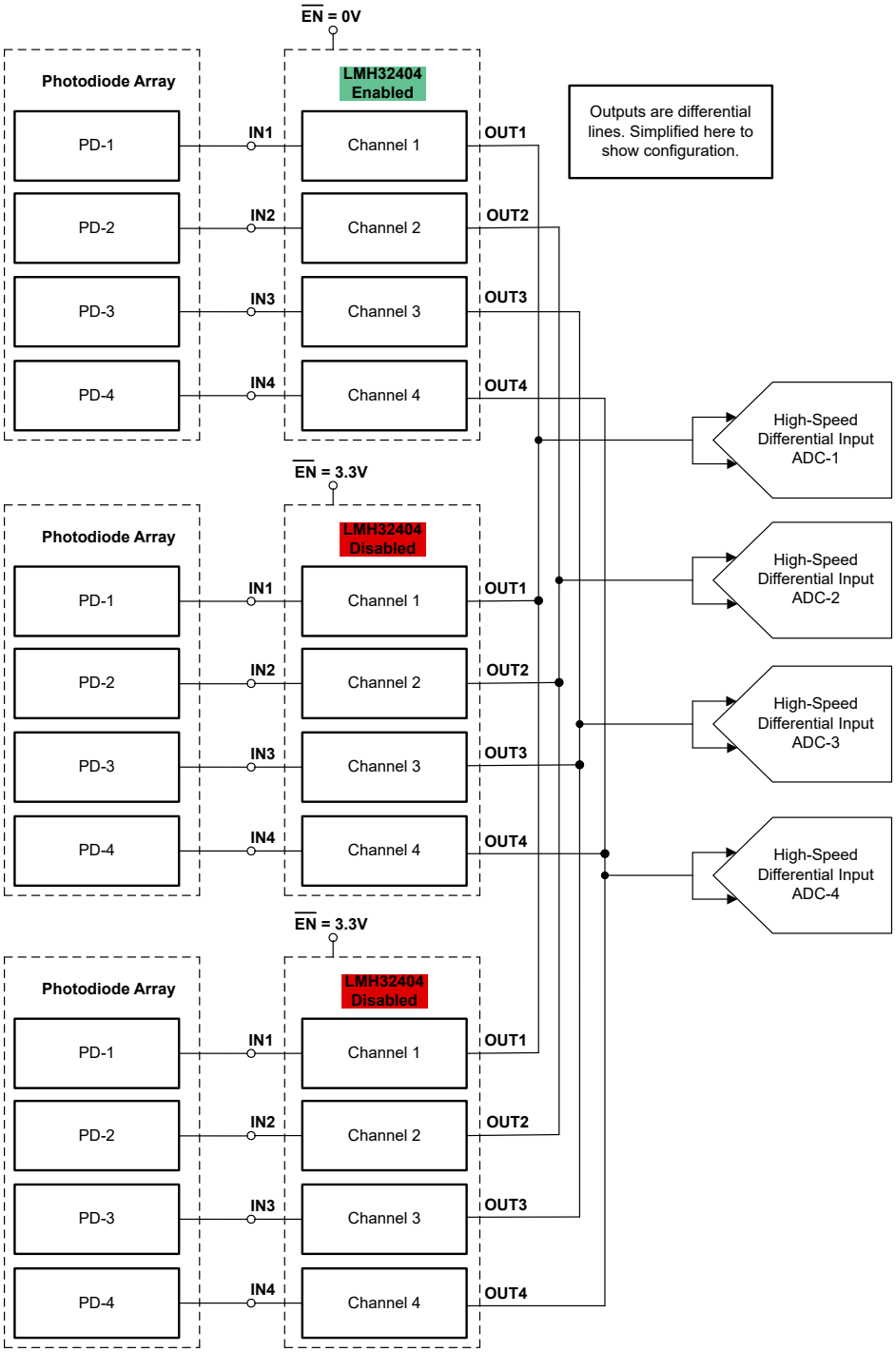

图 7-4. Configuring Three LMH32404-Q1 Devices to Drive Four ADC Channels

Copyright © 2022 Texas Instruments Incorporated

8 Application and Implementation

Note

以下应用部分中的信息不属于 TI 器件规格的范围，TI 不担保其准确性和完整性。TI 的客 户应负责确定器件是否适用于其应用。客户应验证并测试其设计，以确保系统功能。

8.1 Application Information

Each differential output pair of the LMH32404-Q1 can directly drive a high-speed differential input ADC. 图 8-1 shows how the effective signal the effective signal gain between the TIA input and the ADC input is 20 kΩ when driving an ADC with a 100-Ω differential input impedance (R_{ADC_IN} = 50 Ω). 方程式 2 gives the effective signal gain between the TIA input and the ADC input when driving an ADC with any other value of differential input impedance ($R_{ADC_IN} \neq 50\ \Omega$).

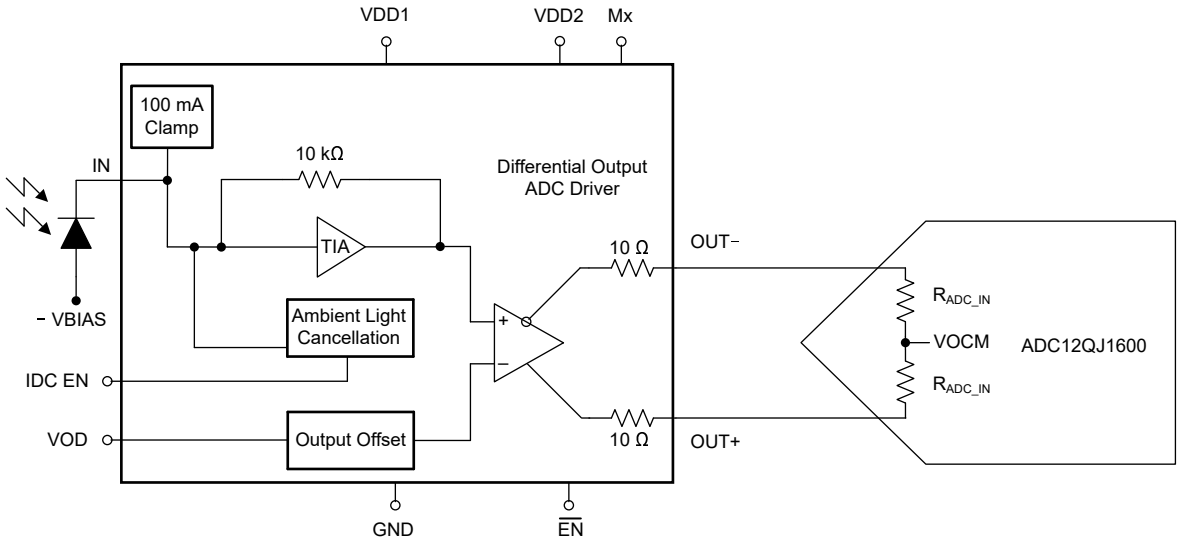

图 8-1. LMH32404-Q1 (Single Channel) to ADC Interface

$$A_V = 20\ k\Omega \times 1.2 \times \frac{2 \times R_{ADC_IN}}{\left(2 \times R_{ADC_IN} + 20\ \Omega\right)} \tag{2}$$

where

- A_V = Differential gain from the TIA input to the ADC input
- R_{ADC_IN} = Input resistance of the ADC

图 8-2 shows that in some designs a matching resistor network can be inserted between the LMH32404-Q1 output and the ADC inputs. 方程式 3 gives the effective gain from the TIA input to the ADC input when using a matching resistor network.

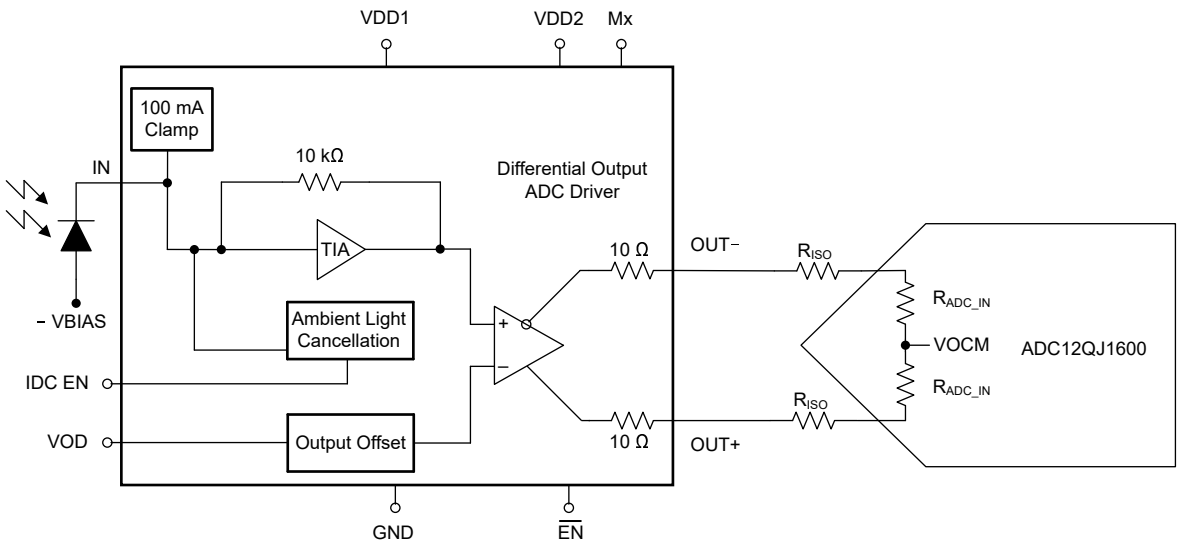

图 8-2. LMH32404-Q1 (Single Channel) to ADC Interface With a Matching Resistor Network

$$A_V = 20\ k\Omega \times 1.2 \times \frac{2 \times R_{ADC_IN}}{\left(2 \times R_{ADC_IN} + 2 \times R_{ISO} + 20\Omega\right)} \tag{3}$$

where

- A_V = Gain from the TIA input to the ADC input
- R_{ADC_IN} = Differential input resistance of the ADC
- R_{ISO} = Series resistance between the TIA and ADC

方程式 4 gives the voltage to be applied at the VOD pin (pin 10) if a certain differential offset voltage (V_{OD}) is needed at the ADC input for the circuit in 图 8-2.

$$VOD = V_{OD} \times \left(\frac{1}{1.2}\right) \times \frac{\left(2 \times R_{ADC_IN} + 2 \times R_{ISO} + 20\ \Omega\right)}{\left(2 \times R_{ADC_IN}\right)} \tag{4}$$

where

- VOD = Voltage applied at pin 10
- V_{OD} = Desired differential offset voltage at the ADC input
- R_{ADC_IN} = Differential input resistance of the ADC
- R_{ISO} = Series resistance between the TIA and ADC

Copyright © 2022 Texas Instruments Incorporated

8.2 Typical Application

8.2.1 Standard TIA Application

图 8-3 and 图 8-4 shows the circuit used to test the LMH32404-Q1 with a voltage source.

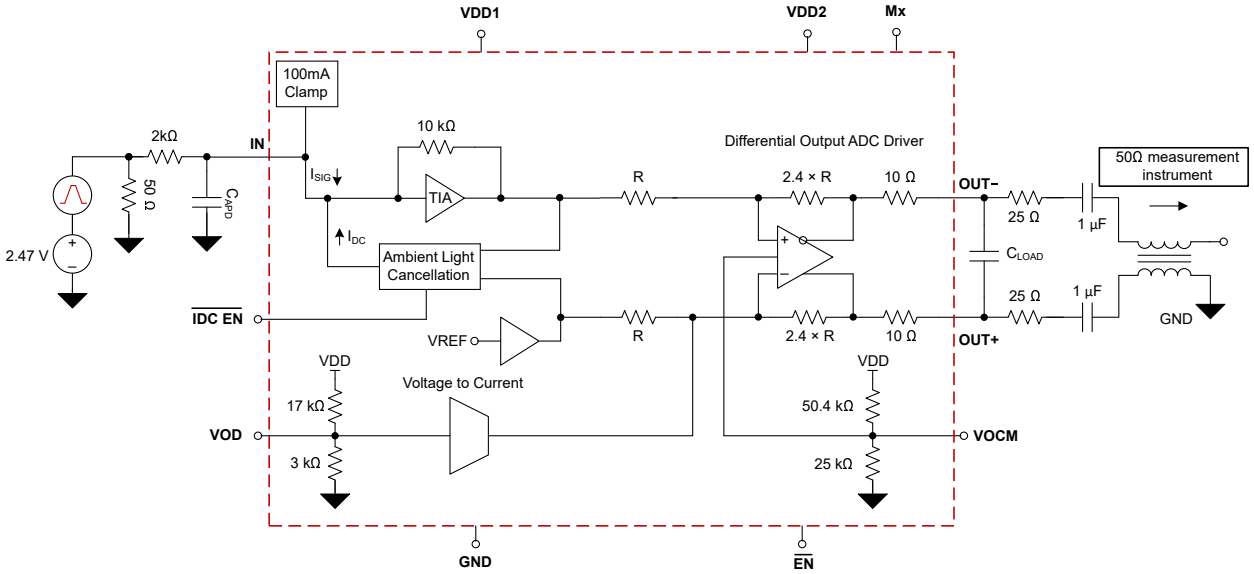

图 8-3. LMH32404-Q1 Single Channel Test Circuit for Single-Ended Measurement

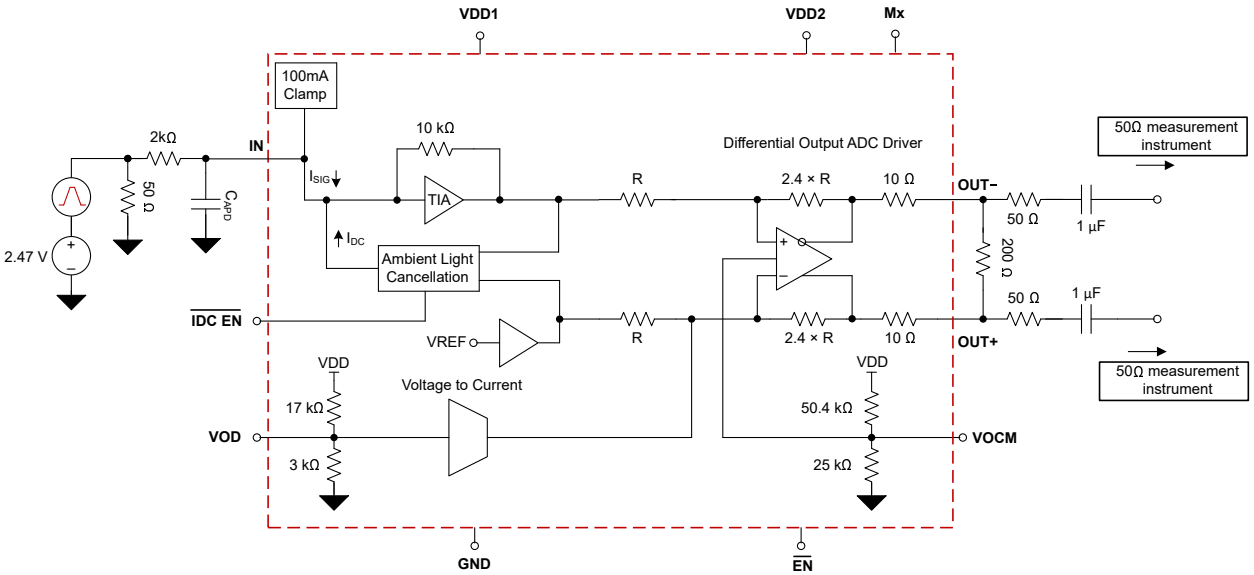

图 8-4. LMH32404-Q1 Single Channel Test Circuit for Differential Measurement

8.2.1.1 Design Requirements

The objective is to design a low-noise, wideband differential output transimpedance amplifier. The design requirements are:

- Amplifier supply voltage: 3.3 V
- Transimpedance gain: 20 kΩ
- Photodiode capacitance: C_{APD} = 1 pF
- Target bandwidth: > 300 MHz
- Multiple channels for array applications

8.2.1.2 Detailed Design Procedure

图 8-3 and 图 8-4 shows the LMH32404-Q1 test circuit used to measure its bandwidth, noise and transient response. The voltage source is DC biased close to the input bias voltage of the LMH32404-Q1. The LMH32404-Q1 internal design is optimized to only source current out of the input pin (INx). When testing the LMH32404-Q1 with a network analyzer or sinusoidal source, set the DC bias such that sum of the input AC and DC component does not result in a sourcing current into the amplifier input. Only use the LMH32404-Q1 with avalanche photodiodes (APDs) that sink current. An anode-biased APD satisfies this requirement.

图 8-5 shows the measured results for bandwidth of LMH32404-Q1 for all four channels.

图 8-6 shows the output noise spectral density of the LMH32404-Q1 with C_{APD} = 1 pF and no photodiode capacitance.

图 8-7 shows the turn-on time of the LMH32404-Q1 channel when the Mx pin is toggled from logic low to high. When the amplifier is off, the output is in a high-impedance state. When the amplifier turns on, the output settles and starts tracking the input within a few nanoseconds.

图 8-8 shows the turn-off time of the LMH32404-Q1 channel when the Mx pin is toggled from logic high to low. When the amplifier is off, the output is in a high-impedance state.

8.2.1.3 Application Curves

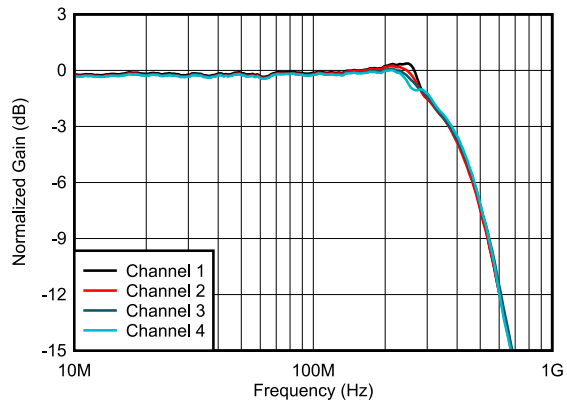

图 8-5. Transimpedance Bandwidth

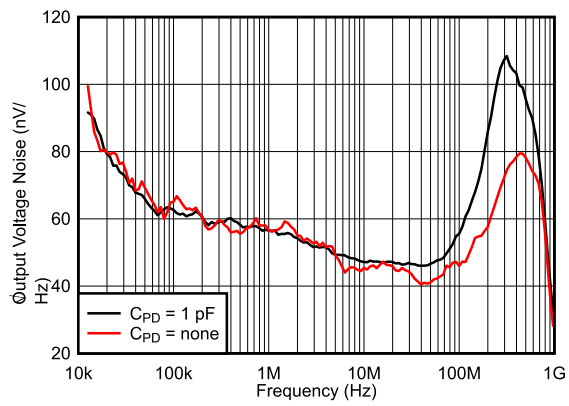

图 8-6. Output Noise Spectral Density

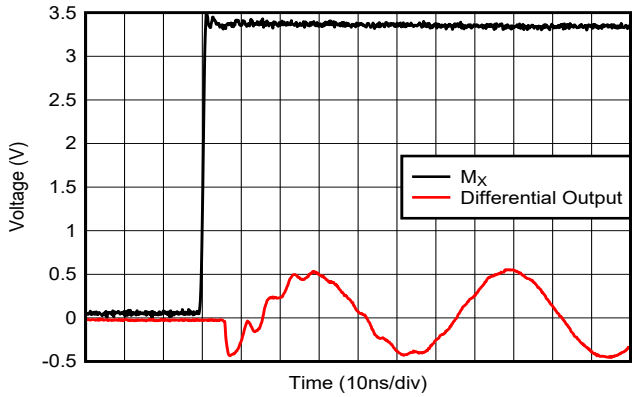

图 8-7. Channel Turn-On Response

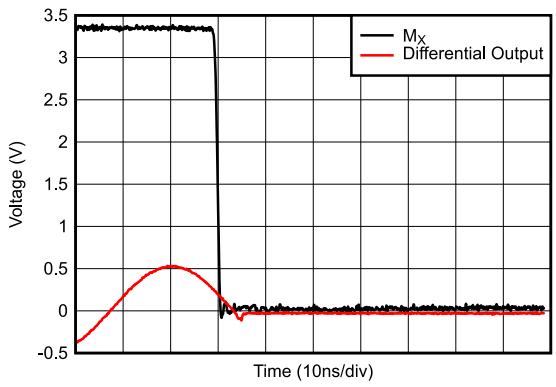

图 8-8. Channel Turn-Off Response

Copyright © 2022 Texas Instruments Incorporated

8.2.2 Increase Channel Density for Optical Front-End Systems

Modern LiDAR systems are moving towards solid state configurations with multi-channel photodiode arrays. For optical front-end designs it is impractical to have single transimpedance amplifiers (TIA) connected to each diode output along with additional multiplexers or other switching solutions to connect to the digitizer. This approach causes increased solution size, complexity and signal degradation.

The LMH32404-Q1 resolves this problem in two ways, by providing higher integration within the device and by allowing user configured output multiplexing for independent output control.

图 8-9 shows a comparison of a non-integrated front end using individual amplifiers, a multiplexer, and fully-differential amplifier (FDA) to connect to the differential input ADC. In comparison, the front end using the LMH32404-Q1 is able to connect four channels per amplifier to each ADC or set of ADC differential inputs. 图 8-9 shows how the LMH32404-Q1 improves solution size and system complexity compared to a non-integrated solution. With the additional features like input current clamps and ambient light cancellation, LMH32404-Q1 also improves system design and eliminates need for additional circuitry.

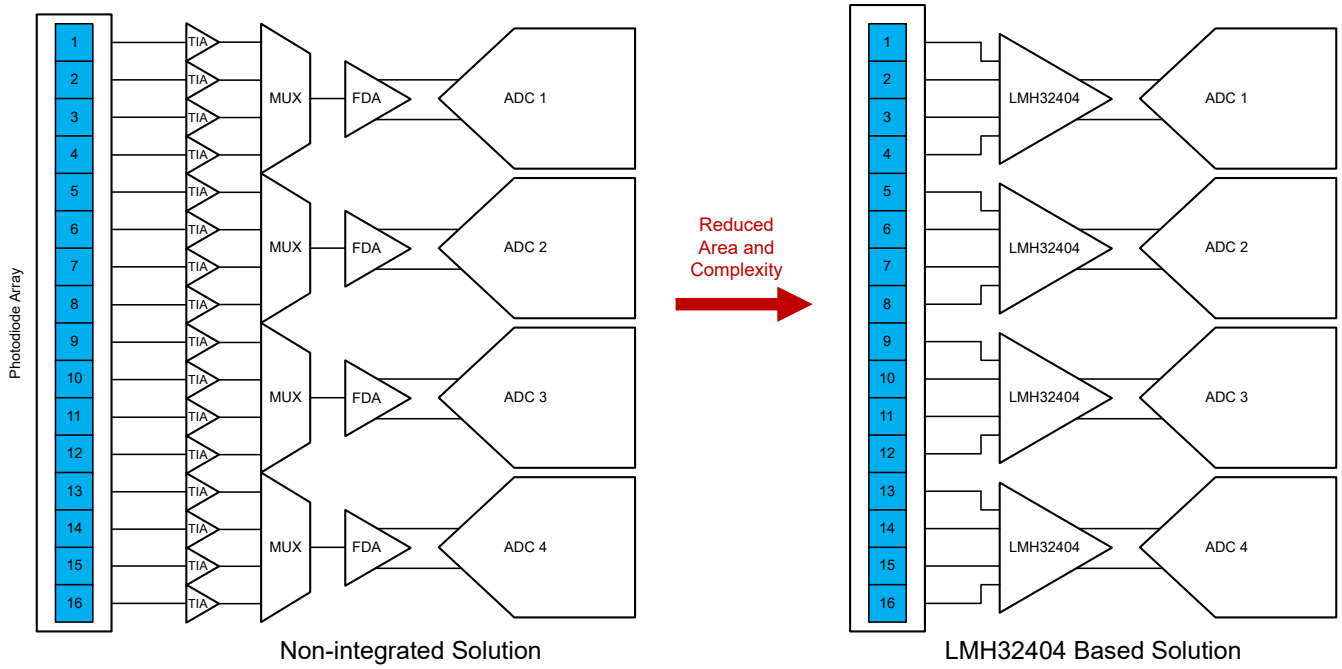

图 8-9. Solution Size Comparison

LMH32404-Q1 is a quad-channel device and each channel has an independent differential output stage and multiplexing switch. 图 8-10 shows two common output configurations. In a four-to-four configuration the LMH32404-Q1 operates with no output multiplexing with each input and corresponding differential output active. This configuration is useful when the user needs to be able to capture data from four optical sensors simultaneously. In a four-to-one configuration, the LMH32404-Q1 internally multiplexes all four differential outputs into a single differential output. The LMH32404-Q1 outputs can be configured in any permutation such as one channel operating in one-to-one mode with the other three channels multiplexed in a three-to-one configuration. This independent control and multiplexing feature significantly increases channel density for systems that do not need to record all inputs simultaneously.

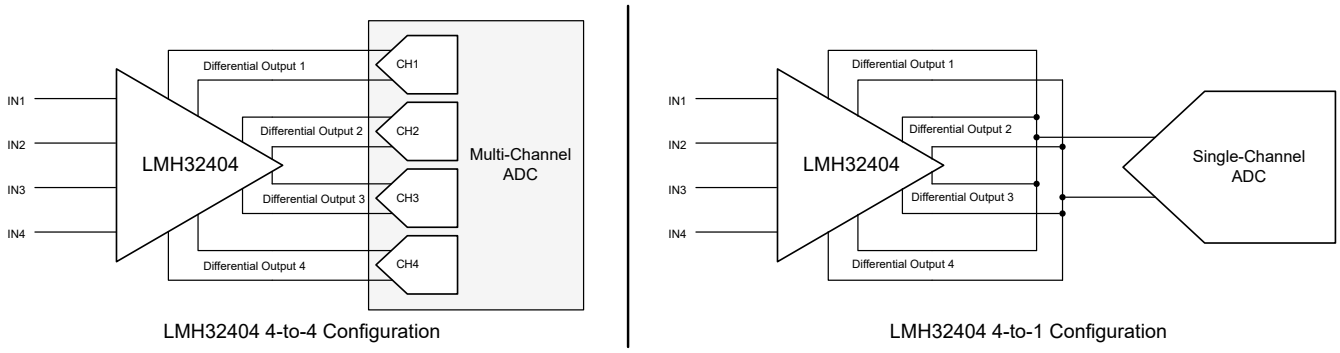

图 8-10. LMH32404 Multiplexing Configuration Examples

To show the front-end design integration and multiplexing capability, the LMH32404-Q1 performance was measured with the ADC12QJ1600-Q1 quad channel analog to digital converter. 图 8-11 shows the data measured from the ADC12QJ1600-Q1 using a 10ns electrical input pulse on a single channel of the LMH32404-Q1. These pulses are similar to outputs seen in a typical LiDAR application. 图 8-12 shows the data from the ADC12QJ1600- Q1 when the LMH32404-Q1 outputs multiplex between different channels. The initial output shows a 10ns duration pulse train on channel 1, followed by a 20 MHz sinusoidal signal on channel 2 and then the output with all channels turned off but the input signals still present. Details on these measurements and application are discussed in the application brief, How to Increase the Channel Density of LiDAR Systems with the 4-Channel LMH32404 Transimpedance Amplifier.

8.2.2.1 Application Curves

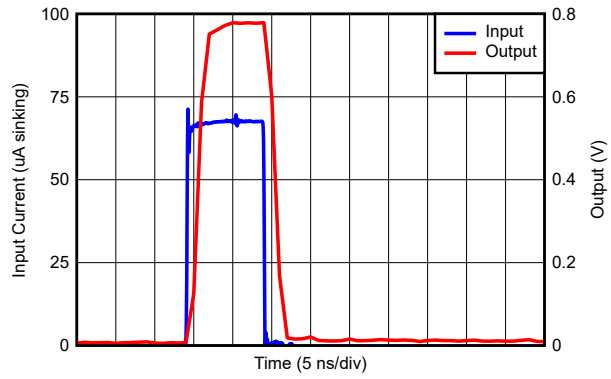

图 8-11. 10 ns Pulse Electrical Input

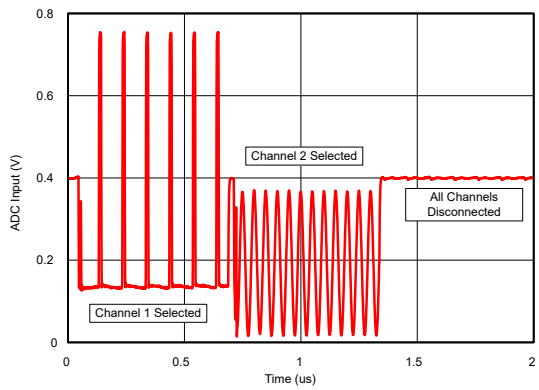

图 8-12. Multiplexed Channel Switching

9 Power Supply Recommendations

The LMH32404-Q1 operates on 3.3-V supplies. The VDD1 and VDD2 pins must always be driven from the same supply source and individually bypassed. Use multiple bypass capacitors in parallel, because a low power-supply source impedance must be maintained across frequency. Place the bypass capacitors as close to the supply pins as possible. Place the smallest capacitor on the same side of the PCB as the LMH32404-Q1. Placing the larger valued bypass capacitors on the same side of the PCB is preferable as well; if there are space constraints however, the capacitors can be moved to the opposite side of the PCB using multiple vias to reduce the series inductance resulting from the vias. The LMH32404-Q1 can be run on bipolar supplies by connecting pins 11 and 26 to the negative supply. The thermal pad must always be connected to the most negative supply. The digital pin threshold voltages must be appropriately level shifted as they are referred to voltages at pins 11 and 26.

Copyright © 2022 Texas Instruments Incorporated

10 Layout

10.1 Layout Guidelines

Achieving optimum performance with a high-frequency amplifier such as the LMH32404-Q1 requires careful attention to board layout parasitics and external component types. Recommendations that optimize performance include:

- **Minimize parasitic capacitance from the signal I/O pins to ac ground.** Parasitic capacitance on the output pins can cause instability, whereas parasitic capacitance on the input pin reduces the amplifier bandwidth. Cut out the power and ground traces under the signal input and output pins to reduce unwanted capacitance. Otherwise, ground and power planes must be unbroken elsewhere on the board.
- **Minimize the distance from the power-supply pins to high-frequency bypass capacitors.** Use low inductance ceramic capacitors as decoupling capacitors with voltage ratings at least three times greater than the amplifiers maximum power supplies. Place a combination of 100 pf (or higher) and 33 nF (or higher) capacitors on the same side as the DUT. If space constraints force the larger value bypass capacitors to be placed on the opposite side of the PCB, use multiple vias on the supply and ground side of the capacitors. This configuration makes sure that there is a low-impedance path to the amplifiers power-supply pins across the amplifiers gain bandwidth specification. Avoid narrow power and ground traces to minimize inductance between the pins and the decoupling capacitors. Larger (2.2-µF to 6.8-µF) decoupling capacitors that are effective at lower frequency must be used on the supply pins. Place these decoupling capacitors further from the device. Share the decoupling capacitors among several devices in the same area of the printed circuit board (PCB).
- For more information on board design and layout, see the evaluation module user guide, LMH32404 Evaluation Module User's Guide.

10.2 Layout Example

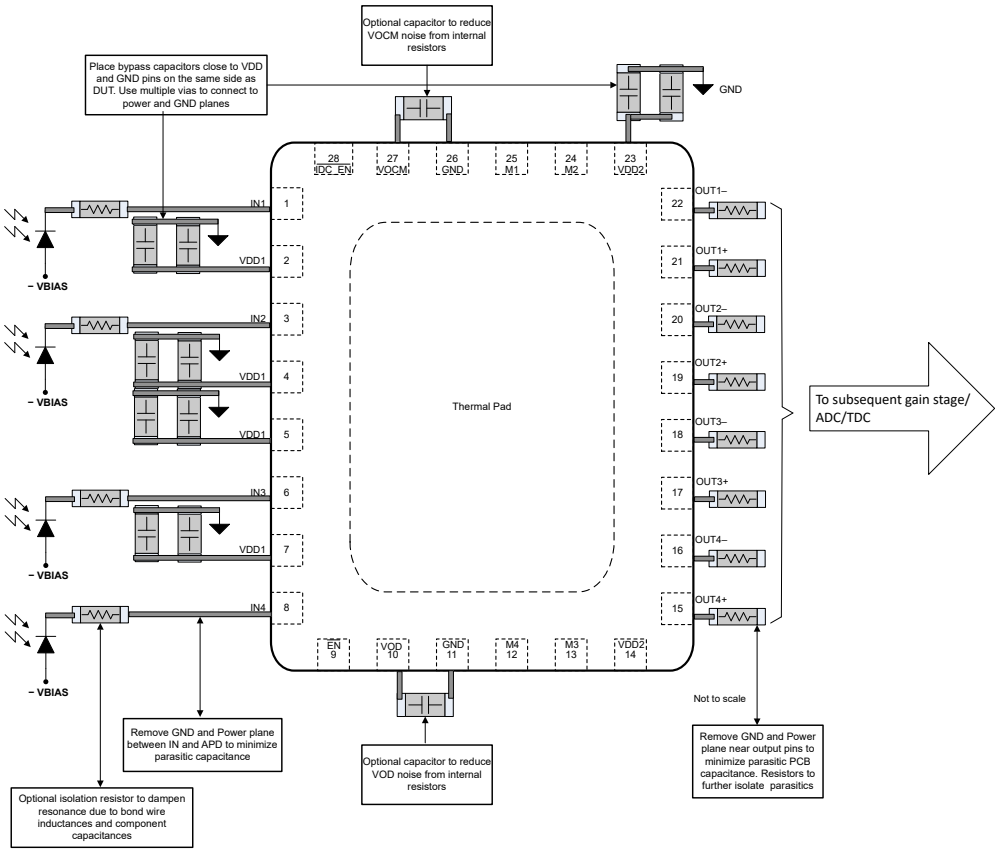

图 10-1. Layout Recommendation

11 Device and Documentation Support

11.1 Device Support

11.1.1 Development Support

- Texas Instruments, *LIDAR-Pulsed Time-of-Flight Reference Design* design guide
- Texas Instruments, *LIDAR-Pulsed Time-of-Flight Reference Design: Using High-Speed Data Converters* design guide
- Texas Instruments, *Optical Front-End System Reference Design* design guide

11.2 Documentation Support

11.2.1 Related Documentation

For related documentation, see the following:

- Texas Instruments, *LMH32404 Evaluation Module* user's guide
- Texas Instruments, *Training Video: High speed TIAs for optical time of flight and LIDAR systems*
- Texas Instruments, *Training Video: Multi-channel optical front-end reference design overview*
- Texas Instruments, *Training Video: How to Convert a TINA-TI Model into a Generic SPICE Model*
- Texas Instruments, *Transimpedance Considerations for High-Speed Amplifiers* application report
- Texas Instruments, *What You Need To Know About Transimpedance Amplifiers – Part 1* blog
- Texas Instruments, *What You Need To Know About Transimpedance Amplifiers – Part 2* blog

11.3 Receiving Notification of Documentation Updates

To receive notification of documentation updates, navigate to the device product folder on ti.com. In the upper right corner, click on *Alert me* to register and receive a weekly digest of any product information that has changed. For change details, review the revision history included in any revised document.

11.4 支持资源

TI E2E™ 支持论坛是工程师的重要参考资料，可直接从专家获得快速、经过验证的解答和设计帮助。搜索现有解答或提出自己的问题可获得所需的快速设计帮助。

链接的内容由各个贡献者“按原样”提供。这些内容并不构成 TI 技术规范，并且不一定反映 TI 的观点；请参阅 TI 的《使用条款》。

11.5 Trademarks

TI E2E™ is a trademark of Texas Instruments.
所有商标均为其各自所有者的财产。

11.6 Electrostatic Discharge Caution

This integrated circuit can be damaged by ESD. Texas Instruments recommends that all integrated circuits be handled with appropriate precautions. Failure to observe proper handling and installation procedures can cause damage.

ESD damage can range from subtle performance degradation to complete device failure. Precision integrated circuits may be more susceptible to damage because very small parametric changes could cause the device not to meet its published specifications.

11.7 术语表

TI 术语表　　本术语表列出并解释了术语、首字母缩略词和定义。

12 Mechanical, Packaging, and Orderable Information

The following pages include mechanical, packaging, and orderable information. This information is the most current data available for the designated devices. This data is subject to change without notice and revision of this document. For browser-based versions of this data sheet, refer to the left-hand navigation.

Copyright © 2022 Texas Instruments Incorporated

PACKAGING INFORMATION

Orderable Device	Status (1)	Package Type	Package Drawing	Pins	Package Qty	Eco Plan (2)	Lead finish/ Ball material (6)	MSL Peak Temp (3)	Op Temp (°C)	Device Marking (4/5)	Samples
LMH32404QWRHFRQ1	ACTIVE	VQFN	RHF	28	3000	RoHS & Green	NIPDAU	Level-2-260C-1 YEAR	-40 to 125	32404Q	Samples
XLMH32404QRHFR	ACTIVE	VQFN	RHF	28	3000	TBD	Call TI	Call TI	-40 to 125		Samples

(1) The marketing status values are defined as follows:
ACTIVE: Product device recommended for new designs.
LIFEBUY: TI has announced that the device will be discontinued, and a lifetime-buy period is in effect.
NRND: Not recommended for new designs. Device is in production to support existing customers, but TI does not recommend using this part in a new design.
PREVIEW: Device has been announced but is not in production. Samples may or may not be available.
OBSOLETE: TI has discontinued the production of the device.

(2) **RoHS:** TI defines "RoHS" to mean semiconductor products that are compliant with the current EU RoHS requirements for all 10 RoHS substances, including the requirement that RoHS substance do not exceed 0.1% by weight in homogeneous materials. Where designed to be soldered at high temperatures, "RoHS" products are suitable for use in specified lead-free processes. TI may reference these types of products as "Pb-Free".
RoHS Exempt: TI defines "RoHS Exempt" to mean products that contain lead but are compliant with EU RoHS pursuant to a specific EU RoHS exemption.
Green: TI defines "Green" to mean the content of Chlorine (Cl) and Bromine (Br) based flame retardants meet JS709B low halogen requirements of <=1000ppm threshold. Antimony trioxide based flame retardants must also meet the <=1000ppm threshold requirement.

(3) MSL, Peak Temp. - The Moisture Sensitivity Level rating according to the JEDEC industry standard classifications, and peak solder temperature.

(4) There may be additional marking, which relates to the logo, the lot trace code information, or the environmental category on the device.

(5) Multiple Device Markings will be inside parentheses. Only one Device Marking contained in parentheses and separated by a "~" will appear on a device. If a line is indented then it is a continuation of the previous line and the two combined represent the entire Device Marking for that device.

(6) Lead finish/Ball material - Orderable Devices may have multiple material finish options. Finish options are separated by a vertical ruled line. Lead finish/Ball material values may wrap to two lines if the finish value exceeds the maximum column width.

Important Information and Disclaimer: The information provided on this page represents TI's knowledge and belief as of the date that it is provided. TI bases its knowledge and belief on information provided by third parties, and makes no representation or warranty as to the accuracy of such information. Efforts are underway to better integrate information from third parties. TI has taken and continues to take reasonable steps to provide representative and accurate information but may not have conducted destructive testing or chemical analysis on incoming materials and chemicals. TI and TI suppliers consider certain information to be proprietary, and thus CAS numbers and other limited information may not be available for release.

In no event shall TI's liability arising out of such information exceed the total purchase price of the TI part(s) at issue in this document sold by TI to Customer on an annual basis.

OTHER QUALIFIED VERSIONS OF LMH32404-Q1 :

- Catalog : LMH32404

NOTE: Qualified Version Definitions:

- Catalog - TI's standard catalog product

TAPE AND REEL INFORMATION

REEL DIMENSIONS

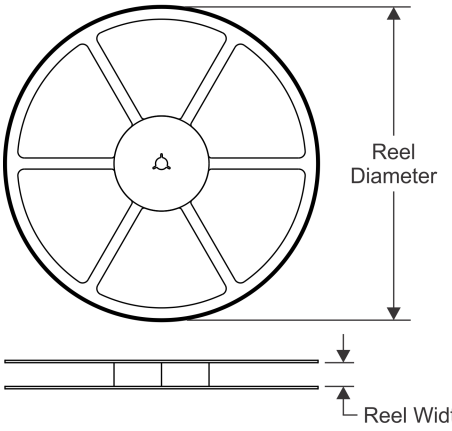

TAPE DIMENSIONS

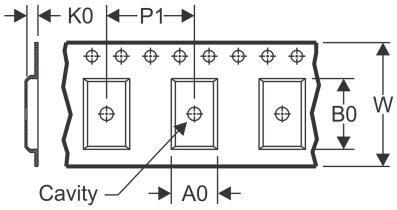

A0	Dimension designed to accommodate the component width
B0	Dimension designed to accommodate the component length
K0	Dimension designed to accommodate the component thickness
W	Overall width of the carrier tape
P1	Pitch between successive cavity centers

QUADRANT ASSIGNMENTS FOR PIN 1 ORIENTATION IN TAPE

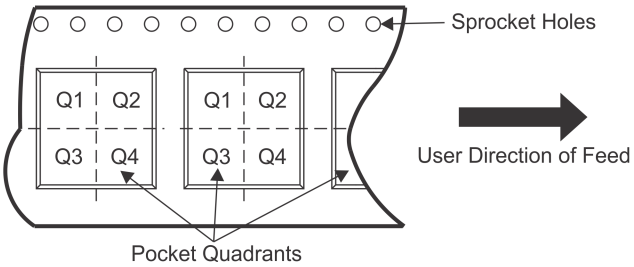

*All dimensions are nominal

Device	Package Type	Package Drawing	Pins	SPQ	Reel Diameter (mm)	Reel Width W1 (mm)	A0 (mm)	B0 (mm)	K0 (mm)	P1 (mm)	W (mm)	Pin1 Quadrant
LMH32404QWRHFRQ1	VQFN	RHF	28	3000	330.0	12.4	4.3	5.3	1.3	8.0	12.0	Q1

TAPE AND REEL BOX DIMENSIONS

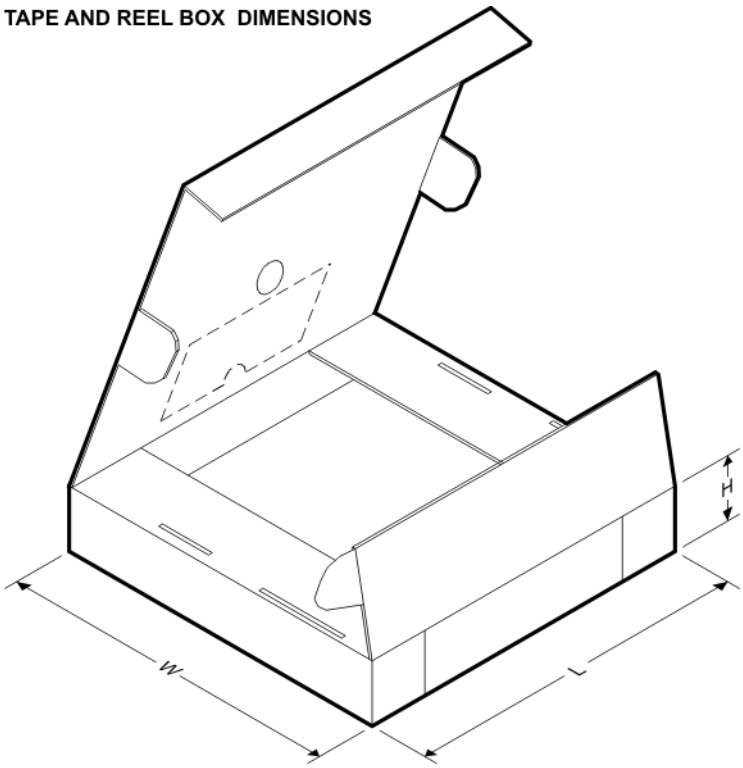

*All dimensions are nominal

Device	Package Type	Package Drawing	Pins	SPQ	Length (mm)	Width (mm)	Height (mm)
LMH32404QWRHFRQ1	VQFN	RHF	28	3000	367.0	367.0	35.0

RHF 28

VQFN - 1.0 mm max height

PLASTIC QUAD FLATPACK - NO LEAD

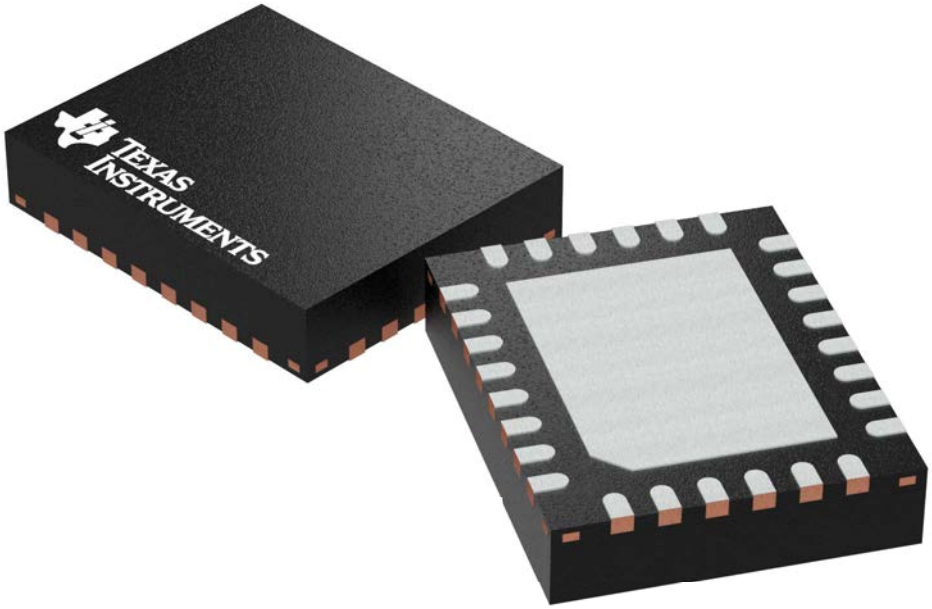

Images above are just a representation of the package family, actual package may vary.
Refer to the product data sheet for package details.

RHF0028B

PACKAGE OUTLINE

VQFN - 1.0 mm max height

PLASTIC QUAD FLATPACK - NO LEAD

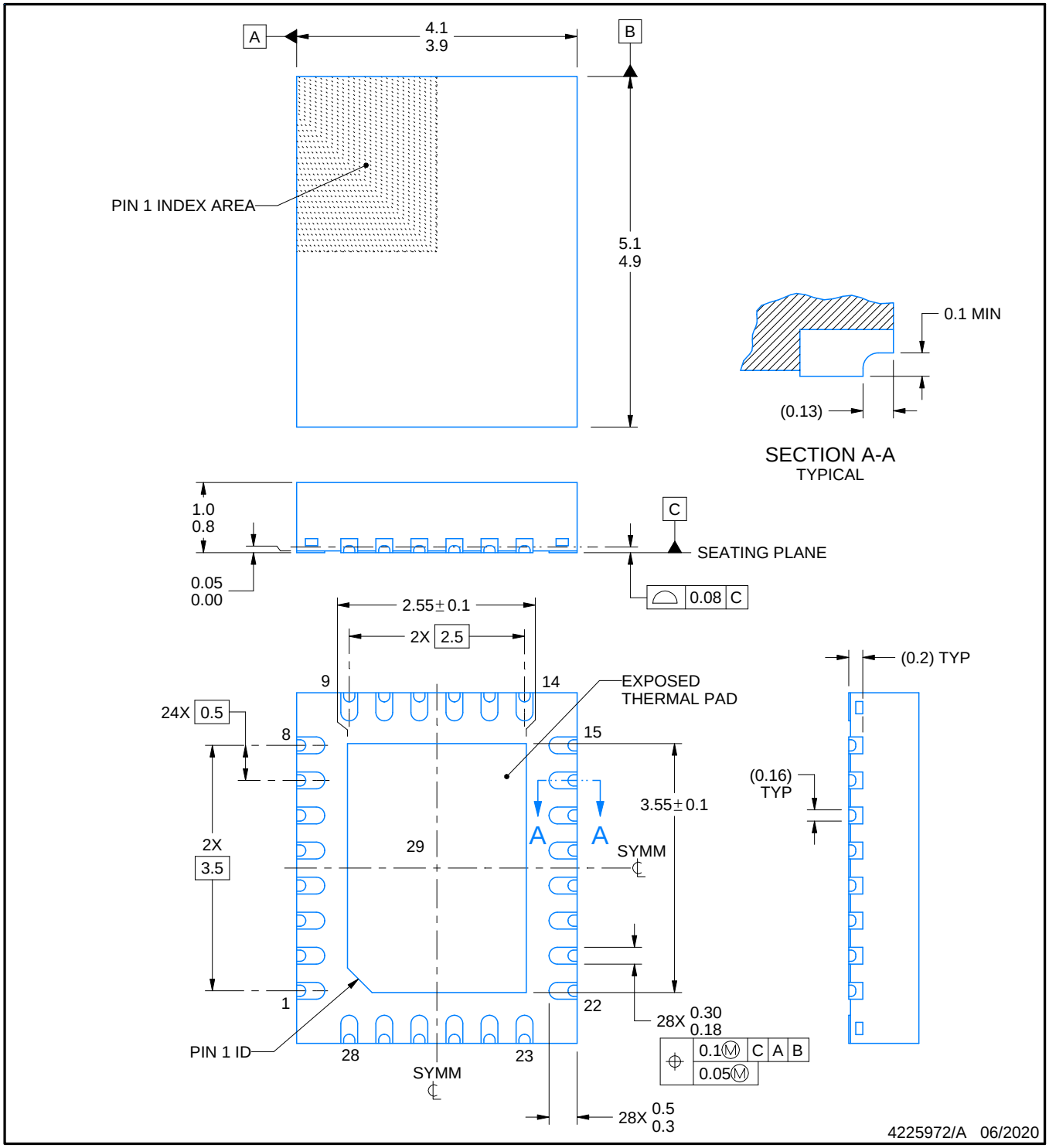

NOTES:

1. All linear dimensions are in millimeters. Any dimensions in parenthesis are for reference only. Dimensioning and tolerancing per ASME Y14.5M.
2. This drawing is subject to change without notice.
3. The package thermal pad must be soldered to the printed circuit board for thermal and mechanical performance.

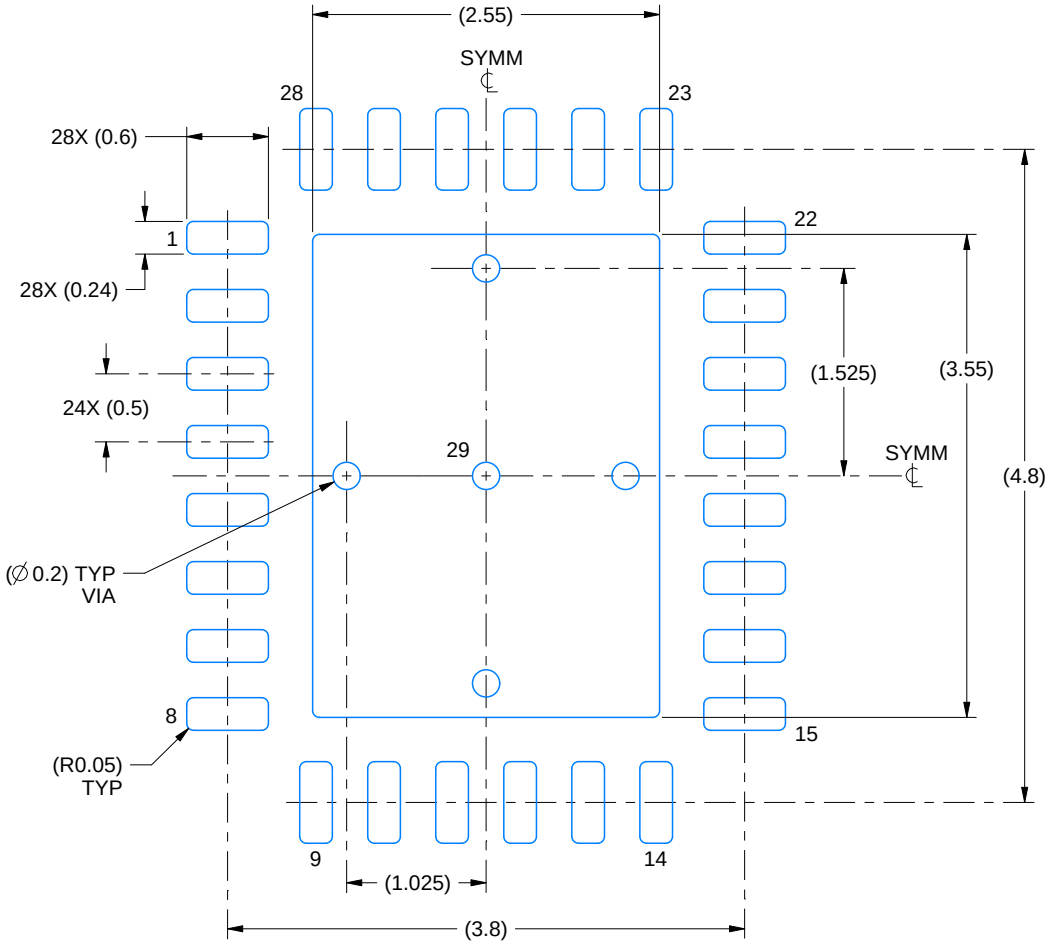

LAND PATTERN EXAMPLE
SCALE:18X

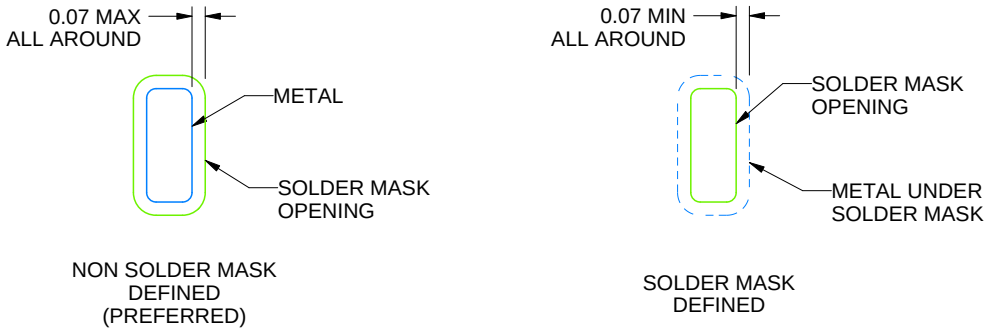

SOLDER MASK DETAILS

4225972/A 06/2020

NOTES: (continued)

4. This package is designed to be soldered to a thermal pad on the board. For more information, see Texas Instruments literature number SLUA271 (www.ti.com/lit/slua271).
5. Vias are optional depending on application, refer to device data sheet. If any vias are implemented, refer to their locations shown on this view. It is recommended that vias under paste be filled, plugged or tented.

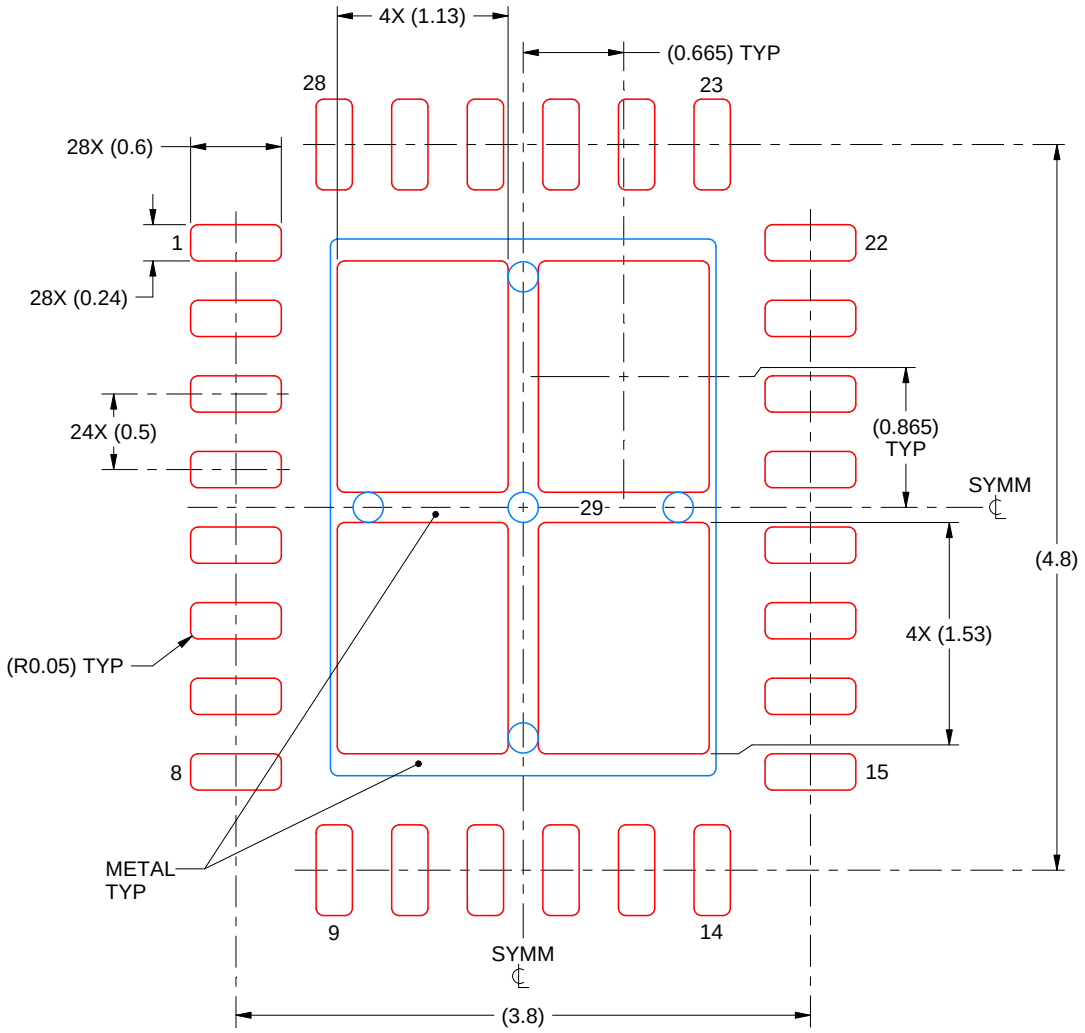

SOLDER PASTE EXAMPLE
BASED ON 0.125 mm THICK STENCIL

EXPOSED PAD 29
76% PRINTED SOLDER COVERAGE BY AREA UNDER PACKAGE
SCALE:20X

4225972/A 06/2020

NOTES: (continued)

6. Laser cutting apertures with trapezoidal walls and rounded corners may offer better paste release. IPC-7525 may have alternate design recommendations.

重要声明和免责声明

TI“按原样”提供技术和可靠性数据（包括数据表）、设计资源（包括参考设计）、应用或其他设计建议、网络工具、安全信息和其他资源，不保证没有瑕疵且不做出任何明示或暗示的担保，包括但不限于对适销性、某特定用途方面的适用性或不侵犯任何第三方知识产权的暗示担保。

这些资源可供使用 TI 产品进行设计的熟练开发人员使用。您将自行承担以下全部责任：(1) 针对您的应用选择合适的 TI 产品，(2) 设计、验证并测试您的应用，(3) 确保您的应用满足相应标准以及任何其他功能安全、信息安全、监管或其他要求。

这些资源如有变更，恕不另行通知。TI 授权您仅可将这些资源用于研发本资源所述的 TI 产品的应用。严禁对这些资源进行其他复制或展示。您无权使用任何其他 TI 知识产权或任何第三方知识产权。您应全额赔偿因在这些资源的使用中对 TI 及其代表造成的任何索赔、损害、成本、损失和债务，TI 对此概不负责。

TI 提供的产品受 TI 的销售条款或 ti.com 上其他适用条款/TI 产品随附的其他适用条款的约束。TI 提供这些资源并不会扩展或以其他方式更改 TI 针对 TI 产品发布的适用的担保或担保免责声明。

TI 反对并拒绝您可能提出的任何其他或不同的条款。

邮寄地址：Texas Instruments, Post Office Box 655303, Dallas, Texas 75265
Copyright © 2022，德州仪器 (TI) 公司