# LMT84 1.5、SC70/TO-92/TO-92S 模拟温度传感器

## 1 特性

- LMT84LPG（TO-92S 封装）具有快速热时间常量，典型值为 10s（气流速度为 1.2m/s）
- 非常精确：典型值 ±0.4°C
- 1.5V 低压运行
- -5.5mV/°C 的平均传感器增益
- 5.4µA 低静态电流
- 宽温度范围：–50°C 至 150°C
- 输出受到短路保护
- 具有 ±50µA 驱动能力的推挽输出
- 封装尺寸兼容符合行业标准的 LM20/19 和 LM35 温度传感器
- 具有成本优势的热敏电阻替代产品

## 2 应用

- 信息娱乐系统与仪表组
- 动力传动系统
- 烟雾和热量探测器
- 无人机
- 电器

热时间常量

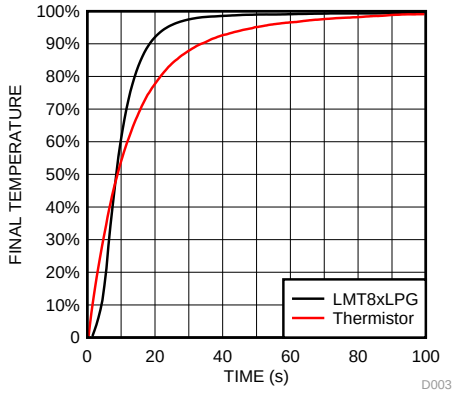


* 快速热响应 NTC

## 3 说明

LMT84 是一款精密 CMOS 温度传感器，其典型精度为 ±0.4°C（最大值为 ±2.7°C），且线性模拟输出电压与温度成反比关系。1.5V 工作电源电压、5.4µA 静态电流和 0.7ms 开通时间可实现有效的功率循环架构，以最大限度地降低无人机和传感器节点等电池供电 应用 的功耗。LMT84 LPG 穿孔 TO-92S 封装快速热时间常量支持非板载时间温度敏感型 应用， 例如烟雾和热量探测器。 得益于宽工作范围内的精度和其他 特性， 使得 LMT84 成为热敏电阻的优质替代产品。

对于具有不同平均传感器增益和类似精度的器件，请参阅 *类似替代器件 了解 LMT8x 系列中的替代器件。*

器件信息 (1)

| 器件型号 | 封装 | 封装尺寸（标称值） |
|---|---|---|
| LMT84 | SOT (5) | 2.00mm x 1.25mm |
| | TO-92 (3) | 4.30mm x 3.50mm |
| | TO-92S (3) | 4.00mm x 3.15mm |

(1) 如需了解所有可用封装，请参阅数据表末尾的可订购产品附录。

输出电压与温度间的关系

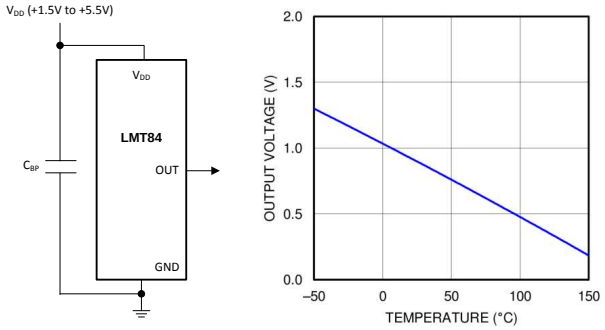


Copyright © 2016, Texas Instruments Incorporated

An IMPORTANT NOTICE at the end of this data sheet addresses availability, warranty, changes, use in safety-critical applications, intellectual property matters and other important disclaimers. PRODUCTION DATA.

# 目录

1 特性 ... 1
2 应用 ... 1
3 说明 ... 1
4 修订历史记录 ... 2
5 **Device Comparison Tables** ... 3
6 **Pin Configuration and Functions** ... 4
7 **Specifications** ... 5
7.1 Absolute Maximum Ratings ... 5
7.2 ESD Ratings ... 5
7.3 Recommended Operating Conditions ... 5
7.4 Thermal Information ... 5
7.5 Accuracy Characteristics ... 6
7.6 Electrical Characteristics ... 6
7.7 Typical Characteristics ... 7
8 **Detailed Description** ... 9
8.1 Overview ... 9
8.2 Functional Block Diagram ... 9
8.3 Feature Description ... 9
8.4 Device Functional Modes ... 11
9 **Application and Implementation** ... 13
9.1 Applications Information ... 13
9.2 Typical Applications ... 13
10 **Power Supply Recommendations** ... 14
11 **Layout** ... 15
11.1 Layout Guidelines ... 15
11.2 Layout Examples ... 15
12 器件和文档支持 ... 16
12.1 接收文档更新通知 ... 16
12.2 社区资源 ... 16
12.3 商标 ... 16
12.4 静电放电警告 ... 16
12.5 Glossary ... 16
13 机械、封装和可订购信息 ... 16

## 4 修订历史记录

注：之前版本的页码可能与当前版本有所不同。

**Changes from Revision D (June 2017) to Revision E** — **Page**

- 将汽车器件移到了单独的数据表中 (SNIS178) ... 1
- Changed TO-92 GND pin number from: 1 to: 3 ... 4
- Changed TO-92 $V_{DD}$ pin number from: 3 to: 1 ... 4

**Changes from Revision C (October 2015) to Revision D** — **Page**

- 将数据表更新为最新的文档和翻译标准 ... 1
- 将 AEC-Q100 汽车标准项目符号添加到了*“特性”中* ... 1
- 添加了时间常量图 ... 1
- 将磁盘驱动器、游戏、无线收发器和手机从*“应用”中进行了删除* ... 1
- Added LPG (TO-92S) package ... 4
- Added Figure 10 to *Typical Characteristics* ... 7

**Changes from Revision B (May 2014) to Revision C** — **Page**

- 已删除 所有涉及 TO-126 封装的内容 ... 1
- Added TO-92 LPM pin configuration graphic ... 4
- Changed Handling Ratings to ESD Ratings and moved Storage Temperature to Absolute Maximum Ratings table ... 5
- Changed KV to V ... 5
- Added layout recommendation for TO-92 LP and LPM packages ... 15

**Changes from Revision A (June 2013) to Revision B** — **Page**

- 已更改 更改了数据表流程和布局，以符合 TI 新标准。在整个文档内添加了以下章节：应用范围和实施、电源建议、布局布线、器件和文档支持、机械、封装和可订购信息。 ... 1
- 已添加 在文档中增加了 TO-92 和 TO-126 封装信息。 ... 1
- Changed from 450°C/W to 275 °C/W. New specification is derived using TI ' s latest methodology. ... 5


Copyright © 2013–2017, Texas Instruments Incorporated

• Deleted Note: The input current is leakage only and is highest at high temperature. It is typically only 0.001 µA. The 1 µA limit is solely based on a testing limitation and does not reflect the actual performance of the part. ..... 6

## 5 Device Comparison Tables

**Table 1. Available Device Packages**

| ORDER NUMBER(1) | PACKAGE | PIN | BODY SIZE (NOM) | MOUNTING TYPE |
|---|---|---|---|---|
| LMT84DCK | SOT (AKA(2): SC70, DCK) | 5 | 2.00 mm × 1.25 mm | Surface Mount |
| LMT84LP | TO-92 (AKA(2): LP) | 3 | 4.30 mm × 3.50 mm | Through-hole; straight leads |
| LMT84LPG | TO-92S (AKA(2): LPG) | 3 | 4.00 mm × 3.15 mm | Through-hole; straight leads |
| LMT84LPM | TO-92 (AKA(2): LPM) | 3 | 4.30 mm × 3.50 mm | Through-hole; formed leads |
| LMT84DCK-Q1 | SOT (AKA(2): SC70, DCK) | 5 | 2.00 mm × 1.25 mm | Surface Mount |

(1) For all available packages and complete order numbers, see the Package Option addendum at the end of the data sheet.
(2) AKA = Also Known As

**Table 2. Comparable Alternative Devices**

| DEVICE NAME | AVERAGE OUTPUT SENSOR GAIN | POWER SUPPLY RANGE |
|---|---|---|
| LMT84 | –5.5 mV/°C | 1.5 V to 5.5 V |
| LMT85 | –8.2 mV/°C | 1.8 V to 5.5 V |
| LMT86 | –10.9 mV/°C | 2.2 V to 5.5 V |
| LMT87 | –13.6 mV/°C | 2.7 V to 5.5 V |

Copyright © 2013–2017, Texas Instruments Incorporated

# 6 Pin Configuration and Functions

**DCK Package**
**5-Pin SOT (SC70)**
**(Top View)**

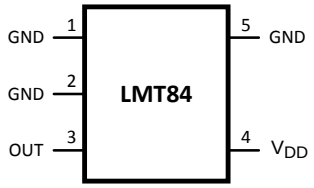


**LP Package**
**3-Pin TO-92**
**(Top View)**

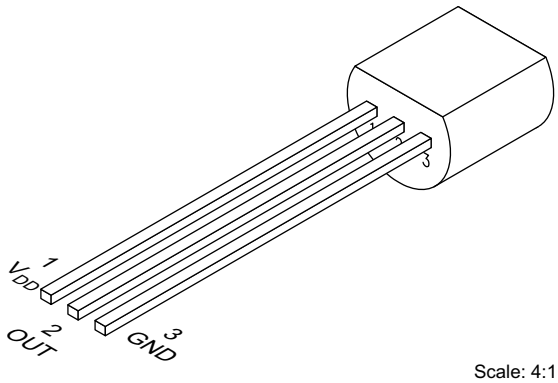


Scale: 4:1

**LPG Package**
**3-Pin TO-92S**
**(Top View)**

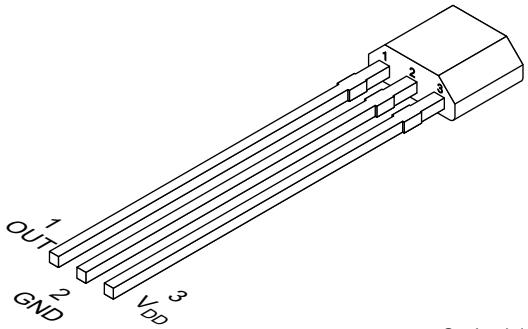


Scale: 4:1

**LPM Package**
**3-Pin TO-92**
**(Top View)**

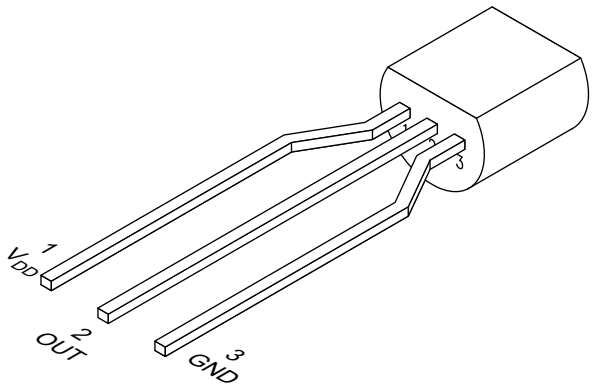


Scale: 4:1

## Pin Functions

| PIN | | | | TYPE | DESCRIPTION | |
|---|---|---|---|---|---|---|
| NAME | SOT (SC70) | TO-92 | TO-92S | | EQUIVALENT CIRCUIT | FUNCTION |
| GND | 1, 2[(1)] , 5 | 3 | 2 | Ground | N/A | Power Supply Ground |
| OUT | 3 | 2 | 1 | Analog Output | 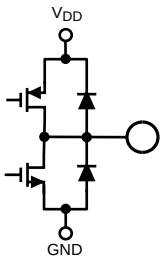  | Outputs a voltage that is inversely proportional to temperature |
| $V_{DD}$ | 4 | 1 | 3 | Power | N/A | Positive Supply Voltage |

(1) Direct connection to the back side of the die


Copyright © 2013–2017, Texas Instruments Incorporated

# 7 Specifications

## 7.1 Absolute Maximum Ratings

See [1][2]

| | MIN | MAX | UNIT |
|---|---|---|---|
| Supply voltage | –0.3 | 6 | V |
| Voltage at output pin | –0.3 | ($V_{DD}$ + 0.5) | V |
| Output current | –7 | 7 | mA |
| Input current at any pin[3] | –5 | 5 | mA |
| Maximum junction temperature ($T_{JMAX}$) | | 150 | °C |
| Storage temperature $T_{stg}$ | –65 | 150 | °C |

(1) Stresses beyond those listed under *Absolute Maximum Ratings* may cause permanent damage to the device. These are stress ratings only, which do not imply functional operation of the device at these or any other conditions beyond those indicated under *Recommended Operating Conditions*. Exposure to absolute-maximum-rated conditions for extended periods may affect device reliability.
(2) *Soldering process must comply with Reflow Temperature Profile specifications. Refer to* www.ti.com/packaging.
(3) When the input voltage ($V_I$) at any pin exceeds power supplies ($V_I$ < GND or $V_I$ > V), the current at that pin should be limited to 5 mA.

## 7.2 ESD Ratings

| | | | VALUE | UNIT |
|---|---|---|---|---|
| LMT84LP in TO-92/TO-92S package | | | | |
| $V_{(ESD)}$ | Electrostatic discharge | Human-body model (HBM), per ANSI/ESDA/JEDEC JS-001[1][2] | ±2500 | V |
| | | Charged-device model (CDM), per JEDEC specification JESD22-C101[3] | ±1000 | |
| LMT84DCK in SC70 package | | | | |
| $V_{(ESD)}$ | Electrostatic discharge | Human-body model (HBM), per JESD22-A114[2] | ±2500 | V |
| | | Charged-device model (CDM), per JEDEC specification JESD22-C101[3] | ±1000 | |

(1) JEDEC document JEP155 states that 500-V HBM allows safe manufacturing with a standard ESD control process.
(2) The human body model is a 100-pF capacitor discharged through a 1.5-kΩ resistor into each pin.
(3) JEDEC document JEP157 states that 250-V CDM allows safe manufacturing with a standard ESD control process.

## 7.3 Recommended Operating Conditions

| | MIN | MAX | UNIT |
|---|---|---|---|
| Specified temperature | $T_{MIN} \le T_A \le T_{MAX}$ | | °C |
| | $-50 \le T_A \le 150$ | | °C |
| Supply voltage ($V_{DD}$) | 1.5 | 5.5 | V |

## 7.4 Thermal Information[1]

| THERMAL METRIC[2] | | LMT84/ LMT84-Q1 | LMT84LP | LMT84LPG | UNIT |
|---|---|---|---|---|---|
| | | DCK (SOT/SC70) | LP/LPM (TO-92) | LPG (TO-92S) | |
| | | 5 PINS | 3 PINS | 3 PINS | |
| $R_{\theta JA}$ | Junction-to-ambient thermal resistance [3][4] | 275 | 167 | 130.4 | °C/W |
| $R_{\theta JC(top)}$ | Junction-to-case (top) thermal resistance | 84 | 90 | 64.2 | °C/W |
| $R_{\theta JB}$ | Junction-to-board thermal resistance | 56 | 146 | 106.2 | °C/W |
| $\psi_{JT}$ | Junction-to-top characterization parameter | 1.2 | 35 | 14.6 | °C/W |
| $\psi_{JB}$ | Junction-to-board characterization parameter | 55 | 146 | 106.2 | °C/W |

(1) For information on self-heating and thermal response time see section Mounting and Thermal Conductivity.
(2) For more information about traditional and new thermal metrics, see the *IC Package Thermal Metrics* application report.
(3) The junction to ambient thermal resistance ($R_{\theta JA}$) under natural convection is obtained in a simulation on a JEDEC-standard, High-K board as specified in JESD51-7, in an environment described in JESD51-2. Exposed pad packages assume that thermal vias are included in the PCB, per JESD 51-5.
(4) Changes in output due to self heating can be computed by multiplying the internal dissipation by the thermal resistance.

Copyright © 2013–2017, Texas Instruments Incorporated

## 7.5 Accuracy Characteristics

These limits do not include DC load regulation. These stated accuracy limits are with reference to the values in Table 3.

| PARAMETER | TEST CONDITIONS | MIN(1) | TYP(2) | MAX(1) | UNIT |
|---|---|---|---|---|---|
| Temperature accuracy (3) | 70°C to 150°C; $V_{DD}$ = 1.5 V to 5.5 V | –2.7 | ±0.6 | 2.7 | °C |
| | 0°C to 70°C; $V_{DD}$ = 1.5 V to 5.5 V | –2.7 | ±0.9 | 2.7 | °C |
| | –50°C to +0°C; $V_{DD}$ = 1.6 V to 5.5 V | –2.7 | ±0.9 | 2.7 | °C |
| | –50°C to +150°C; $V_{DD}$ = 2.3 V to 5.5 V | | ±0.4 | | °C |

(1) Limits are specified to TI's AOQL (Average Outgoing Quality Level).
(2) Typicals are at $T_J = T_A$ = 25°C and represent most likely parametric norm.
(3) Accuracy is defined as the error between the measured and reference output voltages, tabulated in Table 3 at the specified conditions of supply gain setting, voltage, and temperature (expressed in °C). Accuracy limits include line regulation within the specified conditions. Accuracy limits do not include load regulation; they assume no DC load.

## 7.6 Electrical Characteristics

Unless otherwise noted, these specifications apply for $V_{DD}$ = +1.5 V to +5.5 V. minimum and maximum limits apply for $T_A = T_J = T_{MIN}$ to $T_{MAX}$; typical values apply for $T_A = T_J$ = 25°C.

| PARAMETER | | TEST CONDITIONS | MIN(1) | TYP(2) | MAX (1) | UNIT |
|---|---|---|---|---|---|---|
| | Sensor gain | | | –5.5 | | mV/°C |
| | Load regulation (3) | Source ≤ 50 µA, ($V_{DD} – V_{OUT}$) ≥ 200 mV | –1 | –0.22 | | mV |
| | | Sink ≤ 50 µA, $V_{OUT}$ ≥ 200 mV | | 0.26 | 1 | mV |
| | Line regulation (4) | | | 200 | | µV/V |
| $I_S$ | Supply current | $T_A$ = 30°C to 150°C, ($V_{DD} – V_{OUT}$) ≥ 100 mV | | 5.4 | 8.1 | µA |
| | | $T_A$ = –50°C to 150°C, ($V_{DD} – V_{OUT}$) ≥ 100 mV | | 5.4 | 9 | µA |
| $C_L$ | Output load capacitance | | | 1100 | | pF |
| | Power-on time (5) | $C_L$= 0 pF to 1100 pF | | 0.7 | 1.9 | ms |
| | Output drive | | | ±50 | | µA |

(1) Limits are specific to TI's AOQL (Average Outgoing Quality Level).
(2) Typicals are at $T_J = T_A$ = 25°C and represent most likely parametric norm.
(3) Source currents are flowing out of the LMT84-xx. Sink currents are flowing into the LMT84-xx.
(4) Line regulation (DC) is calculated by subtracting the output voltage at the highest supply voltage from the output voltage at the lowest supply voltage. The typical DC line regulation specification does not include the output voltage shift discussed in *Output Voltage Shift*.
(5) Specified by design and characterization.


Copyright © 2013–2017, Texas Instruments Incorporated

## 7.7 Typical Characteristics

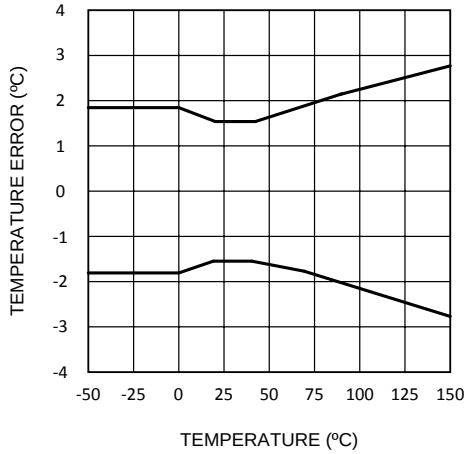


**Figure 1. Temperature Error vs Temperature**

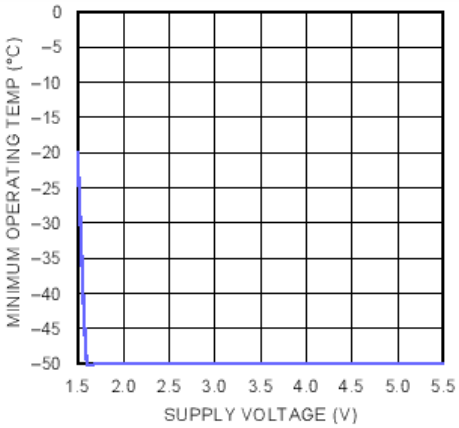


**Figure 2. Minimum Operating Temperature vs Supply Voltage**

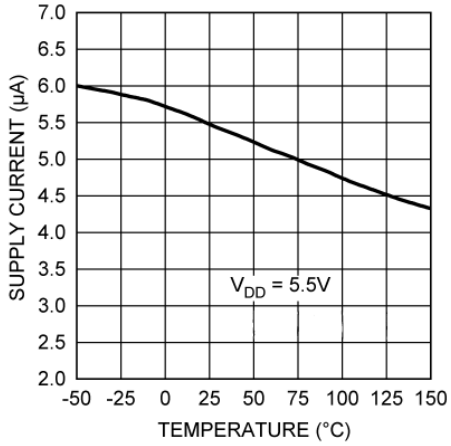


**Figure 3. Supply Current vs Temperature**

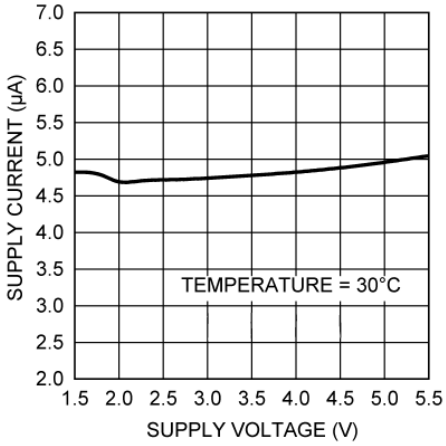


**Figure 4. Supply Current vs Supply Voltage**

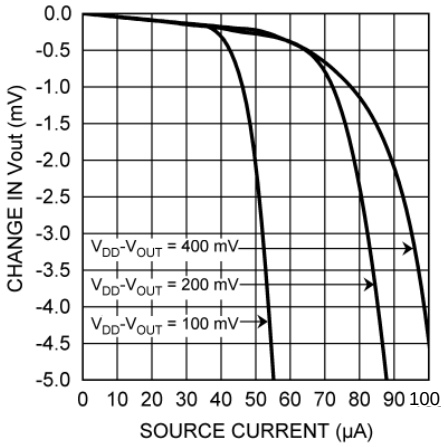


**Figure 5. Load Regulation, Sourcing Current**

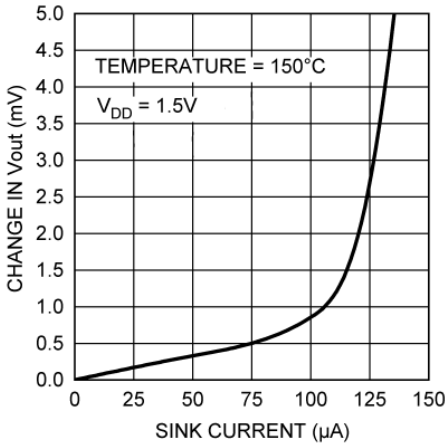


**Figure 6. Load Regulation, Sinking Current**

## Typical Characteristics (continued)

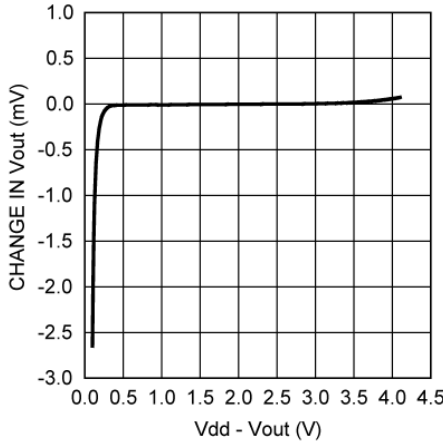


**Figure 7. Change in Vout vs Overhead Voltage**

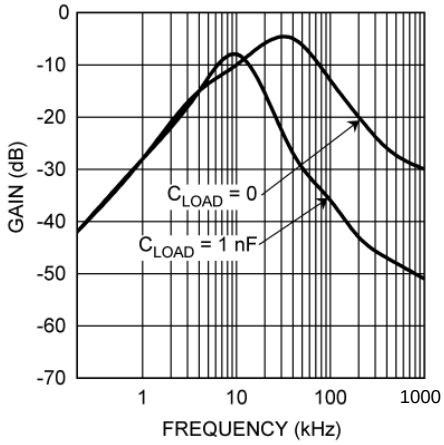


**Figure 8. Supply-Noise Gain vs Frequency**

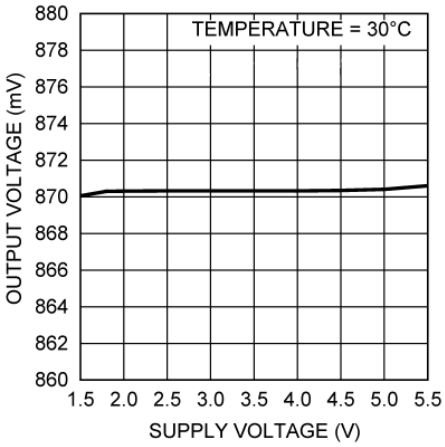


**Figure 9. Output Voltage vs Supply Voltage**

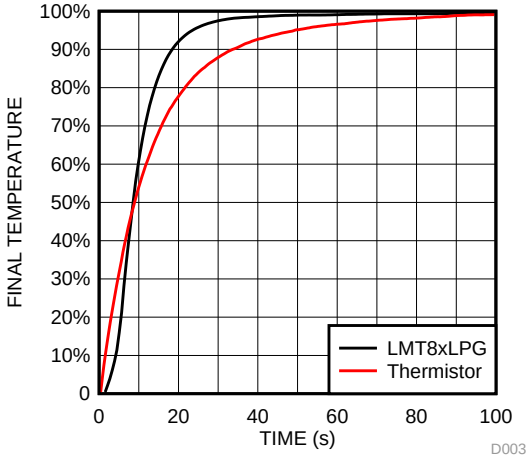


**Figure 10. LMT84LPG Thermal Response vs Common Leaded Thermistor With 1.2-m/s Airflow**


Copyright © 2013–2017, Texas Instruments Incorporated

# 8 Detailed Description

## 8.1 Overview

The LMT84 is an analog output temperature sensor. The temperature-sensing element is comprised of a simple base emitter junction that is forward biased by a current source. The temperature-sensing element is then buffered by an amplifier and provided to the OUT pin. The amplifier has a simple push-pull output stage thus providing a low impedance output source.

## 8.2 Functional Block Diagram

Full-Range Celsius Temperature Sensor (−50°C to +150°C)

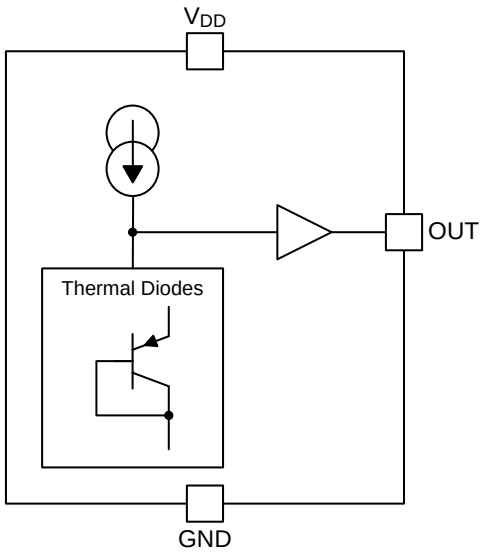


## 8.3 Feature Description

### 8.3.1 LMT84 Transfer Function

The output voltage of the LMT84, across the complete operating temperature range, is shown in Table 3. This table is the reference from which the LMT84 accuracy specifications (listed in the *Accuracy Characteristics* section) are determined. This table can be used, for example, in a host processor look-up table. A file containing this data is available for download at the LMT84 product folder under *Tools and Software Models*.

**Table 3. LMT84 Transfer Table**

| TEMP (°C) | $V_{OUT}$ (mV) | TEMP (°C) | $V_{OUT}$ (mV) | TEMP (°C) | $V_{OUT}$ (mV) | TEMP (°C) | $V_{OUT}$ (mV) | TEMP (°C) | $V_{OUT}$ (mV) |
|---|---|---|---|---|---|---|---|---|---|
| –50 | 1299 | -10 | 1088 | 30 | 871 | 70 | 647 | 110 | 419 |
| –49 | 1294 | -9 | 1082 | 31 | 865 | 71 | 642 | 111 | 413 |
| –48 | 1289 | -8 | 1077 | 32 | 860 | 72 | 636 | 112 | 407 |
| –47 | 1284 | -7 | 1072 | 33 | 854 | 73 | 630 | 113 | 401 |
| –46 | 1278 | -6 | 1066 | 34 | 849 | 74 | 625 | 114 | 396 |
| –45 | 1273 | -5 | 1061 | 35 | 843 | 75 | 619 | 115 | 390 |
| –44 | 1268 | -4 | 1055 | 36 | 838 | 76 | 613 | 116 | 384 |
| –43 | 1263 | -3 | 1050 | 37 | 832 | 77 | 608 | 117 | 378 |
| –42 | 1257 | -2 | 1044 | 38 | 827 | 78 | 602 | 118 | 372 |
| –41 | 1252 | -1 | 1039 | 39 | 821 | 79 | 596 | 119 | 367 |
| –40 | 1247 | 0 | 1034 | 40 | 816 | 80 | 591 | 120 | 361 |
| –39 | 1242 | 1 | 1028 | 41 | 810 | 81 | 585 | 121 | 355 |
| –38 | 1236 | 2 | 1023 | 42 | 804 | 82 | 579 | 122 | 349 |

Copyright © 2013–2017, Texas Instruments Incorporated

## Feature Description (continued)

**Table 3. LMT84 Transfer Table (continued)**

| TEMP (°C) | $V_{OUT}$ (mV) | TEMP (°C) | $V_{OUT}$ (mV) | TEMP (°C) | $V_{OUT}$ (mV) | TEMP (°C) | $V_{OUT}$ (mV) | TEMP (°C) | $V_{OUT}$ (mV) |
|---|---|---|---|---|---|---|---|---|---|
| –37 | 1231 | 3 | 1017 | 43 | 799 | 83 | 574 | 123 | 343 |
| –36 | 1226 | 4 | 1012 | 44 | 793 | 84 | 568 | 124 | 337 |
| –35 | 1221 | 5 | 1007 | 45 | 788 | 85 | 562 | 125 | 332 |
| –34 | 1215 | 6 | 1001 | 46 | 782 | 86 | 557 | 126 | 326 |
| –33 | 1210 | 7 | 996 | 47 | 777 | 87 | 551 | 127 | 320 |
| –32 | 1205 | 8 | 990 | 48 | 771 | 88 | 545 | 128 | 314 |
| –31 | 1200 | 9 | 985 | 49 | 766 | 89 | 539 | 129 | 308 |
| –30 | 1194 | 10 | 980 | 50 | 760 | 90 | 534 | 130 | 302 |
| –29 | 1189 | 11 | 974 | 51 | 754 | 91 | 528 | 131 | 296 |
| –28 | 1184 | 12 | 969 | 52 | 749 | 92 | 522 | 132 | 291 |
| –27 | 1178 | 13 | 963 | 53 | 743 | 93 | 517 | 133 | 285 |
| –26 | 1173 | 14 | 958 | 54 | 738 | 94 | 511 | 134 | 279 |
| –25 | 1168 | 15 | 952 | 55 | 732 | 95 | 505 | 135 | 273 |
| –24 | 1162 | 16 | 947 | 56 | 726 | 96 | 499 | 136 | 267 |
| –23 | 1157 | 17 | 941 | 57 | 721 | 97 | 494 | 137 | 261 |
| –22 | 1152 | 18 | 936 | 58 | 715 | 98 | 488 | 138 | 255 |
| –21 | 1146 | 19 | 931 | 59 | 710 | 99 | 482 | 139 | 249 |
| –20 | 1141 | 20 | 925 | 60 | 704 | 100 | 476 | 140 | 243 |
| –19 | 1136 | 21 | 920 | 61 | 698 | 101 | 471 | 141 | 237 |
| –18 | 1130 | 22 | 914 | 62 | 693 | 102 | 465 | 142 | 231 |
| –17 | 1125 | 23 | 909 | 63 | 687 | 103 | 459 | 143 | 225 |
| –16 | 1120 | 24 | 903 | 64 | 681 | 104 | 453 | 144 | 219 |
| –15 | 1114 | 25 | 898 | 65 | 676 | 105 | 448 | 145 | 213 |
| –14 | 1109 | 26 | 892 | 66 | 670 | 106 | 442 | 146 | 207 |
| –13 | 1104 | 27 | 887 | 67 | 664 | 107 | 436 | 147 | 201 |
| –12 | 1098 | 28 | 882 | 68 | 659 | 108 | 430 | 148 | 195 |
| –11 | 1093 | 29 | 876 | 69 | 653 | 109 | 425 | 149 | 189 |
| | | | | | | | | 150 | 183 |

Although the LMT84 is very linear, the response does have a slight umbrella parabolic shape. This shape is very accurately reflected in Table 3. The transfer table can be calculated by using the parabolic equation (Equation 1).

$$V_{TEMP}(mV) = 870.6mV - \left[5.506\frac{mV}{°C}(T - 30°C)\right] - \left[0.00176\frac{mV}{°C^2}(T - 30°C)^2\right] \quad (1)$$

The parabolic equation is an approximation of the transfer table and the accuracy of the equation degrades slightly at the temperature range extremes. Equation 1 can be solved for T, resulting in:

$$T = \frac{5.506 - \sqrt{(-5.506)^2 + 4 \times 0.00176 \times (870.6 - V_{TEMP}(mV))}}{2 \times (-0.00176)} + 30 \quad (2)$$

For an even less accurate linear approximation, a line can easily be calculated over the desired temperature range from the table using the two-point equation (Equation 3):

$$V - V_1 = \left(\frac{V_2 - V_1}{T_2 - T_1}\right) \times (T - T_1)$$

where

- V is in mV,
- T is in °C,
- $T_1$ and $V_1$ are the coordinates of the lowest temperature,
- and $T_2$ and $V_2$ are the coordinates of the highest temperature. (3)


Copyright © 2013–2017, Texas Instruments Incorporated

For example, if the user wanted to resolve this equation, over a temperature range of 20°C to 50°C, they would proceed as follows:

$$V - 925\ mV = \left(\frac{760\ mV - 925\ mV}{50^oC - 20^oC}\right) \times (T - 20^oC) \quad (4)$$

$$V - 925\ mV = (-5.50\ mV / {}^oC) \times (T - 20^oC) \quad (5)$$

$$V = (-5.50\ mV / {}^oC) \times T + 1035\ mV \quad (6)$$

Using this method of linear approximation, the transfer function can be approximated for one or more temperature ranges of interest.

## 8.4 Device Functional Modes

### 8.4.1 Mounting and Thermal Conductivity

The LMT84 can be applied easily in the same way as other integrated-circuit temperature sensors. It can be glued or cemented to a surface.

To ensure good thermal conductivity, the backside of the LMT84 die is directly attached to the GND pin. The temperatures of the lands and traces to the other leads of the LMT84 will also affect the temperature reading.

Alternatively, the LMT84 can be mounted inside a sealed-end metal tube, and can then be dipped into a bath or screwed into a threaded hole in a tank. As with any IC, the LMT84 and accompanying wiring and circuits must be kept insulated and dry, to avoid leakage and corrosion. This is especially true if the circuit may operate at cold temperatures where condensation can occur. If moisture creates a short circuit from the output to ground or $V_{DD}$, the output from the LMT84 will not be correct. Printed-circuit coatings are often used to ensure that moisture cannot corrode the leads or circuit traces.

The thermal resistance junction to ambient ($R_{\theta JA}$ or $\theta_{JA}$) is the parameter used to calculate the rise of a device junction temperature due to its power dissipation. Use Equation 7 to calculate the rise in the LMT84 die temperature:

$$T_J = T_A + \theta_{JA}\left[(V_{DD}I_S) + (V_{DD} - V_O)\, I_L\right]$$

where

- $T_A$ is the ambient temperature,
- $I_S$ is the supply current,
- $I_L$ is the load current on the output,
- and $V_O$ is the output voltage. (7)

For example, in an application where $T_A$ = 30°C, $V_{DD}$ = 5 V, $I_S$ = 5.4 µA, $V_{OUT}$ = 871 mV, and $I_L$ = 2 µA, the junction temperature would be 30.015°C, showing a self-heating error of only 0.015°C. Because the junction temperature of the LMT84 device is the actual temperature being measured, take care to minimize the load current that the LMT84 is required to drive. *Thermal Information* shows the thermal resistance of the LMT84.

### 8.4.2 Output Noise Considerations

A push-pull output gives the LMT84 the ability to sink and source significant current. This is beneficial when, for example, driving dynamic loads like an input stage on an analog-to-digital converter (ADC). In these applications the source current is required to quickly charge the input capacitor of the ADC. The LMT84 is ideal for this and other applications which require strong source or sink current.

The LMT84 supply-noise gain (the ratio of the AC signal on $V_{OUT}$ to the AC signal on $V_{DD}$) was measured during bench tests. The typical attenuation is shown in Figure 8 found in the *Typical Characteristics* section. A load capacitor on the output can help to filter noise.

For operation in very noisy environments, some bypass capacitance should be present on the supply within approximately 5 centimeters of the LMT84.

Copyright © 2013–2017, Texas Instruments Incorporated

## Device Functional Modes (continued)

### 8.4.3 Capacitive Loads

The LMT84 handles capacitive loading well. In an extremely noisy environment, or when driving a switched sampling input on an ADC, it may be necessary to add some filtering to minimize noise coupling. Without any precautions, the LMT84 can drive a capacitive load less than or equal to 1100 pF as shown in Figure 11. For capacitive loads greater than 1100 pF, a series resistor may be required on the output, as shown in Figure 12.

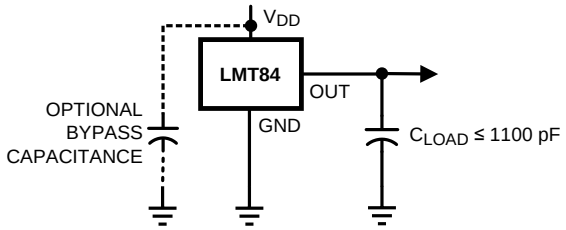


**Figure 11. LMT84 No Decoupling Required for Capacitive Loads Less Than 1100 pF**

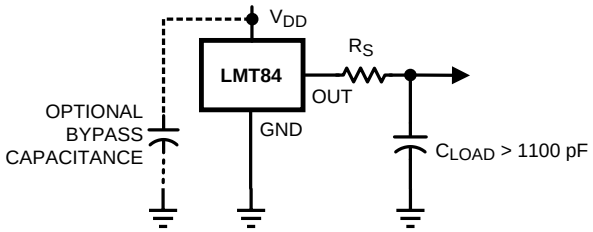


**Figure 12. LMT84 With Series Resistor for Capacitive Loading Greater Than 1100 pF**

**Table 4. Recommended Series Resistor Values**

| $C_{LOAD}$ | MINIMUM $R_S$ |
|---|---|
| 1.1 nF to 99 nF | 3 kΩ |
| 100 nF to 999 nF | 1.5 kΩ |
| 1 µF | 800 Ω |

### 8.4.4 Output Voltage Shift

The LMT84 is very linear over temperature and supply voltage range. Due to the intrinsic behavior of an NMOS or PMOS rail-to-rail buffer, a slight shift in the output can occur when the supply voltage is ramped over the operating range of the device. The location of the shift is determined by the relative levels of $V_{DD}$ and $V_{OUT}$. The shift typically occurs when $V_{DD} – V_{OUT} = 1$ V.

This slight shift (a few millivolts) takes place over a wide change (approximately 200 mV) in $V_{DD}$ or $V_{OUT}$. Because the shift takes place over a wide temperature change of 5°C to 20°C, $V_{OUT}$ is always monotonic. The accuracy specifications in the *Accuracy Characteristics* table already include this possible shift.


Copyright © 2013–2017, Texas Instruments Incorporated

# 9 Application and Implementation

**NOTE**

Information in the following applications sections is not part of the TI component specification, and TI does not warrant its accuracy or completeness. TI's customers are responsible for determining suitability of components for their purposes. Customers should validate and test their design implementation to confirm system functionality.

## 9.1 Applications Information

The LMT84 features make it suitable for many general temperature-sensing applications. It can operate down to 1.5-V supply with 5.4-µA power consumption, making it ideal for battery-powered devices. Package options like the through-hole TO-92 package allow the LMT84 to be mounted onboard, off-board, to a heat sink, or on multiple unique locations in the same application.

## 9.2 Typical Applications

### 9.2.1 Connection to an ADC

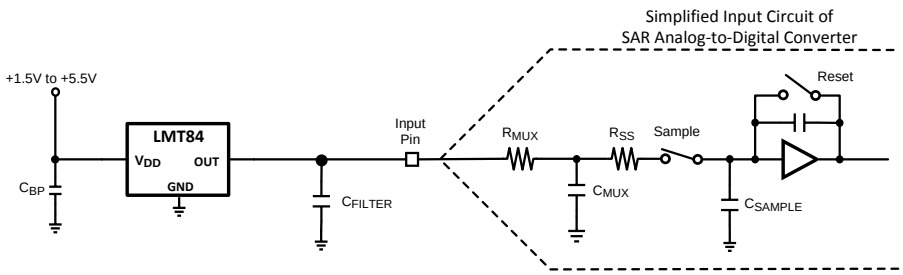


**Figure 13. Suggested Connection to a Sampling Analog-to-Digital Converter Input Stage**

#### *9.2.1.1 Design Requirements*

Most CMOS ADCs found in microcontrollers and ASICs have a sampled data comparator input structure. When the ADC charges the sampling cap, it requires instantaneous charge from the output of the analog source such as the LMT84 temperature sensor and many op amps. This requirement is easily accommodated by the addition of a capacitor ($C_{FILTER}$).

#### *9.2.1.2 Detailed Design Procedure*

The size of $C_{FILTER}$ depends on the size of the sampling capacitor and the sampling frequency. Because not all ADCs have identical input stages, the charge requirements will vary. This general ADC application is shown as an example only.

#### *9.2.1.3 Application Curve*

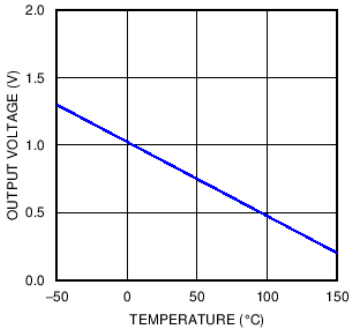


**Figure 14. Analog Output Transfer Function**

## Typical Applications (continued)

### 9.2.2 Conserving Power Dissipation With Shutdown

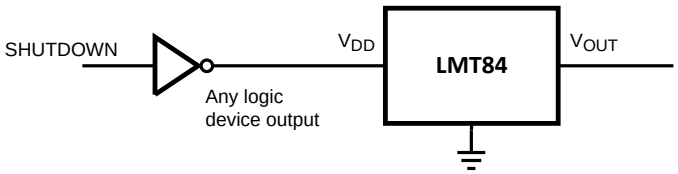


**Figure 15. Simple Shutdown Connection of the LMT84**

#### *9.2.2.1 Design Requirements*

Because the power consumption of the LMT84 is less than 9 µA, it can simply be powered directly from any logic gate output and therefore not require a specific shutdown pin. The device can even be powered directly from a microcontroller GPIO. In this way, it can easily be turned off for cases such as battery-powered systems where power savings are critical.

#### *9.2.2.2 Detailed Design Procedure*

Simply connect the $V_{DD}$ pin of the LMT84 directly to the logic shutdown signal from a microcontroller.

#### *9.2.2.3 Application Curves*

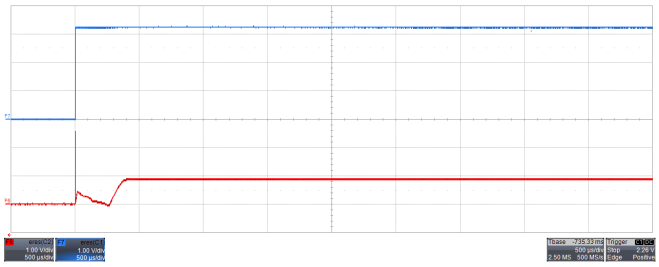

Time: 500 µs/div; Top trace: $V_{DD}$ 1 V/div;
Bottom trace: OUT 1 V/div

**Figure 16. Output Turnon Response Time Without a Capacitive Load and $V_{DD}$= 3.3 V**

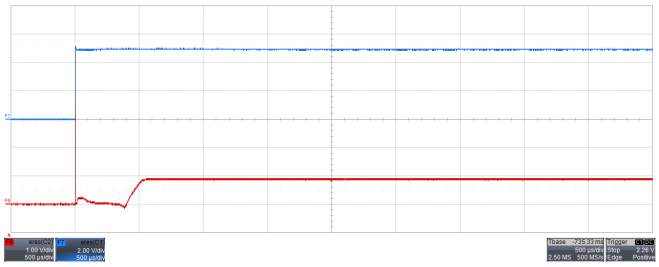

Time: 500 µs/div; Top trace: $V_{DD}$ 2 V/div;
Bottom trace: OUT 1 V/div

**Figure 17. Output Turnon Response Time Without a Capacitive Load and $V_{DD}$= 5 V**

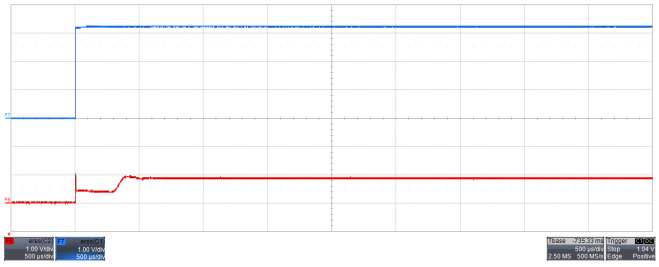

Time: 500 µs/div; Top trace: $V_{DD}$ 1 V/div;
Bottom trace: OUT 1 V/div

**Figure 18. Output Turnon Response Time With 1.1-Nf Capacitive Load and $V_{DD}$= 3.3 V**

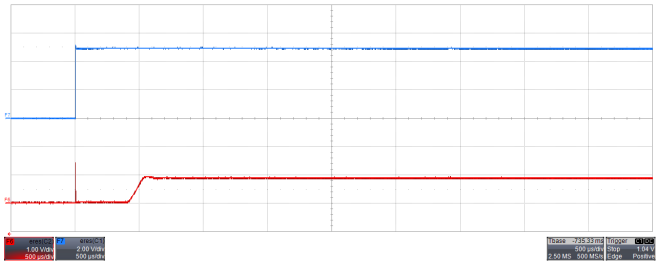

Time: 500 µs/div; Top trace: $V_{DD}$ 2 V/div;
Bottom trace: OUT 1 V/div

**Figure 19. Output Turnon Response Time With 1.1-Nf Capacitive Load and $V_{DD}$= 5 V**

## 10 Power Supply Recommendations

The low supply current and supply range (1.5 V to 5.5 V) of the LMT84 allow the device to easily be powered from many sources. Power supply bypassing is optional and is mainly dependent on the noise on the power supply used. In noisy systems, it may be necessary to add bypass capacitors to lower the noise that is coupled to the output of the LMT84.


Copyright © 2013–2017, Texas Instruments Incorporated

# 11 Layout

## 11.1 Layout Guidelines

The LMT84 is extremely simple to layout. If a power-supply bypass capacitor is used, is should be connected as shown in the *Layout Examples*.

## 11.2 Layout Examples

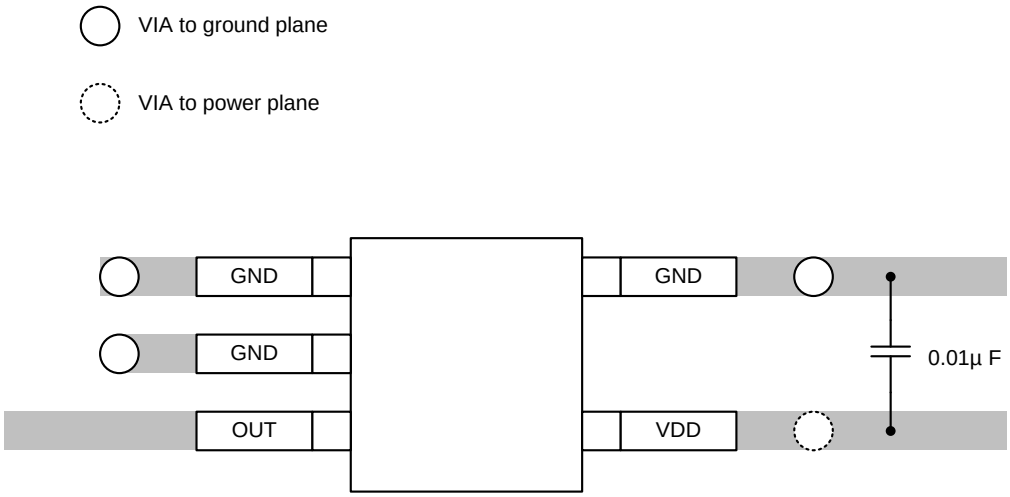


**Figure 20. SC70 Package Recommended Layout**

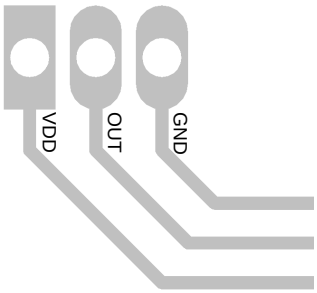


**Figure 21. TO-92 LP Package Recommended Layout**

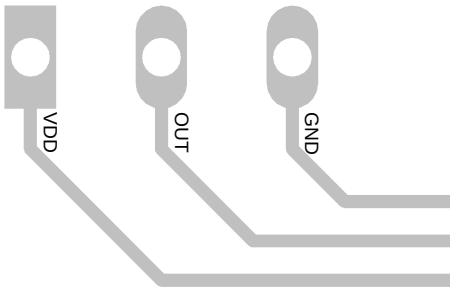


**Figure 22. TO-92 LPM Package Recommended Layout**

# 12 器件和文档支持

## 12.1 接收文档更新通知

要接收文档更新通知，请导航至 TI.com 上的器件产品文件夹。单击右上角的*通知我* 进行注册，即可每周接收产品信息更改摘要。有关更改的详细信息，请查看任何已修订文档中包含的修订历史记录。

## 12.2 社区资源

下列链接提供到 TI 社区资源的连接。链接的内容由各个分销商"按照原样"提供。这些内容并不构成 TI 技术规范，并且不一定反映 TI 的观点；请参阅 TI 的 《使用条款》。

**TI E2E™ 在线社区** ***TI 的工程师对工程师 (E2E) 社区。***此社区的创建目的在于促进工程师之间的协作。在 e2e.ti.com 中，您可以咨询问题、分享知识、拓展思路并与同行工程师一道帮助解决问题。

**设计支持** ***TI 参考设计支持*** 可帮助您快速查找有帮助的 E2E 论坛、设计支持工具以及技术支持的联系信息。

## 12.3 商标

E2E is a trademark of Texas Instruments.
All other trademarks are the property of their respective owners.

## 12.4 静电放电警告

这些装置包含有限的内置 ESD 保护。 存储或装卸时，应将导线一起截短或将装置放置于导电泡棉中，以防止 MOS 门极遭受静电损伤。

## 12.5 Glossary

SLYZ022 — *TI Glossary*.

This glossary lists and explains terms, acronyms, and definitions.

# 13 机械、封装和可订购信息

以下页面包含机械、封装和可订购信息。这些信息是指定器件的最新可用数据。这些数据如有变更，恕不另行通知和修订此文档。如欲获取此数据表的浏览器版本，请参阅左侧的导航。


版权 © 2013–2017, Texas Instruments Incorporated

## PACKAGING INFORMATION

| Orderable Device | Status (1) | Package Type | Package Drawing | Pins | Package Qty | Eco Plan (2) | Lead finish/ Ball material (6) | MSL Peak Temp (3) | Op Temp (°C) | Device Marking (4/5) | Samples |
|---|---|---|---|---|---|---|---|---|---|---|---|
| LMT84DCKR | ACTIVE | SC70 | DCK | 5 | 3000 | RoHS & Green | SN | Level-1-260C-UNLIM | -50 to 150 | BNA | Samples |
| LMT84DCKT | ACTIVE | SC70 | DCK | 5 | 250 | RoHS & Green | SN | Level-1-260C-UNLIM | -50 to 150 | BNA | Samples |
| LMT84LP | ACTIVE | TO-92 | LP | 3 | 1800 | RoHS & Green | SN | N / A for Pkg Type | -50 to 150 | LMT84 | Samples |
| LMT84LPG | ACTIVE | TO-92 | LPG | 3 | 1000 | RoHS & Green | SN | N / A for Pkg Type | -50 to 150 | LMT84 | Samples |
| LMT84LPGM | ACTIVE | TO-92 | LPG | 3 | 3000 | RoHS & Green | SN | N / A for Pkg Type | -50 to 150 | LMT84 | Samples |
| LMT84LPM | ACTIVE | TO-92 | LP | 3 | 2000 | RoHS & Green | SN | N / A for Pkg Type | -50 to 150 | LMT84 | Samples |

(1) The marketing status values are defined as follows:
**ACTIVE:** Product device recommended for new designs.
**LIFEBUY:** TI has announced that the device will be discontinued, and a lifetime-buy period is in effect.
**NRND:** Not recommended for new designs. Device is in production to support existing customers, but TI does not recommend using this part in a new design.
**PREVIEW:** Device has been announced but is not in production. Samples may or may not be available.
**OBSOLETE:** TI has discontinued the production of the device.

(2) **RoHS:** TI defines "RoHS" to mean semiconductor products that are compliant with the current EU RoHS requirements for all 10 RoHS substances, including the requirement that RoHS substance do not exceed 0.1% by weight in homogeneous materials. Where designed to be soldered at high temperatures, "RoHS" products are suitable for use in specified lead-free processes. TI may reference these types of products as "Pb-Free".
**RoHS Exempt:** TI defines "RoHS Exempt" to mean products that contain lead but are compliant with EU RoHS pursuant to a specific EU RoHS exemption.
**Green:** TI defines "Green" to mean the content of Chlorine (Cl) and Bromine (Br) based flame retardants meet JS709B low halogen requirements of <=1000ppm threshold. Antimony trioxide based flame retardants must also meet the <=1000ppm threshold requirement.

(3) MSL, Peak Temp. - The Moisture Sensitivity Level rating according to the JEDEC industry standard classifications, and peak solder temperature.

(4) There may be additional marking, which relates to the logo, the lot trace code information, or the environmental category on the device.

(5) Multiple Device Markings will be inside parentheses. Only one Device Marking contained in parentheses and separated by a "~" will appear on a device. If a line is indented then it is a continuation of the previous line and the two combined represent the entire Device Marking for that device.

(6) Lead finish/Ball material - Orderable Devices may have multiple material finish options. Finish options are separated by a vertical ruled line. Lead finish/Ball material values may wrap to two lines if the finish value exceeds the maximum column width.

**Important Information and Disclaimer:**The information provided on this page represents TI's knowledge and belief as of the date that it is provided. TI bases its knowledge and belief on information provided by third parties, and makes no representation or warranty as to the accuracy of such information. Efforts are underway to better integrate information from third parties. TI has taken and continues to take reasonable steps to provide representative and accurate information but may not have conducted destructive testing or chemical analysis on incoming materials and chemicals. TI and TI suppliers consider certain information to be proprietary, and thus CAS numbers and other limited information may not be available for release.

In no event shall TI's liability arising out of such information exceed the total purchase price of the TI part(s) at issue in this document sold by TI to Customer on an annual basis.

## TAPE AND REEL INFORMATION

**REEL DIMENSIONS**

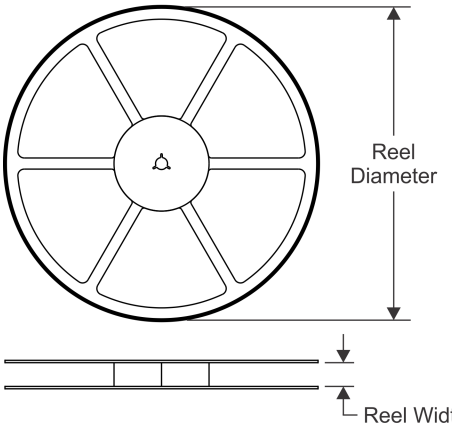


**TAPE DIMENSIONS**

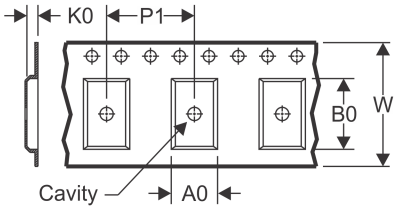


| | |
|---|---|
| A0 | Dimension designed to accommodate the component width |
| B0 | Dimension designed to accommodate the component length |
| K0 | Dimension designed to accommodate the component thickness |
| W | Overall width of the carrier tape |
| P1 | Pitch between successive cavity centers |

**QUADRANT ASSIGNMENTS FOR PIN 1 ORIENTATION IN TAPE**

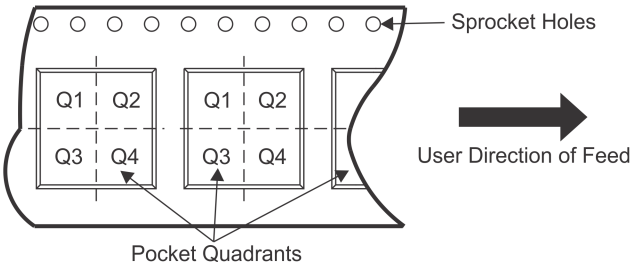


*All dimensions are nominal

| Device | Package Type | Package Drawing | Pins | SPQ | Reel Diameter (mm) | Reel Width W1 (mm) | A0 (mm) | B0 (mm) | K0 (mm) | P1 (mm) | W (mm) | Pin1 Quadrant |
|---|---|---|---|---|---|---|---|---|---|---|---|---|
| LMT84DCKR | SC70 | DCK | 5 | 3000 | 178.0 | 8.4 | 2.25 | 2.45 | 1.2 | 4.0 | 8.0 | Q3 |
| LMT84DCKT | SC70 | DCK | 5 | 250 | 178.0 | 8.4 | 2.25 | 2.45 | 1.2 | 4.0 | 8.0 | Q3 |

**TAPE AND REEL BOX DIMENSIONS**

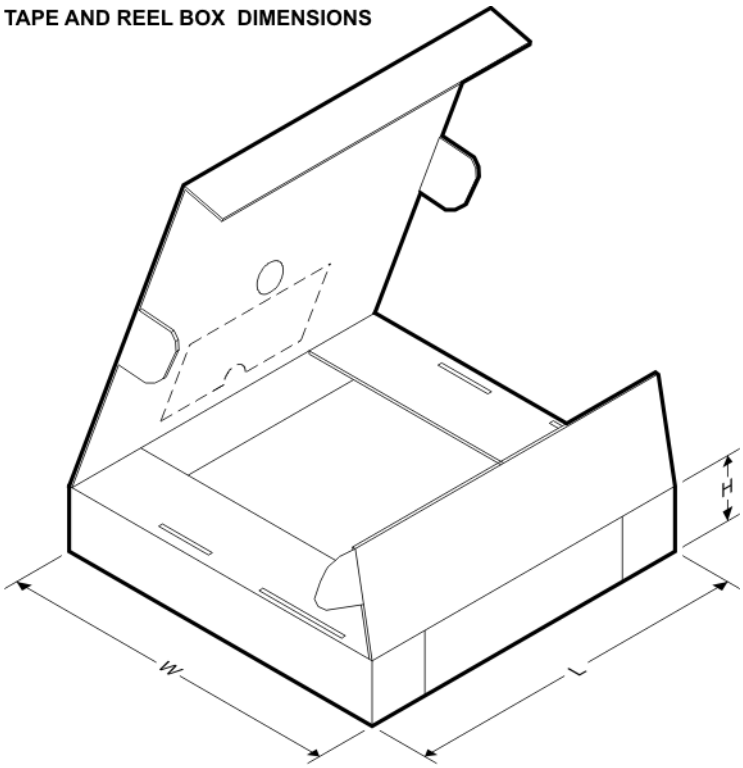


*All dimensions are nominal

| Device | Package Type | Package Drawing | Pins | SPQ | Length (mm) | Width (mm) | Height (mm) |
|---|---|---|---|---|---|---|---|
| LMT84DCKR | SC70 | DCK | 5 | 3000 | 208.0 | 191.0 | 35.0 |
| LMT84DCKT | SC70 | DCK | 5 | 250 | 208.0 | 191.0 | 35.0 |

DCK (R–PDSO–G5) PLASTIC SMALL–OUTLINE PACKAGE

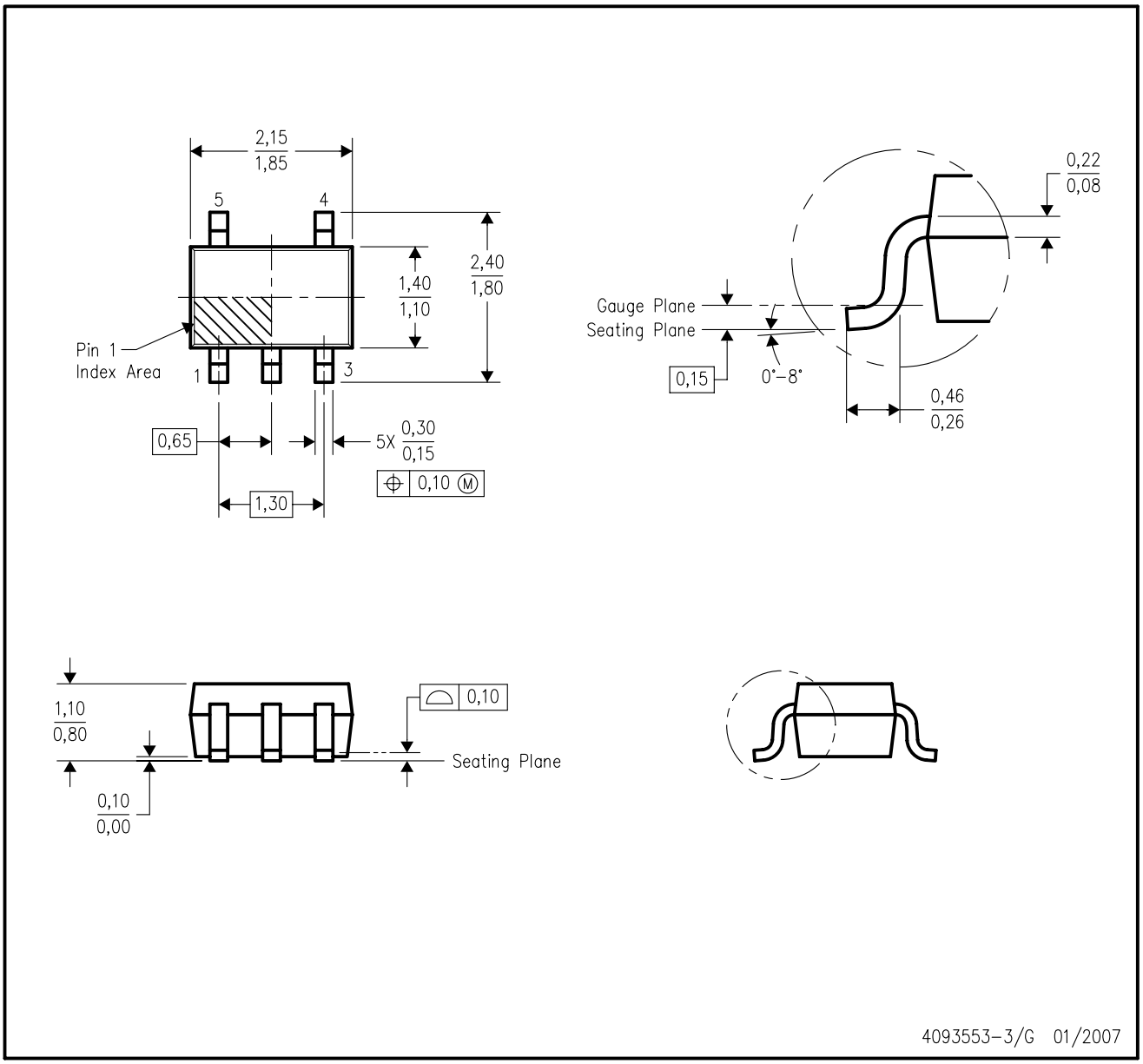


NOTES:
A. All linear dimensions are in millimeters.
B. This drawing is subject to change without notice.
C. Body dimensions do not include mold flash or protrusion. Mold flash and protrusion shall not exceed 0.15 per side.
D. Falls within JEDEC MO–203 variation AA.

DCK (R-PDSO-G5) PLASTIC SMALL OUTLINE

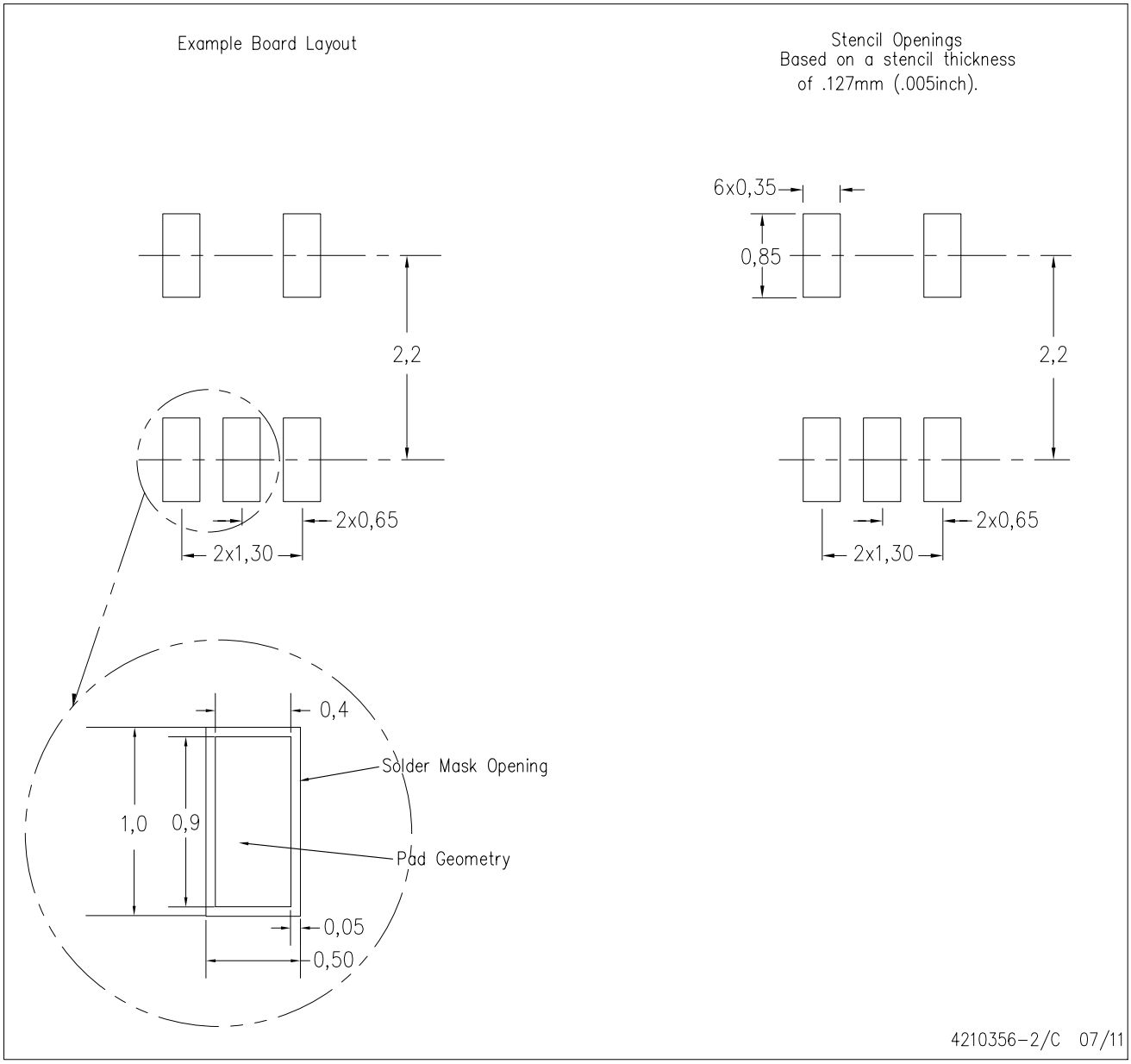


NOTES:
A. All linear dimensions are in millimeters.
B. This drawing is subject to change without notice.
C. Customers should place a note on the circuit board fabrication drawing not to alter the center solder mask defined pad.
D. Publication IPC-7351 is recommended for alternate designs.
E. Laser cutting apertures with trapezoidal walls and also rounding corners will offer better paste release. Customers should contact their board assembly site for stencil design recommendations. Example stencil design based on a 50% volumetric metal load solder paste. Refer to IPC-7525 for other stencil recommendations.

# PACKAGE OUTLINE

## LPG0003A

## TO-92 - 5.05 mm max height

TRANSISTOR OUTLINE

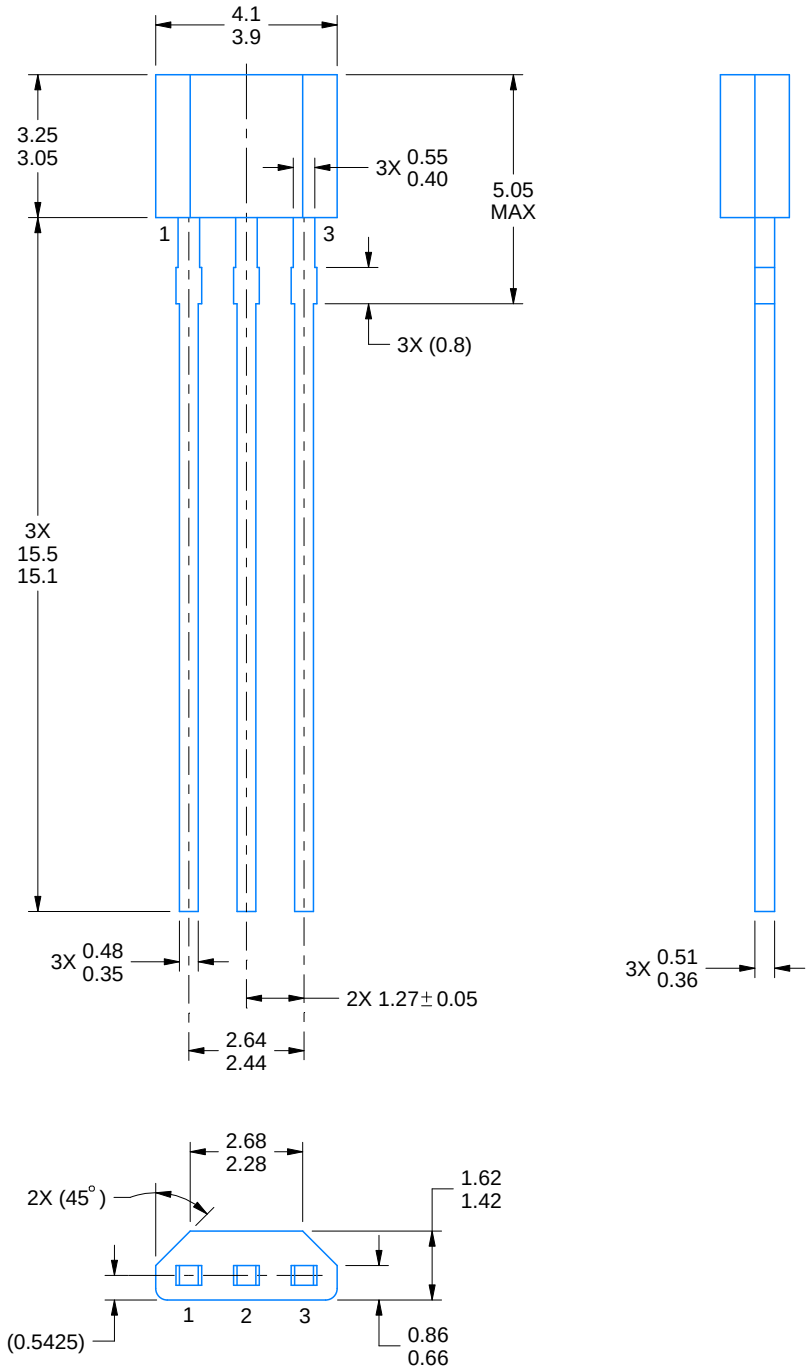


4221343/C 01/2018

NOTES:

1. All linear dimensions are in millimeters. Any dimensions in parenthesis are for reference only. Dimensioning and tolerancing per ASME Y14.5M.
2. This drawing is subject to change without notice.

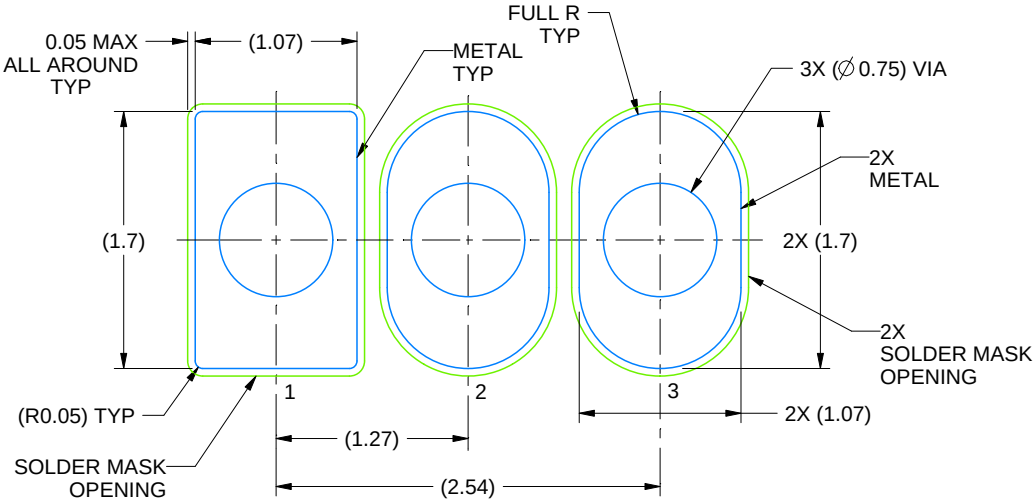


LAND PATTERN EXAMPLE
NON-SOLDER MASK DEFINED
SCALE:20X

4221343/C 01/2018

TRANSISTOR OUTLINE

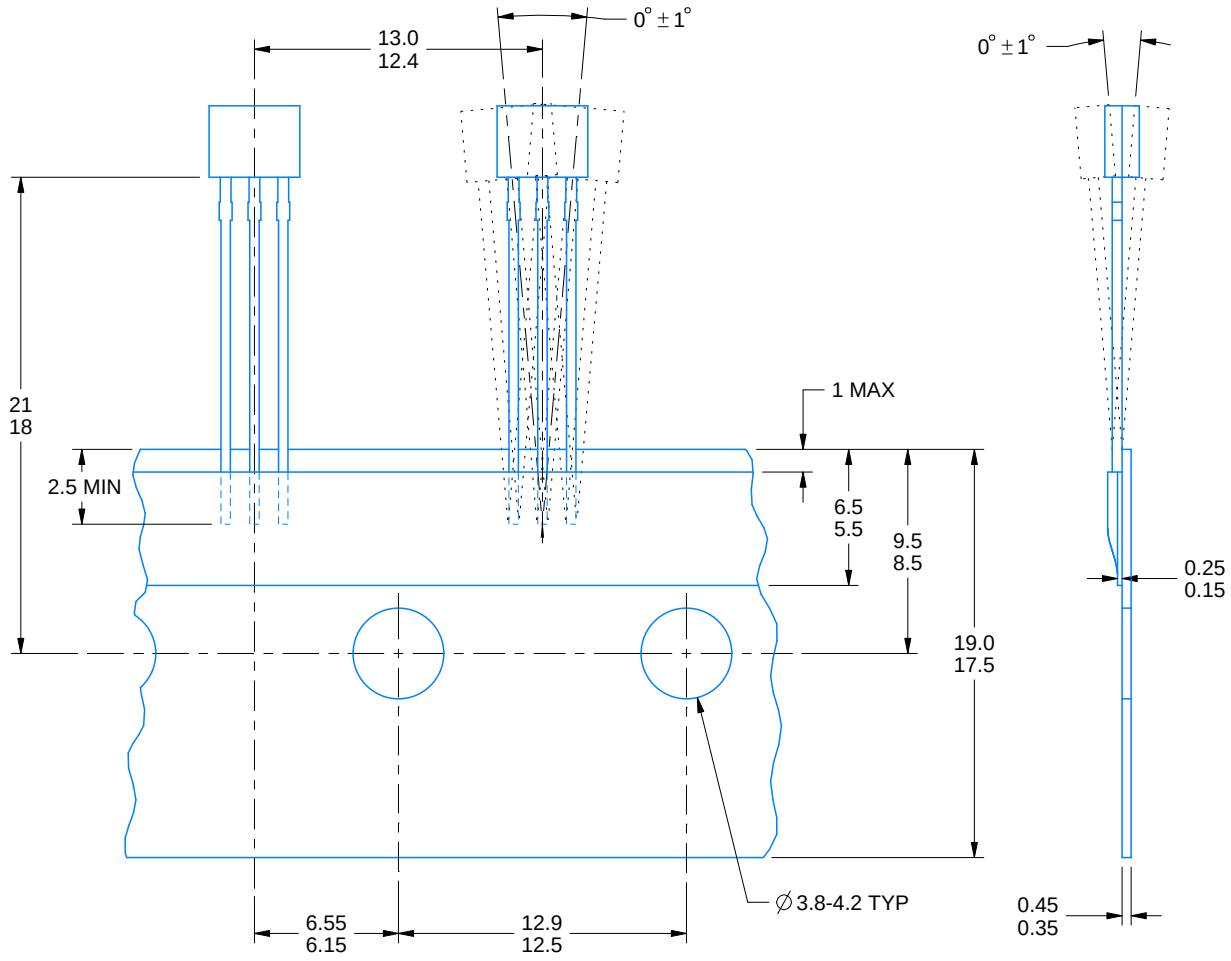


4221343/C 01/2018

Images above are just a representation of the package family, actual package may vary.
Refer to the product data sheet for package details.

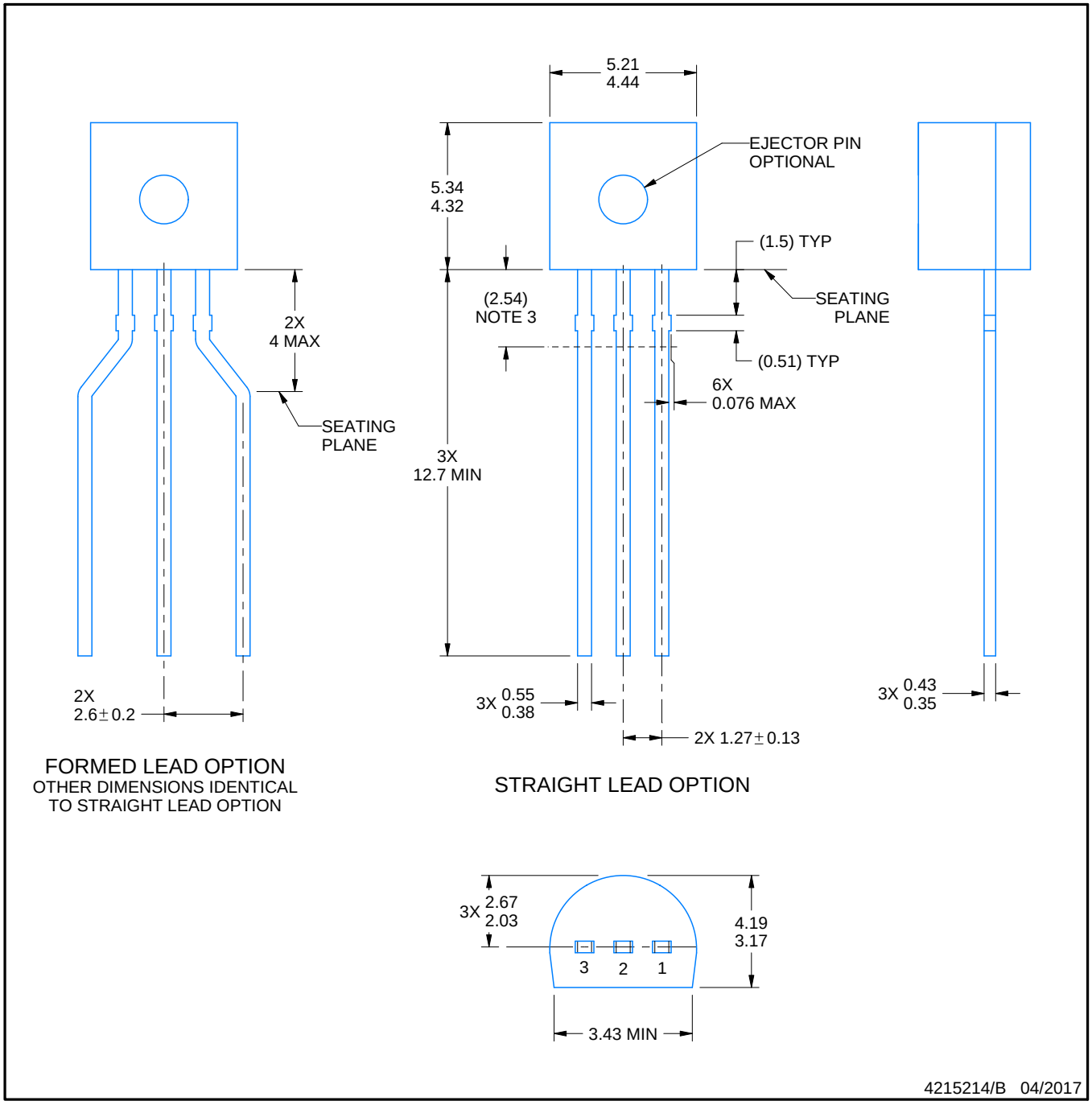


NOTES:

1. All linear dimensions are in millimeters. Any dimensions in parenthesis are for reference only. Dimensioning and tolerancing per ASME Y14.5M.
2. This drawing is subject to change without notice.
3. Lead dimensions are not controlled within this area.
4. Reference JEDEC TO-226, variation AA.
5. Shipping method:
   a. Straight lead option available in bulk pack only.
   b. Formed lead option available in tape and reel or ammo pack.
   c. Specific products can be offered in limited combinations of shipping medium and lead options.
   d. Consult product folder for more information on available options.

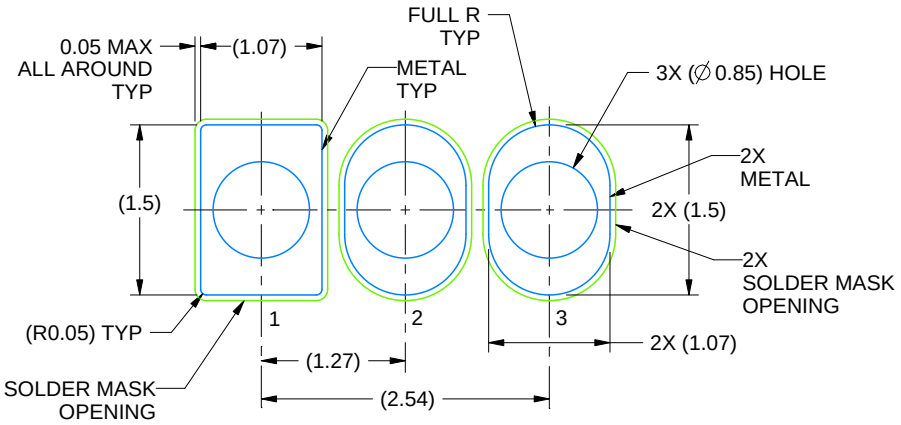


LAND PATTERN EXAMPLE
STRAIGHT LEAD OPTION
NON-SOLDER MASK DEFINED
SCALE:15X

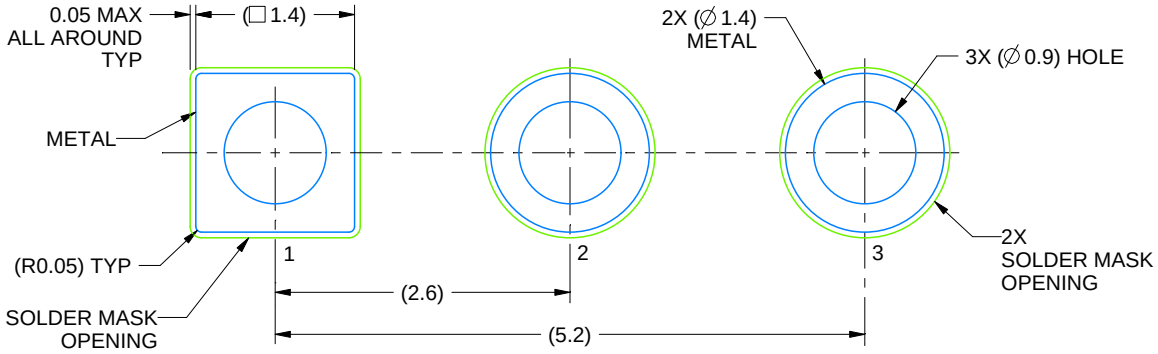


LAND PATTERN EXAMPLE
FORMED LEAD OPTION
NON-SOLDER MASK DEFINED
SCALE:15X

4215214/B 04/2017

TO-92

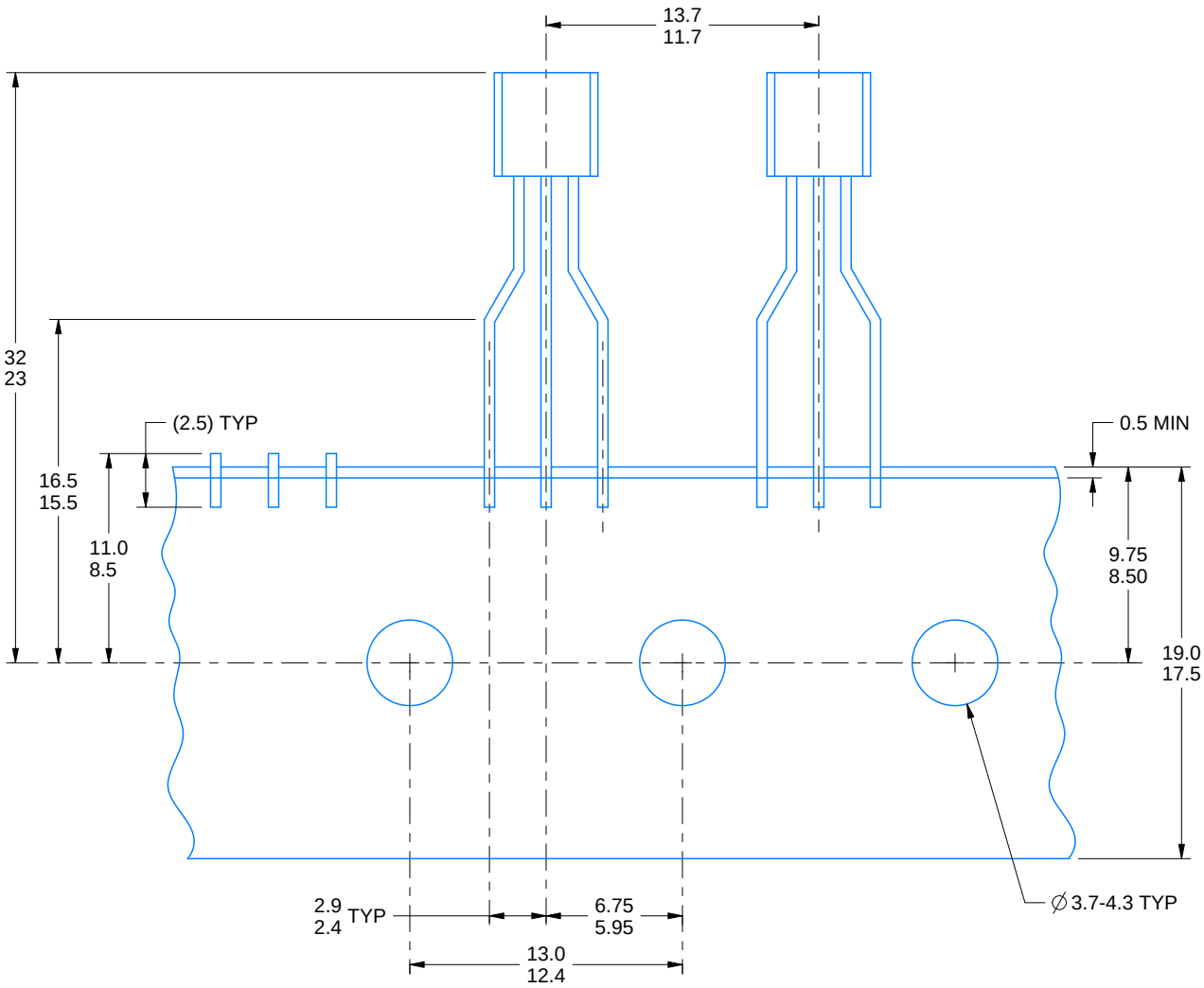


FOR FORMED LEAD OPTION PACKAGE

4215214/B 04/2017

# 重要声明和免责声明

TI“按原样”提供技术和可靠性数据（包括数据表）、设计资源（包括参考设计）、应用或其他设计建议、网络工具、安全信息和其他资源，不保证没有瑕疵且不做出任何明示或暗示的担保，包括但不限于对适销性、某特定用途方面的适用性或不侵犯任何第三方知识产权的暗示担保。

这些资源可供使用 TI 产品进行设计的熟练开发人员使用。您将自行承担以下全部责任：(1) 针对您的应用选择合适的 TI 产品，(2) 设计、验证并测试您的应用，(3) 确保您的应用满足相应标准以及任何其他功能安全、信息安全、监管或其他要求。

这些资源如有变更，恕不另行通知。TI 授权您仅可将这些资源用于研发本资源所述的 TI 产品的应用。严禁对这些资源进行其他复制或展示。您无权使用任何其他 TI 知识产权或任何第三方知识产权。您应全额赔偿因在这些资源的使用中对 TI 及其代表造成的任何索赔、损害、成本、损失和债务，TI 对此概不负责。

TI 提供的产品受 TI 的销售条款或 ti.com 上其他适用条款/TI 产品随附的其他适用条款的约束。TI 提供这些资源并不会扩展或以其他方式更改 TI 针对 TI 产品发布的适用的担保或担保免责声明。

TI 反对并拒绝您可能提出的任何其他或不同的条款。

邮寄地址：Texas Instruments, Post Office Box 655303, Dallas, Texas 75265
Copyright © 2021，德州仪器 (TI) 公司