# LP2998/LP2998-Q1 DDR Termination Regulator

## 1 Features

- AEC-Q100 Test Guidance with the following results (SO PowerPAD-8):
  - Device HBM ESD Classification Level H1C
  - Junction Temperature Range –40°C to 125°C
- 1.35 V Minimum $V_{DDQ}$
- Source and Sink Current
- Low Output Voltage Offset
- No External Resistors Required
- Linear Topology
- Suspend to Ram (STR) Functionality
- Low External Component Count
- Thermal Shutdown

## 2 Applications

- DDR1, DDR2, DDR3, and DDR3L Termination Voltage
- Automotive Infotainment
- FPGA
- Industrial/Medical PC
- SSTL-18, SSTL-2, and SSTL-3 Termination
- HSTL Termination

## 3 Description

The LP2998 linear regulator is designed to meet JEDEC SSTL-2 and JEDEC SSTL-18 specifications for termination of DDR-SDRAM and DDR2 memory. The device also supports DDR3 and DDR3L VTT bus termination with $V_{DDQ}$ min of 1.35 V. The device contains a high-speed operational amplifier to provide excellent response to load transients. The output stage prevents shoot through while delivering 1.5 A continuous current and transient peaks up to 3 A in the application as required for DDR-SDRAM termination. The LP2998 also incorporates a VSENSE pin to provide superior load regulation and a $V_{REF}$ output as a reference for the chipset and DIMMs.

An additional feature found on the LP2998 is an active low shutdown ($\overline{SD}$) pin that provides Suspend To RAM (STR) functionality. When $\overline{SD}$ is pulled low the $V_{TT}$ output will tri-state providing a high impedance output, but, $V_{REF}$ will remain active. A power savings advantage can be obtained in this mode through lower quiescent current.

**Device Information(1)**

| PART NUMBER | PACKAGE | BODY SIZE (NOM) |
|---|---|---|
| LP2998 | SO PowerPAD™ (8) | 4.89 mm x 3.90 mm |
| LP2998 | SOIC (8) | 4.90 mm x 3.91 mm |
| LP2998-Q1 | SO PowerPAD™ (8) | 4.89 mm x 3.90 mm |

(1) For all available packages, see the orderable addendum at the end of the datasheet.

## 4 Simplified Schematic

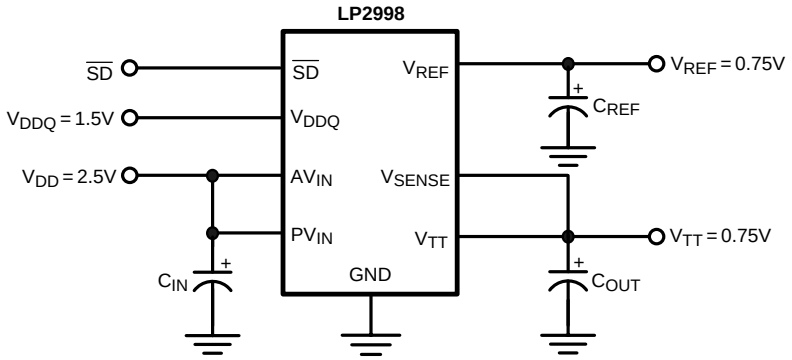


An IMPORTANT NOTICE at the end of this data sheet addresses availability, warranty, changes, use in safety-critical applications, intellectual property matters and other important disclaimers. PRODUCTION DATA.

## Table of Contents

**1 Features** ... 1
**2 Applications** ... 1
**3 Description** ... 1
**4 Simplified Schematic** ... 1
**5 Revision History** ... 2
**6 Pin Configuration and Functions** ... 3
6.1 Pin Descriptions ... 3
**7 Specifications** ... 5
7.1 Absolute Maximum Ratings ... 5
7.2 Handling Ratings: LP2998 ... 5
7.3 Handling Ratings: LP2998-Q1 ... 5
7.4 Recommended Operating Conditions ... 5
7.5 Thermal Information ... 5
7.6 Electrical Characteristics ... 6
7.7 Typical Characteristics ... 8
**8 Detailed Description** ... 11
8.1 Overview ... 11
8.2 Functional Block Diagram ... 11
8.3 Feature Description ... 11
8.4 Device Functional Modes ... 11
**9 Application and Implementation** ... 13
9.1 Application Information ... 13
9.2 Typical Application ... 15
**10 Power Supply Recommendations** ... 20
**11 Layout** ... 20
11.1 Layout Guidelines ... 20
11.2 Layout Examples ... 21
**12 Device and Documentation Support** ... 22
12.1 Related Links ... 22
12.2 Trademarks ... 22
12.3 Electrostatic Discharge Caution ... 22
12.4 Glossary ... 22
**13 Mechanical, Packaging, and Orderable Information** ... 22

## 5 Revision History

NOTE: Page numbers for previous revisions may differ from page numbers in the current version.

| Changes from Revision J (December 2013) to Revision K | Page |
|---|---|
| • Added DDR3 support throughout datasheet | 1 |
| • Changed formatting to match new TI datasheet guidelines; added Device Information and Handling Ratings tables, Power Supply, Layout Examples, and Device and Documentation Support sections; reformatted Detailed Description and Application and Implementation sections. | 1 |
| • Changed Electrical Char table condition statement | 6 |
| • Changed Electrical Char table condition statement | 7 |

| Changes from Revision I (April 2013) to Revision J | Page |
|---|---|
| • Added AEC-Q100 Test Guidance | 1 |
| • Changed layout of National Data Sheet to TI format | 20 |


Copyright © 2007–2014, Texas Instruments Incorporated

# 6 Pin Configuration and Functions

**SO PowerPAD**
**8-LEAD DDA**
**TOP VIEW**

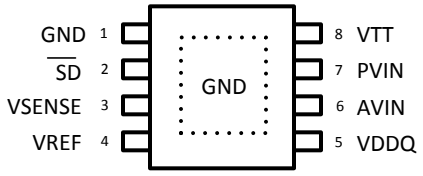


**SOIC**
**8-LEAD D**
**TOP VIEW**

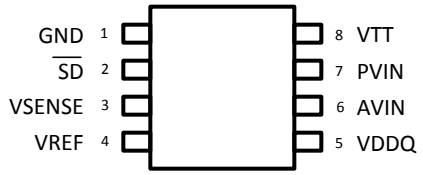


**Pin Functions**

| PIN | | |
|---|---|---|
| **NUMBER** | **TYPE** | **DESCRIPTION** |
| 1 | GND | Ground |
| 2 | $\overline{SD}$ | Shutdown |
| 3 | VSENSE | Feedback pin for regulating $V_{TT}$. |
| 4 | VREF | Buffered internal reference voltage of $V_{DDQ}/2$ |
| 5 | VDDQ | Input for internal reference equal to $V_{DDQ}/2$ |
| 6 | AVIN | Analog input pin |
| 7 | PVIN | Power input pin |
| 8 | VTT | Output voltage for connection to termination resistors |
| | EP | Exposed pad thermal connection. Connect to Ground. |

## 6.1 Pin Descriptions

| | |
|---|---|
| **AVIN AND PVIN** | AVIN and PVIN are the input supply pins for the LP2998. AVIN is used to supply all the internal control circuitry. PVIN, however, is used exclusively to provide the rail voltage for the output stage used to create VTT. These pins have the capability to work off separate supplies depending on the application. Higher voltages on PVIN will increase the maximum continuous output current because of output RDSON limitations at voltages close to VTT. The disadvantage of high values of PVIN is that the internal power loss will also increase, thermally limiting the design. For SSTL-2 applications, a good compromise would be to connect the AVIN and PVIN directly together at 2.5 V. This eliminates the need for bypassing the two supply pins separately. The only limitation on input voltage selection is that PVIN must be equal to or lower than AVIN. It is recommended to connect PVIN to voltage rails equal to or less than 3.3 V to prevent the thermal limit from tripping because of excessive internal power dissipation. If the junction temperature exceeds the thermal shutdown than the part will enter a shutdown state identical to the manual shutdown where $V_{TT}$ is tri-stated and $V_{REF}$ remains active. |
| **VDDQ** | VDDQ is the input used to create the internal reference voltage for regulating $V_{TT}$. The reference voltage is generated from a resistor divider of two internal 50 kΩ resistors. This ensures that $V_{TT}$ will track VDDQ / 2 precisely. The optimal implementation of VDDQ is as a remote sense. This can be achieved by connecting VDDQ directly to the 2.5 V rail at the DIMM instead of AVIN and PVIN. This ensures that the reference voltage tracks the DDR memory rails precisely without a large voltage drop from the power lines. For SSTL-2 applications VDDQ will be a 2.5 V signal, which will create a 1.25 V termination voltage at $V_{TT}$ (See *Electrical Characteristics* Table for exact values of $V_{TT}$ over temperature). |

Copyright © 2007–2014, Texas Instruments Incorporated

## Pin Descriptions (continued)

| | |
|---|---|
| **$V_{SENSE}$** | The purpose of the sense pin is to provide improved remote load regulation. In most motherboard applications the termination resistors will connect to $V_{TT}$ in a long plane. If the output voltage was regulated only at the output of the LP2998 then the long trace will cause a significant IR drop resulting in a termination voltage lower at one end of the bus than the other. The $V_{SENSE}$ pin can be used to improve this performance, by connecting it to the middle of the bus. This will provide a better distribution across the entire termination bus. If remote load regulation is not used then the $V_{SENSE}$ pin must still be connected to $V_{TT}$. Care should be taken when a long $V_{SENSE}$ trace is implemented in close proximity to the memory. Noise pickup in the $V_{SENSE}$ trace can cause problems with precise regulation of $V_{TT}$. A small 0.1 uF ceramic capacitor placed next to the $V_{SENSE}$ pin can help filter any high frequency signals and preventing errors. |
| **SHUTDOWN** | The LP2998 contains an active low shutdown pin that can be used to tri-state VTT. During shutdown $V_{TT}$ should not be exposed to voltages that exceed AVIN. With the shutdown pin asserted low the quiescent current of the LP2998 will drop, however, $V_{DDQ}$ will always maintain its constant impedance of 100 kΩ for generating the internal reference. Therefore, to calculate the total power loss in shutdown both currents need to be considered. For more information refer to the *Thermal Dissipation* section. The shutdown pin also has an internal pull-up current, therefore to turn the part on the shutdown pin can either be connected to AVIN or left open. |
| **$V_{REF}$** | $V_{REF}$ provides the buffered output of the internal reference voltage VDDQ / 2. This output should be used to provide the reference voltage for the Northbridge chipset and memory. Since these inputs are typically an extremely high impedance, there should be little current drawn from $V_{REF}$. For improved performance, an output bypass capacitor can be used, located close to the pin, to help with noise. A ceramic capacitor in the range of 0.1 µF to 0.01 µF is recommended. This output remains active during the shutdown state and thermal shutdown events for the suspend to RAM functionality. |
| **$V_{TT}$** | $V_{TT}$ is the regulated output that is used to terminate the bus resistors. It is capable of sinking and sourcing current while regulating the output precisely to VDDQ / 2. The LP2998 is designed to handle peak transient currents of up to ± 3 A with a fast transient response. The maximum continuous current is a function of $V_{IN}$ and can be viewed in the *Typical Characteristics* section. If a transient is expected to last above the maximum continuous current rating for a significant amount of time then the output capacitor should be sized large enough to prevent an excessive voltage drop. Despite the fact that the LP2998 is designed to handle large transient output currents it is not capable of handling these for long durations, under all conditions. The reason for this is the standard packages are not able to thermally dissipate the heat as a result of the internal power loss. If large currents are required for longer durations, then care should be taken to ensure that the maximum junction temperature is not exceeded. Proper thermal derating should always be used (please refer to the *Thermal Dissipation* section). If the junction temperature exceeds the thermal shutdown point than $V_{TT}$ will tri-state until the part returns below the hysteretic trip-point. |


Copyright © 2007–2014, Texas Instruments Incorporated

# 7 Specifications

## 7.1 Absolute Maximum Ratings (1)(2)

over operating free-air temperature range (unless otherwise noted)

| | MIN | MAX | UNIT |
|---|---|---|---|
| AVIN to GND | −0.3 | 6 | V |
| PVIN to GND | –0.3 | AVIN | V |
| VDDQ (3) | −0.3 | 6 | V |
| Junction temperature | | 150 | °C |
| Lead temperature (soldering, 10 sec) | | 260 | °C |

(1) Stresses beyond those listed under absolute maximum ratings may cause permanent damage to the device. These are stress ratings only, and functional operation of the device at these or any other conditions beyond those indicated under recommended operating conditions is not implied. Exposure to absolute–maximum–rated conditions for extended periods may affect device reliability.
(2) If Military/Aerospace specified devices are required, please contact the Texas Instruments Sales Office/Distributors for availability and specifications.
(3) VDDQ voltage must be less than 2 x (AVIN - 1) or 6V, whichever is smaller.

## 7.2 Handling Ratings: LP2998

| | | | MIN | MAX | UNIT |
|---|---|---|---|---|---|
| $T_{stg}$ | Storage temperature range | | −65 | 150 | °C |
| $V_{(ESD)}$ | Electrostatic discharge | Human body model (HBM), per ANSI/ESDA/JEDEC JS-001, all pins (1) | −1000 | 1000 | V |

(1) JEDEC document JEP155 states that 500-V HBM allows safe manufacturing with a standard ESD control process.

## 7.3 Handling Ratings: LP2998-Q1

| | | | MIN | MAX | UNIT |
|---|---|---|---|---|---|
| $T_{stg}$ | Storage temperature range | | −65 | 150 | °C |
| $V_{(ESD)}$ | Electrostatic discharge | Human body model (HBM), per AEC Q100-002 (1) | −1000 | 1000 | V |

(1) AEC Q100-002 indicates HBM stressing is done in accordance with the ANSI/ESDA/JEDEC JS-001 specification. The LP2998-Q1 is rated at AEC-Q100 ESD HBM Classification Level H1C.

## 7.4 Recommended Operating Conditions

over operating free-air temperature range (unless otherwise noted)

| | MIN | NOM | MAX | UNIT |
|---|---|---|---|---|
| Junction temperature (1) | –40 | | 125 | °C |
| AVIN to GND | 2.2 | | 5.5 | V |
| PVIN supply voltage | 0 | | AVIN | V |
| SD input voltage | 0 | | AVIN | V |

(1) At elevated temperatures, devices must be derated based on thermal resistance.

## 7.5 Thermal Information

| THERMAL METRIC (1) | | LP2998/LP2998-Q1 | LP2998 | UNIT |
|---|---|---|---|---|
| | | SO PowerPAD | SOIC | |
| | | 8 PINS | 8 PINS | |
| $R_{\theta JA}$ | Junction-to-ambient thermal resistance | 43 | 151 | °C/W |

(1) For more information about traditional and new thermal metrics, see the *IC Package Thermal Metrics* application report, SPRA953.

## 7.6 Electrical Characteristics

Typical limits tested at $T_J$ = 25°C. Minimum and maximum limits apply over the full operating junction temperature range ($T_J$ = –40°C to 125°C).[1] Unless otherwise specified, AVIN = PVIN = 2.5 V, VDDQ = 2.5 V.[2]

| PARAMETER | | TEST CONDITIONS | MIN | TYP | MAX | UNIT |
|---|---|---|---|---|---|---|
| $V_{REF}$ | $V_{REF}$ voltage (DDR I) | VIN = VDDQ = 2.3 V | 1.135 | 1.158 | 1.185 | V |
| | | VIN = VDDQ = 2.5 V | 1.235 | 1.258 | 1.285 | |
| | | VIN = VDDQ = 2.7 V | 1.335 | 1.358 | 1.385 | |
| | $V_{REF}$ voltage (DDR II) | PVIN = VDDQ = 1.7 V | 0.837 | 0.860 | 0.887 | |
| | | PVIN = VDDQ = 1.8 V | 0.887 | 0.910 | 0.937 | |
| | | PVIN = VDDQ = 1.9 V | 0.936 | 0.959 | 0.986 | |
| | $V_{REF}$ Voltage (DDR III) | PVIN = VDDQ = 1.35V | 0.669 | 0.684 | 0.699 | |
| | | PVIN = VDDQ = 1.5V | 0.743 | 0.758 | 0.773 | |
| | | PVIN = VDDQ = 1.6V | 0.793 | 0.808 | 0.823 | |
| $Z_{VREF}$ | $V_{REF}$ Output Impedance | $I_{REF}$ = –30 to 30 µA | | 2.5 | | kΩ |
| $V_{TT}$ | $V_{TT}$ Output Voltage (DDR I) [3] | $I_{OUT}$ = 0 A | | | | V |
| | | VIN = VDDQ = 2.3 V | 1.120 | 1.159 | 1.190 | |
| | | VIN = VDDQ = 2.5 V | 1.210 | 1.259 | 1.290 | |
| | | VIN = VDDQ = 2.7 V | 1.320 | 1.359 | 1.390 | |
| | | $I_{OUT}$ = ±1.5 A | | | | |
| | | VIN = VDDQ = 2.3 V | 1.125 | 1.159 | 1.190 | |
| | | VIN = VDDQ = 2.5 V | 1.225 | 1.259 | 1.290 | |
| | | VIN = VDDQ = 2.7 V | 1.325 | 1.359 | 1.390 | |
| | $V_{TT}$ Output Voltage (DDR II) [3] | $I_{OUT}$ = 0 A, AVIN = 2.5 V | | | | V |
| | | PVIN = VDDQ = 1.7 V | 0.822 | 0.856 | 0.887 | |
| | | PVIN = VDDQ = 1.8 V | 0.874 | 0.908 | 0.939 | |
| | | PVIN = VDDQ = 1.9 V | 0.923 | 0.957 | 0.988 | |
| | | $I_{OUT}$ = ±0.5A, AVIN = 2.5 V | | | | |
| | | PVIN = VDDQ = 1.7 V | 0.820 | 0.856 | 0.890 | |
| | | PVIN = VDDQ = 1.8 V | 0.870 | 0.908 | 0.940 | |
| | | PVIN = VDDQ = 1.9 V | 0.920 | 0.957 | 0.990 | |
| | $V_{TT}$ Output Voltage (DDR III) [3] | $I_{OUT}$ = 0A, AVIN = 2.5 V | | | | V |
| | | PVIN = VDDQ = 1.35V | 0.656 | 0.677 | 0.698 | |
| | | PVIN = VDDQ = 1.5 V | 0.731 | 0.752 | 0.773 | |
| | | PVIN = VDDQ = 1.6 V | 0.781 | 0.802 | 0.823 | |
| | | $I_{OUT}$ = 0.2 A, AVIN = 2.5V<br>PVIN = VDDQ = 1.35V | 0.667 | 0.688 | 0.710 | |
| | | $I_{OUT}$ = -0.2A, AVIN = 2.5V<br>PVIN = VDDQ = 1.35V | 0.641 | 0.673 | 0.694 | |
| | | $I_{OUT}$ = 0.4 A, AVIN = 2.5 V<br>PVIN = VDDQ = 1.5 V | 0.740 | 0.763 | 0.786 | |
| | | $I_{OUT}$ = –0.4 A, AVIN = 2.5 V<br>PVIN = VDDQ = 1.5 V | 0.731 | 0.752 | 0.773 | |
| | | $I_{OUT}$ = 0.5 A, AVIN = 2.5 V<br>PVIN = VDDQ = 1.6 V | 0.790 | 0.813 | 0.836 | |
| | | $I_{OUT}$ = –0.5 A, AVIN = 2.5 V<br>PVIN = VDDQ = 1.6 V | 0.781 | 0.802 | 0.823 | |

(1) Limits are 100% production tested at 25°C. Limits over the operating temperature range are specified through correlation using Statistical Quality Control (SQC) methods. The limits are used to calculate Texas Instruments' Average Outgoing Quality Level (AOQL).
(2) VIN is defined as VIN = AVIN = PVIN.
(3) $V_{TT}$ load regulation is tested by using a 10 ms current pulse and measuring $V_{TT}$.


Copyright © 2007–2014, Texas Instruments Incorporated

## Electrical Characteristics (continued)

Typical limits tested at $T_J$ = 25°C. Minimum and maximum limits apply over the full operating junction temperature range ($T_J$ = –40°C to 125°C).(1) Unless otherwise specified, AVIN = PVIN = 2.5 V, VDDQ = 2.5 V.(2)

| PARAMETER | | TEST CONDITIONS | MIN | TYP | MAX | UNIT |
|---|---|---|---|---|---|---|
| $VOS_{Vtt}$ | $V_{TT}$ Output Voltage Offset ($V_{REF}$ – $V_{TT}$) for DDR I (3) | $I_{OUT}$ = 0 A | –30 | 0 | 30 | mV |
| | | $I_{OUT}$ = –1.5 A | –30 | 0 | 30 | |
| | | $I_{OUT}$ = 1.5 A | –30 | 0 | 30 | |
| | $V_{TT}$ Output Voltage Offset ($V_{REF}$ – $V_{TT}$) for DDR II (3) | $I_{OUT}$ = 0 A | –30 | 0 | 30 | |
| | | $I_{OUT}$ = –0.5 A | –30 | 0 | 30 | |
| | | $I_{OUT}$ = 0.5 A | –30 | 0 | 30 | |
| | $V_{TT}$ Output Voltage Offset ($V_{REF}$ – $V_{TT}$) for DDR III (3) | $I_{OUT}$ = 0 A | –30 | 0 | 30 | |
| | | $I_{OUT}$ = ±0.2 A | –30 | 0 | 30 | |
| | | $I_{OUT}$ = ±0.4 A | –30 | 0 | 30 | |
| | | $I_{OUT}$ = ±0.5 A | –30 | 0 | 30 | |
| $I_Q$ | Quiescent Current (4) | $I_{OUT}$ = 0 A | | 320 | 500 | µA |
| $Z_{VDDQ}$ | VDDQ Input Impedance | | | 100 | | kΩ |
| $I_{SD}$ | Quiescent current in shutdown (4) | SD = 0 V | | 115 | 150 | µA |
| $I_{Q_SD}$ | Shutdown leakage current | SD = 0 V | | 2 | 5 | |
| $V_{IH}$ | Minimum Shutdown High Level | | 1.9 | | | V |
| $V_{IL}$ | Maximum Shutdown Low Level | | | | 0.8 | |
| Iv | $V_{TT}$ leakage current in shutdown | SD = 0 V<br>$V_{TT}$ = 1.25 V | | 1 | 10 | µA |
| $I_{SENSE}$ | $V_{SENSE}$ Input current | | | 13 | | nA |
| $T_{SD}$ | Thermal Shutdown (5) | | | 165 | | °C |
| $T_{SD_HYS}$ | Thermal Shutdown Hysteresis | | | 10 | | |

(4) Quiescent current defined as the current flow into AVIN.
(5) The maximum allowable power dissipation is a function of the maximum junction temperature, $T_{J(MAX)}$, the junction to ambient thermal resistance, $R_{\theta JA}$, and the ambient temperature, $T_A$. Exceeding the maximum allowable power dissipation will cause excessive die temperature and the regulator will go into thermal shutdown.

Copyright © 2007–2014, Texas Instruments Incorporated

## 7.7 Typical Characteristics

Unless otherwise specified AVIN = PVIN = 2.5 V.

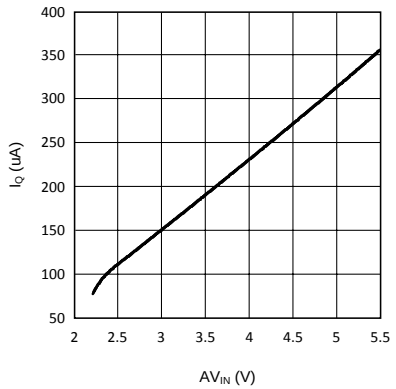


**Figure 1. $I_Q$ vs $AV_{IN}$ In SD**

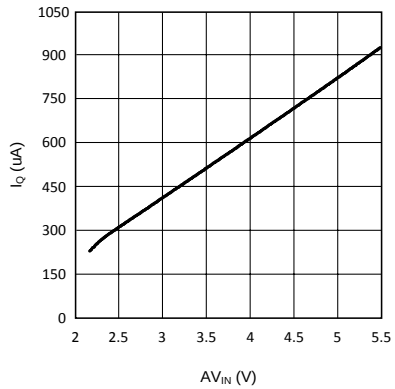


**Figure 2. $I_Q$ vs $Av_{IN}$**

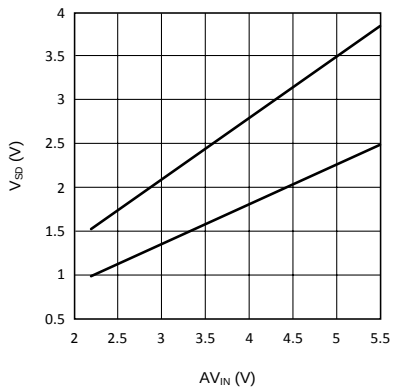


**Figure 3. $V_{IH}$ and $V_{IL}$**

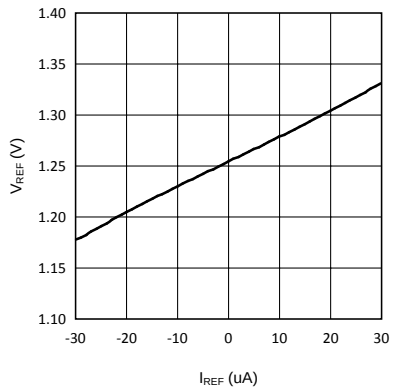


**Figure 4. $V_{REF}$ vs $I_{REF}$**

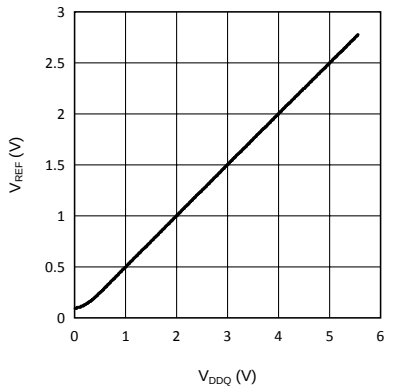


**Figure 5. $V_{REF}$ vs $V_{DDQ}$**

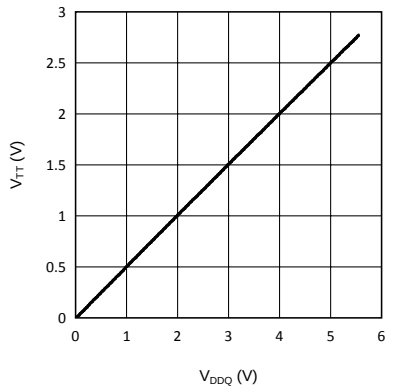


**Figure 6. $V_{TT}$ vs $V_{DDQ}$**


Copyright © 2007–2014, Texas Instruments Incorporated

## Typical Characteristics (continued)

Unless otherwise specified AVIN = PVIN = 2.5 V.

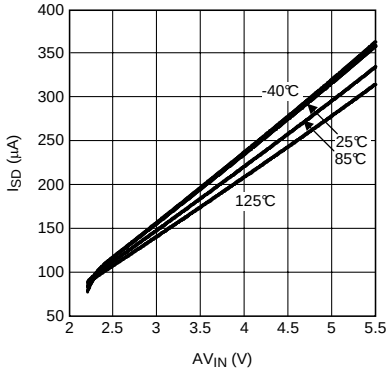


**Figure 7. $I_{SD}$ vs $AV_{IN}$ Over Temperature**

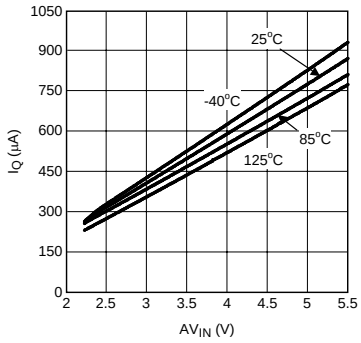


**Figure 8. $I_Q$ vs $AV_{IN}$ Over Temperature**

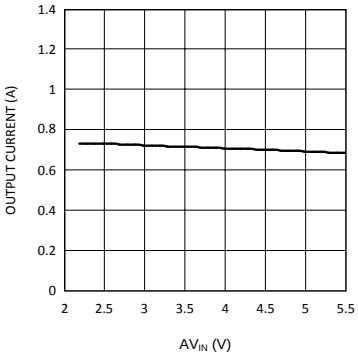


$V_{DDQ}$ = 2.5 V $PV_{IN}$ = 1.8 V

**Figure 9. Maximum Sourcing Current vs $AV_{IN}$**

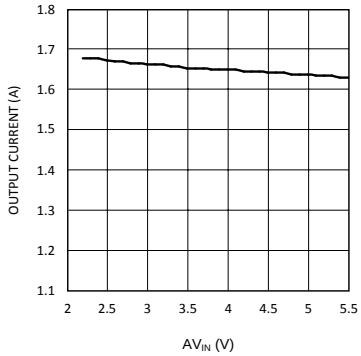


$V_{DDQ}$ = 2.5 V $PV_{IN}$ = 2.5 V

**Figure 10. Maximum Sourcing Current vs $AV_{IN}$**

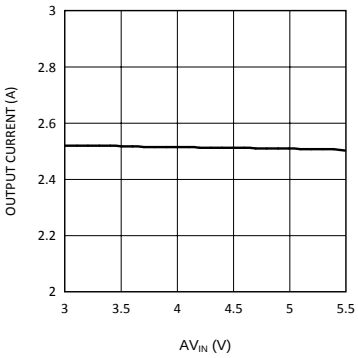


$V_{DDQ}$ = 2.5 V $PV_{IN}$ = 3.3 V

**Figure 11. Maximum Sourcing Current vs $AV_{IN}$**

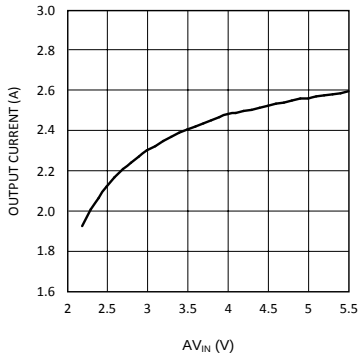


$V_{DDQ}$ = 2.5 V

**Figure 12. Maximum Sinking Current vs $AV_{IN}$**

## Typical Characteristics (continued)

Unless otherwise specified AVIN = PVIN = 2.5 V.

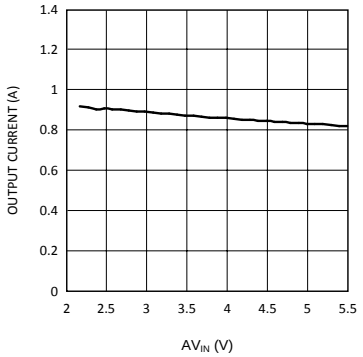


$V_{DDQ}$ = 1.8 V $PV_{IN}$ = 1.8 V

**Figure 13. Maximum Sourcing Current vs $AV_{IN}$**

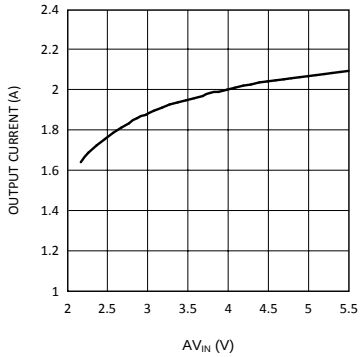


$V_{DDQ}$ = 1.8 V

**Figure 14. Maximum Sinking Current vs $AV_{IN}$**

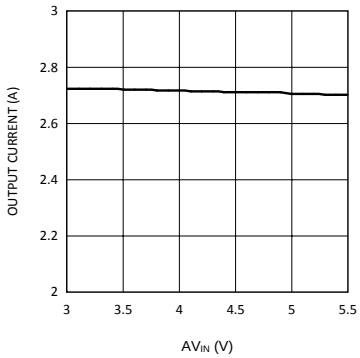


$V_{DDQ}$ = 1.8 V $PV_{IN}$ = 3.3 V

**Figure 15. Maximum Sourcing Current vs $AV_{IN}$**


Copyright © 2007–2014, Texas Instruments Incorporated

# 8 Detailed Description

## 8.1 Overview

The LP2998 linear regulator is designed to meet JEDEC SSTL-2 and JEDEC SSTL-18 specifications for termination of DDR-SDRAM and DDR2 memory. The device also supports DDR3 and DDR3L VTT bus termination with $V_{DDQ}$ min of 1.35 V. The device contains a high-speed operational amplifier to provide excellent response to load transients. The output stage prevents shoot through while delivering 1.5 A continuous current and transient peaks up to 3 A in the application as required for DDR-SDRAM termination.

## 8.2 Functional Block Diagram

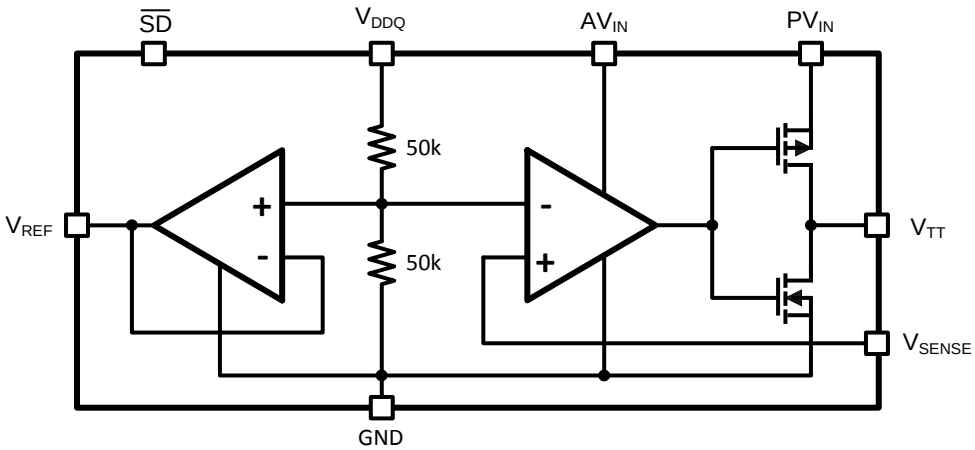


## 8.3 Feature Description

The LP2998 is a linear bus termination regulator designed to meet the JEDEC requirements of SSTL-2 and SSTL-18. The output, $V_{TT}$ is capable of sinking and sourcing current while regulating the output voltage equal to VDDQ / 2. The output stage has been designed to maintain excellent load regulation while preventing shoot through. The LP2998 also incorporates two distinct power rails that separates the analog circuitry from the power output stage. This allows a split rail approach to be utilized to decrease internal power dissipation. It also permits the LP2998 to provide a termination solution for DDR3-SDRAM and DDR3L-SDRAM memory.

## 8.4 Device Functional Modes

The LP2998 can also be used to provide a termination voltage for other logic schemes such as SSTL-3 or HSTL. Series Stub Termination Logic (SSTL) was created to improve signal integrity of the data transmission across the memory bus. This termination scheme is essential to prevent data error from signal reflections while transmitting at high frequencies encountered with DDR-SDRAM. The most common form of termination is Class II single parallel termination. This involves one $R_S$ series resistor from the chipset to the memory and one $R_T$ termination resistor. Typical values for $R_S$ and $R_T$ are 25 Ω, although these can be changed to scale the current requirements from the LP2998. This implementation can be seen below in Figure 16.

## Device Functional Modes (continued)

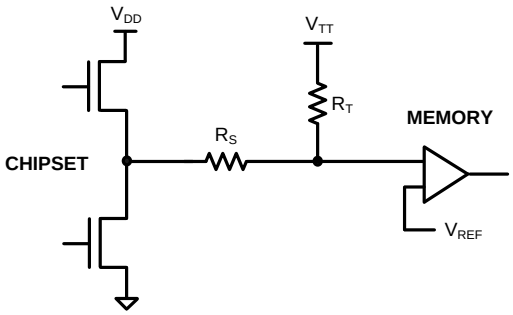


**Figure 16. SSTL-Termination Scheme**


Copyright © 2007–2014, Texas Instruments Incorporated

# 9 Application and Implementation

## 9.1 Application Information

### 9.1.1 Input Capacitor

The LP2998 does not require a capacitor for input stability, but it is recommended for improved performance during large load transients to prevent the input rail from dropping. The input capacitor should be located as close as possible to the PVIN pin. Several recommendations exist dependent on the application required. A typical value recommended for AL electrolytic capacitors is 50 µF. Ceramic capacitors can also be used, a value in the range of 10 µF with X5R or better would be an ideal choice. The input capacitance can be reduced if the LP2998 is placed close to the bulk capacitance from the output of the 2.5 V DC-DC converter. If the two supply rails (AVIN and PVIN) are separated then the 47 uF capacitor should be placed as close to possible to the PVIN rail. An additional 0.1 uF ceramic capacitor can be placed on the AVIN rail to prevent excessive noise from coupling into the device.

### 9.1.2 Output Capacitor

The LP2998 has been designed to be insensitive of output capacitor size or ESR (Equivalent Series Resistance). This allows the flexibility to use any capacitor desired. The choice for output capacitor will be determined solely on the application and the requirements for load transient response of $V_{TT}$. As a general recommendation the output capacitor should be sized above 100 µF with a low ESR for SSTL applications with DDR-SDRAM. The value of ESR should be determined by the maximum current spikes expected and the extent at which the output voltage is allowed to droop. Several capacitor options are available on the market and a few of these are highlighted below:

AL - It should be noted that many aluminum electrolytics only specify impedance at a frequency of 120 Hz, which indicates they have poor high frequency performance. Only aluminum electrolytics that have an impedance specified at a higher frequency (between 20 kHz and 100 kHz) should be used for the LP2998. To improve the ESR several AL electrolytics can be combined in parallel for an overall reduction. An important note to be aware of is the extent at which the ESR will change over temperature. Aluminum electrolytic capacitors can have their ESR rapidly increase at cold temperatures.

Ceramic - Ceramic capacitors typically have a low capacitance, in the range of 10 to 100 µF range, but they have excellent AC performance for bypassing noise because of very low ESR (typically less than 10 mΩ). However, some dielectric types do not have good capacitance characteristics as a function of voltage and temperature. Because of the typically low value of capacitance it is recommended to use ceramic capacitors in parallel with another capacitor such as an aluminum electrolytic. A dielectric of X5R or better is recommended for all ceramic capacitors.

Hybrid - Several hybrid capacitors such as OS-CON and SP are available from several manufacturers. These offer a large capacitance while maintaining a low ESR. These are the best solution when size and performance are critical, although their cost is typically higher than any other capacitor.

### 9.1.3 Thermal Dissipation

Since the LP2998 is a linear regulator any current flow from $V_{TT}$ will result in internal power dissipation generating heat. To prevent damaging the part from exceeding the maximum allowable junction temperature, care should be taken to derate the part dependent on the maximum expected ambient temperature and power dissipation. The maximum allowable internal temperature rise ($T_{Rmax}$) can be calculated given the maximum ambient temperature ($T_{Amax}$) of the application and the maximum allowable junction temperature ($T_{Jmax}$).

$$T_{Rmax} = T_{Jmax} - T_{Amax} \quad (1)$$

From this equation, the maximum power dissipation ($P_{Dmax}$) of the part can be calculated:

$$P_{Dmax} = T_{Rmax} / R_{\theta JA} \quad (2)$$

The $R_{\theta JA}$ of the LP2998 will be dependent on several variables: the package used; the thickness of copper; the number of vias and the airflow.

## Application Information (continued)

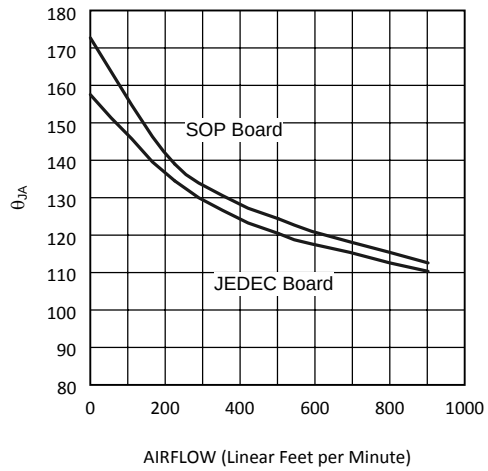


**Figure 17. $R_{\theta JA}$ vs Airflow (SOIC-8)**

Additional improvements can be made by the judicious use of vias to connect the part and dissipate heat to an internal ground plane. Using larger traces and more copper on the top side of the board can also help. With careful layout it is possible to reduce the $R_{\theta JA}$ further than the nominal values shown in Figure 17.

Layout is also extremely critical to maximize the output current with the SO PowerPAD package. By simply placing vias under the DAP the $\theta_{JA}$ can be lowered significantly.

Additional improvements in lowering the $R_{\theta JA}$ can also be achieved with a constant airflow across the package. Maintaining the same conditions as above and utilizing the 2x2 via array, Figure 18 shows how the $R_{\theta JA}$ varies with airflow.

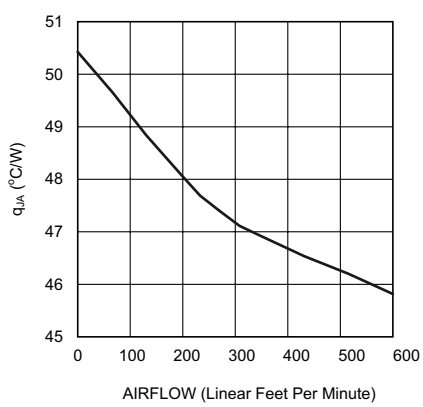


**Figure 18. $R_{\Theta JA}$ vs Airflow Speed (Jedec Board with 4 Vias)**

Optimizing the $R_{\theta JA}$ and placing the LP2998 in a section of a board exposed to lower ambient temperature allows the part to operate with higher power dissipation. The internal power dissipation can be calculated by summing the three main sources of loss: output current at $V_{TT}$, either sinking or sourcing, and quiescent current at AVIN and VDDQ. During the active state (when shutdown is not held low) the total internal power dissipation can be calculated from the following equations:

$$P_D = P_{AVIN} + P_{VDDQ} + P_{VTT} \quad (3)$$

$$P_{AVIN} = I_{AVIN} * V_{AVIN} \quad (4)$$

$$P_{VDDQ} = V_{VDDQ} * I_{VDDQ} = V_{VDDQ2} \times R_{VDDQ} \quad (5)$$

To calculate the maximum power dissipation at $V_{TT}$ both conditions at $V_{TT}$ need to be examined, sinking, and sourcing current. Although only one equation will add into the total, $V_{TT}$ cannot source and sink current simultaneously.


Copyright © 2007–2014, Texas Instruments Incorporated

## Application Information (continued)

$P_{VTT} = V_{VTT} \times I_{LOAD}$ (Sinking) or (6)

$P_{VTT} = (V_{PVIN} - V_{VTT}) \times I_{LOAD}$ (Sourcing) (7)

The power dissipation of the LP2998 can also be calculated during the shutdown state. During this condition the output $V_{TT}$ will tri-state, therefore that term in the power equation will disappear as it cannot sink or source any current (leakage is negligible). The only losses during shutdown will be the reduced quiescent current at AVIN and the constant impedance that is seen at the VDDQ pin.

$P_D = P_{AVIN} + P_{VDDQ}$ (8)

$P_{AVIN} = I_{AVIN} \times V_{AVIN}$ (9)

$P_{VDDQ} = V_{VDDQ} * I_{VDDQ} = V_{VDDQ2} \times R_{VDDQ}$ (10)

## 9.2 Typical Application

Several different application circuits are shown below to illustrate some of the options that are possible in configuring the LP2998. Graphs of the individual circuit performance can be found in the *Typical Characteristics* section. These curves illustrate how the maximum output current is affected by changes in AVIN and PVIN.

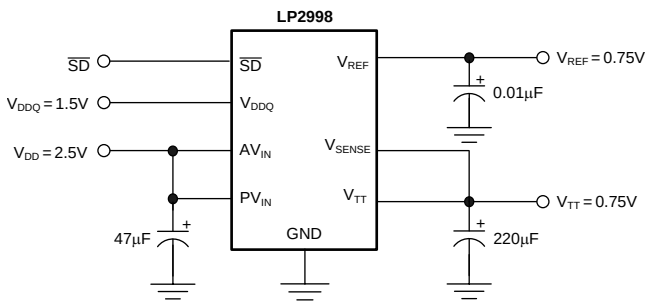


**Figure 19. Typical Application Circuit**

### 9.2.1 DDR-III Applications

With the separate VDDQ pin and an internal resistor divider it is possible to use the LP2998 in applications utilizing DDR-III memory. The output stage is connected to the 1.5 V rail and the AVIN pin can be connected to a 2.2 V to 5.5 V rail.

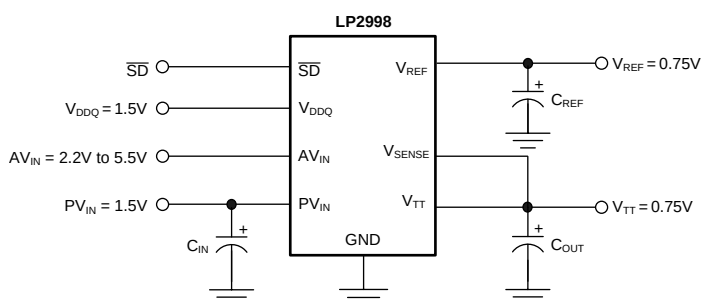


**Figure 20. Recommended DDR-III Termination**

If it is not desirable to use the 1.5 V - 2.5 V rail it is possible to connect the output stage to a 3.3 V rail. Care should be taken to not exceed the maximum junction temperature as the thermal dissipation increases with lower $V_{TT}$ output voltages. For this reason it is not recommended to power PVIN off a rail higher than the nominal 3.3 V. The advantage of this configuration is that it has the ability to source and sink a higher maximum continuous current.

Copyright © 2007–2014, Texas Instruments Incorporated

## Typical Application (continued)

### 9.2.2 DDR-II Applications

With the separate VDDQ pin and an internal resistor divider it is possible to use the LP2998 in applications utilizing DDR-II memory. Figure 21 and Figure 22 show several implementations of recommended circuits with output curves displayed in the *Typical Characteristics*. Figure 21 shows the recommended circuit configuration for DDR-II applications. The output stage is connected to the 1.8 V rail and the AVIN pin can be connected to either a 3.3 V or 5 V rail.

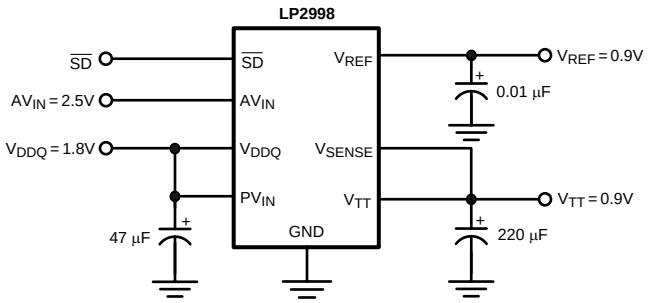


**Figure 21. Recommended DDR-II Termination**

If it is not desirable to use the 1.8 V rail it is possible to connect the output stage to a 3.3 V rail. Care should be taken to not exceed the maximum junction temperature as the thermal dissipation increases with lower $V_{TT}$ output voltages. For this reason it is not recommended to power PVIN off a rail higher than the nominal 3.3 V. The advantage of this configuration is that it has the ability to source and sink a higher maximum continuous current.

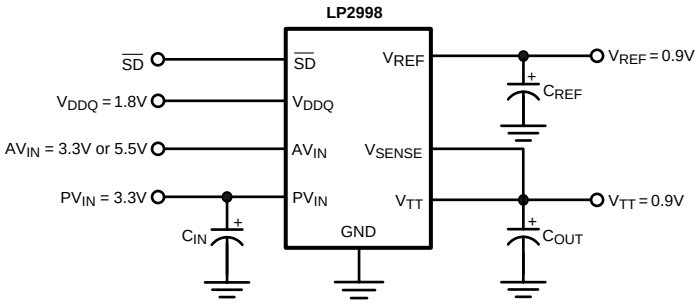


**Figure 22. DDR-II Termination with Higher Voltage Rails**

### 9.2.3 SSTL-2 Applications

For the majority of applications that implement the SSTL-2 termination scheme it is recommended to connect all the input rails to the 2.5 V rail. This provides an optimal trade-off between power dissipation and component count and selection. An example of this circuit can be seen in Figure 23.


Copyright © 2007–2014, Texas Instruments Incorporated

## Typical Application (continued)

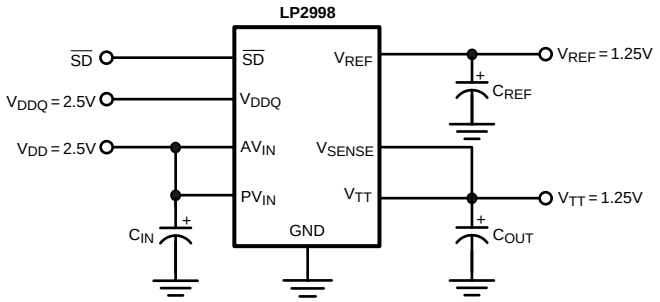


**Figure 23. Recommended SSTL-2 Implementation**

If power dissipation or efficiency is a major concern then the LP2998 has the ability to operate on split power rails. The output stage (PVIN) can be operated on a lower rail such as 1.8 V and the analog circuitry (AVIN) can be connected to a higher rail such as 2.5 V, 3.3 V, or 5 V. This allows the internal power dissipation to be lowered when sourcing current from $V_{TT}$. The disadvantage of this circuit is that the maximum continuous current is reduced because of the lower rail voltage, although it is adequate for all motherboard SSTL-2 applications. Increasing the output capacitance can also help if periods of large load transients will be encountered.

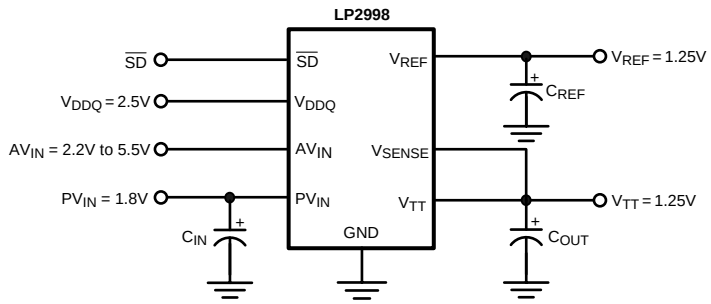


**Figure 24. Lower Power Dissipation SSTL-2 Implementation**

The third option for SSTL-2 applications in the situation that a 1.8 V rail is not available and it is not desirable to use 2.5 V, is to connect the LP2998 power rail to 3.3 V. In this situation AVIN will be limited to operation on the 3.3 V or 5 V rail as PVIN can never exceed AVIN. This configuration has the ability to provide the maximum continuous output current at the downside of higher thermal dissipation. Care should be taken to prevent the LP2998 from experiencing large current levels which cause the junction temperature to exceed the maximum. Because of this risk it is not recommended to supply the output stage with a voltage higher than a nominal 3.3 V rail.

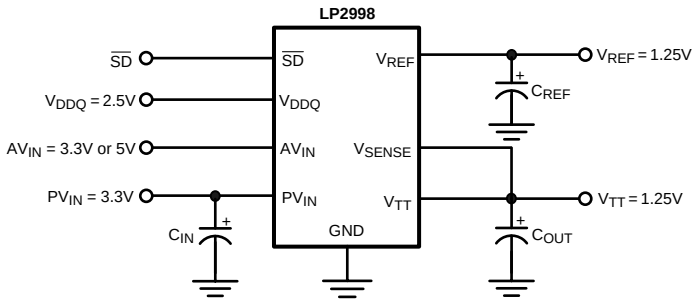


**Figure 25. SSTL-2 Implementation with Higher Voltage Rails**

## Typical Application (continued)

### 9.2.4 Level Shifting

If standards other than SSTL-2 are required, such as SSTL-3, it may be necessary to use a different scaling factor than 0.5 times $V_{DDQ}$ for regulating the output voltage. Several options are available to scale the output to any voltage required. One method is to level shift the output by using feedback resistors from $V_{TT}$ to the $V_{SENSE}$ pin. This has been illustrated in Figure 26 and Figure 27. Figure 26 shows how to use two resistors to level shift $V_{TT}$ above the internal reference voltage of VDDQ/2. To calculate the exact voltage at $V_{TT}$ the following equation can be used.

$$V_{TT} = VDDQ/2\ (1 + R1/R2) \tag{11}$$

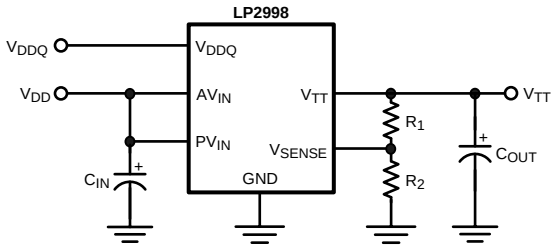


**Figure 26. Increasing VTT by Level Shifting**

Conversely, the R2 resistor can be placed between $V_{SENSE}$ and $V_{DDQ}$ to shift the $V_{TT}$ output lower than the internal reference voltage of VDDQ/2. The equations relating VTT and the resistors can be seen below:

$$V_{TT} = VDDQ/2\ (1 - R1/R2) \tag{12}$$

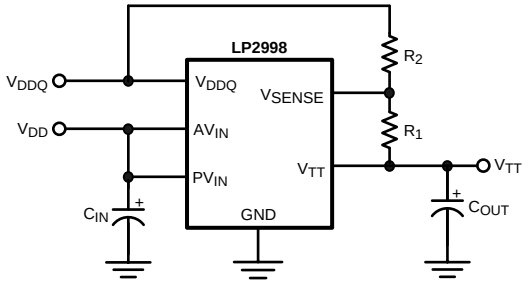


**Figure 27. Decreasing VTT by Level Shifting**

#### *9.2.4.1 Output Capacitor Selection*

For applications utilizing the LP2998 to terminate SSTL-2 I/O signals the typical application circuit shown in Figure 28 can be implemented.

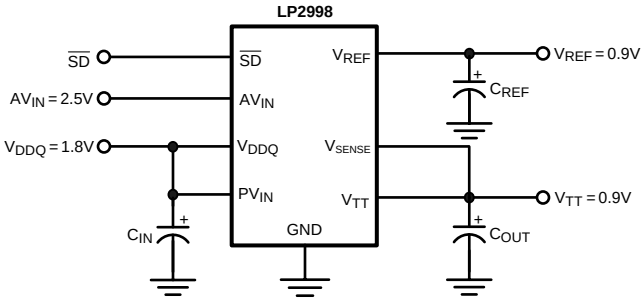


**Figure 28. Typical SSTL-2 Application Circuit**


Copyright © 2007–2014, Texas Instruments Incorporated

## Typical Application (continued)

This circuit permits termination in a minimum amount of board space and component count. Capacitor selection can be varied depending on the number of lines terminated and the maximum load transient. However, with motherboards and other applications where $V_{TT}$ is distributed across a long plane it is advisable to use multiple bulk capacitors and addition to high frequency decoupling. Figure 29 shown below depicts an example circuit where 2 bulk output capacitors could be situated at both ends of the $V_{TT}$ plane for optimal placement. Large aluminum electrolytic capacitors are used for their low ESR and low cost.

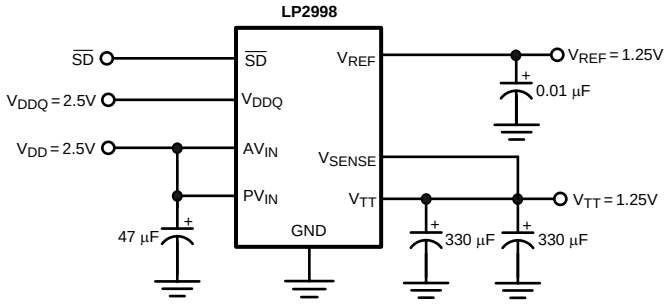


**Figure 29. Typical SSTL-2 Application Circuit for Motherboards**

In most PC applications an extensive amount of decoupling is required because of the long interconnects encountered with the DDR-SDRAM DIMMs mounted on modules. As a result bulk aluminum electrolytic capacitors in the range of 1000 µF are typically used.

### 9.2.5 HSTL Applications

The LP2998 can be easily adapted for HSTL applications by connecting $V_{DDQ}$ to the 1.5 V rail. This will produce a $V_{TT}$ and $V_{REF}$ voltage of approximately 0.75 V for the termination resistors. AVIN and PVIN should be connected to a 2.5 V rail for optimal performance.

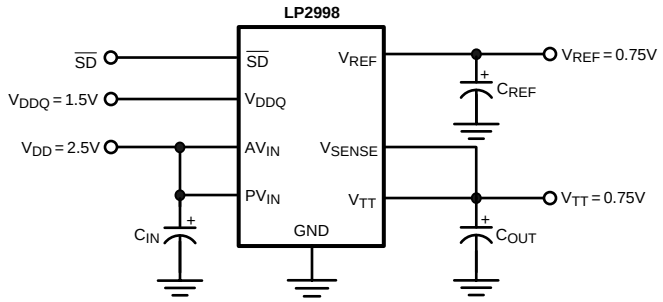


**Figure 30. HSTL Application**

### 9.2.6 QDR Applications

Quad data rate (QDR) applications utilize multiple channels for improved memory performance. However, this increase in bus lines has the effect of increasing the current levels required for termination. The recommended approach in terminating multiple channels is to use a dedicated LP2998 for each channel. This simplifies layout and reduces the internal power dissipation for each regulator. Separate $V_{REF}$ signals can be used for each DIMM bank from the corresponding regulator with the chipset reference provided by a local resistor divider or one of the LP2998 signals. Because $V_{REF}$ and $V_{TT}$ are expected to track and the part to part variations are minor, there should be little difference between the reference signals of each LP2998.

Copyright © 2007–2014, Texas Instruments Incorporated

# 10 Power Supply Recommendations

There are several recommendations for the LP2998 input power supply. An input capacitor is not required but is recommended for improved performance during large load transients to prevent the input rail from dropping. The input capacitor should be located as close as possible to the PVIN pin. Several recommendations exist dependent on the application required. A typical value recommended for AL electrolytic capacitors is 50 µF. Ceramic capacitors can also be used, a value in the range of 10 µF with X5R or better would be an ideal choice. The input capacitance can be reduced if the LP2998 is placed close to the bulk capacitance from the output of the 2.5 V DC-DC converter. If the two supply rails (AVIN and PVIN) are separated then the 47 uF capacitor should be placed as close to possible to the PVIN rail. An additional 0.1 uF ceramic capacitor can be placed on the AVIN rail to prevent excessive noise from coupling into the device.

# 11 Layout

## 11.1 Layout Guidelines

1. The input capacitor for the power rail should be placed as close as possible to the PVIN pin.
2. $V_{SENSE}$ should be connected to the $V_{TT}$ termination bus at the point where regulation is required. For motherboard applications an ideal location would be at the center of the termination bus.
3. $V_{DDQ}$ can be connected remotely to the $V_{DDQ}$ rail input at either the DIMM or the Chipset. This provides the most accurate point for creating the reference voltage.
4. For improved thermal performance excessive top side copper should be used to dissipate heat from the package. Numerous vias from the ground connection to the internal ground plane will help. Additionally these can be located underneath the package if manufacturing standards permit.
5. Care should be taken when routing the $V_{SENSE}$ trace to avoid noise pickup from switching I/O signals. A 0.1 µF ceramic capacitor located close to the $_{SENSE}$ can also be used to filter any unwanted high frequency signal. This can be an issue especially if long $_{SENSE}$ traces are used.
6. $V_{REF}$ should be bypassed with a 0.01 µF or 0.1 µF ceramic capacitor for improved performance. This capacitor should be located as close as possible to the $V_{REF}$ pin.


Copyright © 2007–2014, Texas Instruments Incorporated

## 11.2 Layout Examples

Figure 31 and Figure 32 are layout examples for the LP2998/Q1. These examples are taken from the LP2998EVM.

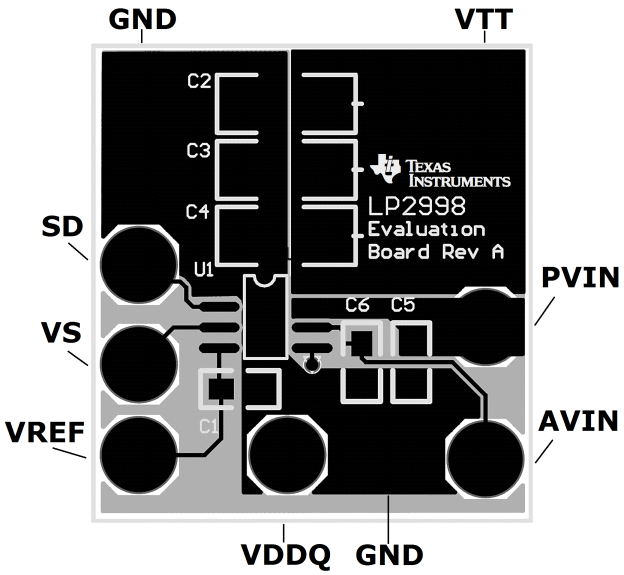


**Figure 31. LP2998EVM SO PowerPAD Layout Example (Front)**

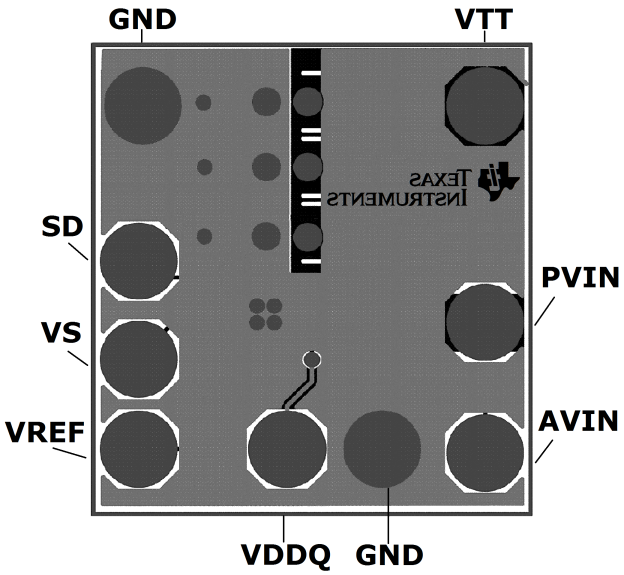


**Figure 32. LP2998EVM SO PowerPAD Layout Example (Back)**

# 12 Device and Documentation Support

## 12.1 Related Links

Table 1 lists quick access links. Categories include technical documents, support and community resources, tools and software, and quick access to sample or buy.

**Table 1. Related Links**

| PARTS | PRODUCT FOLDER | SAMPLE & BUY | TECHNICAL DOCUMENTS | TOOLS & SOFTWARE | SUPPORT & COMMUNITY |
|---|---|---|---|---|---|
| LP2998 | Click here | Click here | Click here | Click here | Click here |
| LP2998-Q1 | Click here | Click here | Click here | Click here | Click here |

## 12.2 Trademarks

PowerPAD is a trademark of Texas Instruments.
All other trademarks are the property of their respective owners.

## 12.3 Electrostatic Discharge Caution

These devices have limited built-in ESD protection. The leads should be shorted together or the device placed in conductive foam during storage or handling to prevent electrostatic damage to the MOS gates.

## 12.4 Glossary

SLYZ022 — *TI Glossary*.

This glossary lists and explains terms, acronyms, and definitions.

# 13 Mechanical, Packaging, and Orderable Information

The following pages include mechanical, packaging, and orderable information. This information is the most current data available for the designated devices. This data is subject to change without notice and revision of this document. For browser-based versions of this data sheet, refer to the left-hand navigation.


Copyright © 2007–2014, Texas Instruments Incorporated

## PACKAGING INFORMATION

| Orderable Device | Status (1) | Package Type | Package Drawing | Pins | Package Qty | Eco Plan (2) | Lead finish/ Ball material (6) | MSL Peak Temp (3) | Op Temp (°C) | Device Marking (4/5) | Samples |
|---|---|---|---|---|---|---|---|---|---|---|---|
| LP2998MA/NOPB | ACTIVE | SOIC | D | 8 | 95 | RoHS & Green | SN | Level-1-260C-UNLIM | -40 to 125 | LP2998 MA | Samples |
| LP2998MAE/NOPB | ACTIVE | SOIC | D | 8 | 250 | RoHS & Green | SN | Level-1-260C-UNLIM | -40 to 125 | LP2998 MA | Samples |
| LP2998MAX/NOPB | ACTIVE | SOIC | D | 8 | 2500 | RoHS & Green | SN | Level-1-260C-UNLIM | -40 to 125 | LP2998 MA | Samples |
| LP2998MR/NOPB | ACTIVE | SO PowerPAD | DDA | 8 | 95 | RoHS & Green | SN | Level-3-260C-168 HR | -40 to 125 | LP2998 MR | Samples |
| LP2998MRE/NOPB | ACTIVE | SO PowerPAD | DDA | 8 | 250 | RoHS & Green | SN | Level-3-260C-168 HR | -40 to 125 | LP2998 MR | Samples |
| LP2998MRX/NOPB | ACTIVE | SO PowerPAD | DDA | 8 | 2500 | RoHS & Green | SN | Level-3-260C-168 HR | -40 to 125 | LP2998 MR | Samples |
| LP2998QMR/NOPB | ACTIVE | SO PowerPAD | DDA | 8 | 95 | RoHS & Green | SN | Level-3-260C-168 HR | -40 to 125 | LP2998 Q1MR | Samples |
| LP2998QMRE/NOPB | ACTIVE | SO PowerPAD | DDA | 8 | 250 | RoHS & Green | Call TI \| SN | Level-3-260C-168 HR | -40 to 125 | LP2998 Q1MR | Samples |
| LP2998QMRX/NOPB | ACTIVE | SO PowerPAD | DDA | 8 | 2500 | RoHS & Green | Call TI \| SN | Level-3-260C-168 HR | -40 to 125 | LP2998 Q1MR | Samples |

(1) The marketing status values are defined as follows:
**ACTIVE:** Product device recommended for new designs.
**LIFEBUY:** TI has announced that the device will be discontinued, and a lifetime-buy period is in effect.
**NRND:** Not recommended for new designs. Device is in production to support existing customers, but TI does not recommend using this part in a new design.
**PREVIEW:** Device has been announced but is not in production. Samples may or may not be available.
**OBSOLETE:** TI has discontinued the production of the device.

(2) **RoHS:** TI defines "RoHS" to mean semiconductor products that are compliant with the current EU RoHS requirements for all 10 RoHS substances, including the requirement that RoHS substance do not exceed 0.1% by weight in homogeneous materials. Where designed to be soldered at high temperatures, "RoHS" products are suitable for use in specified lead-free processes. TI may reference these types of products as "Pb-Free".
**RoHS Exempt:** TI defines "RoHS Exempt" to mean products that contain lead but are compliant with EU RoHS pursuant to a specific EU RoHS exemption.
**Green:** TI defines "Green" to mean the content of Chlorine (Cl) and Bromine (Br) based flame retardants meet JS709B low halogen requirements of <=1000ppm threshold. Antimony trioxide based flame retardants must also meet the <=1000ppm threshold requirement.

(3) MSL, Peak Temp. - The Moisture Sensitivity Level rating according to the JEDEC industry standard classifications, and peak solder temperature.

(4) There may be additional marking, which relates to the logo, the lot trace code information, or the environmental category on the device.

(5) Multiple Device Markings will be inside parentheses. Only one Device Marking contained in parentheses and separated by a "~" will appear on a device. If a line is indented then it is a continuation of the previous line and the two combined represent the entire Device Marking for that device.

(6) Lead finish/Ball material - Orderable Devices may have multiple material finish options. Finish options are separated by a vertical ruled line. Lead finish/Ball material values may wrap to two lines if the finish value exceeds the maximum column width.

**Important Information and Disclaimer:**The information provided on this page represents TI's knowledge and belief as of the date that it is provided. TI bases its knowledge and belief on information provided by third parties, and makes no representation or warranty as to the accuracy of such information. Efforts are underway to better integrate information from third parties. TI has taken and continues to take reasonable steps to provide representative and accurate information but may not have conducted destructive testing or chemical analysis on incoming materials and chemicals. TI and TI suppliers consider certain information to be proprietary, and thus CAS numbers and other limited information may not be available for release.

In no event shall TI's liability arising out of such information exceed the total purchase price of the TI part(s) at issue in this document sold by TI to Customer on an annual basis.

**OTHER QUALIFIED VERSIONS OF LP2998, LP2998-Q1 :**

- Catalog : LP2998
- Automotive : LP2998-Q1

NOTE: Qualified Version Definitions:

- Catalog - TI's standard catalog product
- Automotive - Q100 devices qualified for high-reliability automotive applications targeting zero defects

## TAPE AND REEL INFORMATION

**REEL DIMENSIONS**

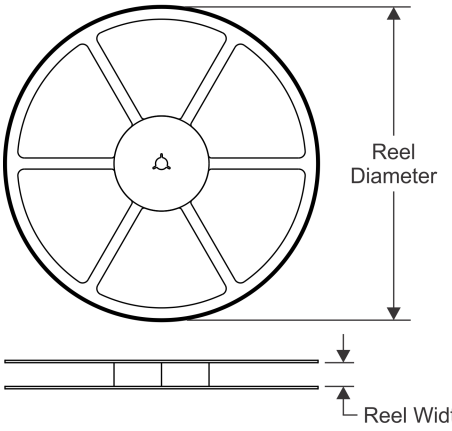


**TAPE DIMENSIONS**

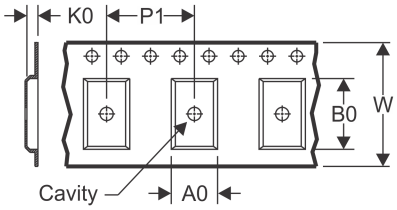


| | |
|---|---|
| A0 | Dimension designed to accommodate the component width |
| B0 | Dimension designed to accommodate the component length |
| K0 | Dimension designed to accommodate the component thickness |
| W | Overall width of the carrier tape |
| P1 | Pitch between successive cavity centers |

**QUADRANT ASSIGNMENTS FOR PIN 1 ORIENTATION IN TAPE**

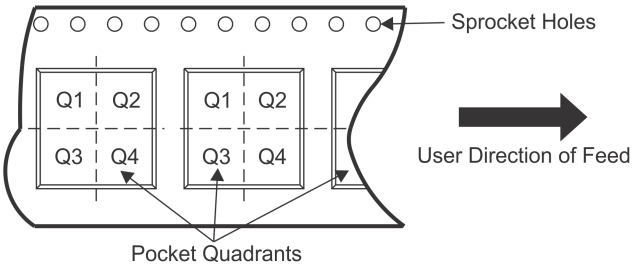


*All dimensions are nominal

| Device | Package Type | Package Drawing | Pins | SPQ | Reel Diameter (mm) | Reel Width W1 (mm) | A0 (mm) | B0 (mm) | K0 (mm) | P1 (mm) | W (mm) | Pin1 Quadrant |
|---|---|---|---|---|---|---|---|---|---|---|---|---|
| LP2998MAE/NOPB | SOIC | D | 8 | 250 | 178.0 | 12.4 | 6.5 | 5.4 | 2.0 | 8.0 | 12.0 | Q1 |
| LP2998MAX/NOPB | SOIC | D | 8 | 2500 | 330.0 | 12.4 | 6.5 | 5.4 | 2.0 | 8.0 | 12.0 | Q1 |
| LP2998MRE/NOPB | SO Power PAD | DDA | 8 | 250 | 178.0 | 12.4 | 6.5 | 5.4 | 2.0 | 8.0 | 12.0 | Q1 |
| LP2998MRX/NOPB | SO Power PAD | DDA | 8 | 2500 | 330.0 | 12.4 | 6.5 | 5.4 | 2.0 | 8.0 | 12.0 | Q1 |
| LP2998QMRE/NOPB | SO Power PAD | DDA | 8 | 250 | 178.0 | 12.4 | 6.5 | 5.4 | 2.0 | 8.0 | 12.0 | Q1 |
| LP2998QMRX/NOPB | SO Power PAD | DDA | 8 | 2500 | 330.0 | 12.4 | 6.5 | 5.4 | 2.0 | 8.0 | 12.0 | Q1 |

TAPE AND REEL BOX DIMENSIONS

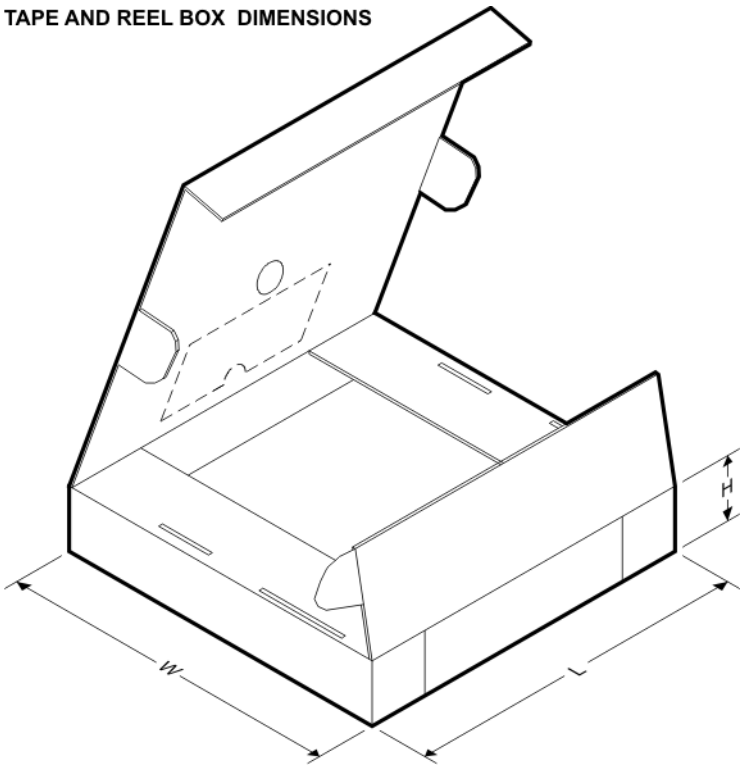


*All dimensions are nominal

| Device | Package Type | Package Drawing | Pins | SPQ | Length (mm) | Width (mm) | Height (mm) |
|---|---|---|---|---|---|---|---|
| LP2998MAE/NOPB | SOIC | D | 8 | 250 | 208.0 | 191.0 | 35.0 |
| LP2998MAX/NOPB | SOIC | D | 8 | 2500 | 367.0 | 367.0 | 35.0 |
| LP2998MRE/NOPB | SO PowerPAD | DDA | 8 | 250 | 208.0 | 191.0 | 35.0 |
| LP2998MRX/NOPB | SO PowerPAD | DDA | 8 | 2500 | 853.0 | 449.0 | 35.0 |
| LP2998QMRE/NOPB | SO PowerPAD | DDA | 8 | 250 | 208.0 | 191.0 | 35.0 |
| LP2998QMRX/NOPB | SO PowerPAD | DDA | 8 | 2500 | 853.0 | 449.0 | 35.0 |

## TUBE

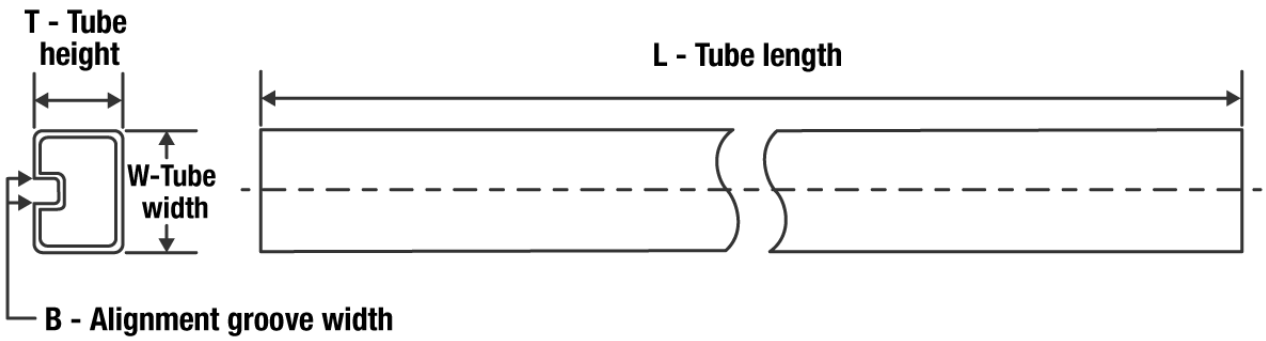


*All dimensions are nominal

| Device | Package Name | Package Type | Pins | SPQ | L (mm) | W (mm) | T (µm) | B (mm) |
|---|---|---|---|---|---|---|---|---|
| LP2998MA/NOPB | D | SOIC | 8 | 95 | 495 | 8 | 4064 | 3.05 |
| LP2998MR/NOPB | DDA | HSOIC | 8 | 95 | 495 | 8 | 4064 | 3.05 |
| LP2998QMR/NOPB | DDA | HSOIC | 8 | 95 | 495 | 8 | 4064 | 3.05 |

DDA (R-PDSO-G8) PowerPAD™ PLASTIC SMALL-OUTLINE

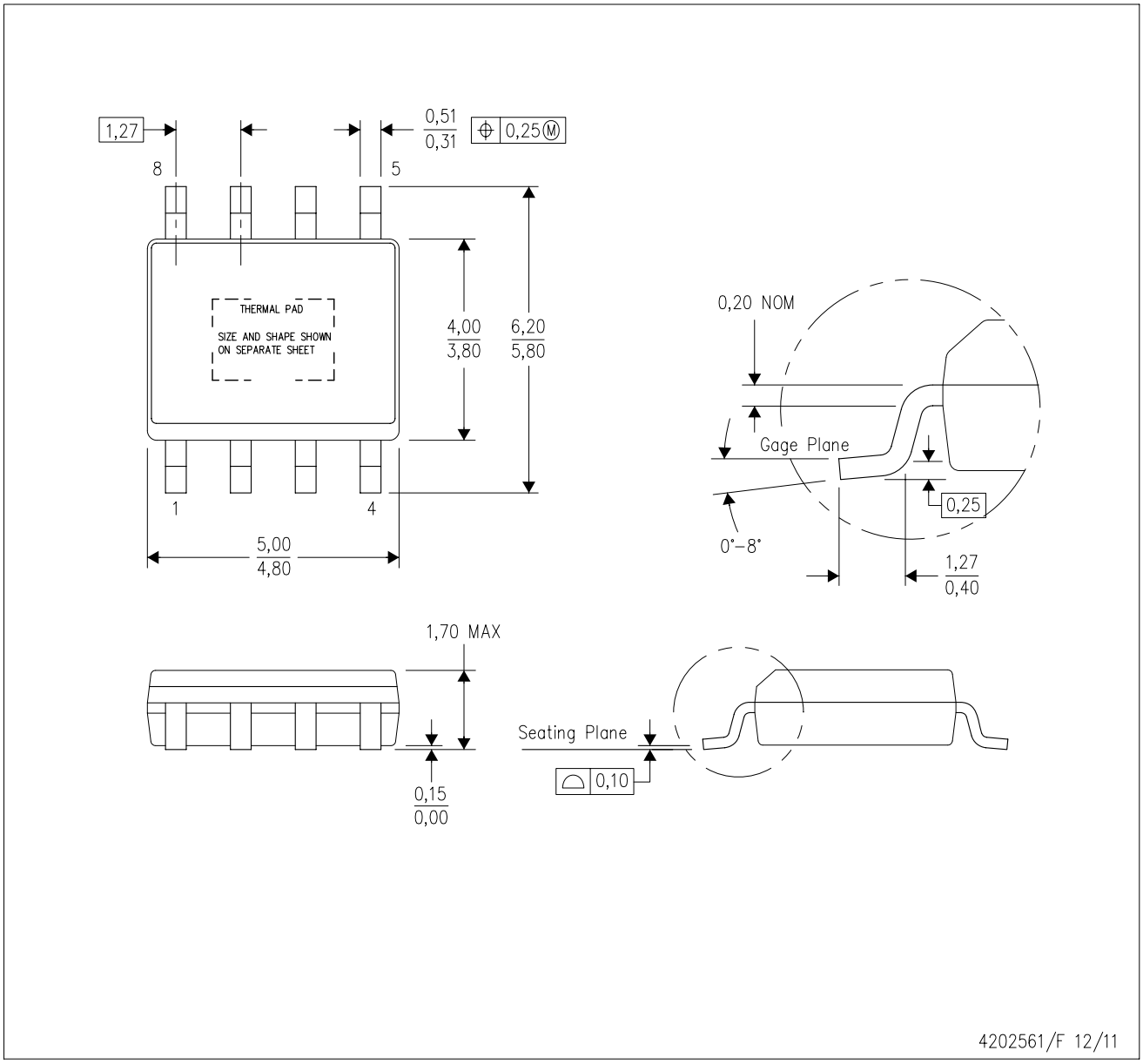


NOTES:
A. All linear dimensions are in millimeters. Dimensioning and tolerancing per ASME Y14.5–1994.
B. This drawing is subject to change without notice.
C. Body dimensions do not include mold flash or protrusion not to exceed 0,15.
D. This package is designed to be soldered to a thermal pad on the board. Refer to Technical Brief, PowerPad Thermally Enhanced Package, Texas Instruments Literature No. SLMA002 for information regarding recommended board layout. This document is available at www.ti.com <http://www.ti.com>.
E. See the additional figure in the Product Data Sheet for details regarding the exposed thermal pad features and dimensions.
F. This package complies to JEDEC MS-012 variation BA

**PowerPAD is a trademark of Texas Instruments.**

DDA (R-PDSO-G8) PowerPAD™ PLASTIC SMALL OUTLINE

THERMAL INFORMATION

This PowerPAD™ package incorporates an exposed thermal pad that is designed to be attached to a printed circuit board (PCB). The thermal pad must be soldered directly to the PCB. After soldering, the PCB can be used as a heatsink. In addition, through the use of thermal vias, the thermal pad can be attached directly to the appropriate copper plane shown in the electrical schematic for the device, or alternatively, can be attached to a special heatsink structure designed into the PCB. This design optimizes the heat transfer from the integrated circuit (IC).

For additional information on the PowerPAD package and how to take advantage of its heat dissipating abilities, refer to Technical Brief, PowerPAD Thermally Enhanced Package, Texas Instruments Literature No. SLMA002 and Application Brief, PowerPAD Made Easy, Texas Instruments Literature No. SLMA004. Both documents are available at www.ti.com.

The exposed thermal pad dimensions for this package are shown in the following illustration.

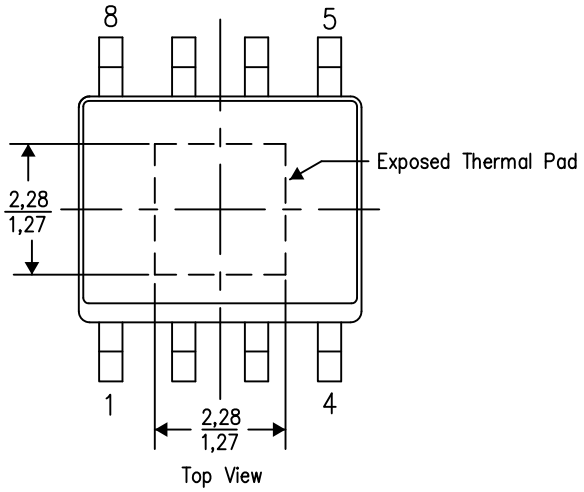


Exposed Thermal Pad Dimensions

4206322-2/L 05/12

NOTE: A. All linear dimensions are in millimeters

PowerPAD is a trademark of Texas Instruments

DDA (R–PDSO–G8) PowerPAD™ PLASTIC SMALL OUTLINE

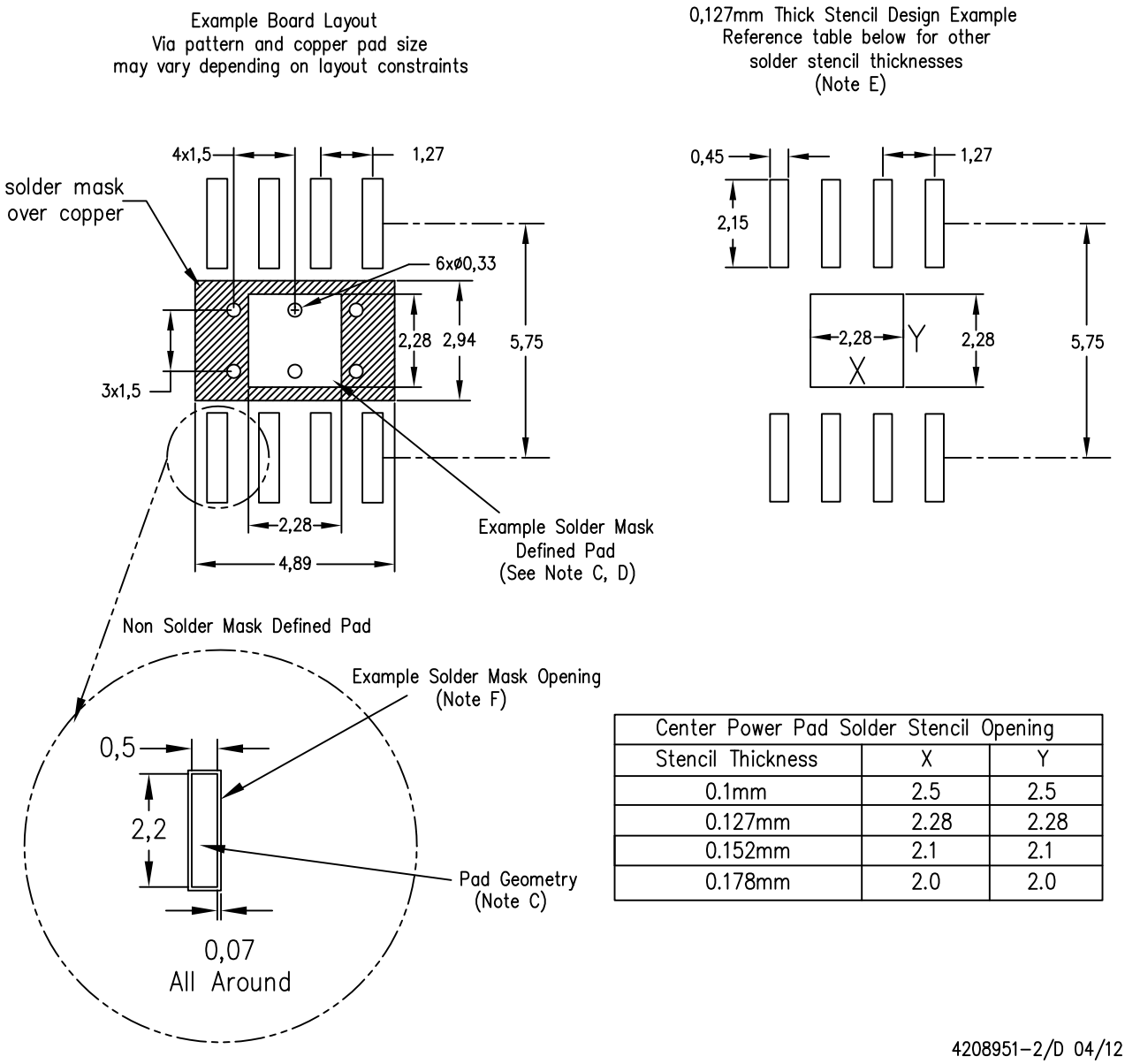


| Center Power Pad Solder Stencil Opening | | |
|---|---|---|
| Stencil Thickness | X | Y |
| 0.1mm | 2.5 | 2.5 |
| 0.127mm | 2.28 | 2.28 |
| 0.152mm | 2.1 | 2.1 |
| 0.178mm | 2.0 | 2.0 |

NOTES:
A. All linear dimensions are in millimeters.
B. This drawing is subject to change without notice.
C. Publication IPC–7351 is recommended for alternate designs.
D. This package is designed to be soldered to a thermal pad on the board. Refer to Technical Brief, PowerPad Thermally Enhanced Package, Texas Instruments Literature No. SLMA002, SLMA004, and also the Product Data Sheets for specific thermal information, via requirements, and recommended board layout. These documents are available at www.ti.com <http://www.ti.com>. Publication IPC–7351 is recommended for alternate designs.
E. Laser cutting apertures with trapezoidal walls and also rounding corners will offer better paste release. Customers should contact their board assembly site for stencil design recommendations. Example stencil design based on a 50% volumetric metal load solder paste. Refer to IPC–7525 for other stencil recommendations.
F. Customers should contact their board fabrication site for solder mask tolerances between and around signal pads.

PowerPAD is a trademark of Texas Instruments.

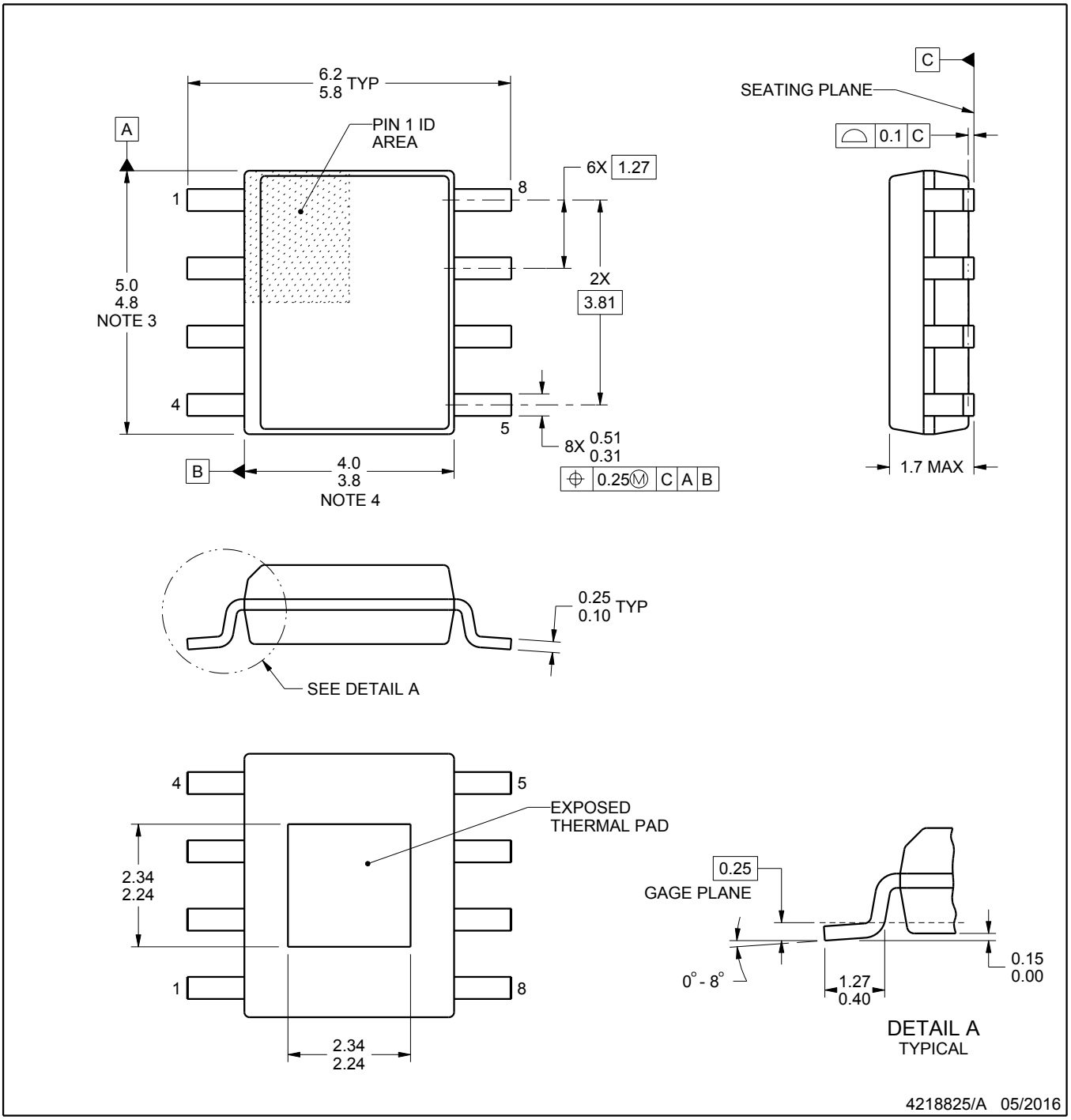


PowerPAD is a trademark of Texas Instruments.

NOTES:

1. All linear dimensions are in millimeters. Any dimensions in parenthesis are for reference only. Dimensioning and tolerancing per ASME Y14.5M.
2. This drawing is subject to change without notice.
3. This dimension does not include mold flash, protrusions, or gate burrs. Mold flash, protrusions, or gate burrs shall not exceed 0.15 mm per side.
4. This dimension does not include interlead flash. Interlead flash shall not exceed 0.25 mm per side.
5. Reference JEDEC registration MS-012.

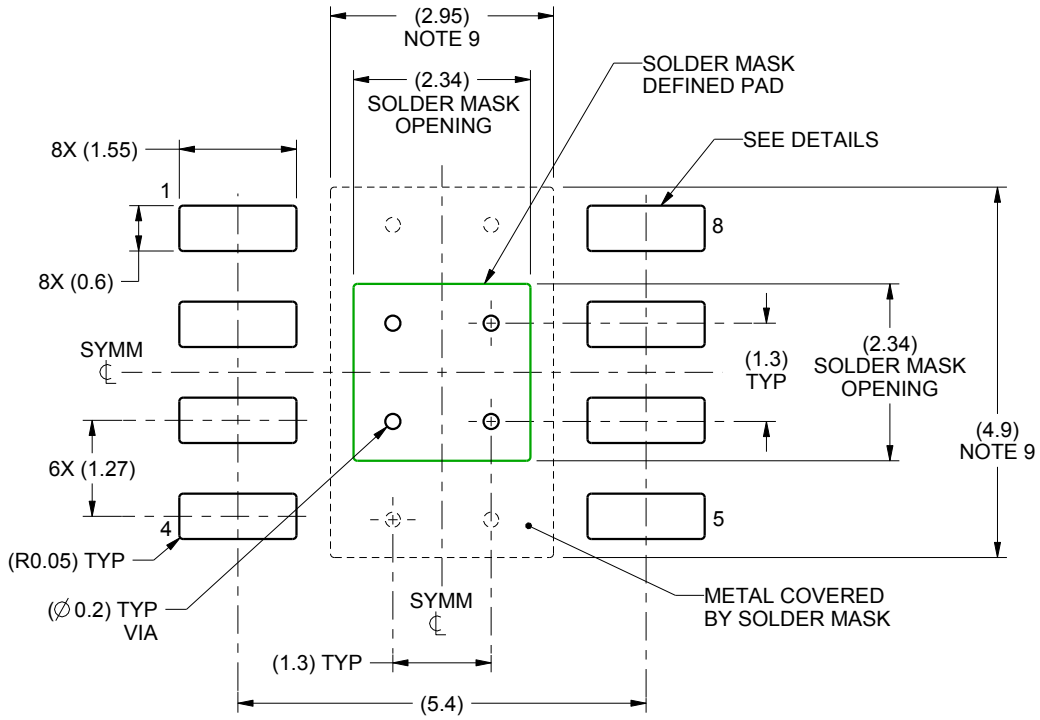


LAND PATTERN EXAMPLE
SCALE:10X

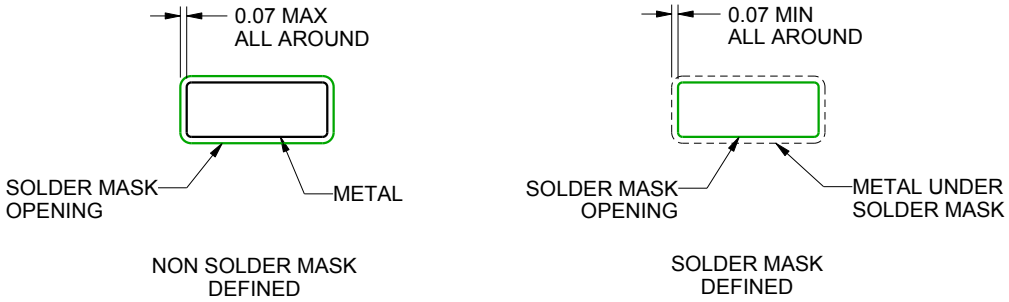


SOLDER MASK DETAILS

4218825/A 05/2016

NOTES: (continued)

6. Publication IPC-7351 may have alternate designs.
7. Solder mask tolerances between and around signal pads can vary based on board fabrication site.
8. This package is designed to be soldered to a thermal pad on the board. For more information, see Texas Instruments literature numbers SLMA002 (www.ti.com/lit/slma002) and SLMA004 (www.ti.com/lit/slma004).
9. Size of metal pad may vary due to creepage requirement.
10. Vias are optional depending on application, refer to device data sheet. If any vias are implemented, refer to their locations shown on this view. It is recommended that vias under paste be filled, plugged or tented.

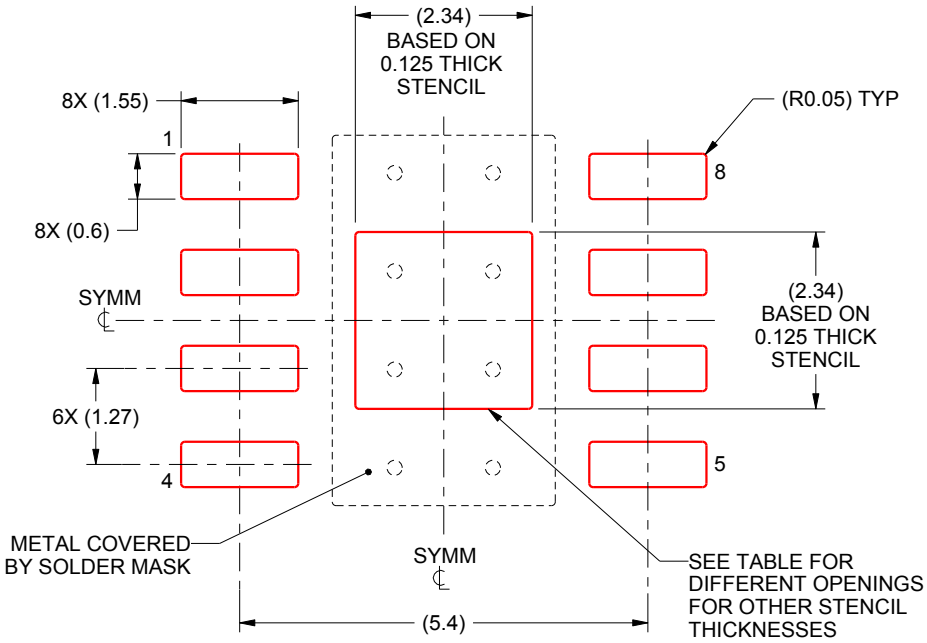


SOLDER PASTE EXAMPLE
EXPOSED PAD
100% PRINTED SOLDER COVERAGE BY AREA
SCALE:10X

| STENCIL THICKNESS | SOLDER STENCIL OPENING |
|---|---|
| 0.1 | 2.62 X 2.62 |
| 0.125 | 2.34 X 2.34 (SHOWN) |
| 0.150 | 2.14 X 2.14 |
| 0.175 | 1.98 X 1.98 |

4218825/A 05/2016

NOTES: (continued)

11. Laser cutting apertures with trapezoidal walls and rounded corners may offer better paste release. IPC-7525 may have alternate design recommendations.
12. Board assembly site may have different recommendations for stencil design.

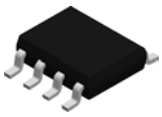

# PACKAGE OUTLINE

## D0008A

## SOIC - 1.75 mm max height

SMALL OUTLINE INTEGRATED CIRCUIT

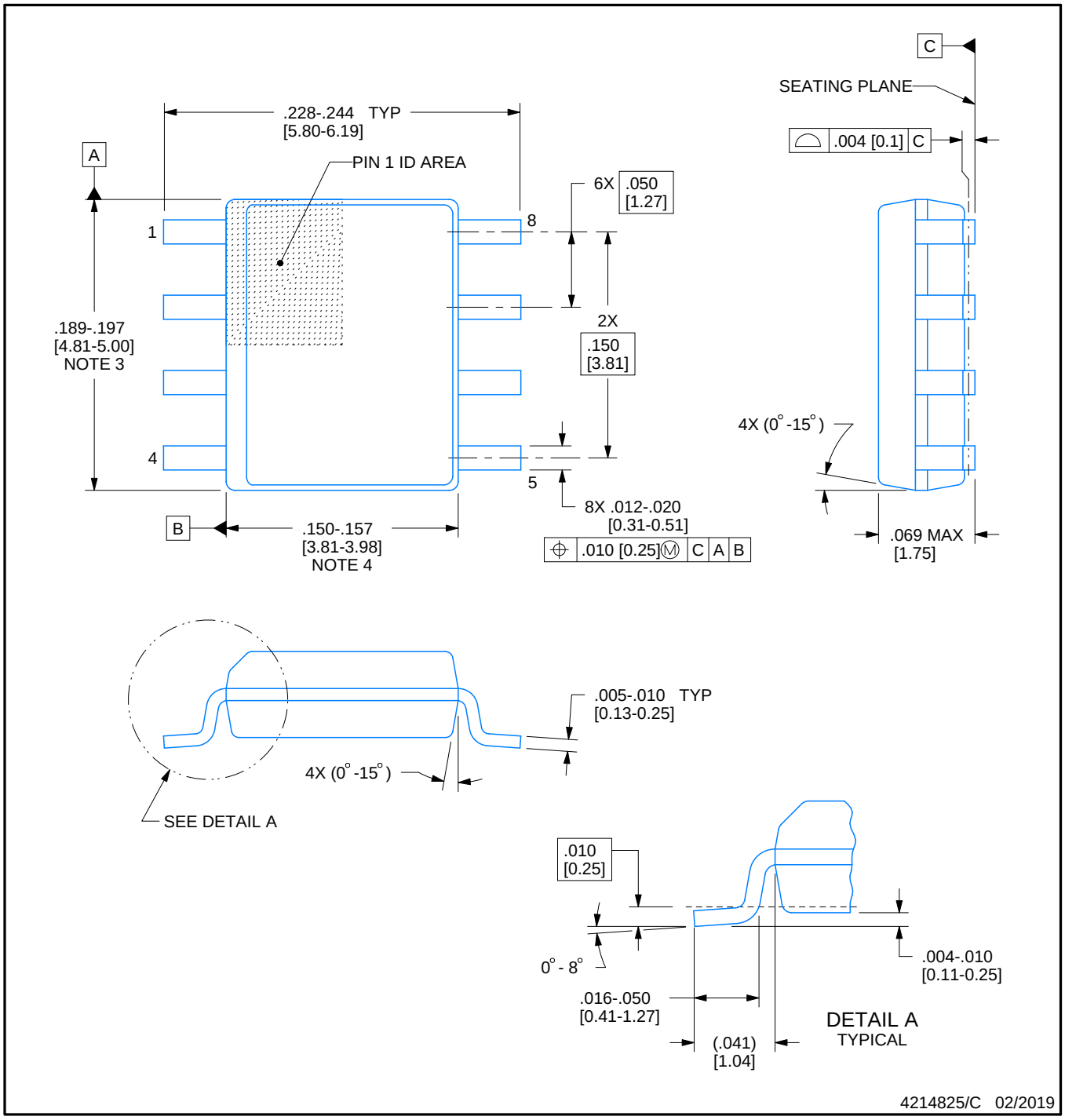


NOTES:

1. Linear dimensions are in inches [millimeters]. Dimensions in parenthesis are for reference only. Controlling dimensions are in inches. Dimensioning and tolerancing per ASME Y14.5M.
2. This drawing is subject to change without notice.
3. This dimension does not include mold flash, protrusions, or gate burrs. Mold flash, protrusions, or gate burrs shall not exceed .006 [0.15] per side.
4. This dimension does not include interlead flash.
5. Reference JEDEC registration MS-012, variation AA.

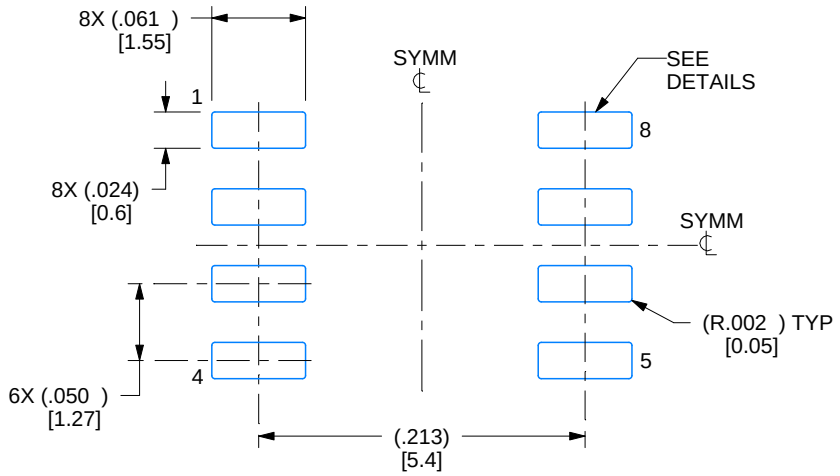


LAND PATTERN EXAMPLE
EXPOSED METAL SHOWN
SCALE:8X

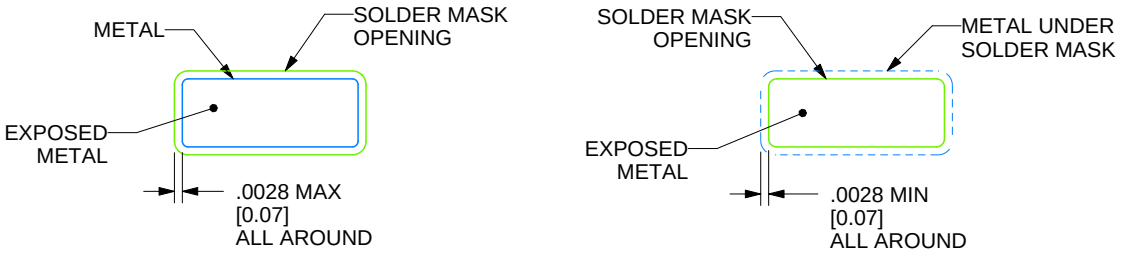


SOLDER MASK DETAILS

4214825/C 02/2019

NOTES: (continued)

6. Publication IPC-7351 may have alternate designs.
7. Solder mask tolerances between and around signal pads can vary based on board fabrication site.

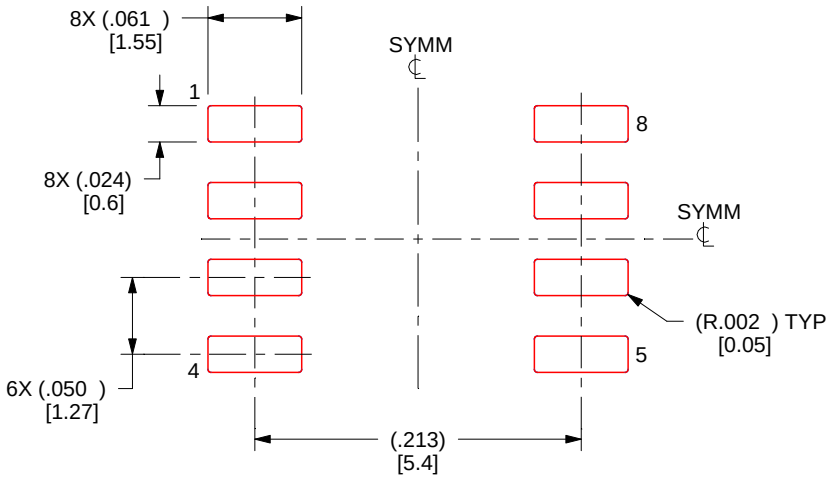


SOLDER PASTE EXAMPLE
BASED ON .005 INCH [0.125 MM] THICK STENCIL
SCALE:8X

4214825/C 02/2019

NOTES: (continued)

8. Laser cutting apertures with trapezoidal walls and rounded corners may offer better paste release. IPC-7525 may have alternate design recommendations.
9. Board assembly site may have different recommendations for stencil design.

# IMPORTANT NOTICE AND DISCLAIMER

TI PROVIDES TECHNICAL AND RELIABILITY DATA (INCLUDING DATA SHEETS), DESIGN RESOURCES (INCLUDING REFERENCE DESIGNS), APPLICATION OR OTHER DESIGN ADVICE, WEB TOOLS, SAFETY INFORMATION, AND OTHER RESOURCES “AS IS” AND WITH ALL FAULTS, AND DISCLAIMS ALL WARRANTIES, EXPRESS AND IMPLIED, INCLUDING WITHOUT LIMITATION ANY IMPLIED WARRANTIES OF MERCHANTABILITY, FITNESS FOR A PARTICULAR PURPOSE OR NON-INFRINGEMENT OF THIRD PARTY INTELLECTUAL PROPERTY RIGHTS.

These resources are intended for skilled developers designing with TI products. You are solely responsible for (1) selecting the appropriate TI products for your application, (2) designing, validating and testing your application, and (3) ensuring your application meets applicable standards, and any other safety, security, regulatory or other requirements.

These resources are subject to change without notice. TI grants you permission to use these resources only for development of an application that uses the TI products described in the resource. Other reproduction and display of these resources is prohibited. No license is granted to any other TI intellectual property right or to any third party intellectual property right. TI disclaims responsibility for, and you will fully indemnify TI and its representatives against, any claims, damages, costs, losses, and liabilities arising out of your use of these resources.

TI’s products are provided subject to TI’s Terms of Sale or other applicable terms available either on ti.com or provided in conjunction with such TI products. TI’s provision of these resources does not expand or otherwise alter TI’s applicable warranties or warranty disclaimers for TI products.

TI objects to and rejects any additional or different terms you may have proposed.

Mailing Address: Texas Instruments, Post Office Box 655303, Dallas, Texas 75265
Copyright © 2022, Texas Instruments Incorporated