TEXAS INSTRUMENTS

LT1013, LT1013D, LT1013M, LT1013AM

SLOS018I – MAY 1988 – REVISED JULY 2016

LT1013x Dual Precision Operational Amplifier

1 Features

- Single-Supply Operation
  - Input Voltage Range Extends to Ground
  - Output Swings to Ground While Sinking Current
- Phase Reversal Protection
- Input Offset Voltage
  - 150 µV Maximum at 25°C for LT1013AM
- Offset-Voltage Temperature Coefficient
  - 2 µV/°C Maximum for LT1013AM
- Input Offset Current
  - 0.8 nA Maximum at 25°C for LT1013AM
- High Gain
  - 1.5 V/µV Minimum (R_L = 2 kΩ) for LT1013AM
  - 0.8 V/µV Minimum (R_L = 600 kΩ) for LT1013AM
- Low Supply Current
  - 0.5 mA Maximum at T_A = 25°C for LT1013AM
- Low Peak-to-Peak Noise Voltage
  - 0.55 µV Typical
- Low Current Noise
  - 0.07 pA/$\sqrt{Hz}$ Typical
- For Die Only Option, See LT1013-DIE

2 Applications

- Thermocouple Amplifiers
- Low-Side Current Measurement
- Instrumentation Amplifiers

3 Description

The LT1013x devices are dual precision operational amplifiers, featuring high gain, low supply current, low noise, and low-offset-voltage temperature coefficient.

The LT1013x devices can be operated from a single 5-V power supply; the common-mode input voltage range includes ground, and the output can also swing to within a few millivolts of ground. Crossover distortion is eliminated. The LT1013x can be operated with both dual ± 15-V and single 5-V supplies.

The LT1013C and LT1013D are characterized for operation from 0°C to 70°C. The LT1013DI is characterized for operation from −40°C to 105°C. The LT1013M, LT1013AM, and LT1013DM are characterized for operation over the full military temperature range of −55°C to 125°C.

Device Information[1]

PART NUMBER	PACKAGE (PINS)	BODY SIZE (NOM)
LT1013D LT1013DD	SOIC (8)	4.90 mm × 3.91 mm
LT1013P LT1013DP	PDIP (8)	9.81 mm × 6.35 mm
LT1013MFK LT1013AMFK	LCCC (20)	8.89 mm × 8.89 mm
LT1013MJG LT1013AMJG	CDIP (8)	9.60 mm × 6.67 mm

(1) For all available packages, see the orderable addendum at the end of the data sheet.

Symbol (Each Amplifier)

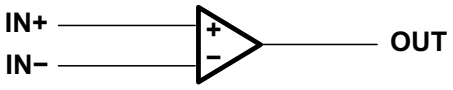

Copyright © 2016, Texas Instruments Incorporated

An IMPORTANT NOTICE at the end of this data sheet addresses availability, warranty, changes, use in safety-critical applications, intellectual property matters and other important disclaimers. PRODUCTION DATA.

Table of Contents

1 Features ... 1
2 Applications ... 1
3 Description ... 1
4 Revision History ... 2
5 Pin Configuration and Functions ... 3
6 Specifications ... 4
6.1 Absolute Maximum Ratings ... 4
6.2 ESD Ratings ... 4
6.3 Recommended Operating Conditions ... 4
6.4 Thermal Information ... 5
6.5 Electrical Characteristics: LT1013C, ±15 V ... 5
6.6 Electrical Characteristics: LT1013C, 5 V ... 6
6.7 Electrical Characteristics: LT1013D, ±15 V ... 6
6.8 Electrical Characteristics: LT1013D, 5 V ... 7
6.9 Electrical Characteristics: LT1013DI, ±15 V ... 7
6.10 Electrical Characteristics: LT1013DI, 5 V ... 8
6.11 Electrical Characteristics: LT1013M, ±15 V ... 8
6.12 Electrical Characteristics: LT1013M, 5 V ... 9
6.13 Electrical Characteristics: LT1013AM, ±15 V ... 9
6.14 Electrical Characteristics: LT1013AM, 5 V ... 10
6.15 Electrical Characteristics: LT1013DM, ±15 V ... 10
6.16 Electrical Characteristics: LT1013DM, 5 V ... 11
6.17 Operating Characteristics ... 11
6.18 Typical Characteristics ... 12
7 Detailed Description ... 17
7.1 Overview ... 17
7.2 Functional Block Diagram ... 17
7.3 Feature Description ... 17
7.4 Device Functional Modes ... 19
8 Application and Implementation ... 20
8.1 Application Information ... 20
8.2 Typical Application ... 20
9 Power Supply Recommendations ... 21
10 Layout ... 21
10.1 Layout Guidelines ... 21
10.2 Layout Examples ... 22
11 Device and Documentation Support ... 23
11.1 Device Support ... 23
11.2 Related Links ... 23
11.3 Receiving Notification of Documentation Updates 23
11.4 Community Resources ... 23
11.5 Trademarks ... 23
11.6 Electrostatic Discharge Caution ... 23
11.7 Glossary ... 23
12 Mechanical, Packaging, and Orderable Information ... 24

4 Revision History

Changes from Revision H (November 2004) to Revision I **Page**

- Added *ESD Ratings* table, *Feature Description* section, *Device Functional Modes*, *Application and Implementation* section, *Power Supply Recommendations* section, *Layout* section, *Device and Documentation Support* section, and *Mechanical, Packaging, and Orderable Information* section. ... 1
- Removed *Ordering Information* table, see POA at the end of the data sheet ... 1

Copyright © 1988–2016, Texas Instruments Incorporated

5 Pin Configuration and Functions

LT1013 and LT1013D D Package
8-Pin SOIC
Top View

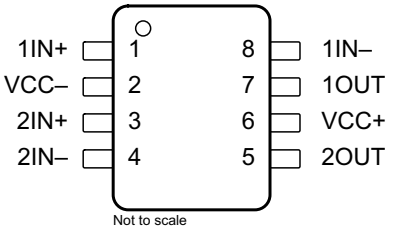

LT1013M and LT1013AM JG Package
or LT1013 and LT1013D P Package
8-Pin CDIP or PDIP
Top View

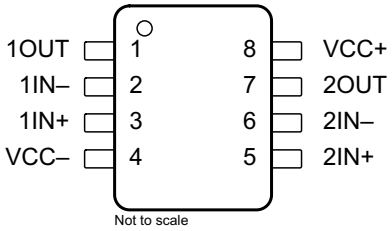

LT1013M and LT1013AM FK Package
20-Pin LCCC
Top View

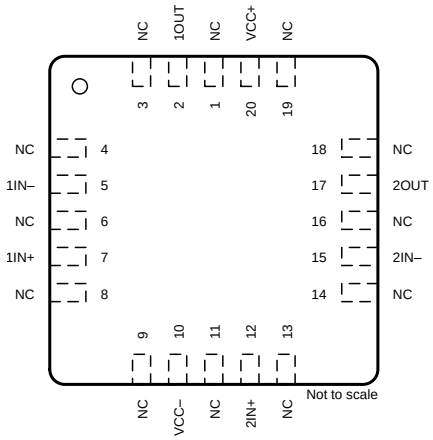

Pin Functions

PIN				I/O	DESCRIPTION
NAME	SOIC	LCCC	CDIP, PDIP		
1IN+	1	7	3	I	Noninverting input for channel 1
1IN–	8	5	2	I	Inverting input for channel 1
1OUT	7	2	1	O	Output for channel 1
2IN+	3	12	5	I	Noninverting input for channel 2
2IN–	4	15	6	I	Inverting input for channel 2
2OUT	5	17	7	O	Output for channel 2
NC	—	1, 3, 4, 6, 8, 9, 11, 13, 14, 16, 18, 19	—	—	No internal connection
VCC+	6	20	8	—	Positive supply Voltage
VCC–	2	10	4	—	Negative supply Voltage

Copyright © 1988–2016, Texas Instruments Incorporated

6 Specifications

6.1 Absolute Maximum Ratings

over operating free-air temperature range (unless otherwise noted)(1)

			MIN	MAX	UNIT
$V_{CC+} - V_{CC-}$	Supply voltage(2)		–0.3	44	V
V_I	Input voltage (any input)		$V_{CC-} - 5$	V_{CC+}	V
	Differential input voltage(3)			±30	V
	Duration of short-circuit current at (or below) 25°C(4)		Unlimited		
	Case temperature for 60 s	FK package		260	°C
	Lead temperature 1,6 mm (1/16 inch) from case for 10 s	JG package		300	°C
T_J	Operating virtual junction temperature			150	°C
T_{stg}	Storage temperature		–65	150	°C

(1) Stresses beyond those listed under *Absolute Maximum Ratings* may cause permanent damage to the device. These are stress ratings only, which do not imply functional operation of the device at these or any other conditions beyond those indicated under *Recommended Operating Conditions*. Exposure to absolute-maximum-rated conditions for extended periods may affect device reliability.
(2) Supply voltage is V_{CC+} with respect to V_{CC-}.
(3) Differential voltage is IN+ with respect to IN−.
(4) The output may be shorted to either supply.

6.2 ESD Ratings

			VALUE	UNIT
LT1013 in D and P packages				
$V_{(ESD)}$	Electrostatic discharge	Human-body model (HBM), per ANSI/ESDA/JEDEC JS-001(1)	±1000	V
		Charged-device model (CDM), per JEDEC specification JESD22-C101(2)	±500	
LT1013D in D and P packages				
$V_{(ESD)}$	Electrostatic discharge	Human-body model (HBM), per ANSI/ESDA/JEDEC JS-001(1)	±1000	V
		Charged-device model (CDM), per JEDEC specification JESD22-C101(2)	±500	

(1) JEDEC document JEP155 states that 500-V HBM allows safe manufacturing with a standard ESD control process.
(2) JEDEC document JEP157 states that 250-V CDM allows safe manufacturing with a standard ESD control process.

6.3 Recommended Operating Conditions

over operating free-air temperature range (unless otherwise noted)

			MIN	MAX	UNIT
$V_{CC+} - V_{CC-}$	Supply voltage		5	30	V
T_A	Ambient temperature	LT1013C, LT1013D	0	70	°C
		LT1013DI	–40	105	
		LT1013M, LT1013AM, LT1013DM	–55	125	
V_{ICM}	Input common-mode voltage	LT1013C, LT1013D, LT1013DI	V_{CC-}	$V_{CC+} - 2$	V
		LT1013M, LT1013AM, LT1013DM	$V_{CC-} + 0.1$	$V_{CC+} - 2$	

Copyright © 1988–2016, Texas Instruments Incorporated

6.4 Thermal Information

THERMAL METRIC[1]		LT1013x				UNIT
		D (SOIC)	P (PDIP)	FK (LCCC)	JG (CDIP)	
		8 PINS	8 PINS	20 PINS	8 PINS	
$R_{\theta JA}$	Junction-to-ambient thermal resistance[2][3]	101.6	49.5	—	—	°C/W
$R_{\theta JC(top)}$	Junction-to-case (top) thermal resistance	47.6	38.7	35.7[4]	58.5[4]	°C/W
$R_{\theta JB}$	Junction-to-board thermal resistance	42	26.7	34.8	82.9	°C/W
ψ_{JT}	Junction-to-top characterization parameter	8.3	15.9	—	—	°C/W
ψ_{JB}	Junction-to-board characterization parameter	41.5	26.6	—	—	°C/W
$R_{\theta JC(bot)}$	Junction-to-case (bottom) thermal resistance	—	—	4.0[4]	10.8[4]	°C/W

(1) For more information about traditional and new thermal metrics, see the *Semiconductor and IC Package Thermal Metrics* application report.
(2) Maximum power dissipation is a function of $T_{J(max)}$, $R_{\theta JA}$, and T_A. The maximum allowable power dissipation at any allowable ambient temperature is $P_D = (T_{J(max)} - T_A)/ R_{\theta JA}$. Operating at the absolute maximum T_J of 150°C can affect reliability. Due to variation in individual device electrical characteristics and thermal resistance, the built-in thermal overload protection may be activated at power levels slightly above or below the rated dissipation.
(3) The package thermal impedance is calculated in accordance with JESD 51-7.
(4) $R_{\theta JC(top)}$ and $R_{\theta JC(bot)}$thermal impedances are calculated in accordance with MIL-STD-883 for LCCC and CDIP

6.5 Electrical Characteristics: LT1013C, ±15 V

at specified free-air temperature, $V_{CC\pm}$ = ±15 V, V_{IC} = 0 (unless otherwise noted)

PARAMETER		TEST CONDITIONS	T_A[1]	MIN	TYP[2]	MAX	UNIT
V_{IO}	Input offset voltage	R_S = 50 Ω	25°C		60	300	µV
			Full range			400	
α_{VIO}	Temperature coefficient of input offset voltage		Full range		0.4	2.5	µV/°C
	Long-term drift of input offset voltage		25°C		0.5		µV/mo
I_{IO}	Input offset current		25°C		0.2	1.5	nA
			Full range			2.8	
I_{IB}	Input bias current		25°C		–15	–30	nA
			Full range			–38	
V_{ICR}	Common-mode input voltage range	Recommended range	25°C	–15		13.5	V
			Full range	–15		13	
V_{OM}	Maximum peak output voltage swing	R_L = 2 kΩ	25°C	±12.5	±14		V
			Full range	±12			
A_{VD}	Large-signal differential voltage amplification	V_O = ±10 V, R_L = 600 Ω	25°C	0.5	0.2		V/µV
		V_O = ±10 V, R_L = 2 kΩ	25°C	1.2	7		
			Full range	0.7			
CMRR	Common-mode rejection ratio	V_{IC} = −15 V to 13.5 V	25°C	97	114		dB
		V_{IC} = −14.9 V to 13 V	Full range	94			
k_{SVR}	Supply-voltage rejection ratio (ΔVCC/ΔVIO)	V_{CC+} = ±2 V to ±18 V	25°C	100	117		dB
			Full range	97			
	Channel separation	V_O = ±10 V, R_L = 2 kΩ	25°C	120	137		dB
r_{id}	Differential input resistance		25°C	70	300		MΩ
r_{ic}	Common-mode input resistance		25°C		4		GΩ
I_{CC}	Supply current per amplifier		25°C		0.35	0.55	mA
			Full range			0.7	

(1) Full range is 0°C to 70°C.
(2) All typical values are at T_A = 25°C.

Copyright © 1988–2016, Texas Instruments Incorporated

6.6 Electrical Characteristics: LT1013C, 5 V

at specified free-air temperature, V_{CC+} = 5 V, V_{CC-} = 0, V_O = 1.4 V, V_{IC} = 0 (unless otherwise noted)

PARAMETER		TEST CONDITIONS	T_A (1)	MIN	TYP (2)	MAX	UNIT
V_{IO}	Input offset voltage	R_S = 50 Ω	25°C		90	450	µV
			Full range			570	
I_{IO}	Input offset current		25°C		0.3	2	nA
			Full range			6	
I_{IB}	Input bias current		25°C		–18	–50	nA
			Full range			–90	
V_{ICR}	Common-mode input voltage range	Recommended range	25°C	0		3.5	V
			Full range	0		3	
V_{OM}	Maximum peak output voltage swing	Output low, No load	25°C		15	25	V
		Output low, R_L = 600 Ω to GND	25°C		5	10	
			Full range			13	
		Output low, I_{sink} = 1 mA	25°C		220	350	
		Output high, No load	25°C	4	4.4		
		Output high, R_L = 600 Ω to GND	25°C	3.4	4		
			Full range	3.2			
A_{VD}	Large-signal differential voltage amplification	V_O = 5 mV to 4 V, R_L = 500 Ω	25°C		1		V/µV
I_{CC}	Supply current per amplifier		25°C		0.32	0.5	mA
			Full range			0.55	

(1) Full range is 0°C to 70°C.
(2) All typical values are at T_A = 25°C.

6.7 Electrical Characteristics: LT1013D, ±15 V

at specified free-air temperature, $V_{CC\pm}$ = ±15 V, V_{IC} = 0 (unless otherwise noted)

PARAMETER		TEST CONDITIONS	T_A (1)	MIN	TYP (2)	MAX	UNIT
V_{IO}	Input offset voltage	R_S = 50 Ω	25°C		200	800	µV
			Full range			1000	
α_{VIO}	Temperature coefficient of input offset voltage		Full range		0.7	5	µV/°C
	Long-term drift of input offset voltage		25°C		0.5		µV/mo
I_{IO}	Input offset current		25°C		0.2	1.5	nA
			Full range			2.8	
I_{IB}	Input bias current		25°C		–15	–30	nA
			Full range			–38	
V_{ICR}	Common-mode input voltage range	Recommended range	25°C	–15		13.5	V
			Full range	–15		13	
V_{OM}	Maximum peak output voltage swing	R_L = 2 kΩ	25°C	±12.5	±14		V
			Full range	±12			
A_{VD}	Large-signal differential voltage amplification	V_O = ±10 V, R_L = 600 Ω	25°C	0.5	2		V/µV
		V_O = ±10 V, R_L = 2 kΩ	25°C	1.2	7		
			Full range	0.7			
CMRR	Common-mode rejection ratio	V_{IC} = −15 V to 13.5 V	25°C	97	114		dB
		V_{IC} = −14.9 V to 13 V	Full range	94			
k_{SVR}	Supply-voltage rejection ratio (ΔVCC/ΔVIO)	V_{CC+} = ±2 V to ±18 V	25°C	100	117		dB
			Full range	97			
	Channel separation	V_O = ±10 V, R_L = 2 kΩ	25°C	120	137		dB
r_{id}	Differential input resistance		25°C	70	300		MΩ
r_{ic}	Common-mode input resistance		25°C		4		GΩ
I_{CC}	Supply current per amplifier		25°C		0.35	0.55	mA
			Full range			0.6	

(1) Full range is 0°C to 70°C.
(2) All typical values are at T_A = 25°C.

Copyright © 1988–2016, Texas Instruments Incorporated

6.8 Electrical Characteristics: LT1013D, 5 V

at specified free-air temperature, V_{CC+} = 5 V, V_{CC-} = 0, V_O = 1.4 V, V_{IC} = 0 (unless otherwise noted)

PARAMETER		TEST CONDITIONS	T_A (1)	MIN	TYP (2)	MAX	UNIT
V_{IO}	Input offset voltage	R_S = 50 Ω	25°C		250	950	µV
			Full range			1200	
I_{IO}	Input offset current		25°C		0.3	2	nA
			Full range			6	
I_{IB}	Input bias current		25°C		–18	–50	nA
			Full range			–90	
V_{ICR}	Common-mode input voltage range	Recommended range	25°C	0		3.5	V
			Full range	0		3	
V_{OM}	Maximum peak output voltage swing	Output low, No load	25°C		15	25	V
		Output low, R_L = 600 Ω to GND	25°C		5	10	
			Full range			13	
		Output low, I_{sink} = 1 mA	25°C		220	350	
		Output high, No load	25°C	4	4.4		
		Output high, R_L = 600 Ω to GND	25°C	3.4	4		
			Full range	3.2			
A_{VD}	Large-signal differential voltage amplification	V_O = 5 mV to 4 V, R_L = 500 Ω	25°C		1		V/µV
I_{CC}	Supply current per amplifier		25°C		0.32	0.5	mA
			Full range			0.55	

(1) Full range is 0°C to 70°C.
(2) All typical values are at T_A = 25°C.

6.9 Electrical Characteristics: LT1013DI, ±15 V

at specified free-air temperature, $V_{CC\pm}$ = ±15 V, V_{IC} = 0 (unless otherwise noted)

PARAMETER		TEST CONDITIONS	T_A (1)	MIN	TYP (2)	MAX	UNIT
V_{IO}	Input offset voltage	R_S = 50 Ω	25°C		200	800	µV
			Full range			1000	
α_{VIO}	Temperature coefficient of input offset voltage		Full range		0.7	5	µV/°C
	Long-term drift of input offset voltage		25°C		0.5		µV/mo
I_{IO}	Input offset current		25°C		0.2	1.5	nA
			Full range			2.8	
I_{IB}	Input bias current		25°C		–15	–30	nA
			Full range			–38	
V_{ICR}	Common-mode input voltage range	Recommended range	25°C	–15		13.5	V
			Full range	–15		13	
V_{OM}	Maximum peak output voltage swing	R_L = 2 kΩ	25°C	±12.5	±14		V
			Full range	±12			
A_{VD}	Large-signal differential voltage amplification	V_O = ±10 V, R_L = 600 Ω	25°C	0.5	0.2		V/µV
		V_O = ±10 V, R_L = 2 kΩ	25°C	1.2	7		
			Full range	0.7			
CMRR	Common-mode rejection ratio	V_{IC} = −15 V to 13.5 V	25°C	97	114		dB
		V_{IC} = −14.9 V to 13 V	Full range	94			
k_{SVR}	Supply-voltage rejection ratio (ΔVCC/ΔVIO)	V_{CC+} = ±2 V to ±18 V	25°C	100	117		dB
			Full range	97			
	Channel separation	V_O = ±10 V, R_L = 2 kΩ	25°C	120	137		dB
r_{id}	Differential input resistance		25°C	70	300		MΩ
r_{ic}	Common-mode input resistance		25°C		4		GΩ
I_{CC}	Supply current per amplifier		25°C		0.35	0.55	mA
			Full range			0.6	

(1) Full range is –40°C to 105°C.
(2) All typical values are at T_A = 25°C.

Copyright © 1988–2016, Texas Instruments Incorporated

6.10 Electrical Characteristics: LT1013DI, 5 V

at specified free-air temperature, V_{CC+} = 5 V, V_{CC-} = 0, V_O = 1.4 V, V_{IC} = 0 (unless otherwise noted)

PARAMETER		TEST CONDITIONS	T_A (1)	MIN	TYP (2)	MAX	UNIT
V_{IO}	Input offset voltage	R_S = 50 Ω	25°C		250	950	µV
			Full range			1200	
I_{IO}	Input offset current		25°C		0.3	2	nA
			Full range			6	
I_{IB}	Input bias current		25°C		–18	–50	nA
			Full range			–90	
V_{ICR}	Common-mode input voltage range	Recommended range	25°C	0		3.5	V
			Full range	0		3	
V_{OM}	Maximum peak output voltage swing	Output low, No load	25°C		15	25	V
		Output low, R_L = 600 Ω to GND	25°C		5	10	
			Full range			13	
		Output low, I_{sink} = 1 mA	25°C		220	350	
		Output high, No load	25°C	4	4.4		
		Output high, R_L = 600 Ω to GND	25°C	3.4	4		
			Full range	3.2			
A_{VD}	Large-signal differential voltage amplification	V_O = 5 mV to 4 V, R_L = 500 Ω	25°C		1		V/µV
I_{CC}	Supply current per amplifier		25°C		0.32	0.5	mA
			Full range			0.55	

(1) Full range is –40°C to 105°C.
(2) All typical values are at T_A = 25°C.

6.11 Electrical Characteristics: LT1013M, ±15 V

at specified free-air temperature, $V_{CC\pm}$ = ±15 V, V_{IC} = 0 (unless otherwise noted)

PARAMETER		TEST CONDITIONS	T_A (1)	MIN	TYP (2)	MAX	UNIT
V_{IO}	Input offset voltage	R_S = 50 Ω	25°C		60	300	µV
			Full range			550	
α_{VIO}	Temperature coefficient of input offset voltage		Full range		0.5	2.5 (3)	µV/°C
	Long-term drift of input offset voltage		25°C		0.5		µV/mo
I_{IO}	Input offset current		25°C		0.2	1.5	nA
			Full range			5	
I_{IB}	Input bias current		25°C		–15	–30	nA
			Full range			–45	
V_{ICR}	Common-mode input voltage range	Recommended range	25°C	–15		13.5	V
			Full range	–14.9		13	
V_{OM}	Maximum peak output voltage swing	R_L = 2 kΩ	25°C	±12.5	±14		V
			Full range	±11.5			
A_{VD}	Large-signal differential voltage amplification	V_O = ±10 V, R_L = 600 Ω	25°C	0.5	2		V/µV
		V_O = ±10 V, R_L = 2 kΩ	25°C	1.2	7		
			Full range	0.25			
CMRR	Common-mode rejection ratio	V_{IC} = −15 V to 13.5 V	25°C	97	117		dB
		V_{IC} = −14.9 V to 13 V	Full range	94			
k_{SVR}	Supply-voltage rejection ratio (ΔVCC/ΔVIO)	V_{CC+} = ±2 V to ±18 V	25°C	100	117		dB
			Full range	97			
	Channel separation	V_O = ±10 V, R_L = 2 kΩ	25°C	120	137		dB
r_{id}	Differential input resistance		25°C	70	300		MΩ
r_{ic}	Common-mode input resistance		25°C		4		GΩ
I_{CC}	Supply current per amplifier		25°C		0.35	0.55	mA
			Full range			0.7	

(1) Full range is –55°C to 125°C.
(2) All typical values are at T_A = 25°C.
(3) On products compliant to MIL-PRF-38535, Class B, this parameter is not production tested.

Copyright © 1988–2016, Texas Instruments Incorporated

6.12 Electrical Characteristics: LT1013M, 5 V

at specified free-air temperature, V_{CC+} = 5 V, V_{CC-} = 0, V_O = 1.4 V, V_{IC} = 0 (unless otherwise noted)

PARAMETER		TEST CONDITIONS	T_A (1)	MIN	TYP (2)	MAX	UNIT
V_{IO}	Input offset voltage	R_S = 50 Ω	25°C		90	450	µV
			Full range		400	1500	
		R_S = 50 Ω, V_{IC} = 0.1 V	125°C		200	750	
I_{IO}	Input offset current		25°C		0.3	2	nA
			Full range			10	
I_{IB}	Input bias current		25°C		-18	–50	nA
			Full range			–120	
V_{ICR}	Common-mode input voltage range	Recommended range	25°C	0		3.5	V
			Full range	0		3	
V_{OM}	Maximum peak output voltage swing	Output low, No load	25°C		15	25	V
		Output low, R_L = 600 Ω to GND	25°C		5	10	
			Full range			18	
		Output low, I_{sink} = 1 mA	25°C		220	350	
		Output high, No load	25°C	4	4.4		
		Output high, R_L = 600 Ω to GND	25°C	3.4	4		
			Full range	3.1			
A_{VD}	Large-signal differential voltage amplification	V_O = 5 mV to 4 V, R_L = 500 Ω	25°C		1		V/µV
I_{CC}	Supply current per amplifier		25°C		0.32	0.5	mA
			Full range			0.65	

(1) Full range is –55°C to 125°C.
(2) All typical values are at T_A = 25°C.

6.13 Electrical Characteristics: LT1013AM, ±15 V

at specified free-air temperature, $V_{CC±}$ = ±15 V, V_{IC} = 0 (unless otherwise noted)

PARAMETER		TEST CONDITIONS	T_A (1)	MIN	TYP (2)	MAX	UNIT
V_{IO}	Input offset voltage	R_S = 50 Ω	25°C		40	150	µV
			Full range			300	
α_{VIO}	Temperature coefficient of input offset voltage		Full range		0.4	2 (3)	µV/°C
	Long-term drift of input offset voltage		25°C		0.4		µV/mo
I_{IO}	Input offset current		25°C		0.15	0.8	nA
			Full range			2.5	
I_{IB}	Input bias current		25°C		–12	–20	nA
			Full range			–30	
V_{ICR}	Common-mode input voltage range	Recommended range	25°C	–15		13.5	V
			Full range	–14.9		13	
V_{OM}	Maximum peak output voltage swing	R_L = 2 kΩ	25°C	±13	±14		V
			Full range	±12			
A_{VD}	Large-signal differential voltage amplification	V_O = ±10 V, R_L = 600 Ω	25°C	0.8	2.5		V/µV
		V_O = ±10 V, R_L = 2 kΩ	25°C	1.5	8		
			Full range	0.5			
CMRR	Common-mode rejection ratio	V_{IC} = −15 V to 13.5 V	25°C	100	117		dB
		V_{IC} = −14.9 V to 13 V	Full range	97			
k_{SVR}	Supply-voltage rejection ratio (ΔVCC/ΔVIO)	V_{CC+} = ±2 V to ±18 V	25°C	103	120		dB
			Full range	100			
	Channel separation	V_O = ±10 V, R_L = 2 kΩ	25°C	123	140		dB
r_{id}	Differential input resistance		25°C	100	400		MΩ
r_{ic}	Common-mode input resistance		25°C		5		GΩ
I_{CC}	Supply current per amplifier		25°C		0.35	0.5	mA
			Full range			0.6	

(1) Full range is –55°C to 125°C.
(2) All typical values are at T_A = 25°C.
(3) On products compliant to MIL-PRF-38535, Class B, this parameter is not production tested.

Copyright © 1988–2016, Texas Instruments Incorporated

6.14 Electrical Characteristics: LT1013AM, 5 V

at specified free-air temperature, V_{CC+} = 5 V, V_{CC-} = 0, V_O = 1.4 V, V_{IC} = 0 (unless otherwise noted)

PARAMETER		TEST CONDITIONS	T_A (1)	MIN	TYP (2)	MAX	UNIT
V_{IO}	Input offset voltage	R_S = 50 Ω	25°C		60	250	µV
			Full range		250	900	
		R_S = 50 Ω, V_{IC} = 0.1 V	125°C		120	450	
I_{IO}	Input offset current		25°C		0.2	1.3	nA
			Full range			6	
I_{IB}	Input bias current		25°C		–15	–35	nA
			Full range			–80	
V_{ICR}	Common-mode input voltage range	Recommended range	25°C	0		3.5	V
			Full range	0		3	
V_{OM}	Maximum peak output voltage swing	Output low, No load	25°C		15	25	V
		Output low, R_L = 600 Ω to GND	25°C		5	10	
			Full range			15	
		Output low, I_{sink} = 1 mA	25°C		220	350	
		Output high, No load	25°C	4	4.4		
		Output high, R_L = 600 Ω to GND	25°C	3.4	4		
			Full range	3.2			
A_{VD}	Large-signal differential voltage amplification	V_O = 5 mV to 4 V, R_L = 500 Ω	25°C		1		V/µV
I_{CC}	Supply current per amplifier		25°C		0.31	0.45	mA
			Full range			0.55	

(1) Full range is –55°C to 125°C.
(2) All typical values are at T_A = 25°C.

6.15 Electrical Characteristics: LT1013DM, ±15 V

at specified free-air temperature, $V_{CC±}$ = ±15 V, V_{IC} = 0 (unless otherwise noted)

PARAMETER		TEST CONDITIONS	T_A (1)	MIN	TYP (2)	MAX	UNIT
V_{IO}	Input offset voltage	R_S = 50 Ω	25°C		200	800	µV
			Full range			1000	
α_{VIO}	Temperature coefficient of input offset voltage		Full range		0.5	2.5 (3)	µV/°C
	Long-term drift of input offset voltage		25°C		0.5		µV/mo
I_{IO}	Input offset current		25°C		0.2	1.5	nA
			Full range			5	
I_{IB}	Input bias current		25°C		–15	–30	nA
			Full range			–45	
V_{ICR}	Common-mode input voltage range	Recommended range	25°C	–15		13.5	V
			Full range	–14.9		13	
V_{OM}	Maximum peak output voltage swing	R_L = 2 kΩ	25°C	±12.5	±14		V
			Full range	±11.5			
A_{VD}	Large-signal differential voltage amplification	V_O = ±10 V, R_L = 600 Ω	25°C	0.5	2		V/µV
		V_O = ±10 V, R_L = 2 kΩ	25°C	1.2	7		
			Full range	0.25			
CMRR	Common-mode rejection ratio	V_{IC} = −15 V to 13.5 V	25°C	97	114		dB
		V_{IC} = −14.9 V to 13 V	Full range	94			
k_{SVR}	Supply-voltage rejection ratio (ΔVCC/ΔVIO)	V_{CC+} = ±2 V to ±18 V	25°C	100	117		dB
			Full range	97			
	Channel separation	V_O = ±10 V, R_L = 2 kΩ	25°C	120	137		dB
r_{id}	Differential input resistance		25°C	70	300		MΩ
r_{ic}	Common-mode input resistance		25°C		4		GΩ
I_{CC}	Supply current per amplifier		25°C		0.35	0.55	mA
			Full range			0.7	

(1) Full range is –55°C to 125°C.
(2) All typical values are at T_A = 25°C.
(3) On products compliant to MIL-PRF-38535, Class B, this parameter is not production tested.

Copyright © 1988–2016, Texas Instruments Incorporated

6.16 Electrical Characteristics: LT1013DM, 5 V

at specified free-air temperature, V_{CC+} = 5 V, V_{CC-} = 0, V_O = 1.4 V, V_{IC} = 0 (unless otherwise noted)

PARAMETER		TEST CONDITIONS	T_A (1)	MIN	TYP (2)	MAX	UNIT
V_{IO}	Input offset voltage	R_S = 50 Ω	25°C		250	950	µV
			Full range		800	2000	
		R_S = 50 Ω, V_{IC} = 0.1 V	125°C		560	1200	
I_{IO}	Input offset current		25°C		0.3	2	nA
			Full range			10	
I_{IB}	Input bias current		25°C		–18	–50	nA
			Full range			–120	
V_{ICR}	Common-mode input voltage range	Recommended range	25°C	0		3.5	V
			Full range	0		3	
V_{OM}	Maximum peak output voltage swing	Output low, No load	25°C		15	25	V
		Output low, R_L = 600 Ω to GND	25°C		5	10	
			Full range			18	
		Output low, I_{sink} = 1 mA	25°C		220	350	
		Output high, No load	25°C	4	4.4		
		Output high, R_L = 600 Ω to GND	25°C	3.4	4		
			Full range	3.1			
A_{VD}	Large-signal differential voltage amplification	V_O = 5 mV to 4 V, R_L = 500 Ω	25°C		1		V/µV
I_{CC}	Supply current per amplifier		25°C		0.32	0.5	mA
			Full range			0.65	

(1) Full range is –55°C to 125°C.
(2) All typical values are at T_A = 25°C.

6.17 Operating Characteristics

$V_{CC±}$ = ±15 V, V_{IC} = 0, T_A = 25°C

PARAMETER		TEST CONDITIONS	MIN	TYP	MAX	UNIT
SR	Slew rate		0.2	0.4		V/µs
V_n	Equivalent input noise voltage	f = 10 Hz		24		nV/√Hz
		f = 1 kHz		22		
$V_{N(PP)}$	Peak-to-peak equivalent input noise voltage	f = 0.1 Hz to 10 Hz		0.55		µV
I_n	Equivalent input noise current	f = 10 Hz		0.07		pA/√Hz

Copyright © 1988–2016, Texas Instruments Incorporated

6.18 Typical Characteristics

Table 1. Table of Graphs

			FIGURE
V_{IO}	Input offset voltage	vs Input Resistance	Figure 1
		vs Temperature	Figure 2
ΔV_{IO}	Change in input offset voltage	vs Time	Figure 3
I_{IO}	Input offset current	vs Temperature	Figure 4
I_{IB}	Input bias current	vs Temperature	Figure 5
V_{IC}	Common-mode input voltage	vs Input bias current	Figure 6
A_{VD}	Differential voltage amplification	vs Load resistance	Figure 7, Figure 8
		vs Frequency	Figure 9, Figure 10
	Channel separation	vs Frequency	Figure 11
	Output saturation voltage	vs Temperature	Figure 12
CMRR	Common-mode rejection ratio	vs Frequency	Figure 13
k_{SVR}	Supply-voltage rejection ratio	vs Frequency	Figure 14
I_{CC}	Supply current	vs Temperature	Figure 15
I_{OS}	Short-circuit output current	vs Time	Figure 16
V_n	Equivalent input noise voltage	vs Frequency	Figure 17
I_n	Equivalent input noise current	vs Frequency	Figure 17
$V_{N(PP)}$	Peak-to-peak input noise voltage	vs Time	Figure 18
	Pulse response	Small signal	Figure 19, Figure 21
		Large signal	Figure 20, Figure 22, Figure 23
	Phase shift	vs Frequency	Figure 9

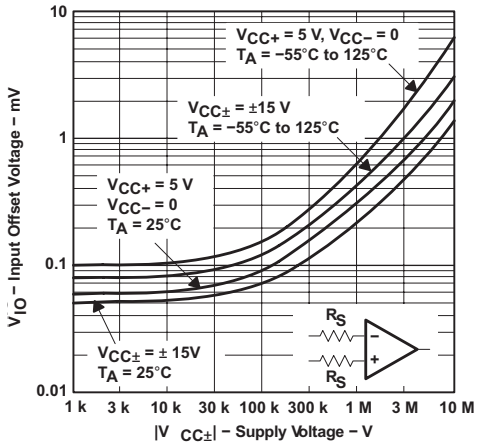

Figure 1. Input Offset Voltage vs Input Resistance

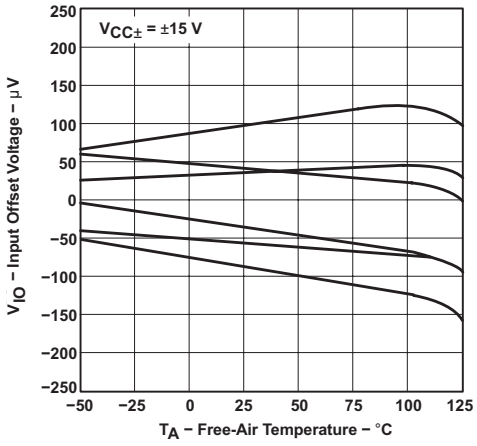

Figure 2. Input Offset Voltage of Representative Units vs Free-Air Temperature

Copyright © 1988–2016, Texas Instruments Incorporated

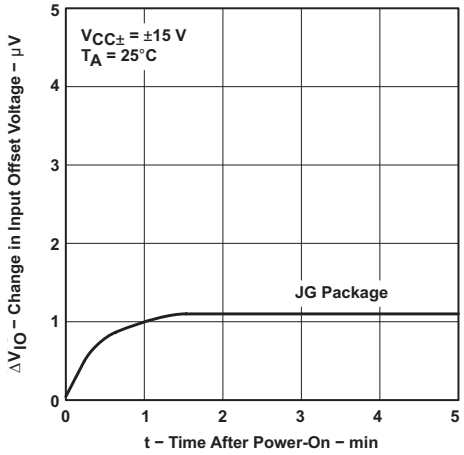

Figure 3. Warm-Up Change in Input Offset Voltage vs Time After Power On

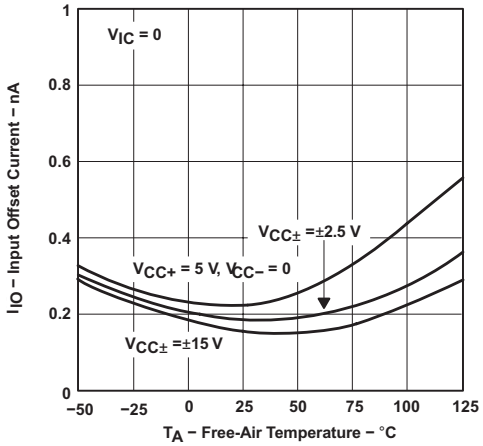

Figure 4. Input Offset Current vs Free-Air Temperature

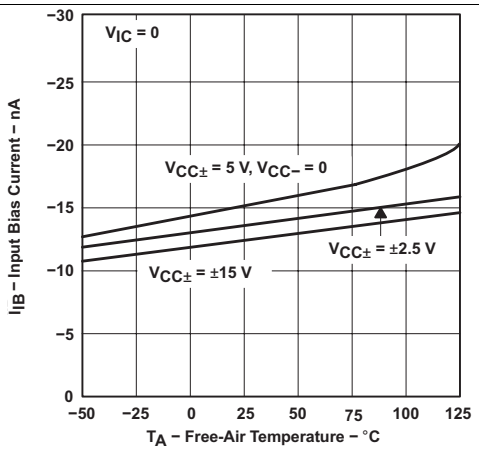

Figure 5. Input Bias Current vs Free-Air Temperature

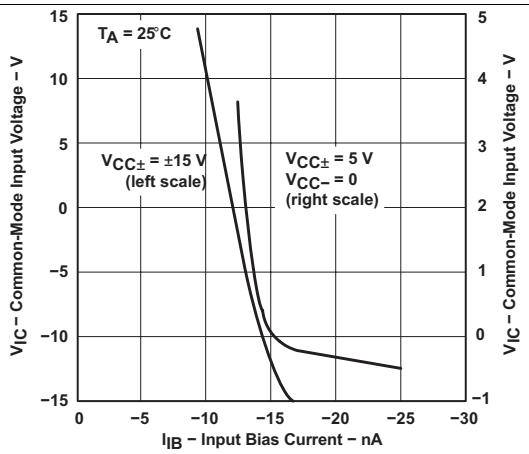

Figure 6. Common-Mode Input Voltage vs Input Bias Current

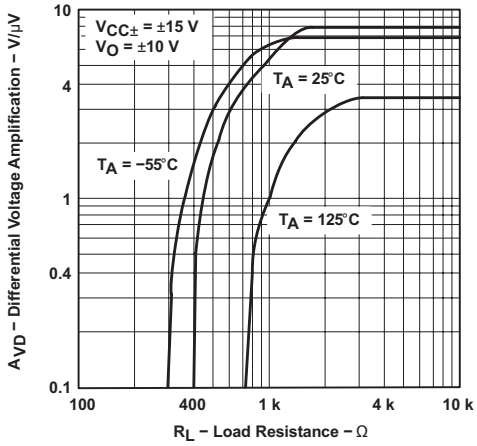

Figure 7. Differential Voltage Amplification vs Load Resistance

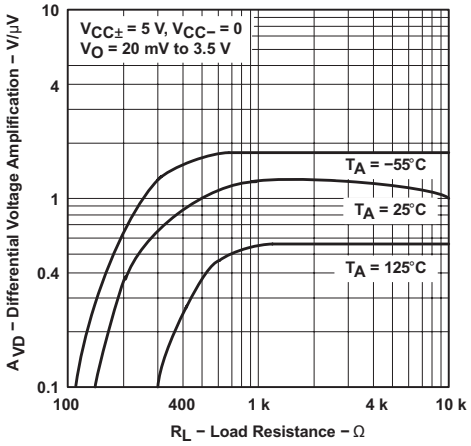

Figure 8. Differential Voltage Amplification vs Load Resistance

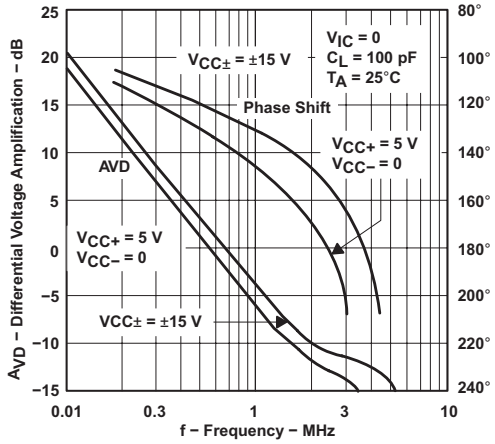

Figure 9. Differential Voltage Amplification and Phase Shift vs Frequency

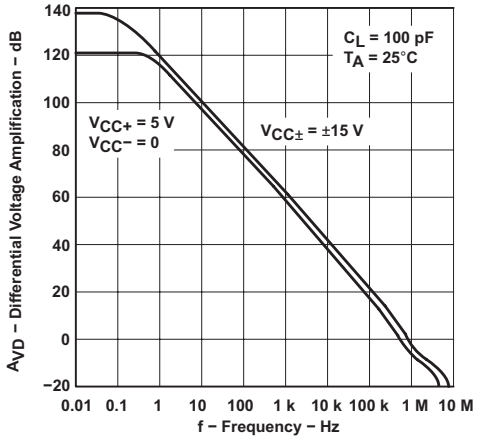

Figure 10. Differential Voltage Amplification vs Frequency

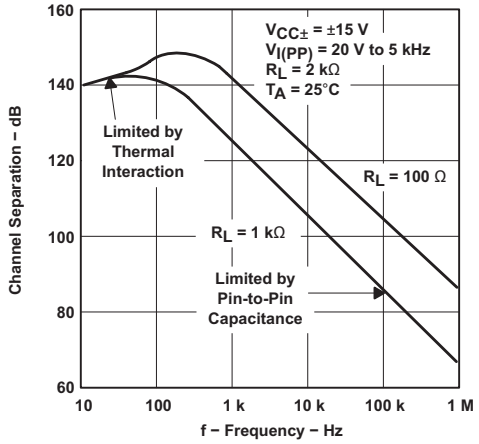

Figure 11. Channel Separation vs Frequency

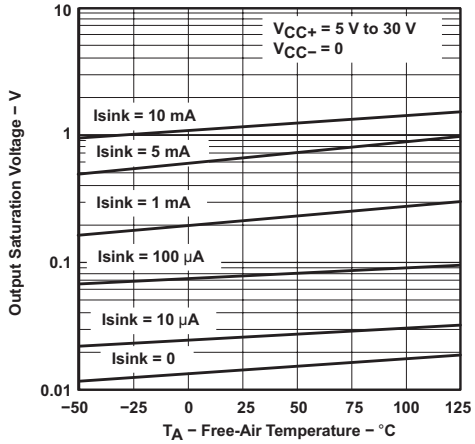

Figure 12. Output Saturation Voltage vs Free-Air Temperature

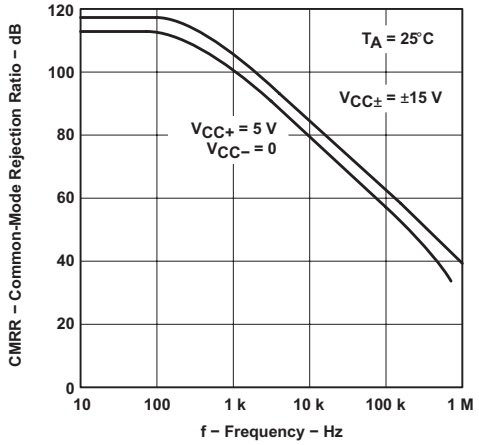

Figure 13. Common-Mode Rejection Ratio vs Frequency

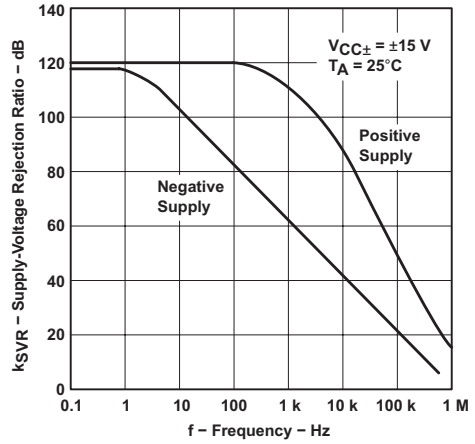

Figure 14. Supply-Voltage Rejection Ratio vs Frequency

Copyright © 1988–2016, Texas Instruments Incorporated

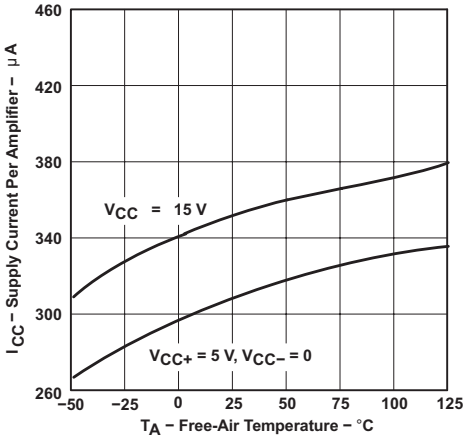

Figure 15. Supply Current vs Free-Air Temperature

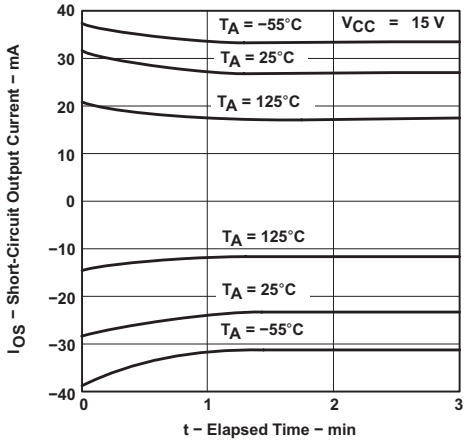

Figure 16. Short-Circuit Output Current vs Elapsed Time

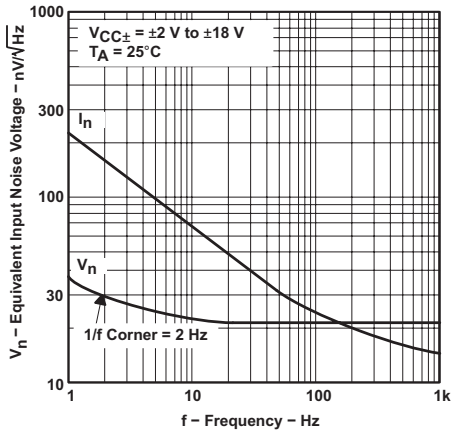

Figure 17. Equivalent Input Noise Voltage and Equivalent Input Noise Current vs Frequency

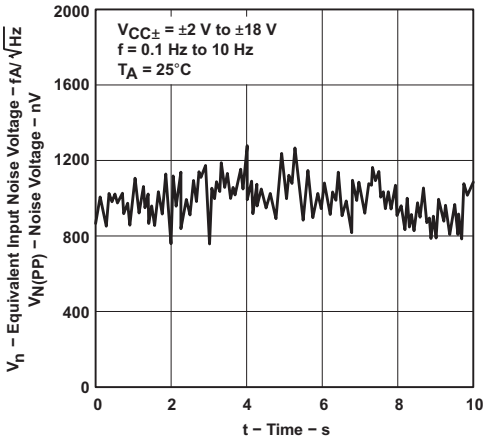

Figure 18. Peak-to-Peak Input Noise Voltage Over a 10-Second Period

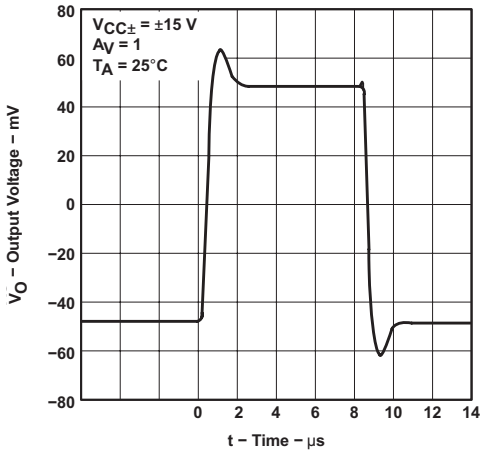

Figure 19. Voltage-Follower Small-Signal Pulse Response

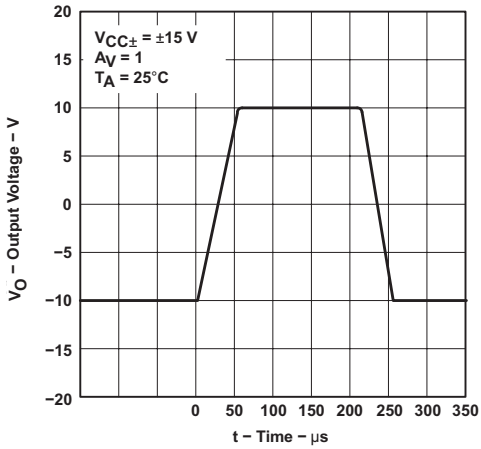

Figure 20. Voltage-Follower Large-Signal Pulse Response

Copyright © 1988–2016, Texas Instruments Incorporated

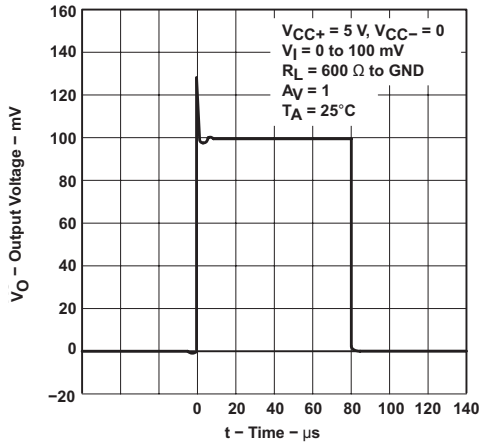

Figure 21. Voltage-Follower Small-Signal Pulse Response

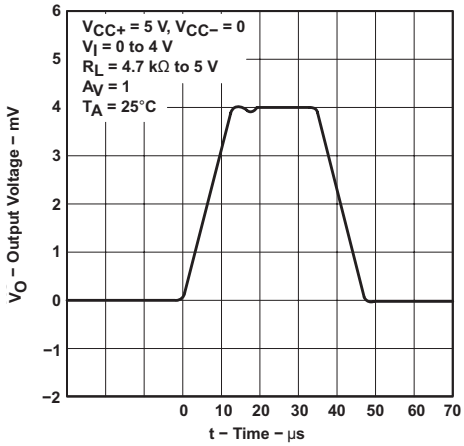

Figure 22. Voltage-Follower Large-Signal Pulse Response

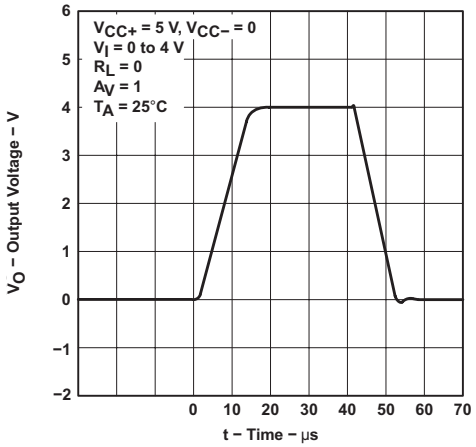

Figure 23. Voltage-Follower Large-Signal Pulse Response

Copyright © 1988–2016, Texas Instruments Incorporated

7 Detailed Description

7.1 Overview

The LT1013x device is a dual operational amplifier with low natural V_{IO} without programming memory that can be erased. There are no side effects from active V_{IO} correction used by other op amps. The LT1013x has built-in protection for input voltage below $V_{CC–}$. However, an external resistance must be add to protect the LT1013x from input voltage greater than V_{CC+}.

7.2 Functional Block Diagram

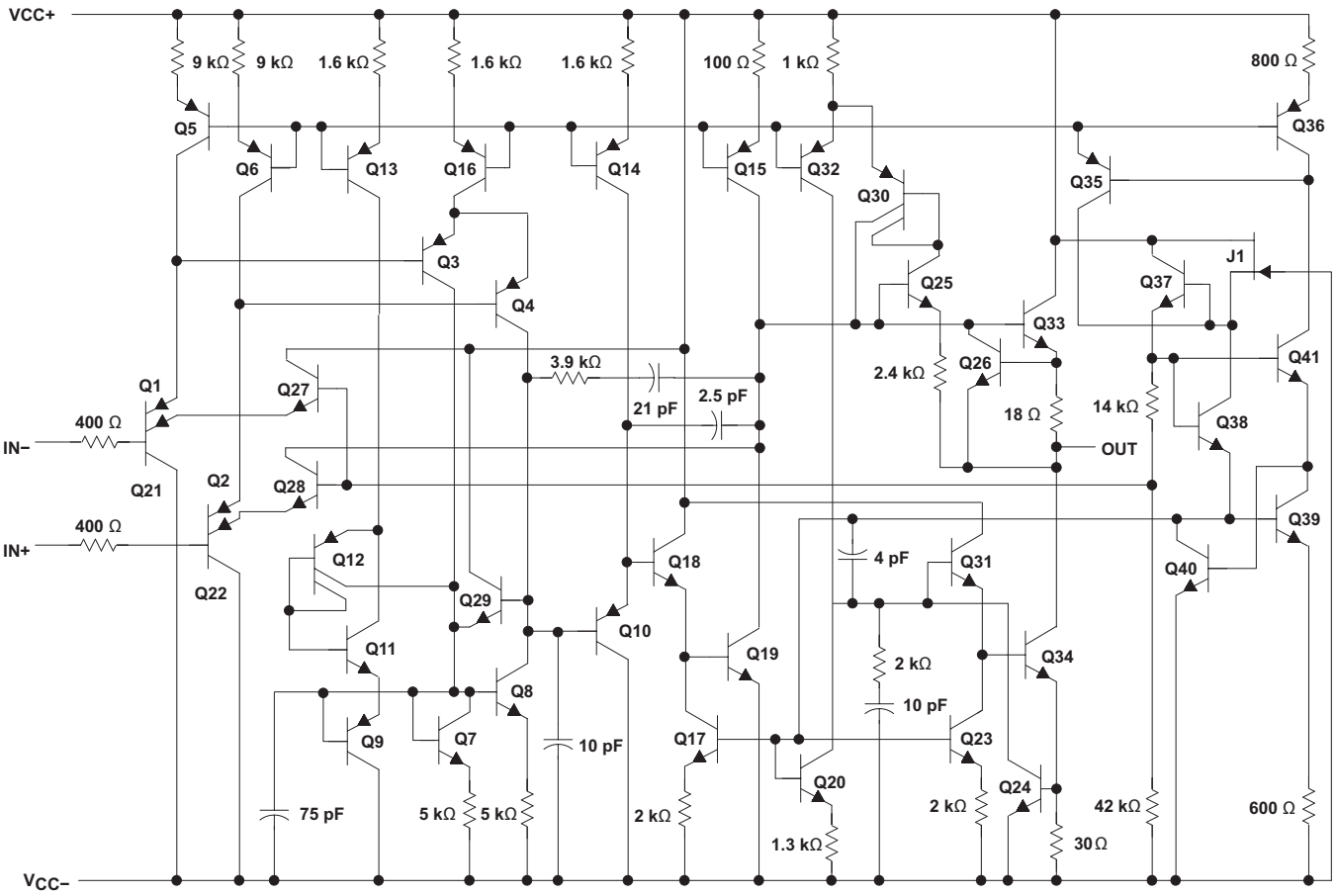

Component values are nominal.

Copyright © 2016, Texas Instruments Incorporated

7.3 Feature Description

7.3.1 Input Resistors

For voltages less than $V_{CC–}$, a pair of 400-Ω resistors limit input current. These resistors have parasitic diodes to VCC+. Therefore, external series resistance is needed if input voltage exceed V_{CC+}

7.3.2 Output Stage

High output is provided by Q33 emitter for low output impedance. Q26 provides active current limiting for sourcing current.

Low output is provided by Q34 collector for lower output voltage near $V_{CC–}$ rail. Q24 provides active current limiting for sinking current.

Feature Description (continued)

7.3.3 Low-Supply Operation

The minimum supply voltage for proper operation of the LT1013x is 3.4 V (three NiCad batteries). Typical supply current at this voltage is 290 µA; therefore, power dissipation is only 1 mW per amplifier.

7.3.4 Output Phase Reversal Protection

The LT1013x is fully specified for single-supply operation (V_{CC-} = 0). The common-mode input voltage range includes ground, and the output swings to within a few millivolts of ground.

Furthermore, the LT1013x has specific circuitry that addresses the difficulties of single-supply operation, both at the input and at the output. At the input, the driving signal can fall below 0 V, either inadvertently or on a transient basis. If the input is more than a few hundred millivolts below ground, the LT1013x is designed to deal with the following two problems that can occur:

1. On many other operational amplifiers, when the input is more than a diode drop below ground, unlimited current flows from the substrate (VCC− terminal) to the input, which can destroy the unit. On the LT1013x, the 400-Ω resistors in series with the input protect the device, even when the input is 5 V below ground.
2. When the input is more than 400 mV below ground (at T_A = 25°C), the input stage of similar operational amplifiers saturates, and phase reversal occurs at the output. This can cause lockup in servo systems. Because of unique phase-reversal protection circuitry (Q21, Q22, Q27, and Q28), the LT1013x outputs do not reverse, even when the inputs are at −1.5 V (see Figure 24).

This phase-reversal protection circuitry does not function when the other operational amplifier on the LT1013x is driven hard into negative saturation at the output. Phase-reversal protection does not work on amplifier 1 when amplifier 2 output is in negative saturation nor on amplifier 2 when amplifier 1 output is in negative saturation.

At the output, other single-supply designs either cannot swing to within 600 mV of ground or cannot sink more than a few micro amperes while swinging to ground. The all-npn output stage of the LT1013x maintains its low output resistance and high-gain characteristics until the output is saturated. In dual-supply operations, the output stage is free of crossover distortion.

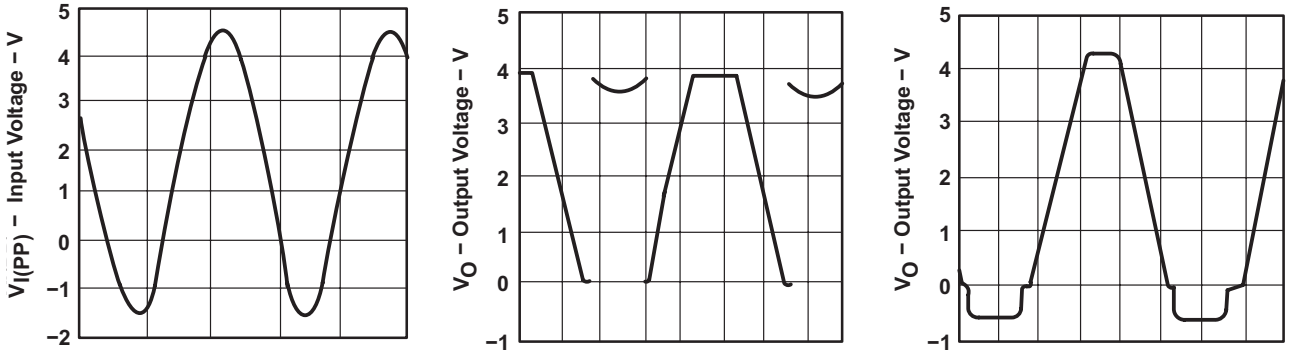

Figure 24. Voltage-Follower Response With Input Exceeding the Negative Common-Mode Input Voltage Range

Copyright © 1988–2016, Texas Instruments Incorporated

Feature Description (continued)

7.3.4.1 Comparator Applications

The single-supply operation of the LT1013x is well suited for use as a precision comparator with TTL-compatible output. In systems using both operational amplifiers and comparators, the LT1013x can perform multiple duties (see Figure 25 and Figure 26).

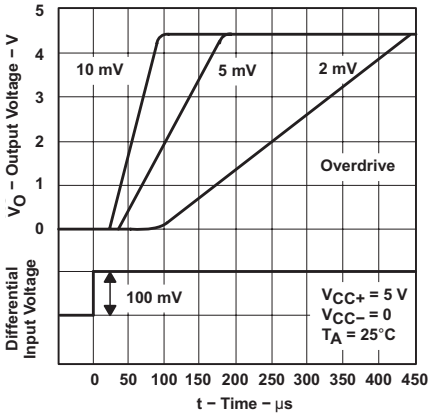

Figure 25. Low-to-High-Level Output Response for Various Input Overdrives

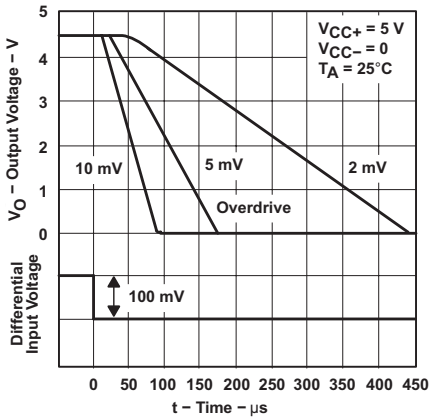

Figure 26. High-to-Low-Level Output Response for Various Input Overdrives

7.4 Device Functional Modes

The LT1013x dual operational amplifier amplifies a differential voltage applied to the inputs.

Copyright © 1988–2016, Texas Instruments Incorporated

8 Application and Implementation

NOTE

Information in the following applications sections is not part of the TI component specification, and TI does not warrant its accuracy or completeness. TI's customers are responsible for determining suitability of components for their purposes. Customers should validate and test their design implementation to confirm system functionality.

8.1 Application Information

The LT1013x operational amplifiers are useful in a wide range of signal conditioning applications where high DC accuracy is needed.

8.2 Typical Application

A typical application for an operational amplifier in an inverting amplifier. This amplifier takes a positive voltage on the input and makes it a negative voltage of the same magnitude. In the same manner, it also makes negative voltages positive.

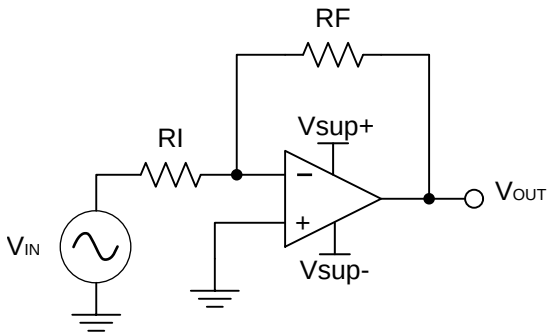

Copyright © 2016, Texas Instruments Incorporated

Figure 27. Application Schematic

8.2.1 Design Requirements

The supply voltage must be chosen such that it is larger than the input voltage range and output range. For instance, this application scales a signal of ±0.5 V to ±1.8 V. Setting the supply at ±12 V is sufficient to accommodate this application.

8.2.2 Detailed Design Procedure

Determine the gain required by the inverting amplifier using Equation 1 and Equation 2:

$$A_v = \frac{VOUT}{VIN} \tag{1}$$

$$A_v = \frac{1.8}{-0.5} = -3.6 \tag{2}$$

Once the desired gain is determined, choose a value for RI or RF. Choosing a value in the kΩ range is desirable because the amplifier circuit will use currents in the milliamp range. This ensures the part does not draw too much current. This example chooses 10 kΩ for RI, which means 36 kΩ is used for RF. This was determined by Equation 3.

$$A_v = -\frac{RF}{RI} \tag{3}$$

Copyright © 1988–2016, Texas Instruments Incorporated

Typical Application (continued)

8.2.3 Application Curve

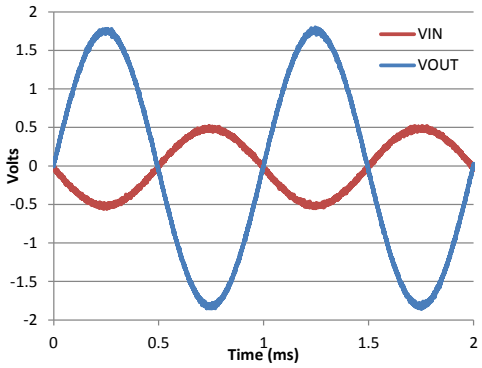

Figure 28. Input and Output Voltages of the Inverting Amplifier

9 Power Supply Recommendations

CAUTION

Supply voltages larger than 44 V for a single supply, or outside the range of ±22 V for a dual supply can permanently damage the device (see *Absolute Maximum Ratings*).

Place 0.1-µF bypass capacitors close to the power-supply pins to reduce errors coupling in from noisy or high impedance power supplies. For more detailed information on bypass capacitor placement, see *Layout*.

10 Layout

10.1 Layout Guidelines

For best operational performance of the device, use quality PCB layout practices, including:

- Noise can propagate into analog circuitry through the power pins of the circuit as a whole, as well as the operational amplifier. Bypass capacitors are used to reduce the coupled noise by providing low impedance power sources local to the analog circuitry.
  - Connect low-ESR, 0.1-µF ceramic bypass capacitors between each supply pin and ground, placed as close to the device as possible. A single bypass capacitor from V+ to ground is applicable for single-supply applications.
- Separate grounding for analog and digital portions of circuitry is one of the simplest and most effective methods of noise suppression. One or more layers on multilayer PCBs are usually devoted to ground planes. A ground plane helps distribute heat and reduces EMI noise pickup. Make sure to physically separate digital and analog grounds, paying attention to the flow of the ground current.
- Run the input traces as far away from the supply or output traces as possible to reduce parasitic coupling. If it is not possible to keep them separate, it is much better to cross the sensitive trace perpendicular as opposed to in parallel with the noisy trace.
- Place the external components as close to the device as possible. Keeping RF and RG close to the inverting input minimizes parasitic capacitance, as shown in *Layout Guidelines*.
- Keep the length of input traces as short as possible. Always remember that the input traces are the most sensitive part of the circuit.
- Consider a driven, low-impedance guard ring around the critical traces. A guard ring can significantly reduce leakage currents from nearby traces that are at different potentials.

Copyright © 1988–2016, Texas Instruments Incorporated

10.2 Layout Examples

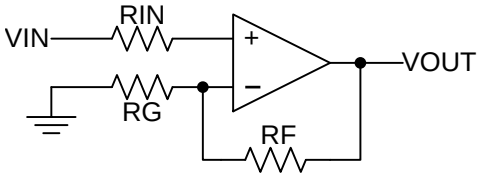

Figure 29. Operational Amplifier Schematic for Noninverting Configuration

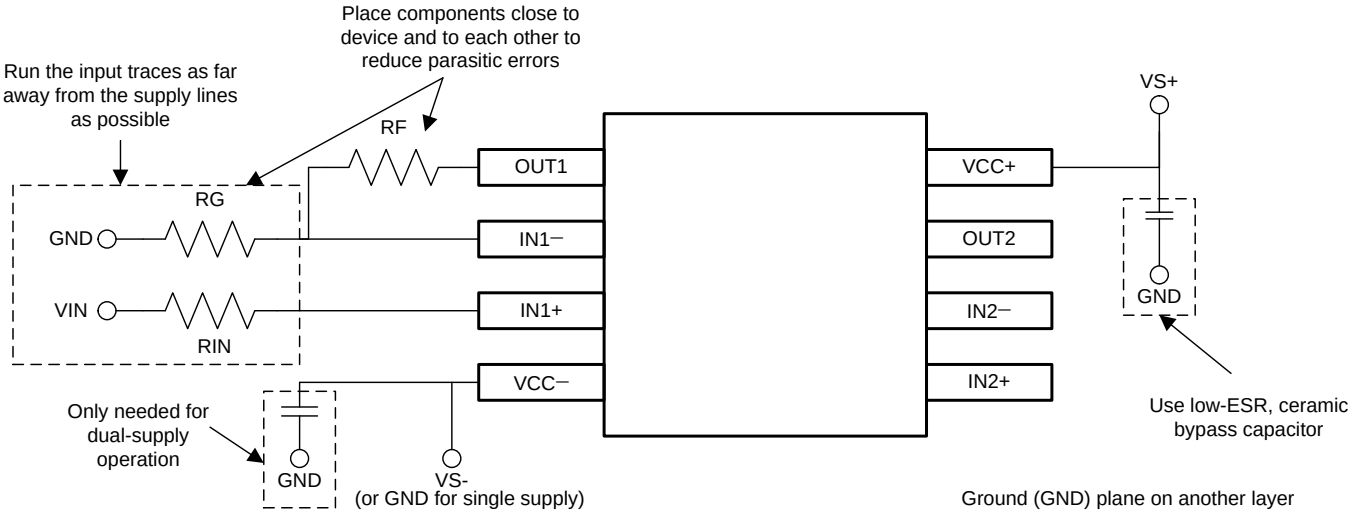

Figure 30. Operational Amplifier Board Layout for Noninverting Configuration

Copyright © 1988–2016, Texas Instruments Incorporated

11 Device and Documentation Support

11.1 Device Support

11.1.1 Developmental Support

For developmental support, see the following:

LT1013-DIE

11.2 Related Links

The table below lists quick access links. Categories include technical documents, support and community resources, tools and software, and quick access to sample or buy.

Table 2. Related Links

PARTS	PRODUCT FOLDER	SAMPLE & BUY	TECHNICAL DOCUMENTS	TOOLS & SOFTWARE	SUPPORT & COMMUNITY
LT1013	Click here	Click here	Click here	Click here	Click here
LT1013D	Click here	Click here	Click here	Click here	Click here
LT1013M	Click here	Click here	Click here	Click here	Click here
LT1013AM	Click here	Click here	Click here	Click here	Click here
LT1013-DIE	Click here	Click here	Click here	Click here	Click here

11.3 Receiving Notification of Documentation Updates

To receive notification of documentation updates, navigate to the device product folder on ti.com. In the upper right corner, click on *Alert me* to register and receive a weekly digest of any product information that has changed. For change details, review the revision history included in any revised document.

11.4 Community Resources

The following links connect to TI community resources. Linked contents are provided "AS IS" by the respective contributors. They do not constitute TI specifications and do not necessarily reflect TI's views; see TI's Terms of Use.

TI E2E™ Online Community ***TI's Engineer-to-Engineer (E2E) Community.*** Created to foster collaboration among engineers. At e2e.ti.com, you can ask questions, share knowledge, explore ideas and help solve problems with fellow engineers.

Design Support ***TI's Design Support*** Quickly find helpful E2E forums along with design support tools and contact information for technical support.

11.5 Trademarks

E2E is a trademark of Texas Instruments.
All other trademarks are the property of their respective owners.

11.6 Electrostatic Discharge Caution

This integrated circuit can be damaged by ESD. Texas Instruments recommends that all integrated circuits be handled with appropriate precautions. Failure to observe proper handling and installation procedures can cause damage.

ESD damage can range from subtle performance degradation to complete device failure. Precision integrated circuits may be more susceptible to damage because very small parametric changes could cause the device not to meet its published specifications.

11.7 Glossary

SLYZ022 — *TI Glossary*.

This glossary lists and explains terms, acronyms, and definitions.

Copyright © 1988–2016, Texas Instruments Incorporated

12 Mechanical, Packaging, and Orderable Information

The following pages include mechanical, packaging, and orderable information. This information is the most current data available for the designated devices. This data is subject to change without notice and revision of this document. For browser-based versions of this data sheet, refer to the left-hand navigation.

Copyright © 1988–2016, Texas Instruments Incorporated

PACKAGING INFORMATION

Orderable Device	Status (1)	Package Type	Package Drawing	Pins	Package Qty	Eco Plan (2)	Lead finish/ Ball material (6)	MSL Peak Temp (3)	Op Temp (°C)	Device Marking (4/5)	Samples
5962-88760012A	ACTIVE	LCCC	FK	20	1	Non-RoHS & Green	SNPB	N / A for Pkg Type	-55 to 125	5962-88760012A LT1013AMFKB	Samples
5962-8876001PA	ACTIVE	CDIP	JG	8	1	Non-RoHS & Green	SNPB	N / A for Pkg Type	-55 to 125	8876001PA LT1013AM	Samples
5962-88760022A	ACTIVE	LCCC	FK	20	1	Non-RoHS & Green	SNPB	N / A for Pkg Type	-55 to 125	5962-88760022A LT1013MFKB	Samples
5962-8876002PA	ACTIVE	CDIP	JG	8	1	Non-RoHS & Green	SNPB	N / A for Pkg Type	-55 to 125	8876002PA LT1013M	Samples
LT1013AMFKB	ACTIVE	LCCC	FK	20	1	Non-RoHS & Green	SNPB	N / A for Pkg Type	-55 to 125	5962-88760012A LT1013AMFKB	Samples
LT1013AMJG	ACTIVE	CDIP	JG	8	1	Non-RoHS & Green	SNPB	N / A for Pkg Type	-55 to 125	LT1013AMJG	Samples
LT1013AMJGB	ACTIVE	CDIP	JG	8	1	Non-RoHS & Green	SNPB	N / A for Pkg Type	-55 to 125	8876001PA LT1013AM	Samples
LT1013CD	ACTIVE	SOIC	D	8	75	RoHS & Green	NIPDAU	Level-1-260C-UNLIM	0 to 70	1013C	Samples
LT1013CDR	ACTIVE	SOIC	D	8	2500	RoHS & Green	NIPDAU	Level-1-260C-UNLIM	0 to 70	1013C	Samples
LT1013CDRE4	ACTIVE	SOIC	D	8	2500	RoHS & Green	NIPDAU	Level-1-260C-UNLIM	0 to 70	1013C	Samples
LT1013CP	ACTIVE	PDIP	P	8	50	RoHS & Green	NIPDAU	N / A for Pkg Type	0 to 70	LT1013CP	Samples
LT1013CPE4	ACTIVE	PDIP	P	8	50	RoHS & Green	NIPDAU	N / A for Pkg Type	0 to 70	LT1013CP	Samples
LT1013DD	ACTIVE	SOIC	D	8	75	RoHS & Green	NIPDAU	Level-1-260C-UNLIM	0 to 70	1013D	Samples
LT1013DDE4	ACTIVE	SOIC	D	8	75	RoHS & Green	NIPDAU	Level-1-260C-UNLIM	0 to 70	1013D	Samples
LT1013DDG4	ACTIVE	SOIC	D	8	75	RoHS & Green	NIPDAU	Level-1-260C-UNLIM	0 to 70	1013D	Samples
LT1013DDR	ACTIVE	SOIC	D	8	2500	RoHS & Green	NIPDAU	Level-1-260C-UNLIM	0 to 70	1013D	Samples
LT1013DDRE4	ACTIVE	SOIC	D	8	2500	RoHS & Green	NIPDAU	Level-1-260C-UNLIM	0 to 70	1013D	Samples

Orderable Device	Status (1)	Package Type	Package Drawing	Pins	Package Qty	Eco Plan (2)	Lead finish/ Ball material (6)	MSL Peak Temp (3)	Op Temp (°C)	Device Marking (4/5)	Samples
LT1013DID	ACTIVE	SOIC	D	8	75	RoHS & Green	NIPDAU	Level-1-260C-UNLIM	-40 to 105	1013DI	Samples
LT1013DIDG4	ACTIVE	SOIC	D	8	75	RoHS & Green	NIPDAU	Level-1-260C-UNLIM	-40 to 105	1013DI	Samples
LT1013DIDR	ACTIVE	SOIC	D	8	2500	RoHS & Green	NIPDAU	Level-1-260C-UNLIM	-40 to 105	1013DI	Samples
LT1013DIDRE4	ACTIVE	SOIC	D	8	2500	RoHS & Green	NIPDAU	Level-1-260C-UNLIM	-40 to 105	1013DI	Samples
LT1013DIP	ACTIVE	PDIP	P	8	50	RoHS & Green	NIPDAU	N / A for Pkg Type	-40 to 105	LT1013DIP	Samples
LT1013DIPE4	ACTIVE	PDIP	P	8	50	RoHS & Green	NIPDAU	N / A for Pkg Type	-40 to 105	LT1013DIP	Samples
LT1013DMD	ACTIVE	SOIC	D	8	75	RoHS & Green	NIPDAU	Level-1-260C-UNLIM	-55 to 125	1013DM	Samples
LT1013DMDG4	ACTIVE	SOIC	D	8	75	RoHS & Green	NIPDAU	Level-1-260C-UNLIM	-55 to 125	1013DM	Samples
LT1013DP	ACTIVE	PDIP	P	8	50	RoHS & Green	NIPDAU	N / A for Pkg Type	0 to 70	LT1013DP	Samples
LT1013MFKB	ACTIVE	LCCC	FK	20	1	Non-RoHS & Green	SNPB	N / A for Pkg Type	-55 to 125	5962-88760022A LT1013MFKB	Samples
LT1013MJG	ACTIVE	CDIP	JG	8	1	Non-RoHS & Green	SNPB	N / A for Pkg Type	-55 to 125	LT1013MJG	Samples
LT1013MJGB	ACTIVE	CDIP	JG	8	1	Non-RoHS & Green	SNPB	N / A for Pkg Type	-55 to 125	8876002PA LT1013M	Samples

(1) The marketing status values are defined as follows:
ACTIVE: Product device recommended for new designs.
LIFEBUY: TI has announced that the device will be discontinued, and a lifetime-buy period is in effect.
NRND: Not recommended for new designs. Device is in production to support existing customers, but TI does not recommend using this part in a new design.
PREVIEW: Device has been announced but is not in production. Samples may or may not be available.
OBSOLETE: TI has discontinued the production of the device.

(2) **RoHS:** TI defines "RoHS" to mean semiconductor products that are compliant with the current EU RoHS requirements for all 10 RoHS substances, including the requirement that RoHS substance do not exceed 0.1% by weight in homogeneous materials. Where designed to be soldered at high temperatures, "RoHS" products are suitable for use in specified lead-free processes. TI may reference these types of products as "Pb-Free".
RoHS Exempt: TI defines "RoHS Exempt" to mean products that contain lead but are compliant with EU RoHS pursuant to a specific EU RoHS exemption.
Green: TI defines "Green" to mean the content of Chlorine (Cl) and Bromine (Br) based flame retardants meet JS709B low halogen requirements of <=1000ppm threshold. Antimony trioxide based flame retardants must also meet the <=1000ppm threshold requirement.

(3) MSL, Peak Temp. - The Moisture Sensitivity Level rating according to the JEDEC industry standard classifications, and peak solder temperature.

(4) There may be additional marking, which relates to the logo, the lot trace code information, or the environmental category on the device.

(5) Multiple Device Markings will be inside parentheses. Only one Device Marking contained in parentheses and separated by a "~" will appear on a device. If a line is indented then it is a continuation of the previous line and the two combined represent the entire Device Marking for that device.

(6) Lead finish/Ball material - Orderable Devices may have multiple material finish options. Finish options are separated by a vertical ruled line. Lead finish/Ball material values may wrap to two lines if the finish value exceeds the maximum column width.

Important Information and Disclaimer: The information provided on this page represents TI's knowledge and belief as of the date that it is provided. TI bases its knowledge and belief on information provided by third parties, and makes no representation or warranty as to the accuracy of such information. Efforts are underway to better integrate information from third parties. TI has taken and continues to take reasonable steps to provide representative and accurate information but may not have conducted destructive testing or chemical analysis on incoming materials and chemicals. TI and TI suppliers consider certain information to be proprietary, and thus CAS numbers and other limited information may not be available for release.

In no event shall TI's liability arising out of such information exceed the total purchase price of the TI part(s) at issue in this document sold by TI to Customer on an annual basis.

OTHER QUALIFIED VERSIONS OF LT1013, LT1013M :

- Catalog : LT1013
- Military : LT1013M

NOTE: Qualified Version Definitions:

- Catalog - TI's standard catalog product
- Military - QML certified for Military and Defense Applications

TAPE AND REEL INFORMATION

REEL DIMENSIONS

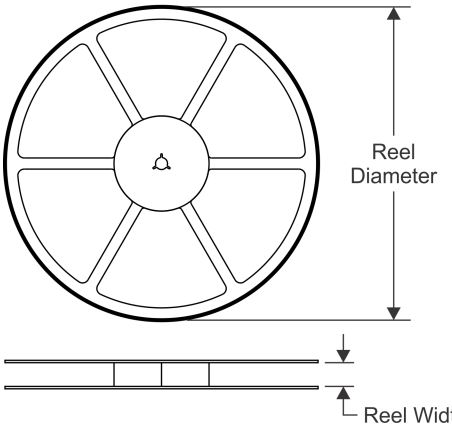

TAPE DIMENSIONS

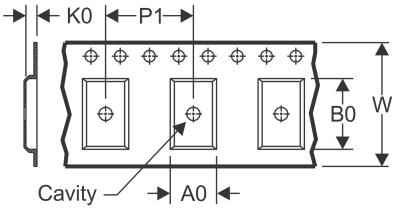

A0	Dimension designed to accommodate the component width
B0	Dimension designed to accommodate the component length
K0	Dimension designed to accommodate the component thickness
W	Overall width of the carrier tape
P1	Pitch between successive cavity centers

QUADRANT ASSIGNMENTS FOR PIN 1 ORIENTATION IN TAPE

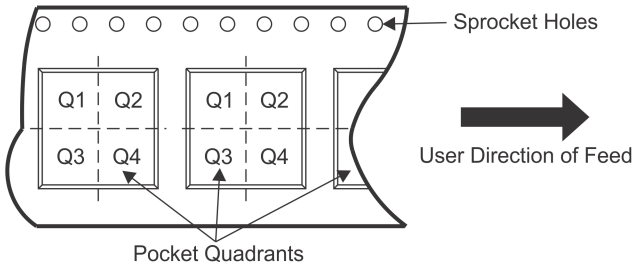

*All dimensions are nominal

Device	Package Type	Package Drawing	Pins	SPQ	Reel Diameter (mm)	Reel Width W1 (mm)	A0 (mm)	B0 (mm)	K0 (mm)	P1 (mm)	W (mm)	Pin1 Quadrant
LT1013CDR	SOIC	D	8	2500	330.0	12.4	6.4	5.2	2.1	8.0	12.0	Q1
LT1013DDR	SOIC	D	8	2500	330.0	12.4	6.4	5.2	2.1	8.0	12.0	Q1
LT1013DIDR	SOIC	D	8	2500	330.0	12.4	6.4	5.2	2.1	8.0	12.0	Q1

TAPE AND REEL BOX DIMENSIONS

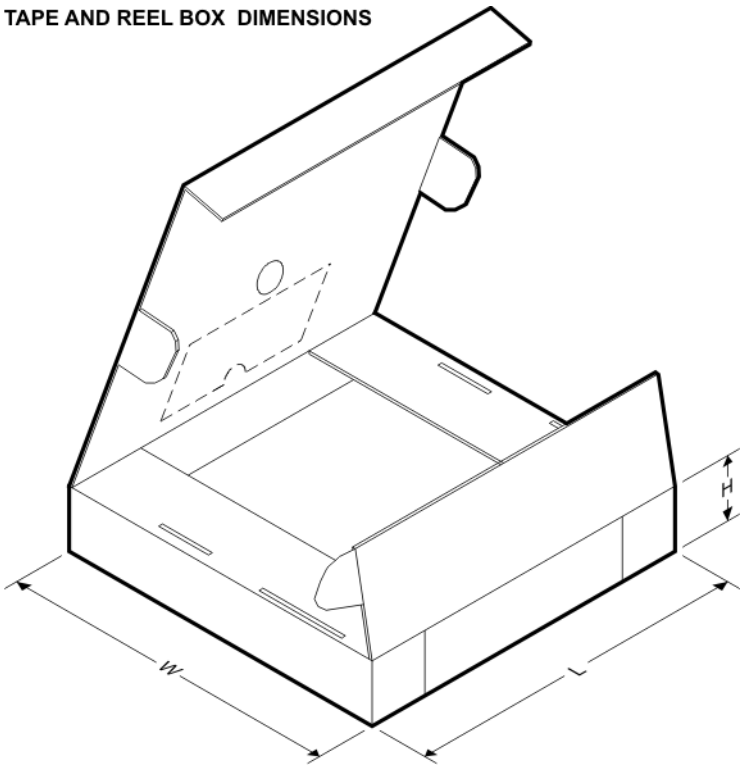

*All dimensions are nominal

Device	Package Type	Package Drawing	Pins	SPQ	Length (mm)	Width (mm)	Height (mm)
LT1013CDR	SOIC	D	8	2500	340.5	336.1	25.0
LT1013DDR	SOIC	D	8	2500	340.5	336.1	25.0
LT1013DIDR	SOIC	D	8	2500	340.5	336.1	25.0

TUBE

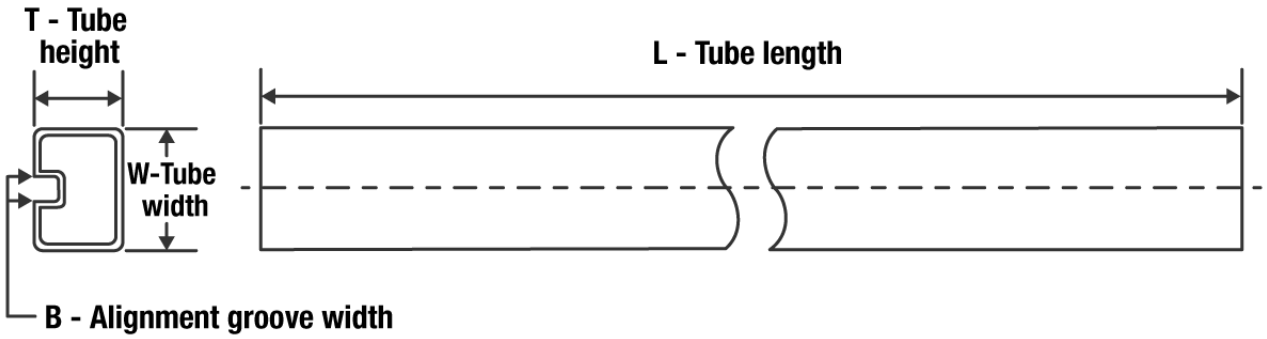

*All dimensions are nominal

Device	Package Name	Package Type	Pins	SPQ	L (mm)	W (mm)	T (µm)	B (mm)
5962-88760012A	FK	LCCC	20	1	506.98	12.06	2030	NA
5962-88760022A	FK	LCCC	20	1	506.98	12.06	2030	NA
LT1013AMFKB	FK	LCCC	20	1	506.98	12.06	2030	NA
LT1013CD	D	SOIC	8	75	507	8	3940	4.32
LT1013CP	P	PDIP	8	50	506	13.97	11230	4.32
LT1013CPE4	P	PDIP	8	50	506	13.97	11230	4.32
LT1013DD	D	SOIC	8	75	507	8	3940	4.32
LT1013DDE4	D	SOIC	8	75	507	8	3940	4.32
LT1013DDG4	D	SOIC	8	75	507	8	3940	4.32
LT1013DID	D	SOIC	8	75	507	8	3940	4.32
LT1013DIDG4	D	SOIC	8	75	507	8	3940	4.32
LT1013DIP	P	PDIP	8	50	506	13.97	11230	4.32
LT1013DIPE4	P	PDIP	8	50	506	13.97	11230	4.32
LT1013DMD	D	SOIC	8	75	505.46	6.76	3810	4
LT1013DMDG4	D	SOIC	8	75	505.46	6.76	3810	4
LT1013DP	P	PDIP	8	50	506	13.97	11230	4.32
LT1013MFKB	FK	LCCC	20	1	506.98	12.06	2030	NA

FK (S–CQCC–N**) LEADLESS CERAMIC CHIP CARRIER

28 TERMINAL SHOWN

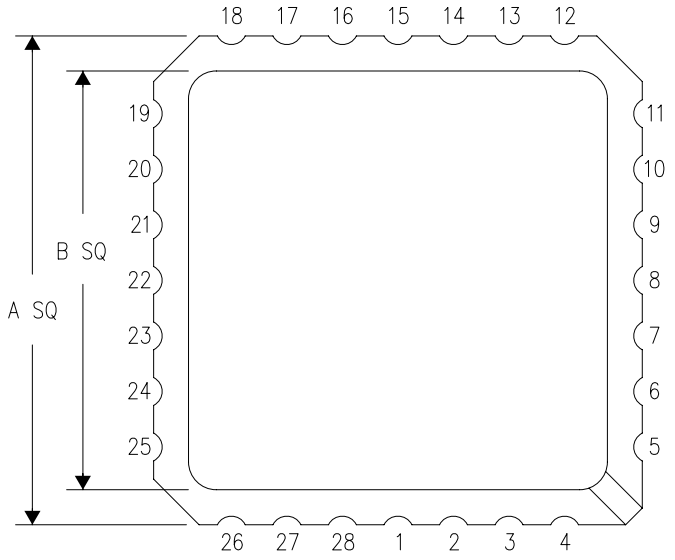

NO. OF TERMINALS **	A		B	
	MIN	MAX	MIN	MAX
20	0.342 (8,69)	0.358 (9,09)	0.307 (7,80)	0.358 (9,09)
28	0.442 (11,23)	0.458 (11,63)	0.406 (10,31)	0.458 (11,63)
44	0.640 (16,26)	0.660 (16,76)	0.495 (12,58)	0.560 (14,22)
52	0.740 (18,78)	0.761 (19,32)	0.495 (12,58)	0.560 (14,22)
68	0.938 (23,83)	0.962 (24,43)	0.850 (21,6)	0.858 (21,8)
84	1.141 (28,99)	1.165 (29,59)	1.047 (26,6)	1.063 (27,0)

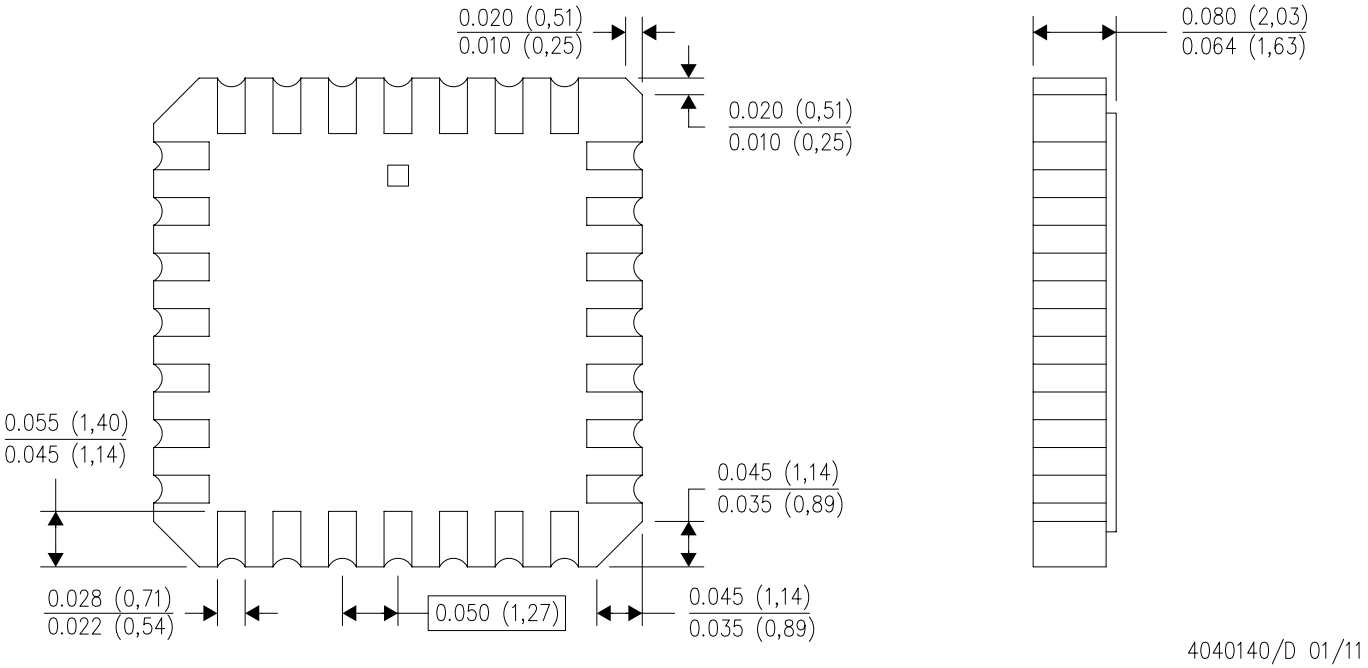

4040140/D 01/11

NOTES:
A. All linear dimensions are in inches (millimeters).
B. This drawing is subject to change without notice.
C. This package can be hermetically sealed with a metal lid.
D. Falls within JEDEC MS–004

MCER001A – JANUARY 1995 – REVISED JANUARY 1997

JG (R-GDIP-T8) **CERAMIC DUAL-IN-LINE**

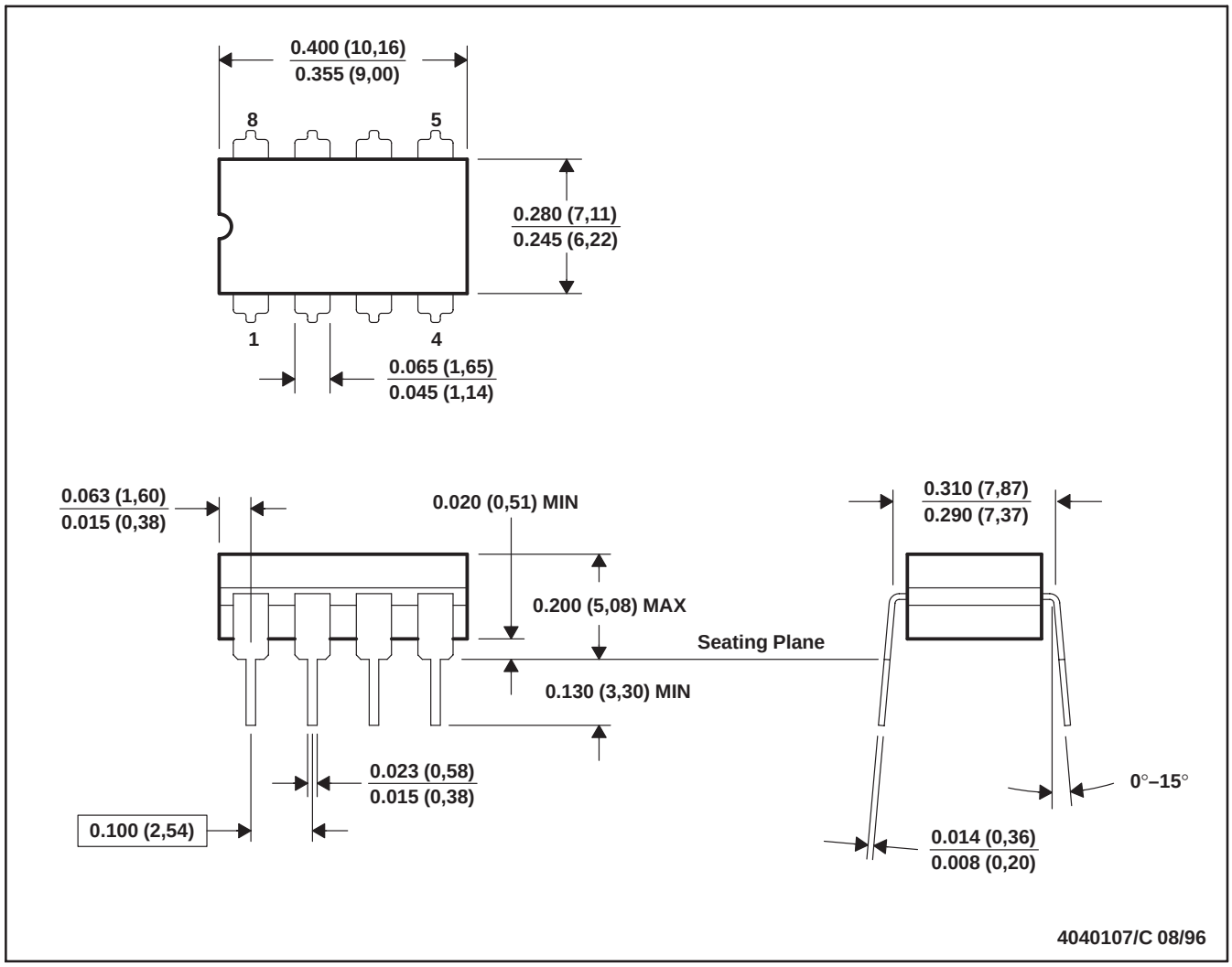

NOTES: A. All linear dimensions are in inches (millimeters).
B. This drawing is subject to change without notice.
C. This package can be hermetically sealed with a ceramic lid using glass frit.
D. Index point is provided on cap for terminal identification.
E. Falls within MIL STD 1835 GDIP1-T8

P (R–PDIP–T8) PLASTIC DUAL–IN–LINE PACKAGE

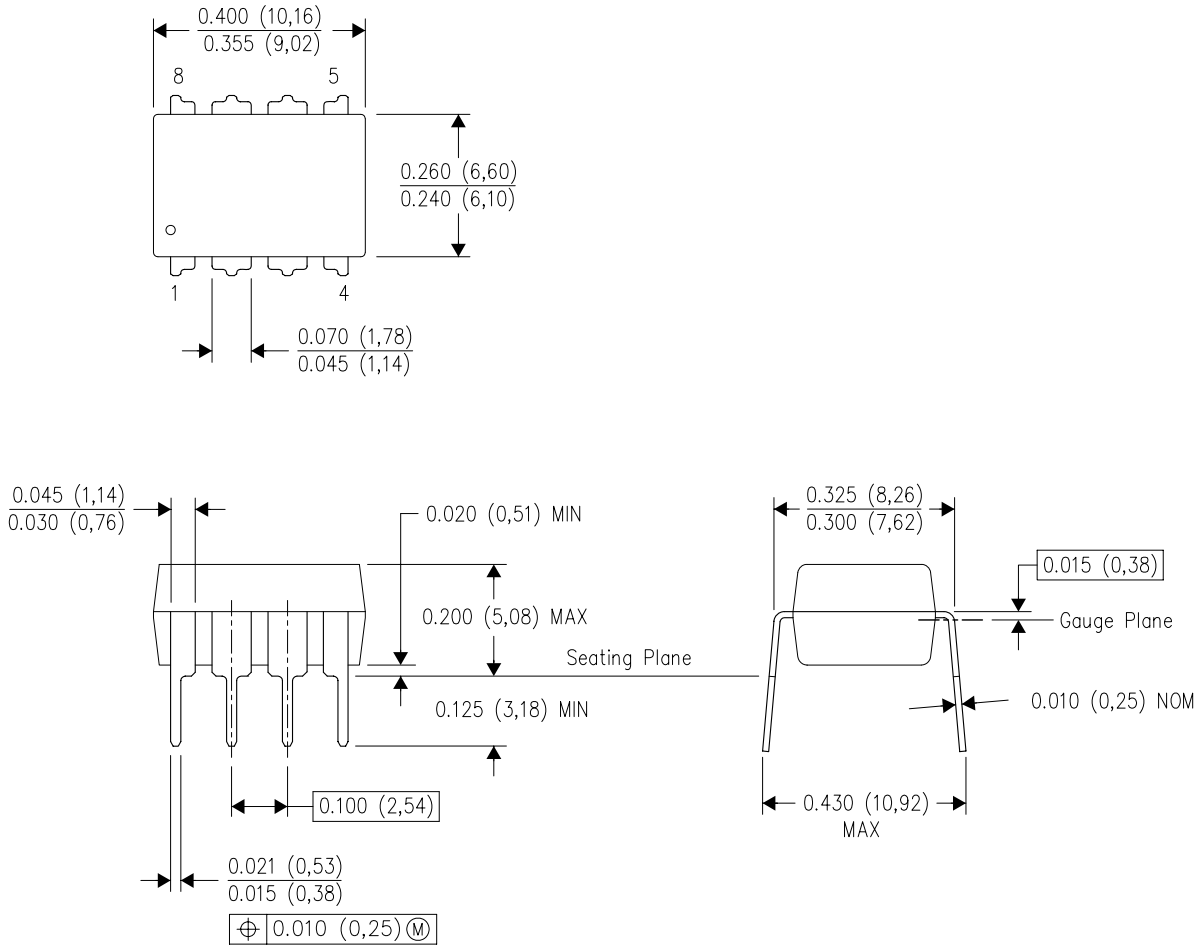

NOTES:
A. All linear dimensions are in inches (millimeters).
B. This drawing is subject to change without notice.
C. Falls within JEDEC MS–001 variation BA.

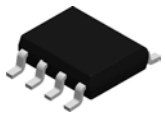

PACKAGE OUTLINE

D0008A

SOIC - 1.75 mm max height

SMALL OUTLINE INTEGRATED CIRCUIT

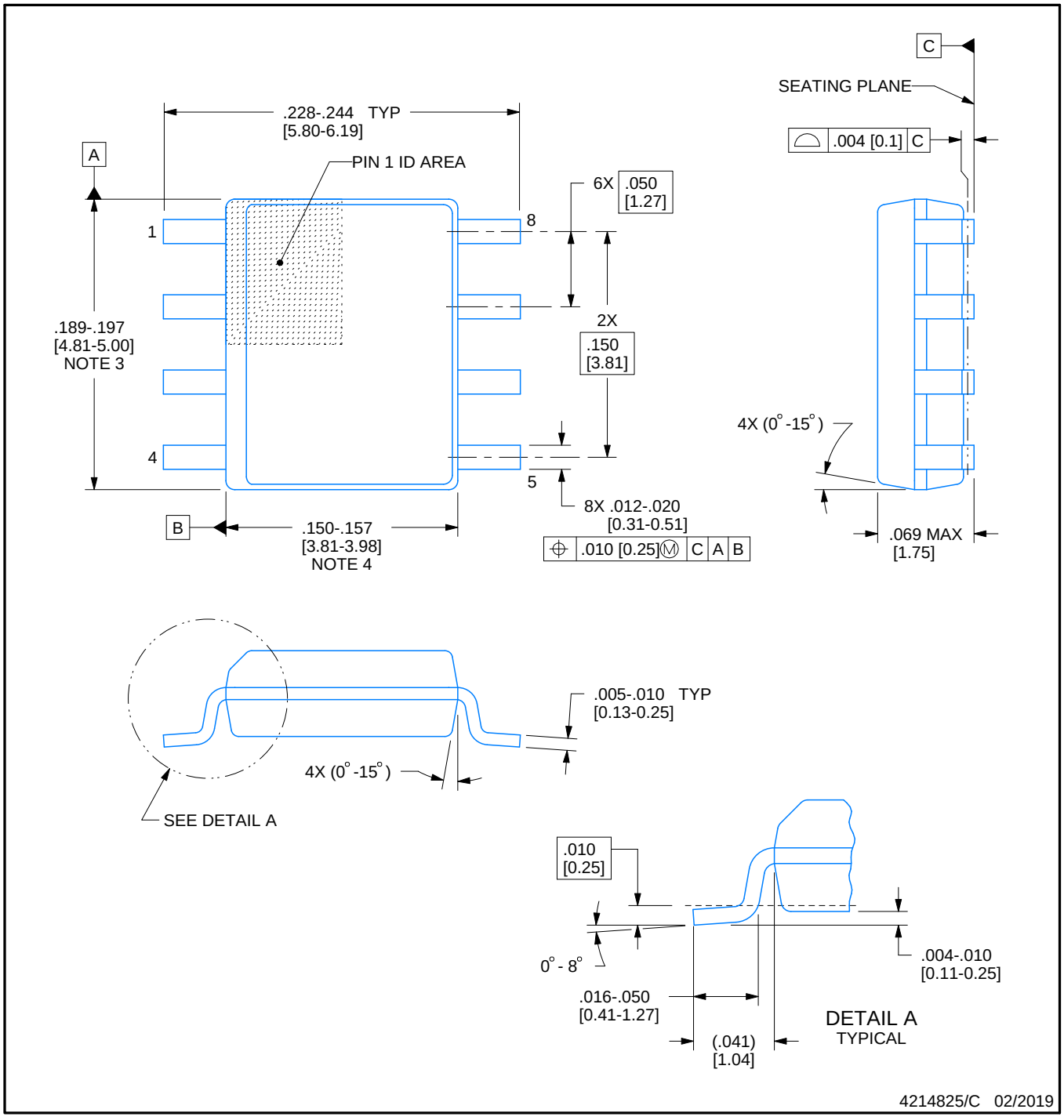

NOTES:

1. Linear dimensions are in inches [millimeters]. Dimensions in parenthesis are for reference only. Controlling dimensions are in inches. Dimensioning and tolerancing per ASME Y14.5M.
2. This drawing is subject to change without notice.
3. This dimension does not include mold flash, protrusions, or gate burrs. Mold flash, protrusions, or gate burrs shall not exceed .006 [0.15] per side.
4. This dimension does not include interlead flash.
5. Reference JEDEC registration MS-012, variation AA.

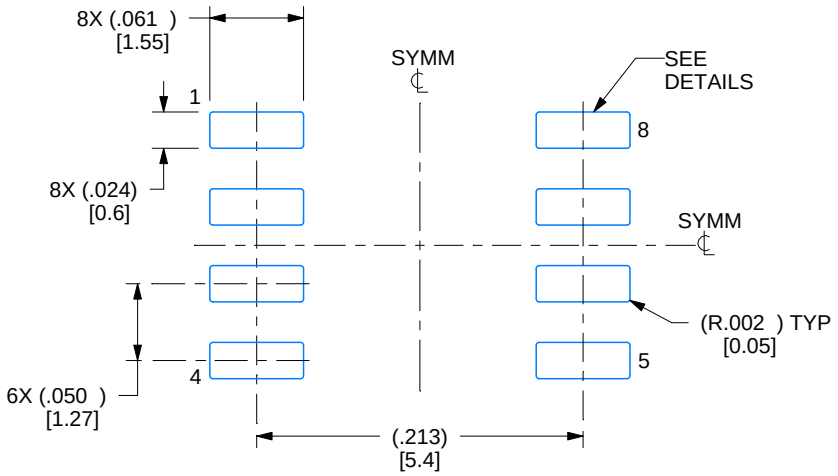

LAND PATTERN EXAMPLE
EXPOSED METAL SHOWN
SCALE:8X

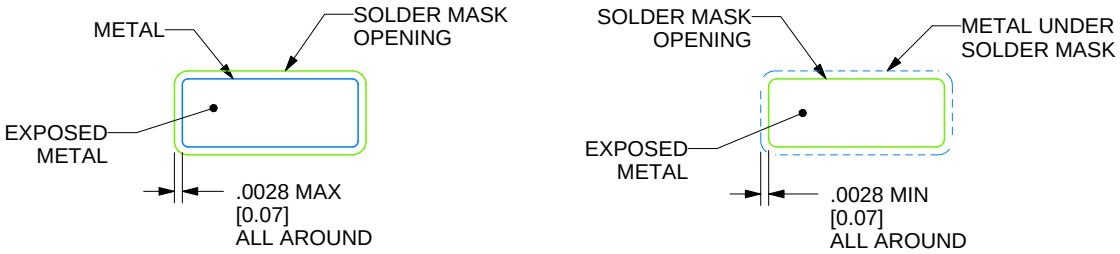

SOLDER MASK DETAILS

4214825/C 02/2019

NOTES: (continued)

6. Publication IPC-7351 may have alternate designs.
7. Solder mask tolerances between and around signal pads can vary based on board fabrication site.

EXAMPLE STENCIL DESIGN

D0008A

SOIC - 1.75 mm max height

SMALL OUTLINE INTEGRATED CIRCUIT

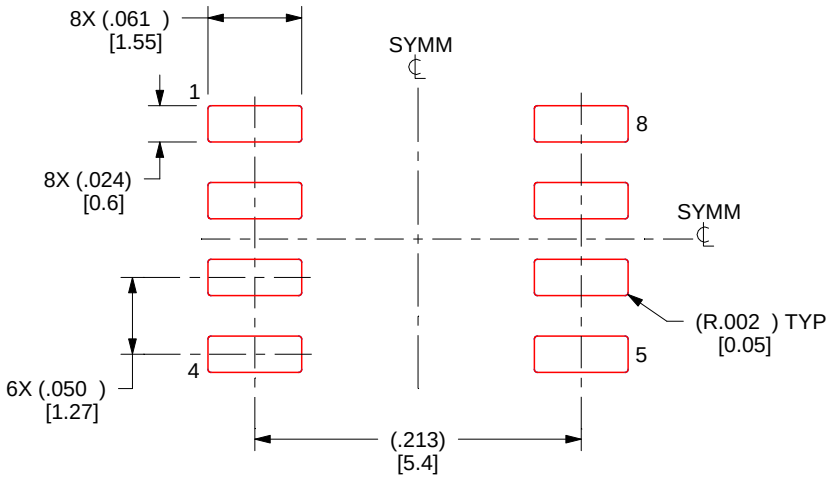

SOLDER PASTE EXAMPLE
BASED ON .005 INCH [0.125 MM] THICK STENCIL
SCALE:8X

4214825/C 02/2019

NOTES: (continued)

8. Laser cutting apertures with trapezoidal walls and rounded corners may offer better paste release. IPC-7525 may have alternate design recommendations.
9. Board assembly site may have different recommendations for stencil design.

IMPORTANT NOTICE AND DISCLAIMER

TI PROVIDES TECHNICAL AND RELIABILITY DATA (INCLUDING DATA SHEETS), DESIGN RESOURCES (INCLUDING REFERENCE DESIGNS), APPLICATION OR OTHER DESIGN ADVICE, WEB TOOLS, SAFETY INFORMATION, AND OTHER RESOURCES “AS IS” AND WITH ALL FAULTS, AND DISCLAIMS ALL WARRANTIES, EXPRESS AND IMPLIED, INCLUDING WITHOUT LIMITATION ANY IMPLIED WARRANTIES OF MERCHANTABILITY, FITNESS FOR A PARTICULAR PURPOSE OR NON-INFRINGEMENT OF THIRD PARTY INTELLECTUAL PROPERTY RIGHTS.

These resources are intended for skilled developers designing with TI products. You are solely responsible for (1) selecting the appropriate TI products for your application, (2) designing, validating and testing your application, and (3) ensuring your application meets applicable standards, and any other safety, security, regulatory or other requirements.

These resources are subject to change without notice. TI grants you permission to use these resources only for development of an application that uses the TI products described in the resource. Other reproduction and display of these resources is prohibited. No license is granted to any other TI intellectual property right or to any third party intellectual property right. TI disclaims responsibility for, and you will fully indemnify TI and its representatives against, any claims, damages, costs, losses, and liabilities arising out of your use of these resources.

TI’s products are provided subject to TI’s Terms of Sale or other applicable terms available either on ti.com or provided in conjunction with such TI products. TI’s provision of these resources does not expand or otherwise alter TI’s applicable warranties or warranty disclaimers for TI products.

TI objects to and rejects any additional or different terms you may have proposed.

Mailing Address: Texas Instruments, Post Office Box 655303, Dallas, Texas 75265
Copyright © 2022, Texas Instruments Incorporated