LP8752x-Q1 10-A Buck Converter With Integrated Switches

1 Features

- Qualified for Automotive Applications
- AEC-Q100 Qualified With the Following Results:
  - Device Temperature Grade 1: –40°C to +125°C Ambient Operating Temperature
  - Device HBM ESD Classification Level 2
  - Device CDM ESD Classification Level C4B
- Input Voltage: 2.8 V to 5.5 V
- Output Voltage: 0.6 V to 3.36 V
- Four High-Efficiency Step-Down DC/DC Converter Cores:
  - Maximum Output Current: 10 A
- Switching Frequency: 2 MHz
- Spread-Spectrum Mode and Phase Interleaving
- Configurable General Purpose I/O (GPIOs)
- I^2C-Compatible Interface That Supports Standard (100 kHz), Fast (400 kHz), Fast+ (1 MHz), and High-Speed (3.4 MHz) Modes
- Interrupt Function With Programmable Masking
- Programmable Power-Good Signal (PGOOD)
- Output Short-Circuit and Overload Protection
- Overtemperature Warning and Protection
- Overvoltage Protection (OVP) and Undervoltage Lockout (UVLO)

2 Applications

Automotive Infotainment, Cluster, Radar, and Camera Power Applications

Simplified Schematic

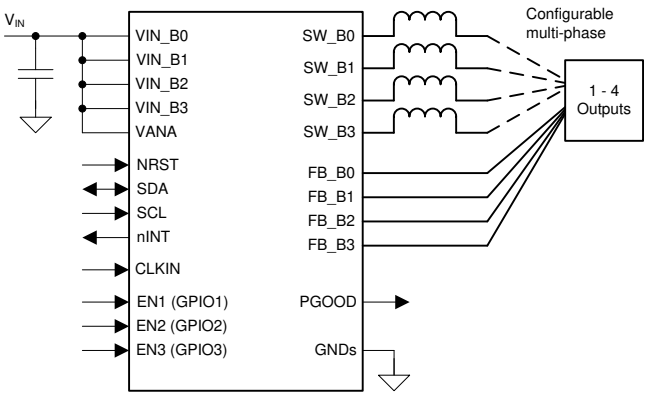

3 Description

The LP8752x-Q1 device is designed to meet the power-management requirements of the latest processors and platforms in various automotive power applications. The device contains four step-down DC/DC converter cores, which are configured as a 4-phase output, 3-phase and 1-phase outputs, 2-phase and 2-phase outputs, one 2-phase and two 1-phase outputs, or four 1-phase outputs. The device is controlled by an I^2C-compatible serial interface and by enable signals.

The automatic pulse-width-modulation (PWM) to pulsed-frequency-modulation (PFM) operation (AUTO mode), together with the automatic phase adding and phase shedding, maximizes efficiency over a wide output-current range. The LP8752x-Q1 supports remote differential-voltage sensing for multiphase outputs to compensate IR drop between the regulator output and the point-of-load (POL) improving the accuracy of the output voltage. The switching clock can be forced to PWM mode and also synchronized to an external clock to minimize the disturbances.

The LP8752x-Q1 device supports load-current measurement without the addition of external current-sense resistors. The device also supports programmable start-up and shutdown delays and sequences synchronized to enable signals. The sequences can include GPIO signals to control external regulators, load switches, and processor reset. During start-up and voltage change, the device controls the output slew rate to minimize output-voltage overshoot and in-rush current.

Device Information(1)

PART NUMBER	PACKAGE	BODY SIZE (NOM)
LP87521-Q1	VQFN-HR (26)	4.50 mm × 4.00 mm
LP87522-Q1		
LP87523-Q1		
LP87524-Q1		
LP87525-Q1		

(1) For all available packages, see the orderable addendum at the end of the data sheet.

Efficiency vs Output Current

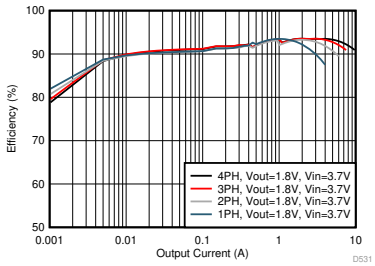

An IMPORTANT NOTICE at the end of this data sheet addresses availability, warranty, changes, use in safety-critical applications, intellectual property matters and other important disclaimers. PRODUCTION DATA.

Table of Contents

1 Features ... 1
2 Applications ... 1
3 Description ... 1
4 Revision History ... 2
5 Device Comparison Table ... 3
6 Pin Configuration and Functions ... 3
7 Specifications ... 5
7.1 Absolute Maximum Ratings ... 5
7.2 ESD Ratings ... 5
7.3 Recommended Operating Conditions ... 5
7.4 Thermal Information ... 6
7.5 Electrical Characteristics ... 6
7.6 I^2C Serial Bus Timing Requirements ... 12
7.7 Typical Characteristics ... 14
8 Detailed Description ... 16
8.1 Overview ... 16
8.2 Functional Block Diagram ... 17
8.3 Feature Descriptions ... 17
8.4 Device Functional Modes ... 34
8.5 Programming ... 36
8.6 Register Maps ... 39
9 Application and Implementation ... 63
9.1 Application Information ... 63
9.2 Typical Applications ... 63
10 Power Supply Recommendations ... 82
11 Layout ... 83
11.1 Layout Guidelines ... 83
11.2 Layout Example ... 84
12 Device and Documentation Support ... 85
12.1 Device Support ... 85
12.2 Documentation Support ... 85
12.3 Related Links ... 85
12.4 Receiving Notification of Documentation Updates 85
12.5 Community Resources ... 85
12.6 Trademarks ... 85
12.7 Electrostatic Discharge Caution ... 85
12.8 Glossary ... 86
13 Mechanical, Packaging, and Orderable Information ... 86

4 Revision History

DATE	REVISION	NOTES
March 2018	*	Initial Release

Copyright © 2018, Texas Instruments Incorporated

5 Device Comparison Table

PART NUMBER	DC/DC CONFIGURATIONS
LP87521-Q1	One 4-phase output
LP87522-Q1	One 3-phase and one 1-phase outputs
LP87523-Q1	One 2-phase and two 1-phase outputs
LP87524-Q1	Four 1-phase outputs
LP87525-Q1	Two 2-phase outputs

6 Pin Configuration and Functions

RNF Package
26-Pin VQFN-HR With Thermal Pad
Top View

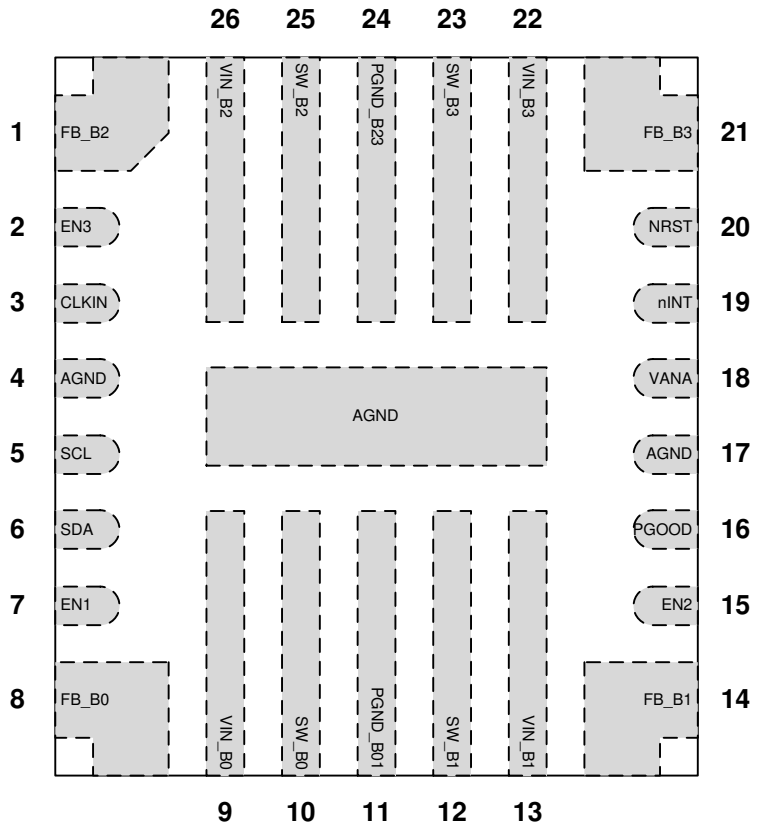

Pin Functions

PIN		TYPE(1)	DESCRIPTION
NO.	NAME		
1	FB_B2	A	Output voltage feedback (positive) for the BUCK2 converter.
2	EN3	D/I/O	Programmable enable signal for the buck regulators (can be also configured to select between two buck output-voltage levels). This pin functions alternatively as GPIO3.
3	CLKIN	D/I	External clock input. Connect this pin to ground if the external clock is not used.
4, 17, Thermal Pad	AGND	G	Ground
5	SCL	D/I	Serial interface clock input for I^2C access. Connect this pin to a pullup resistor.
6	SDA	D/I/O	Serial interface data input and output for I^2C access. Connect this pin to a pullup resistor.
7	EN1	D/I/O	Programmable enable signal for the buck regulators (can be also configured to select between two buck output voltage levels). This pin functions alternatively as GPIO1.
8	FB_B0	A	Output voltage feedback (positive) for the BUCK0 converter.
9	VIN_B0	P	Input for the BUCK0 converter. The separate power pins, VIN_Bx, are not connected together internally. The VIN_Bx pins must be connected together in the application and be locally bypassed.
10	SW_B0	A	BUCK0 switch node
11	PGND_B01	G	Power ground for the BUCK0 and BUCK1 converters
12	SW_B1	A	BUCK1 switch node
13	VIN_B1	P	Input for the BUCK1 converter. The separate power pins, VIN_Bx, are not connected together internally. The VIN_Bx pins must be connected together in the application and be locally bypassed.
14	FB_B1	A	Output voltage feedback (positive) for the BUCK1 converter. This pin functions alternatively as the output ground feedback (negative) for the BUCK0 converter.
15	EN2	D/I/O	Programmable enable signal for the buck regulators (can be also configured to select between two buck output voltage levels). This pin functions alternatively as GPIO2.
16	PGOOD	D/O	Power-good indication signal
18	VANA	P	Supply voltage for the analog and digital blocks. This pin must be connected to the same node as VIN_Bx.
19	nINT	D/O	Open-drain interrupt output. This pin is active low.
20	NRST	D/I	Reset signal for the device
21	FB_B3	A	Output voltage feedback (positive) for the BUCK3 converter. This pin functions alternatively as the output ground feedback (negative) for the BUCK2 converter.
22	VIN_B3	P	Input for the BUCK3 converter. The separate power pins, VIN_Bx, are not connected together internally. The VIN_Bx pins must be connected together in the application and be locally bypassed.
23	SW_B3	A	BUCK3 switch node
24	PGND_B23	G	Power ground for the BUCK2 and BUCK3 converters
25	SW_B2	A	BUCK2 switch node
26	VIN_B2	P	Input for the BUCK2 converter. The separate power pins, VIN_Bx, are not connected together internally. The VIN_Bx pins must be connected together in the application and be locally bypassed.

(1) A: Analog Pin, D: Digital Pin, G: Ground Pin, P: Power Pin, I: Input Pin, O: Output Pin

Copyright © 2018, Texas Instruments Incorporated

7 Specifications

7.1 Absolute Maximum Ratings

Over operating free-air temperature range (unless otherwise noted)[1][2]

		MIN	MAX	UNIT
Voltage on power connections	VIN_Bx, VANA	–0.3	6	V
Voltage on buck switch nodes	SW_Bx	–0.3	(VIN_Bx + 0.3 V) with 6 V maximum	V
Voltage on buck voltage sense nodes	FB_Bx	–0.3	(VANA + 0.3 V) with 6 V maximum	V
Voltage on NRST input	NRST	–0.3	6	V
Voltage on logic pins (input or output pins)	SDA, SCL, nINT, CLKIN	–0.3	6	V
	EN1 (GPIO1), EN2 (GPIO2), EN3 (GPIO3), PGOOD	–0.3	(VANA + 0.3 V) with 6 V maximum	V
Maximum lead temperature (soldering, 10 sec.)			260	°C
Junction temperature, $T_{J\text{-}MAX}$		–40	150	°C
Storage temperature, T_{stg}		–65	150	°C

(1) Stresses beyond those listed under *Absolute Maximum Ratings* may cause permanent damage to the device. These are stress ratings only, which do not imply functional operation of the device at these or any other conditions beyond those indicated under *Recommended Operating Conditions*. Exposure to absolute-maximum-rated conditions for extended periods may affect device reliability.
(2) All voltage values are with respect to network ground.

7.2 ESD Ratings

			VALUE	UNIT
$V_{(ESD)}$ Electrostatic discharge	Human-body model (HBM), per AEC Q100-002[1]		±2000	V
	Charged-device model (CDM), per AEC Q100-011	All pins	±500	
		Corner pins (1, 8, 14, and 21)	±750	

(1) AEC Q100-002 indicates that HBM stressing shall be in accordance with the ANSI/ESDA/JEDEC JS-001 specification.

7.3 Recommended Operating Conditions

Over operating free-air temperature range (unless otherwise noted)

		MIN	MAX	UNIT
INPUT VOLTAGE				
Voltage on power connections	VIN_Bx, VANA	2.8	5.5	V
Voltage on NRST	NRST	1.65	VANA with 5.5 V maximum	V
Voltage on logic pins (input or output pins)	nINT, CLKIN	1.65	5.5	V
Voltage on logic pins (input or output pins)	ENx, PGOOD	0	VANA with 5.5 V maximum	V
Voltage on I^2C interface, standard (100 kHz), fast (400 khz), fast+ (1 MHz), and high-speed (3.4 MHz) modes	SCL, SDA	1.65	1.95	V
Voltage on I^2C interface, standard (100 kHz), fast (400 kHz), and fast+ (1 MHz) modes	SCL, SDA	3.1	VANA with 3.6 V maximum	V
TEMPERATURE				
Junction temperature, T_J		–40	140	°C
Ambient temperature, T_A		–40	125	°C

7.4 Thermal Information

THERMAL METRIC[1]		LP8752x-Q1 RNF (VQFN-HR) 26 PINS	UNIT
$R_{\theta JA}$	Junction-to-ambient thermal resistance	34.6	°C/W
$R_{\theta JC(top)}$	Junction-to-case (top) thermal resistance	16.5	°C/W
$R_{\theta JB}$	Junction-to-board thermal resistance	4.7	°C/W
ψ_{JT}	Junction-to-top characterization parameter	0.6	°C/W
ψ_{JB}	Junction-to-board characterization parameter	4.7	°C/W
$R_{\theta JC(bot)}$	Junction-to-case (bottom) thermal resistance	1.4	°C/W

(1) For more information about traditional and new thermal metrics, see the *Semiconductor and IC Package Thermal Metrics* application report.

7.5 Electrical Characteristics

–40°C ≤ T_J ≤ +140°C, C_{POL} = 22 µF/phase, specified V_{VANA}, V_{VIN_Bx} , V_{NRST}, V_{VOUT_Bx}, and I_{OUT} range, unless otherwise noted. Typical values are at T_J = 25°C, V_{VANA} = V_{VIN_Bx} = 3.7 V, and V_{OUT} = 1 V, unless otherwise noted[1] [2].

PARAMETER			TEST CONDITIONS	MIN	TYP	MAX	UNIT
EXTERNAL COMPONENTS							
C_{IN}	Input filtering capacitance		Connected from VIN_Bx to PGND_Bx	1.9	10		µF
C_{OUT}	Output filtering capacitance per phase, local			10	22		µF
C_{POL}	Optional point-of-load (POL) capacitance per phase				22		µF
$C_{OUT\text{-}TOTAL}$	Total output capacitance (local and POL)	4-phase output	Output voltage slew-rate ≤ 3.8 mV/µs			1000	µF
		3-phase output	Output voltage slew-rate ≤ 3.8 mV/µs			750	
		2-phase output	Output voltage slew-rate ≤ 3.8 mV/µs			500	
		1-phase output	Output voltage slew-rate ≤ 3.8 mV/µs			250	
ESR_C	ESR of the input and output capacitor		1 MHz ≤ f ≤ 10 MHz		2	10	mΩ
L	Inductance of the inductor				0.47		µH
				–30%		30%	
DCR_L	Inductor DCR				25		mΩ
BUCK REGULATOR							
V_{VIN_Bx}	Input voltage range			2.8	3.7	5.5	V
V_{VOUT_Bx}	Programmable output voltage range			0.6		3.36	V
	Output voltage step size		0.6 V ≤ V_{VOUT} < 0.73 V		10		mV
			0.73 V ≤ V_{VOUT} < 1.4 V		5		
			1.4 V ≤ V_{VOUT} ≤ 3.36 V		20		

(1) All voltage values are with respect to network ground.
(2) Minimum (Min) and Maximum (Max) limits are specified by design, test, or statistical analysis. Typical (Typ) numbers are not verified, but do represent the most likely norm.

Copyright © 2018, Texas Instruments Incorporated

Electrical Characteristics (continued)

–40°C ≤ T_J ≤ +140°C, C_{POL} = 22 µF/phase, specified V_{VANA}, V_{VIN_Bx} , V_{NRST}, V_{VOUT_Bx}, and I_{OUT} range, unless otherwise noted. Typical values are at T_J = 25°C, V_{VANA} = V_{VIN_Bx} = 3.7 V, and V_{OUT} = 1 V, unless otherwise noted(1) (2).

PARAMETER			TEST CONDITIONS	MIN	TYP	MAX	UNIT
I_{OUT}	Output current(3) The maximum output current from device is 10A regardless of device phase configurations.	4-phase output	V_{IN} ≥ 3 V			10	A
			2.8 V ≤ V_{IN} < 3 V			7.2	
		3-phase output	V_{IN} ≥ 3 V			9.0	
			2.8 V ≤ V_{IN} < 3 V			6.5	
		2-phase output	V_{IN} ≥ 3 V			8.0	
			2.8 V ≤ V_{IN} < 3 V			6.0	
		1-phase output	V_{IN} ≥ 3 V			4.0	
			2.8 V ≤ V_{IN} < 3 V			3.0	
	Input and output voltage difference Minimum voltage between VIN_x and V_{OUT} to fulfill the electrical characteristics			0.5			V
V_{VOUT_DC}	DC output voltage accuracy, includes voltage reference, DC load and line regulations, process, and temperature		V_{OUT} < 1 V, PWM mode	–20		20	mV
			V_{OUT} ≥ 1 V, PWM mode	–2%		2%	
			V_{OUT} < 1 V, PFM mode	–20		40	mV
			V_{OUT} ≥ 1 V, PFM mode	–2%		2% + 20 mV	
	Ripple voltage	4-phase output	PWM mode, ESR_C < 2 mΩ, L = 0.47 µH		3		mV_{p-p}
			PFM mode, L = 0.47 µH		4		
		3-phase output	PWM mode, ESR_C < 2 mΩ, L = 0.47 µH		4		
			PFM mode, L = 0.47 µH		5		
		2-phase output	PWM mode, ESR_C < 2 mΩ, L = 0.47 µH		6		
			PFM mode, L = 0.47 µH		7		
		1-phase output,	PWM mode, ESR_C < 2 mΩ, L = 0.47 µH		8		
			PFM mode, L = 0.47 µH		14		
DC_{LNR}	DC line regulation		I_{OUT} = $I_{OUT(max)}$		0.1		%/V
DC_{LDR}	DC load regulation in PWM mode		V_{OUT} = 1 V, 0 A ≤ I_{OUT} ≤ $I_{OUT(max)}$		0.8%		

(3) The maximum output current can be limited by the forward current limit $I_{LIM\ FWD}$ and by the junction temperature. The power dissipation inside the die depends on the length of the current pulse and efficiency and the junction temperature may increase to thermal shutdown level if the board and ambient temperatures are high.

Copyright © 2018, Texas Instruments Incorporated

Electrical Characteristics (continued)

–40°C ≤ T_J ≤ +140°C, C_{POL} = 22 µF/phase, specified V_{VANA}, V_{VIN_Bx} , V_{NRST}, V_{VOUT_Bx}, and I_{OUT} range, unless otherwise noted. Typical values are at T_J = 25°C, V_{VANA} = V_{VIN_Bx} = 3.7 V, and V_{OUT} = 1 V, unless otherwise noted(1) (2).

PARAMETER			TEST CONDITIONS	MIN	TYP	MAX	UNIT
T_{LDSR}	Transient load step response	4-phase output	0 A ≤ I_{OUT} ≤ 8 A, t_r = t_f = 10 µs, PWM mode, C_{OUT} = 22 µF/phase, L = 0.47 µH, C_{POL} = 22 µF/phase	–3%		3%	mV
			0.1 A ≤ I_{OUT} ≤ 8 A, t_r = t_f = 1 µs, PWM mode, C_{OUT} = 22 µF/phase, L = 0.47 µH, C_{POL} = 22 µF/phase		±40		
		3-phase output	0 A ≤ I_{OUT} ≤ 6 A, t_r = t_f = 10 µs, PWM mode, C_{OUT} = 22 µF/phase, L = 0.47 µH, C_{POL} = 22 µF/phase	–3%		3%	
			0.1 A ≤ I_{OUT} ≤ 6 A, t_r = t_f = 1 µs, PWM mode, C_{OUT} = 22 µF/phase, L = 0.47 µH, C_{POL} = 22 µF/phase		±40		
		2-phase output	0 A ≤ I_{OUT} ≤ 4 A, t_r = t_f = 10 µs, PWM mode, C_{OUT} = 22 µF/phase, L = 0.47 µH, C_{POL} = 22 µF/phase	–3%		3%	
			0.1 A ≤ I_{OUT} ≤ 4 A, t_r = t_f = 1 µs, PWM mode, C_{OUT} = 22 µF/phase, L = 0.47 µH, C_{POL} = 22 µF/phase		±40		
		1-phase output	0 A ≤ I_{OUT} ≤ 2 A, t_r = t_f = 10 µs, PWM mode, C_{OUT} = 22 µF, L = 0.47 µH, C_{POL} = 22 µF	–3%		3%	
			0.1 A ≤ I_{OUT} ≤ 2 A, t_r = t_f = 1 µs, PWM mode, C_{OUT} = 22 µF, L = 0.47 µH, C_{POL} = 22 µF		±40		
T_{LNSR}	Transient line response		V_{VIN_Bx} stepping 3 V ↔ 3.5 V, t_r = t_f = 10 µs, I_{OUT} = $I_{OUT(max)}$		±5		mV
$I_{LIM\ FWD}$	Forward current limit (peak for each switching cycle) The max peak current limit of all combined phases cannot exceed 14A.		Programmable range	1.5		5	A
			Step size		0.5		
			Accuracy, V_{VIN_Bx} ≥ 3 V, ILIM ≥ 3 A	–5%	7.5%	20%	
			Accuracy, 2.8 V ≤ V_{VIN_Bx} < 3 V, I_{LIM} ≥ 3. A	–20%	7.5%	20%	
$I_{LIM\ NEG}$	Negative current limit per phase (peak for each switching cycle)			1.6	2	2.4	A
$R_{DS(ON)\ HS\ FET}$	On-resistance, high-side FET		Each phase, between VIN_Bx and SW_Bx pins, I = 1 A		29	65	mΩ
$R_{DS(ON)\ LS\ FET}$	On-resistance, low-side FET		Each phase, between SW_Bx and PGND_Bx pins, I = 1 A		17	35	mΩ
f_{SW}	Switching frequency, PWM mode			1.8	2	2.2	MHz
	Current balancing for multiphase outputs		Current mismatch between phases, I_{OUT} > 1 A/phase			10%	
	Start-up time (soft start)		From ENx to V_{OUT} = 0.35 V (slew-rate control begins), C_{OUT_TOTAL} = 44 µF/phase		200		µs

Copyright © 2018, Texas Instruments Incorporated

Electrical Characteristics (continued)

–40°C ≤ T_J ≤ +140°C, C_{POL} = 22 µF/phase, specified V_{VANA}, V_{VIN_Bx} , V_{NRST}, V_{VOUT_Bx}, and I_{OUT} range, unless otherwise noted. Typical values are at T_J = 25°C, V_{VANA} = V_{VIN_Bx} = 3.7 V, and V_{OUT} = 1 V, unless otherwise noted(1) (2).

PARAMETER		TEST CONDITIONS	MIN	TYP	MAX	UNIT
	Output voltage slew-rate(4)	$C_{OUT\text{-}TOTAL}$ ≤ 80 µF/phase	–15%	10	15%	mV/µs
		$C_{OUT\text{-}TOTAL}$ ≤ 130 µF/phase	–15%	7.5	15%	
		$C_{OUT\text{-}TOTAL}$ ≤ 250 µF/phase	–15%	3.8	15%	
		$C_{OUT\text{-}TOTAL}$ ≤ 500 µF/phase	–15%	1.9	15%	
		$C_{OUT\text{-}TOTAL}$ ≤ 500 µF/phase	–15%	0.94	15%	
		$C_{OUT\text{-}TOTAL}$ ≤ 500 µF/phase	–15%	0.47	15%	
$I_{PFM\text{-}PWM}$	PFM-to-PWM current threshold(5)			600		mA
$I_{PWM\text{-}PFM}$	PWM-to-PFM current threshold(5)			200		mA
I_{ADD}	Phase adding level (multiphase rails)	From 1-phase to 2-phase		1		A
		From 2-phase to 3-phase		2		
		From 3-phase to 4-phase		3		
I_{SHED}	Phase shedding level (multiphase rails)	From 2-phase to 1-phase		0.7		A
		From 3-phase to 2-phase		1.5		
		From 4-phase to 3-phase		2.4		
	Output pulldown resistance	Regulator disabled	160	230	300	Ω
	Output voltage monitoring for PGOOD pin	Overvoltage monitoring (compared to DC output-voltage level, V_{VOUT_DC})	39	50	64	mV
		Undervoltage monitoring (compared to DC output-voltage level, V_{VOUT_DC})	–53	–40	–29	
		Debounce time during regulator enable PGOOD_SET_DELAY = 0h	4		10	µs
		Debounce time during regulator enable PGOOD_SET_DELAY = 1h	10	11	13	ms
		Deglitch time during operation and after voltage change	4		10	µs
	Power-good threshold for interrupt BUCKx_PG_INT, difference from final voltage	Rising ramp voltage, enable or voltage change	–20	–14	–8	mV
		Falling ramp voltage, voltage change	8	14	20	
	Power-good threshold for status bit BUCKx_PG_STAT	During operation, status signal is forced to 0h during voltage change	–20	–14	–8	mV

(4) Output capacitance, forward and negative current limits and load current may limit the maximum and minimum slew rates. The actual set fixed slew rate value for specific part number is listed in corresponding TRM document.
(5) The final PFM-to-PWM and PWM-to-PFM switchover current varies slightly and is dependent on the output voltage, input voltage, and the inductor current level.

Electrical Characteristics (continued)

–40°C ≤ T_J ≤ +140°C, C_{POL} = 22 µF/phase, specified V_{VANA}, V_{VIN_Bx} , V_{NRST}, V_{VOUT_Bx}, and I_{OUT} range, unless otherwise noted. Typical values are at T_J = 25°C, V_{VANA} = V_{VIN_Bx} = 3.7 V, and V_{OUT} = 1 V, unless otherwise noted(1) (2).

PARAMETER		TEST CONDITIONS	MIN	TYP	MAX	UNIT
EXTERNAL CLOCK AND PLL						
	Nominal frequency of the external input clock		1		24	MHz
	Nominal frequency step size of the external input clock			1		MHz
	Required accuracy from nominal frequency of the external input clock		–30%		10%	
	Delay time for missing external clock detection				1.8	µs
	Delay and debounce time for external clock detection				20	µs
	Clock change delay (internal to external) delay from valid clock detection to use of external clock			600		µs
	Cycle-to-cycle PLL output clock jitter			300		ps, p-p
PROTECTION FUNCTIONS						
	Thermal warning	Temperature rising, TDIE_WARN_LEVEL = 0h	115	125	135	°C
		Temperature rising, TDIE_WARN_LEVEL = 1h	127	137	147	
	Thermal warning hysteresis			20		°C
	Thermal shutdown	Temperature rising	140	150	160	°C
	Thermal shutdown hysteresis			20		°C
$VANA_{OVP}$	VANA overvoltage	Voltage rising	5.6	5.8	6.1	V
		Voltage falling	5.45	5.73	5.96	
	VANA overvoltage hysteresis		40			mV
$VANA_{UVLO}$	VANA undervoltage lockout	Voltage rising	2.51	2.63	2.75	V
		Voltage falling	2.5	2.6	2.7	
LOAD CURRENT MEASUREMENT						
	Current measurement range	Output current for maximum code			20.47	A
	Resolution	LSB		20		mA
	Measurement accuracy	I_{OUT} > 1 A		< 10%		
	Measurement time	PFM mode (automatically changing to PWM mode for the measurement)		45		µs
		PWM mode		4		
CURRENT CONSUMPTION						
	Shutdown current consumption	From VANA and VIN_Bx pins, NRST = 0 V, VANA = VIN_Bx = 3.7 V		1.4		µA
	Standby current consumption	From VANA and VIN_Bx pins, NRST = 1.8 V, VANA = VIN_Bx = 3.7 V, regulators disabled		6.7		µA

Copyright © 2018, Texas Instruments Incorporated

Electrical Characteristics (continued)

–40°C ≤ T_J ≤ +140°C, C_{POL} = 22 µF/phase, specified V_{VANA}, V_{VIN_Bx} , V_{NRST}, V_{VOUT_Bx}, and I_{OUT} range, unless otherwise noted. Typical values are at T_J = 25°C, V_{VANA} = V_{VIN_Bx} = 3.7 V, and V_{OUT} = 1 V, unless otherwise noted(1) (2).

PARAMETER		TEST CONDITIONS	MIN	TYP	MAX	UNIT
	Active current consumption in PFM mode	4-phase enabled: From VANA and VIN_Bx pins, NRST = 1.8 V, VANA = VIN_Bx = 3.7 V, I_{OUT} = 0 mA, not switching, one regulator enabled, internal RC oscillator, PGOOD monitoring enabled		77		µA
		3-phase enabled: From VANA and VIN_Bx pins, NRST = 1.8 V, VANA = VIN_Bx = 3.7 V, I_{OUT} = 0 mA, not switching, one regulator enabled, internal RC oscillator, PGOOD monitoring enabled		71		
		2-phase enabled: From VANA and VIN_Bx pins, NRST = 1.8 V, VANA = VIN_Bx = 3.7 V, I_{OUT} = 0 mA, not switching, one regulator enabled, internal RC oscillator, PGOOD monitoring enabled		65		
		1-phase enabled: From VANA and VIN_Bx pins, NRST = 1.8 V, VANA = VIN_Bx = 3.7 V, I_{OUT} = 0 mA, not switching, one regulator enabled, internal RC oscillator, PGOOD monitoring enabled		57		
	Active current consumption during PWM operation	Each phase		17		mA
	PLL and clock detector current consumption	Additional current consumption when internal RC oscillator, clock detector and PLL are enabled		2		mA
DIGITAL INPUT SIGNALS: NRST, EN1, EN2, EN3, EN4, SCL, SDA, GPIO1, GPIO2, GPIO3, CLKIN						
V_{IL}	Input low level				0.4	V
V_{IH}	Input high level		1.2			V
V_{HYS}	Hysteresis of Schmitt trigger inputs		10	77	200	mV
	ENx pulldown resistance	ENx_PD = 1h		500		kΩ
	NRST pulldown resistance	Always present	650	1150	1700	kΩ
DIGITAL OUTPUT SIGNALS: nINT						
V_{OL}	Output low level	I_{SOURCE} = 2 mA			0.4	V
R_P	External pullup resistor	To VIO supply		10		kΩ
DIGITAL OUTPUT SIGNALS: SDA						
V_{OL}	Output low level	I_{SOURCE} = 10 mA			0.4	V
DIGITAL OUTPUT SIGNALS: PGOOD, GPIO1, GPIO2, GPIO3						
V_{OL}	Output low level	I_{SOURCE} = 2 mA			0.4	V
V_{OH}	Output high level, configured to push-pull	I_{SINK} = 2 mA	V_{VANA} – 0.4		V_{VANA}	V
V_{PU}	Supply voltage for external pull-up resistor, configured to open-drain				V_{VANA}	V
R_{PU}	External pullup resistor, configured to open-drain			10		kΩ
ALL DIGITAL INPUTS						
I_{LEAK}	Input current	All logic inputs over pin voltage range (except NRST)	−1		1	µA

7.6 I²C Serial Bus Timing Requirements

These specifications are ensured by design. V_{IN_Bx} = 3.7 V, unless otherwise noted.

			MIN	MAX	UNIT
f_{SCL}	Serial clock frequency	Standard mode		100	kHz
		Fast mode		400	
		Fast mode+		1	MHz
		High-speed mode, C_b = 100 pF		3.4	
		High-speed mode, C_b = 400 pF		1.7	
t_{LOW}	SCL low time	Standard mode	4.7		µs
		Fast mode	1.3		
		Fast mode+	0.5		
		High-speed mode, C_b = 100 pF	160		ns
		High-speed mode, C_b = 400 pF	320		
t_{HIGH}	SCL high time	Standard mode	4		µs
		Fast mode	0.6		
		Fast mode+	0.26		
		High-speed mode, C_b = 100 pF	60		ns
		High-speed mode, C_b = 400 pF	120		
$t_{SU;DAT}$	Data setup time	Standard mode	250		ns
		Fast mode	100		
		Fast mode+	50		
		High-speed mode	10		
$t_{HD;DAT}$	Data hold time	Standard mode	10	3450	ns
		Fast mode	10	900	
		Fast mode+	10		
		High-speed mode, C_b = 100 pF	10	70	ns
		High-speed mode, C_b = 400 pF	10	150	
$t_{SU;STA}$	Setup time for a start or a repeated start condition	Standard mode	4.7		µs
		Fast mode	0.6		
		Fast mode+	0.26		
		High-speed mode	160		ns
$t_{HD;STA}$	Hold time for a start or a repeated start condition	Standard mode	4		µs
		Fast mode	0.6		
		Fast mode+	0.26		
		High-speed mode	160		ns
t_{BUF}	Bus free time between a stop and start condition	Standard mode	4.7		µs
		Fast mode	1.3		
		Fast mode+	0.5		
$t_{SU;STO}$	Setup time for a stop condition	Standard mode	4		µs
		Fast mode	0.6		
		Fast mode+	0.26		
		High-speed mode	160		ns
t_{rDA}	Rise time of SDA signal	Standard mode		1000	ns
		Fast mode	20	300	
		Fast mode+		120	
		High-speed mode, C_b = 100 pF	10	80	
		High-speed mode, C_b = 400 pF	20	160	

Copyright © 2018, Texas Instruments Incorporated

I²C Serial Bus Timing Requirements (continued)

These specifications are ensured by design. V_{IN_Bx} = 3.7 V, unless otherwise noted.

			MIN	MAX	UNIT
t_{fDA}	Fall time of SDA signal	Standard mode		300	ns
		Fast mode	20 × (V_{DD} / 5.5 V)	300	
		Fast mode+	20 × (V_{DD} / 5.5 V)	120	
		High-speed mode, C_b = 100 pF	10	80	
		High-speed mode, C_b = 400 pF	30	160	
t_{rCL}	Rise time of SCL signal	Standard mode		1000	ns
		Fast mode	20	300	
		Fast mode+		120	
		High-speed mode, C_b = 100 pF	10	40	
		High-speed mode, C_b = 400 pF	20	80	
t_{rCL1}	Rise time of SCL signal after a repeated start condition and after an acknowledge bit	High-speed mode, C_b = 100 pF	10	80	ns
		High-speed mode, C_b = 400 pF	20	160	
t_{fCL}	Fall time of a SCL signal	Standard mode		300	ns
		Fast mode	20 × (V_{DD} / 5.5 V)	300	
		Fast mode+	20 × (V_{DD} / 5.5 V)	120	
		High-speed mode, C_b = 100 pF	10	40	
		High-speed mode, C_b = 400 pF	20	80	
C_b	Capacitive load for each bus line (SCL and SDA)			400	pF
t_{SP}	Pulse width of spike suppressed (SCL and SDA spikes that are less than the indicated width are suppressed)	Standard mode, fast mode and fast mode+		50	ns
		High-speed mode		10	

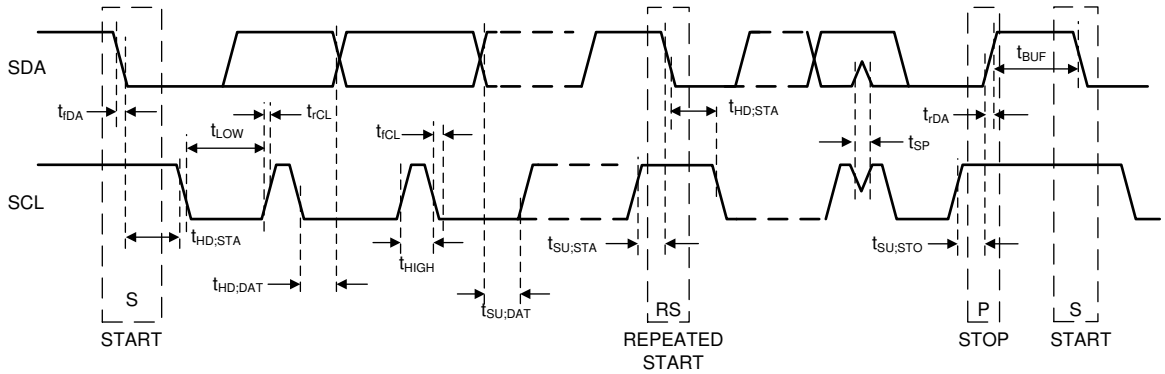

Figure 1. I²C Timing

7.7 Typical Characteristics

Unless otherwise specified: T_A = 25°C, V_{IN} = 3.7 V, V_{OUT} = 1 V, $V_{(NRST)}$ = 1.8 V, f_{SW} = 2 MHz, L = 0.47 µH (TOKO DFE252012PD-R47M), C_{OUT} = 22 µF / phase, C_{POL} = 22 µF / phase.

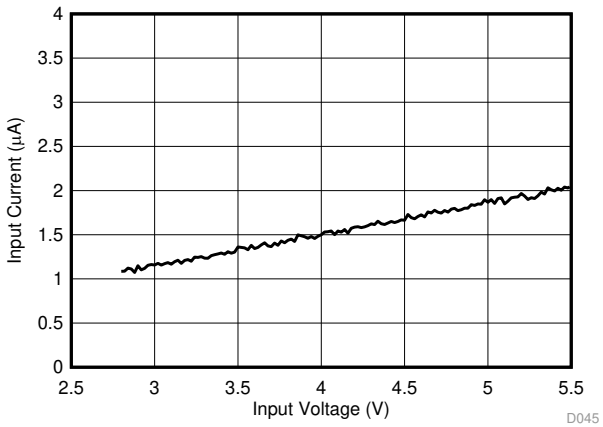

$V_{(NRST)}$ = 0 V

Figure 2. Shutdown Current Consumption vs Input Voltage

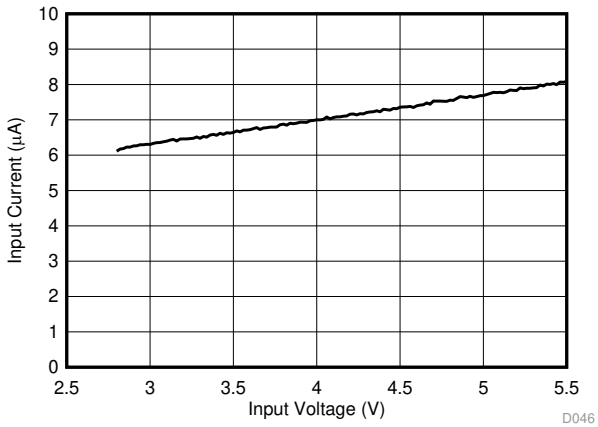

$V_{(NRST)}$ = 1.8 V Regulators disabled

Figure 3. Standby Current Consumption vs Input Voltage

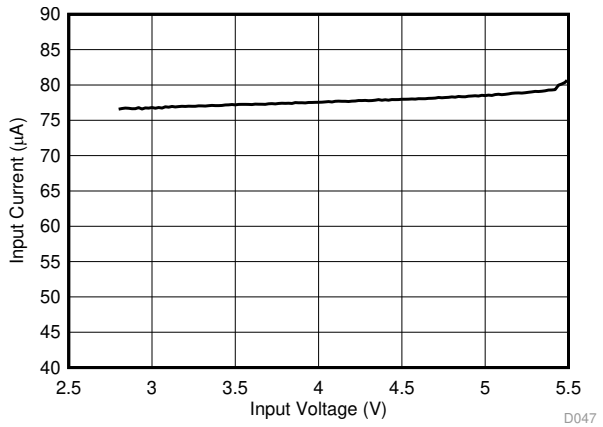

$V_{(NRST)}$ = 1.8 V Load = 0 mA

Figure 4. PFM Mode Current Consumption vs Input Voltage (4-Phase Output)

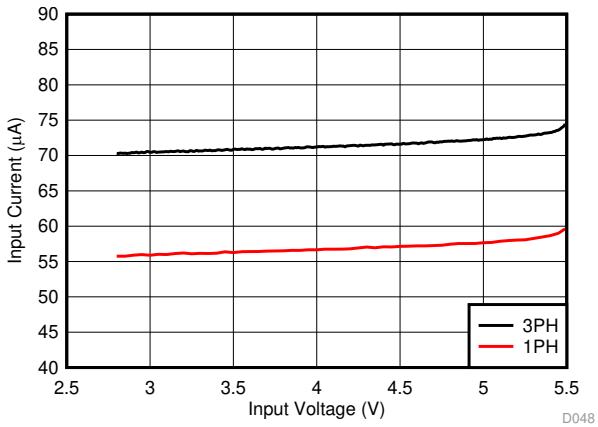

$V_{(NRST)}$ = 1.8 V Load = 0 mA

Figure 5. PFM Mode Current Consumption vs Input Voltage, One Regulator Enabled (3+1-Phase Output)

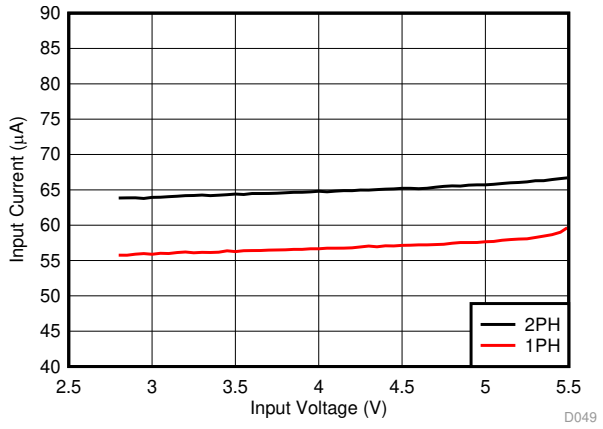

$V_{(NRST)}$ = 1.8 V Load = 0 mA

Figure 6. PFM Mode Current Consumption vs Input Voltage, One Regulator Enabled (2+1+1-Phase Output)

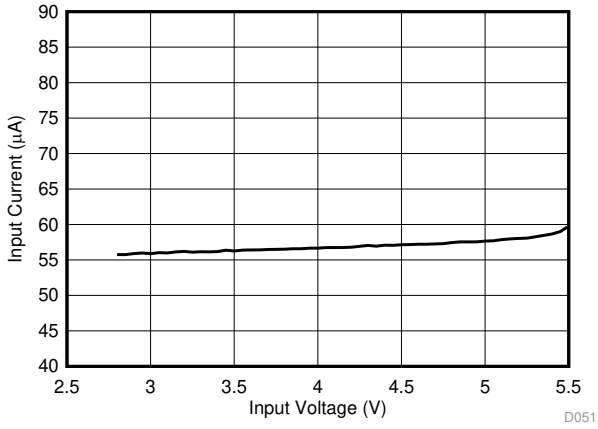

$V_{(NRST)}$ = 1.8 V Load = 0 mA

Figure 7. PFM Mode Current Consumption vs Input Voltage, One Regulator Enabled (1+1+1+1-Phase Output)

Copyright © 2018, Texas Instruments Incorporated

Typical Characteristics (continued)

Unless otherwise specified: T_A = 25°C, V_{IN} = 3.7 V, V_{OUT} = 1 V, $V_{(NRST)}$ = 1.8 V, f_{SW} = 2 MHz, L = 0.47 µH (TOKO DFE252012PD-R47M), C_{OUT} = 22 µF / phase, C_{POL} = 22 µF / phase.

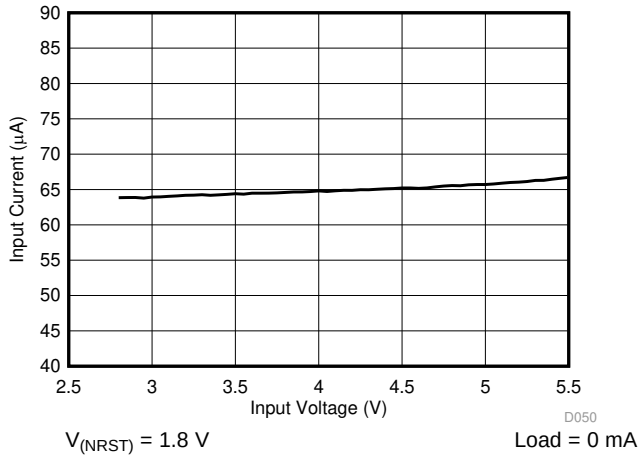

Figure 8. PFM Mode Current Consumption vs Input Voltage, One Regulator Enabled (2+2-Phase Output)

8 Detailed Description

8.1 Overview

The LP8752x-Q1 is a high-efficiency, high-performance power supply device with four step-down DC/DC converter cores for automotive applications. Table 1 lists the output characteristics of the regulators.

NOTE

Maximum output current is given as the maximum capability per rail. For each device the total combined output current must not exceed 10 A.

Table 1. Supply Specification

DEVICE	SUPPLY	OUTPUT		
		V_{OUT} RANGE	RESOLUTION	I_{MAX} MAXIMUM OUTPUT CURRENT
LP87521-Q1	BUCK0, BUCK1, BUCK2, BUCK3 in one 4-phase output	0.6 to 3.36 V	10 mV (0.6 V to 0.73 V) 5 mV (0.73 V to 1.4 V) 20 mV (1.4 V to 3.36 V)	10 A
LP87522-Q1	BUCK0, BUCK1, BUCK2 in one 3-phase output	0.6 to 3.36 V	10 mV (0.6 V to 0.73 V) 5 mV (0.73 V to 1.4 V) 20 mV (1.4 V to 3.36 V)	9 A
	BUCK3 in 1-phase output	0.6 to 3.36 V	10 mV (0.6 V to 0.73 V) 5 mV (0.73 V to 1.4 V) 20 mV (1.4 V to 3.36 V)	4 A
LP87523-Q1	BUCK0, BUCK1 in one 2-phase output	0.6 to 3.36 V	10 mV (0.6 V to 0.73 V) 5 mV (0.73 V to 1.4 V) 20 mV (1.4 V to 3.36 V)	8 A
	BUCK2 in 1-phase output	0.6 to 3.36 V	10 mV (0.6 V to 0.73 V) 5 mV (0.73 V to 1.4 V) 20 mV (1.4 V to 3.36 V)	4 A
	BUCK3 in 1-phase output	0.6 to 3.36 V	10 mV (0.6 V to 0.73 V) 5 mV (0.73 V to 1.4 V) 20 mV (1.4 V to 3.36 V)	4 A
LP87524-Q1	BUCK0 in 1-phase output	0.6 to 3.36 V	10 mV (0.6 V to 0.73 V) 5 mV (0.73 V to 1.4 V) 20 mV (1.4 V to 3.36 V)	4 A
	BUCK1 in 1-phase output	0.6 to 3.36 V	10 mV (0.6 V to 0.73 V) 5 mV (0.73 V to 1.4 V) 20 mV (1.4 V to 3.36 V)	4 A
	BUCK2 in 1-phase output	0.6 to 3.36 V	10 mV (0.6 V to 0.73 V) 5 mV (0.73 V to 1.4 V) 20 mV (1.4 V to 3.36 V)	4 A
	BUCK3 in 1-phase output	0.6 to 3.36 V	10 mV (0.6 V to 0.73 V) 5 mV (0.73 V to 1.4 V) 20 mV (1.4 V to 3.36 V)	4 A
LP87525-Q1	BUCK0, BUCK1 in 2-phase output	0.6 to 3.36 V	10 mV (0.6 V to 0.73 V) 5 mV (0.73 V to 1.4 V) 20 mV (1.4 V to 3.36 V)	8 A
	BUCK2, BUCK3 in 2-phase output	0.6 to 3.36 V	10 mV (0.6 V to 0.73 V) 5 mV (0.73 V to 1.4 V) 20 mV (1.4 V to 3.36 V)	8 A

The LP8752x-Q1 also supports switching clock synchronization to an external clock. The nominal frequency of the external clock can be from 1 MHz to 24 MHz with 1-MHz steps.

Additional features include:

- Soft start
- Input voltage protection:
  - Undervoltage lockout
  - Overvoltage protection
- Output voltage monitoring and protection:
  - Overvoltage monitoring
  - Undervoltage monitoring
  - Overload protection
- Thermal warning

Copyright © 2018, Texas Instruments Incorporated

- Thermal shutdown

Three enable signals can be multiplexed to general purpose I/O (GPIO) signals. The direction and output type (open-drain or push-pull) are programmable for the GPIOs.

8.2 Functional Block Diagram

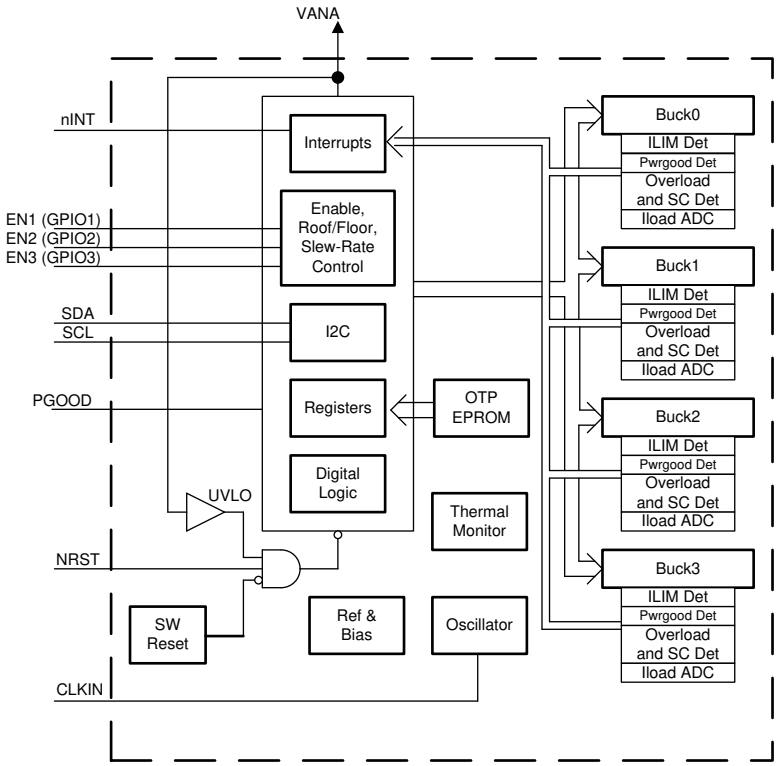

Copyright © 2017, Texas Instruments Incorporated

8.3 Feature Descriptions

8.3.1 Multi-Phase DC/DC Converters

8.3.1.1 Overview

The LP8752x-Q1 includes four step-down DC/DC converter cores which can be configured for:

- 4-phase single output
- 3-phase and single-phase outputs
- dual-phase and two single-phase outputs
- four single-phase outputs
- two dual-phase outputs

The cores are designed for flexibility; most of the functions are programmable, thus allowing optimization of the regulator operation for each application.

The LP8752x-Q1 has the following features:

- DVS support
- Automatic mode control based on the loading (PFM or PWM mode)
- Forced-PWM mode operation
- Optional external clock input to minimize crosstalk
- Optional spread spectrum technique to decrease EMI
- Phase control for optimized EMI

Feature Descriptions (continued)

- Synchronous rectification
- Current mode loop with PI compensator
- Soft start
- Power-Good flag with maskable interrupt
- Power-Good signal (PGOOD) with selectable sources
- Average output current sensing (for PFM entry, phase shedding/adding, and load current measurement)
- Current balancing between the phases of the converter
- Differential voltage sensing from point of the load for multiphase output
- Dynamic phase shedding/adding, each output being phase shifted

The following parameters can be programmed via registers:

- Output voltage
- Forced-PWM operation
- Forced multiphase operation for multiphase outputs (forces also the PWM operation)
- Enable and disable delays for regulators and GPIOs controlled by ENx pins

There are two modes of operation for the converter, depending on the output current required: pulse-width modulation (PWM) and pulse-frequency modulation (PFM). The converter operates in PWM mode at high load currents of approximately 600 mA or higher. When operating in PWM mode the phases of a multiphase regulator are automatically added/shedded based on the load current level. Lighter output current loads cause the converter to automatically switch into PFM mode for decreased current consumption when forced-PWM mode is disabled. The forced multiphase mode can be enabled for highest transient performance.

A multiphase synchronous buck converter offers several advantages over one power stage converter. For application processor power delivery, lower ripple on the input and output currents and faster transient response to load steps are the most significant advantages. Also, because the load current is evenly shared among multiple channels in multiphase output configuration, the heat generated is greatly decreased for each channel due to the fact that power loss is proportional to square of current. The physical size of the output inductor shrinks significantly due to this heat reduction. Figure 9 shows a block diagram of a single core.

Interleaving switching action of the multiphase converters is shown in Figure 10.

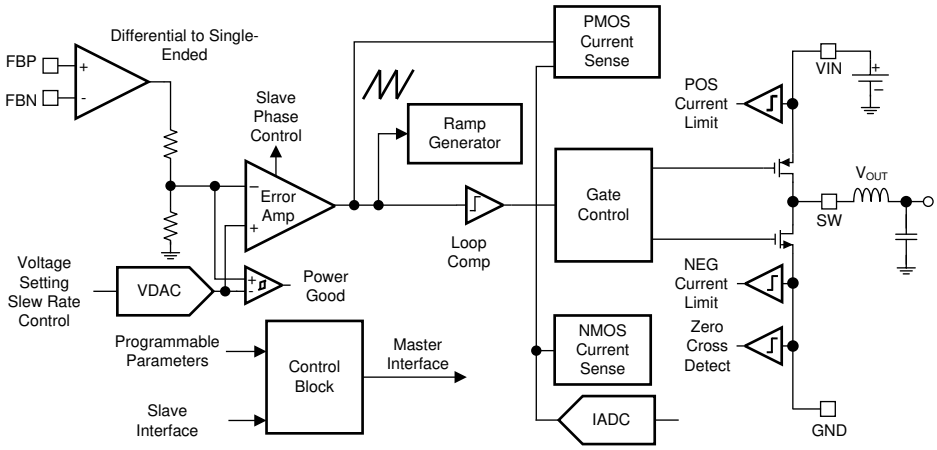

Copyright © 2017, Texas Instruments Incorporated

Figure 9. Detailed Block Diagram Showing One Core

Copyright © 2018, Texas Instruments Incorporated

Feature Descriptions (continued)

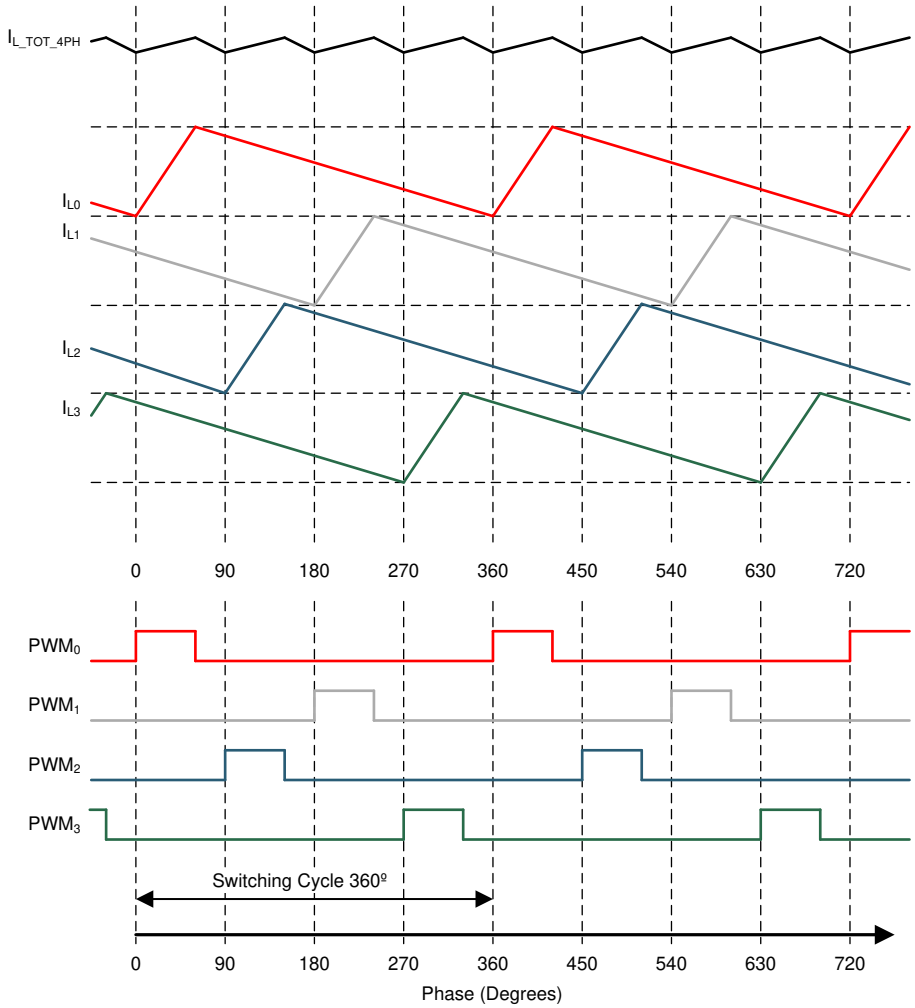

(1) Graph is not in scale and is for illustrative purposes only.

Figure 10. Example of PWM Timings, Inductor Current Waveforms, and Total Output Current in 4-Phase Configuration.

8.3.1.2 Multiphase Operation, Phase Adding, and Phase-Shedding

Under heavy load conditions, the 4-phase converter switches each channel 90° apart. As a result, the 4-phase converter has an effective ripple frequency four times greater than the switching frequency of any one phase. In the same way 3-phase converter has an effective ripple frequency three times greater and 2-phase converter has an effective ripple frequency two times greater than the switching frequency of any one phase. However, the parallel operation decreases the efficiency at light load conditions. In order to overcome this operational inefficiency, the LP8752x-Q1 can change the number of active phases to optimize efficiency for the variations of the load. This is called phase adding/shedding. The concept is shown in Figure 11.

The converter can be forced to multiphase operation by the BUCKx_FPWM_MP bit in BUCKx_CTRL1 register. If the regulator operates in forced multiphase mode (two phases in the dual-phase configuration, three phases in three-phase configuration and four phases in a four-phase configuration) the forced-PWM operation is automatically used. If the multiphase operation is not forced, the number of phases are added and shedded automatically to follow the required output current.

Feature Descriptions (continued)

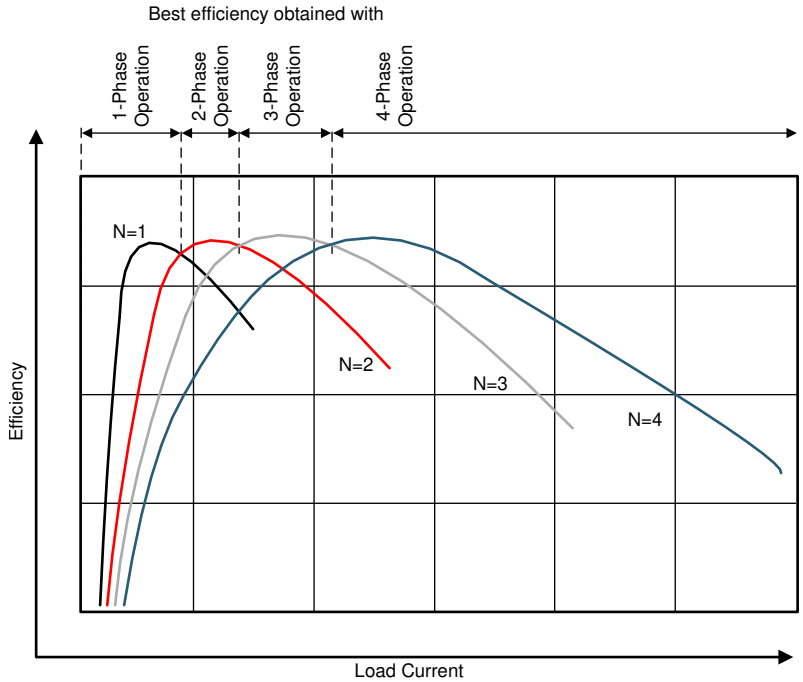

(1) Graph is not in scale and is for illustrative purposes only.

Figure 11. Multiphase Buck Converter Efficiency vs Number of Phases (Converters in PWM Mode)

8.3.1.3 Transition Between PWM and PFM Modes

Normal PWM mode operation with phase-adding/shedding optimizes efficiency at mid-to-full load at the expense of light-load efficiency. The LP8752x-Q1 converter operates in PWM mode at load current of about 600 mA or higher. At lighter load-current levels the device automatically switches into PFM mode for decreased current consumption when forced-PWM mode is disabled (AUTO-mode operation). By combining the PFM and the PWM modes a high efficiency is achieved over a wide output-load-current range.

8.3.1.4 Multiphase Switcher Configurations

In single 4-phase output configuration the BUCK0 is master for the BUCK0, BUCK1, BUCK2, BUCK3 output, in 3-phase and single-phase outputs configuration the BUCK0 is master for the multiphase output BUCK0, BUCK1, BUCK2, in 2-phase and two single-phase outputs configuration the BUCK0 is master for the BUCK0, BUCK1 output and in two 2-phase outputs configuration the BUCK0 is master for BUCK0, BUCK1 output, and the BUCK2 is master for BUCK2, BUCK3 output.

In the multiphase configuration the control of the multiphase regulator settings is done using the control registers of the master buck. The following slave registers are ignored:

- BUCKx_CTRL1 register, except EN_RDISx bit
- BUCKx_VOUT register
- BUCKx_FLOOR_VOUT register
- BUCKx_DELAY register
- interrupt bits related to the slave buck, except BUCKx_ILIM_INT

8.3.1.5 Buck Converter Load-Current Measurement

Buck load current can be monitored via I^2C registers. The monitored buck converter is selected with the LOAD_CURRENT_BUCK_SELECT[1:0] bits in SEL_I_LOAD register. A write to this selection register starts a current measurement sequence. The regulator is forced to PWM mode during the measurement. The measurement sequence is 50 µs long, maximum. The LP8752x-Q1 device can be configured to give out an interrupt (I_LOAD_READY bit in INT_TOP1 register) after the load current measurement sequence is finished.

Copyright © 2018, Texas Instruments Incorporated

Feature Descriptions (continued)

Load current measurement interrupt can be masked with I_LOAD_READY_MASK bit (TOP_MASK1 register). The measurement result can be read from registers I_LOAD_1 and I_LOAD_2. Register I_LOAD_1 bits BUCK_LOAD_CURRENT[7:0] give out the LSB bits and register I_LOAD_2 bits BUCK_LOAD_CURRENT[9:8] the MSB bits. The measurement result BUCK_LOAD_CURRENT[9:0] LSB is 20 mA, and maximum value of the measurement corresponds to 20.46 A. If the selected buck regulator is a master phase, the measured current is the total value of the master and slave phases. If the selected buck regulator is single-phase or slave phase, the measured current is the output current of the selected phase.

8.3.1.6 Spread-Spectrum Mode

Systems with periodic switching signals may generate a large amount of switching noise in a set of narrowband frequencies (the switching frequency and its harmonics). The usual solution to decrease noise coupling is to add EMI filters and shields to the boards. The LP8752x-Q1 device has register-selectable spread-spectrum mode which minimizes the need for output filters, ferrite beads, or chokes. In spread-spectrum mode, the switching frequency varies around the center frequency, reducing the EMI emissions radiated by the converter and associated passive components and PCB traces (see Figure 12). This feature is available only when internal RC oscillator is used (PLL_MODE[1:0] = 00 in PLL_CTRL register), and it is enabled with the EN_SPREAD_SPEC bit (PIN_FUNCTION register), and it affects all the buck cores.

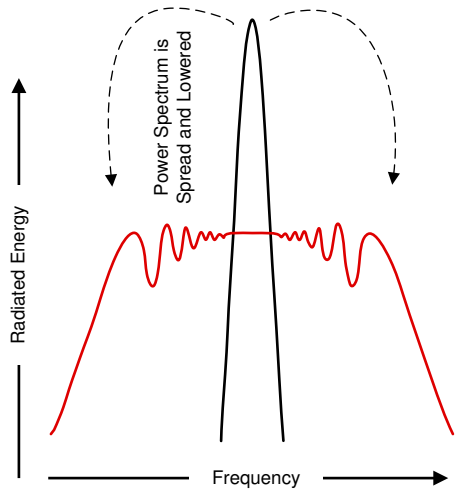

Where a fixed-frequency converter exhibits large amounts of spectral energy at the switching frequency, the spread-spectrum architecture of the LP8752x-Q1 spreads that energy over a large bandwidth.

Figure 12. Spread-Spectrum Modulation

8.3.2 Sync Clock Functionality

The LP8752x-Q1 device contains a CLKIN input to synchronize the switching clock of the buck regulator with the external clock. The block diagram of the clocking and PLL module is shown in Figure 13. Depending on the PLL_MODE[1:0] bits (in PLL_CTRL register) and the external clock availability, the external clock is selected, and interrupt is generated, as shown in Table 2. The interrupt can be masked with SYNC_CLK_MASK bit in TOP_MASK1 register. The nominal frequency of the external input clock is set by EXT_CLK_FREQ[4:0] bits (in PLL_CTRL register), and it can be from 1 MHz to 24 MHz with 1-MHz steps. The external clock must be inside accuracy limits (–30%/+10%) for valid clock detection.

The NO_SYNC_CLK interrupt (in INT_TOP1 register) is also generated in cases when the external clock is expected but it is not available. These cases are start-up (read OTP-to-STANDBY transition) when PLL_MODE[1:0] = 01 and regulator enable (STANDBY-to-ACTIVE transition) when PLL_MODE[1:0] = 10.

Feature Descriptions (continued)

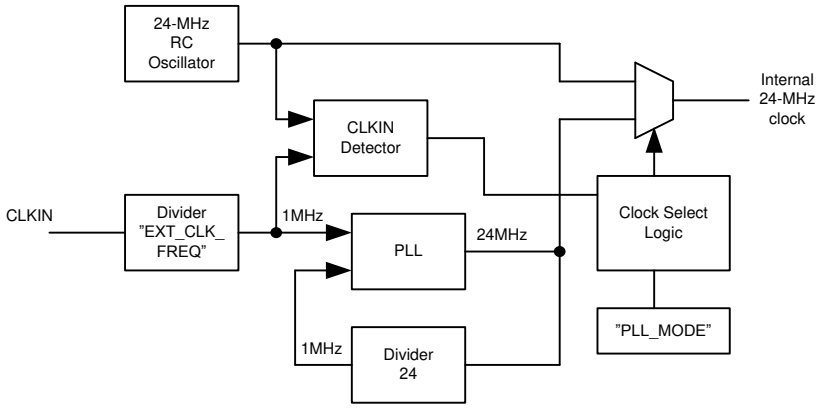

Copyright © 2017, Texas Instruments Incorporated

Figure 13. Clock and PLL Module

Table 2. PLL Operation

DEVICE OPERATION MODE	PLL_MODE[1:0]	PLL AND CLOCK DETECTOR STATE	INTERRUPT FOR EXTERNAL CLOCK	CLOCK
STANDBY	0h	Disabled	No	Internal RC
ACTIVE	0h	Disabled	No	Internal RC
STANDBY	1h	Enabled	When external clock appears or disappears	Automatic change to external clock when available
ACTIVE	1h	Enabled	When external clock appears or disappears	Automatic change to external clock when available
STANDBY	2h	Disabled	No	Internal RC
ACTIVE	2h	Enabled	When external clock appears or disappears	Automatic change to external clock when available
STANDBY	3h	Reserved		
ACTIVE	3h	Reserved		

8.3.3 Power-Up

The power-up sequence for the LP8752x-Q1 is as follows:

- VANA (and VIN_Bx) reach minimum recommended level (V_{VANA} > $VANA_{UVLO}$).
- NRST is set to high level (or shorted to VANA). This initiates power-on-reset (POR), OTP reading and enables the system I/O interface. The I^2C host must wait at least 1.2 ms before writing or reading data to the LP8752x-Q1.
- Device goes to the STANDBY mode.
- The host can change the default register setting by I^2C if needed.
- The regulator(s) can be enabled/disabled by ENx pin(s) and by I^2C interface.

Copyright © 2018, Texas Instruments Incorporated

8.3.4 Regulator Control

8.3.4.1 Enabling and Disabling Regulators

The regulator(s) can be enabled when the device is in STANDBY or ACTIVE state. There are two ways for enable and disable the regulators:

- Using EN_BUCKx bit in BUCKx_CTRL1 register (EN_PIN_CTRLx register bit is 0h)
- Using EN1, EN2, EN3 control pins (EN_BUCKx bit is 1h AND EN_PIN_CTRLx register bit is 1 in BUCKx_CTRL1 register)

If the EN1, EN2, EN3 control pins are used for enable and disable then the control pin is selected with BUCKx_EN_PIN_SELECT[1:0] bits (in BUCKx_CTRL1 register). The delay from the control signal rising edge to enabling of the regulator is set by BUCKx_STARTUP_DELAY[3:0] bits, and the delay from control signal falling edge to disabling of the regulator is set by BUCKx_SHUTDOWN_DELAY[3:0] bits in BUCKx_DELAY register. The delays are valid only for EN1, EN2, EN3 signal control. The control with EN_BUCKx bit is immediate without the delays.

The control of the regulator (with 0-ms delays) is shown in Table 3.

NOTE

The control of the regulator cannot be changed from one ENx pin to a different ENx pin because the control is ENx signal-edge sensitive. The control from ENx pin to register bit and back to the original ENx pin can be done during operation.

Table 3. Regulator Control

CONTROL METHOD	EN_BUCKx	EN_PIN_CTRLx	BUCKx_EN_PIN_SELECT[1:0]	EN_ROOF_FLOORx	EN1 PIN	EN2 PIN	EN3 PIN	BUCKx OUTPUT VOLTAGE
Enable and disable control with EN_BUCKx bit	0h	Don't Care	Don't Care	Don't Care	Don't Care	Don't Care	Don't Care	Disabled
	1h	0h	Don't Care	Don't Care	Don't Care	Don't Care	Don't Care	BUCKx_VSET[7:0]
Enable and disable control with EN1 pin	1h	1h	0h	0h	Low	Don't Care	Don't Care	Disabled
	1h	1h	0h	0h	High	Don't Care	Don't Care	BUCKx_VSET[7:0]
Enable and disable control with EN2 pin	1h	1h	1h	0h	Don't Care	Low	Don't Care	Disabled
	1h	1h	1h	0h	Don't Care	High	Don't Care	BUCKx_VSET[7:0]
Enable and disable control with EN3 pin	1h	1h	2h	0h	Don't Care	Don't Care	Low	Disabled
	1h	1h	2h	0h	Don't Care	Don't Care	High	BUCKx_VSET[7:0]
Roof and floor control with EN1 pin	1h	1h	0h	1h	Low	Don't Care	Don't Care	BUCKx_FLOOR_VSET[7:0]
	1h	1h	0h	1h	High	Don't Care	Don't Care	BUCKx_VSET[7:0]
Roof and floor control with EN2 pin	1h	1h	1h	1h	Don't Care	Low	Don't Care	BUCKx_FLOOR_VSET[7:0]
	1h	1h	1h	1h	Don't Care	High	Don't Care	BUCKx_VSET[7:0]
Roof and floor control with EN3 pin	1h	1h	2h	1h	Don't Care	Don't Care	Low	BUCKx_FLOOR_VSET[7:0]
	1h	1h	2h	1h	Don't Care	Don't Care	High	BUCKx_VSET[7:0]

The regulator is enabled by the ENx pin or by I^2C writing as shown in Figure 14. The soft-start circuit limits the in-rush current during start-up. When the output voltage rises to 0.35-V level, the output voltage becomes slew-rate controlled. If there is a short circuit at the output and the output voltage does not increase above 0.35-V level in 1 ms, the regulator is disabled, and interrupt is set. When the output voltage reaches the Power-Good threshold level the BUCKx_PG_INT interrupt flag (in INT_BUCK_x register) is set. The Power-Good interrupt flag can be masked using BUCKx_PG_MASK bit (in BUCKx_MASK register).

The ENx input pins have integrated pulldown resistors. The pulldown resistors are enabled by default, and the host can disable those with ENx_PD bits (in CONFIG register).

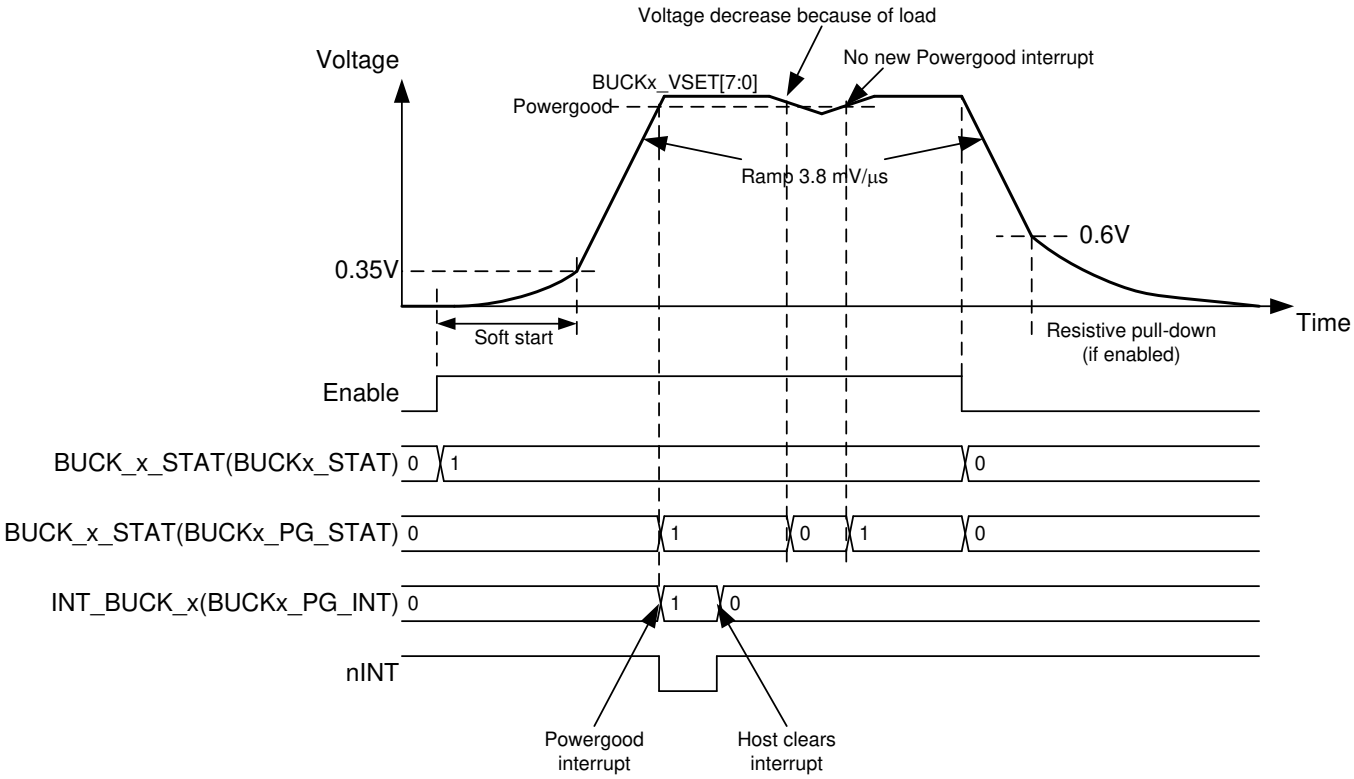

Figure 14. Regulator Enable and Disable

8.3.4.2 Changing Output Voltage

The output voltage of the regulator can be changed by the ENx pin (voltage levels defined by the BUCKx_VOUT and BUCKx_FLOOR_VOUT registers) or by writing to the BUCKx_VOUT and BUCKx_FLOOR_VOUT registers. The voltage change is always slew-rate controlled. During voltage change the forced-PWM mode is used automatically. If the multiphase operation is forced by the BUCKx_FPWM_MP bit (in BUCKx_CTRL1 register), the regulator operates in multiphase mode (two phases in dual-phase configuration, 3 phases in 3-phase configuration, and 4 phases in 4-phase configuration). If the multiphase operation is not forced, the number of phases are added and shedded automatically to follow the required slew rate. When the programmed output voltage is achieved, the mode becomes the one defined by the load current and the BUCKx_FPWM and BUCKx_FPWM_MP bits in BUCKx_CTRL1 register.

The Power-Good interrupt is generated when the output voltage reaches the programmed voltage level, as shown in Figure 15.

Copyright © 2018, Texas Instruments Incorporated

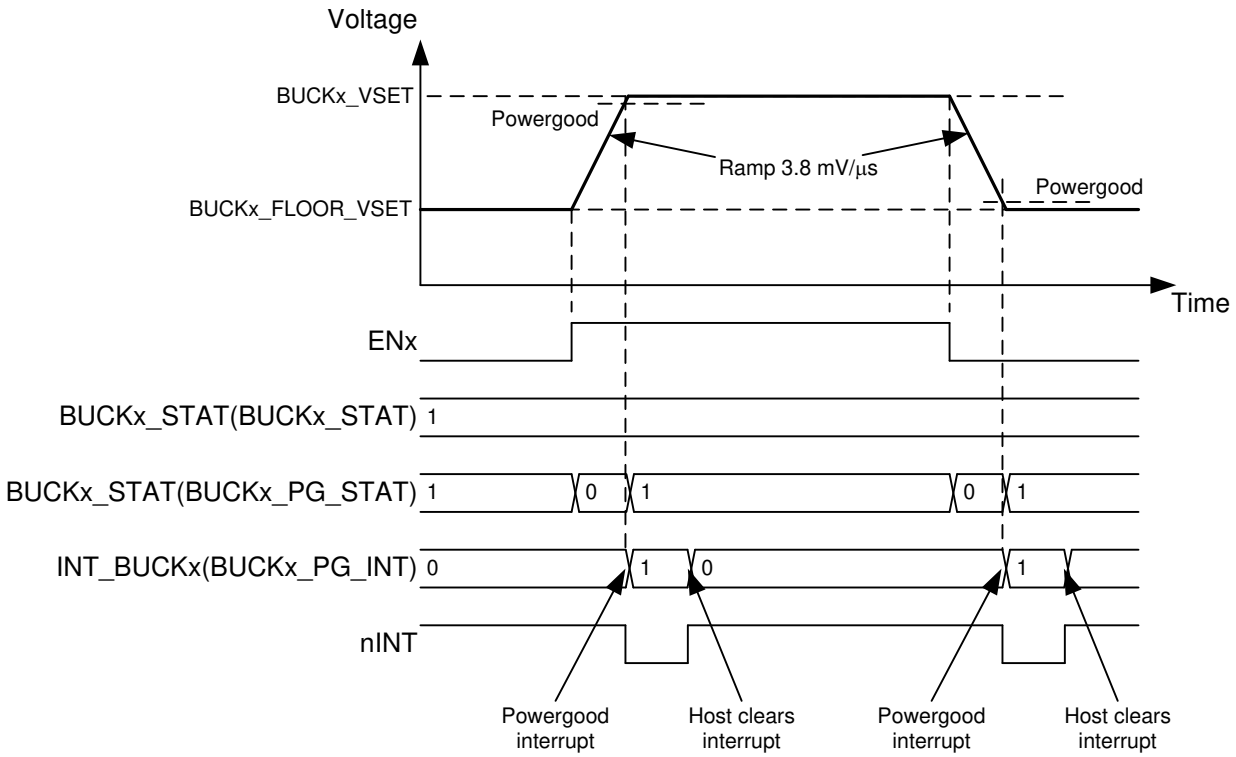

Figure 15. Regulator Output Voltage Change With ENx pin

8.3.5 Enable and Disable Sequences

The LP8752x-Q1 device supports start-up and shutdown sequencing with programmable delays for different regulator outputs using one EN1, EN2, EN3 control signal. The regulator is selected for delayed control with:

- EN_BUCKx = 1 (in BUCKx_CTRL1 register)
- EN_PIN_CTRLx = 1 (in BUCKx_CTRL1 register)
- EN_ROOF_FLOORx = 0 (in BUCKx_CTRL1 register)
- BUCKx_VSET[7:0] = Required voltage when ENx is high (in BUCKx_VOUT register)
- The ENABLE pin for control is selected with BUCKx_EN_PIN_SELECT[1:0] (in BUCKx_CTRL1 register)
- The delay from rising edge of ENx signal to the regulator enable is set by BUCKx_STARTUP_DELAY[3:0] bits (in BUCKx_DELAY register) and
- The delay from falling edge of ENx signal to the regulator disable is set by BUCKx_SHUTDOWN_DELAY[3:0] bits (in BUCKx_DELAY register)

There are four time steps available for start-up and shutdown sequences. The delay times are selected with DOUBLE_DELAY bit in CONFIG register and HALF_DELAY bit in PGOOD_CTRL2 register as shown in Table 4.

Table 4. Start-up and Shutdown Delays

X_STARTUP_DELAY or X_SHUTDOWN_DELAY	DOUBLE_DELAY = 0h HALF_DELAY = 1h	DOUBLE_DELAY = 1h HALF_DELAY = 1h	DOUBLE_DELAY = 0h HALF_DELAY = 0h	DOUBLE_DELAY = 1h HALF_DELAY = 0h
0h	0 ms	0 ms	0 ms	0 ms
1h	0.32 ms	0.64 ms	1 ms	2 ms
2h	0.64 ms	1.28 ms	2 ms	4 ms
3h	0.96 ms	1.92 ms	3 ms	6 ms
4h	1.28 ms	2.56 ms	4 ms	8 ms
5h	1.6 ms	3.2 ms	5 ms	10 ms
6h	1.92 ms	3.84 ms	6 ms	12 ms
7h	2.24 ms	4.48 ms	7 ms	14 ms
8h	2.56 ms	5.12 ms	8 ms	16 ms
9h	2.88 ms	5.76 ms	9 ms	18 ms
Ah	3.2 ms	6.4 ms	10 ms	20 ms
Bh	3.52 ms	7.04 ms	11 ms	22 ms
Ch	3.84 ms	7.68 ms	12 ms	24 ms
dh	4.16 ms	8.32 ms	13 ms	26 ms
Eh	4.48 ms	8.96 ms	14 ms	28 ms
Fh	4.8 ms	9.6 ms	15 ms	30 ms

An example of start-up and shutdown sequences is shown in Figure 16 and Figure 17. The start-up and shutdown delays for the BUCK0, BUCK1 regulators are 1 ms and 4 ms and for the BUCK2, BUCK3 regulators 3 ms and 1 ms. The delay settings are used only for enable/disable control with EN1, EN2, EN3 signals, not for Roof/Floor control.

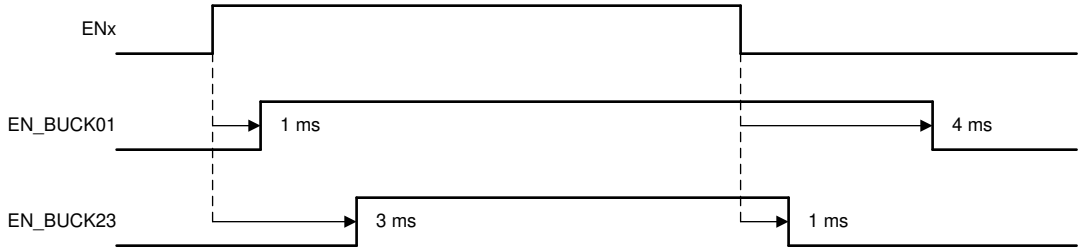

Figure 16. Typical Start-Up and Shutdown Sequencing

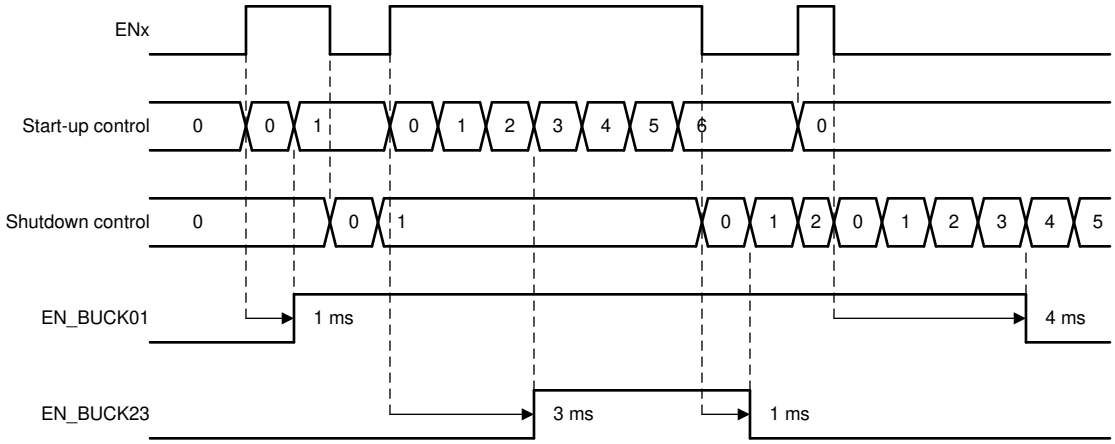

Figure 17. Start-Up and Shutdown Sequencing With Short ENx Low and High Periods

Copyright © 2018, Texas Instruments Incorporated

8.3.6 Device Reset Scenarios

There are three reset methods implemented on the :

- Software reset with SW_RESET register bit (in RESET register)
- POR from rising edge of NRST signal
- Undervoltage lockout (UVLO) reset from VANA supply

An SW reset occurs when SW_RESET bit is written 1. The bit is automatically cleared after writing. This event disables all the regulators immediately, resets all the register bits to the default values, and OTP bits are loaded (see Figure 21). I^2C interface is not reset during software reset. The host must wait at least 1.2 ms after writing an SW reset until making a new I^2C read or write to the device.

If VANA supply voltage falls below UVLO threshold level or NRST signal is set low then all the regulators are disabled immediately, and all the register bits are reset to the default values. When the VANA supply voltage rises above UVLO threshold level AND NRST signal rises above threshold level an internal POR occurs. OTP bits are loaded to the registers and a start-up is initiated according to the register settings. The host must wait at least 1.2 ms after POR until reading or writing to I^2C interface.

8.3.7 Diagnosis and Protection Features

The LP8752x-Q1 is capable of providing four levels of protection features:

- Information of valid regulator output voltage, which sets interrupt or PGOOD signal;
- Warnings for diagnosis, which set interrupt;
- Protection events that are disabling the regulators affected; and
- Faults that are causing the device to shut down.

The LP8752x-Q1 sets the flag bits indicating what protection or warning conditions have occurred, and the nINT pin is pulled low. nINT is released again after a clear of flags is complete. The nINT signal stays low until all the pending interrupts are cleared.

When a fault is detected, it is indicated by a RESET_REG interrupt flag (in INT2_TOP register) after next start-up.

Table 5. Summary of Interrupt Signals

EVENT	RESULT	INTERRUPT REGISTER AND BIT	INTERRUPT MASK	STATUS BIT	RECOVERY/INTERRUPT CLEAR
Current limit triggered (20-µs debounce)	Interrupt	INT_BUCKx = 1 BUCKx_ILIM_INT = 1	BUCKx_ILIM_MASK	BUCKx_ILIM_STAT	Write 1 to BUCKx_ILIM_INT bit Interrupt is not cleared if current limit is active.
Short circuit (V_{VOUT} < 0.35 V at 1 ms after enable) or overload (V_{VOUT} decreasing below 0.35 V during operation, 1 ms debounce)	Regulator disable and interrupt	INT_BUCKx = 1 BUCKx_SC_INT = 1	N/A	N/A	Write 1 to BUCKx_SC_INT bit
Thermal warning	Interrupt	TDIE_WARN = 1	TDIE_WARN_MASK	TDIE_WARN_STAT	Write 1 to TDIE_WARN bit Interrupt is not cleared if temperature is above thermal warning level.
Thermal whutdown	All regulators disabled and Output GPIOx set to low and interrupt.	TDIE_SD = 1	N/A	TDIE_SD_STAT	Write 1 to TDIE_SD bit Interrupt is not cleared if temperature is above thermal shutdown level.
VANA overvoltage ($VANA_{OVP}$)	All regulators disabled and Output GPIOx set to low and interrupt.	INT_OVP	N/A	OVP_STAT	Write 1 to INT_OVP bit Interrupt is not cleared if VANA voltage is above VANA OVP level.
Power Good, output voltage reaches the programmed value	Interrupt	INT_BUCKx = 1 BUCKx_PG_INT = 1	BUCKx_PG_MASK	BUCKx_PG_STAT	Write 1 to BUCKx_PG_INT bit
GPIO	Interrupt	INT_GPIO	GPIO_MASK	GPIO_IN register	Write 1 to INT_GPIO bit
External clock appears or disappears	Interrupt	NO_SYNC_CLK(1)	SYNC_CLK_MASK	SYNC_CLK_STAT	Write 1 to NO_SYNC_CLK bit
Load current measurement ready	Interrupt	I_LOAD_READY = 1	I_LOAD_READY_MASK	N/A	Write 1 to I_LOAD_READY bit

(1) Interrupt is generated during clock detector operation, and in cases where clock is not available when clock detector is enabled.

Copyright © 2018, Texas Instruments Incorporated

Table 5. Summary of Interrupt Signals (continued)

EVENT	RESULT	INTERRUPT REGISTER AND BIT	INTERRUPT MASK	STATUS BIT	RECOVERY/INTERRUPT CLEAR
Start-up (NRST rising edge)	Device ready for operation; registers reset to default values and interrupt.	RESET_REG = 1	RESET_REG_MASK	N/A	Write 1 to RESET_REG bit
Glitch on supply voltage and UVLO triggered (VANA falling and rising)	Immediate shutdown followed by power up; registers reset to default values and interrupt.	RESET_REG = 1	RESET_REG_MASK	N/A	Write 1 to RESET_REG bit
Software requested reset	Immediate shutdown followed by power up; registers reset to default values and interrupt.	RESET_REG = 1	RESET_REG_MASK	N/A	Write 1 to RESET_REG bit

8.3.7.1 Power-Good Information (PGOOD Pin)

In addition to the interrupt based indication of current limit and Power-Good level the LP8752x-Q1 device supports the indication with PGOOD signal. Either voltage-and-current monitoring or a voltage monitoring only can be selected for PGOOD indication. This selection is individual for all buck regulators (select master phase for multiphase regulator) and is set by PGx_SEL[1:0] bits (in PGOOD_CTRL1 register). When both voltage and current are monitored, PGOOD signal active indicates that regulator output is inside the Power-Good voltage window and that load current is below $I_{LIM\ FWD}$. If only voltage is monitored, then the current monitoring is ignored for the PGOOD signal. When a regulator is disabled, the monitoring is automatically masked to prevent it forcing PGOOD inactive. This allows connecting PGOOD signals from various devices together when open-drain outputs are used. When regulator voltage is transitioning from one target voltage to another, the voltage monitoring PGOOD signal is set inactive. The monitoring from all the output rails are combined, and PGOOD is active only if all the sources shows active status. The status from all the voltage rails are summarized in Table 6.

If the PGOOD signal is inactive or it changes the state to inactive, the source for the state can be read from PGOOD_FLT register. During reading all the PGx_FLT bits are cleared that are not driving the PGOOD inactive. When PGOOD signal goes active, the host must read the PGOOD_FLT register to clear all the bits. The PGOOD signal follows the status of all the monitored outputs.

The PGOOD signal can be also configured so that it stays in the inactive state even when the monitored outputs are valid but there are PGx_FLT bits pending clearance in PGOOD_FLT register. This mode of operation is selected by setting EN_PGFLT_STAT bit to 1 (in PGOOD_CTRL2 register).

The type of output voltage monitoring for PGOOD signal is selected by PGOOD_WINDOW bit (in PGOOD_CTRL2 register). If the bit is 0, only undervoltage is monitored; if the bit is 1, both undervoltage and overvoltage are monitored.

The polarity and the output type (push-pull or open-drain) are selected by PGOOD_POL and PGOOD_OD bits in PGOOD_CTRL2 register.

The filtering time for invalid output voltage is always typically 7 µs, and for valid output voltage the filtering time is selected with the PGOOD_SET_DELAY bit (in PGOOD_CTRL2 register). The Power-Good waveforms are shown in Figure 19.

Copyright © 2018, Texas Instruments Incorporated

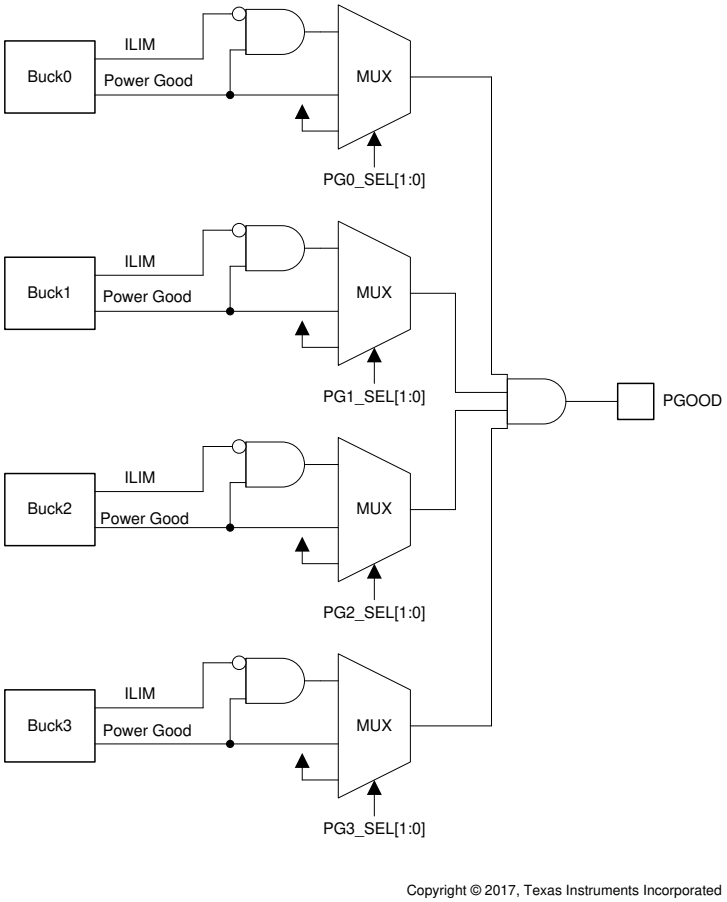

Figure 18. PGOOD Block Diagram

Table 6. PGOOD Operation

STATUS / USE CASE	CONDITION	INPUT TO PGOOD SIGNAL
Buck not selected for PGOOD monitoring	PGx_SEL = 00 (in PGOOD_CTRL1 register)	Active
Buck disabled		Active

Table 6. PGOOD Operation (continued)

STATUS / USE CASE	CONDITION	INPUT TO PGOOD SIGNAL
BUCK SELECTED FOR PGOOD MONITORING		
Buck start-up delay		Inactive
Buck soft start	V_{OUT} < 0.35 V	Inactive
Buck voltage ramp-up	0.35 V < V_{OUT} < V_{SET}	Inactive
Output voltage within window limits after start-up	Must be inside limits longer than debounce time	Active
Output voltage inside voltage window and current limit active	Current limit active longer than debounce time	Active (if only voltage monitoring selected) Inactive (if also current monitoring selected)
Output voltage spikes (overvoltage or undervoltage)	If spikes are outside voltage window longer than debounce time	Inactive
Voltage setting change, output voltage ramp		Inactive
Output voltage within window limits after voltage change	Must be inside limits longer than debounce time	Active
Buck shutdown delay		Active
Buck output voltage ramp down		Active
Buck disabled by thermal shutdown and interrupt pending		Inactive
Buck disabled by overvoltage and interrupt pending		Inactive
Buck disabled by short-circuit detection and interrupt pending		Inactive

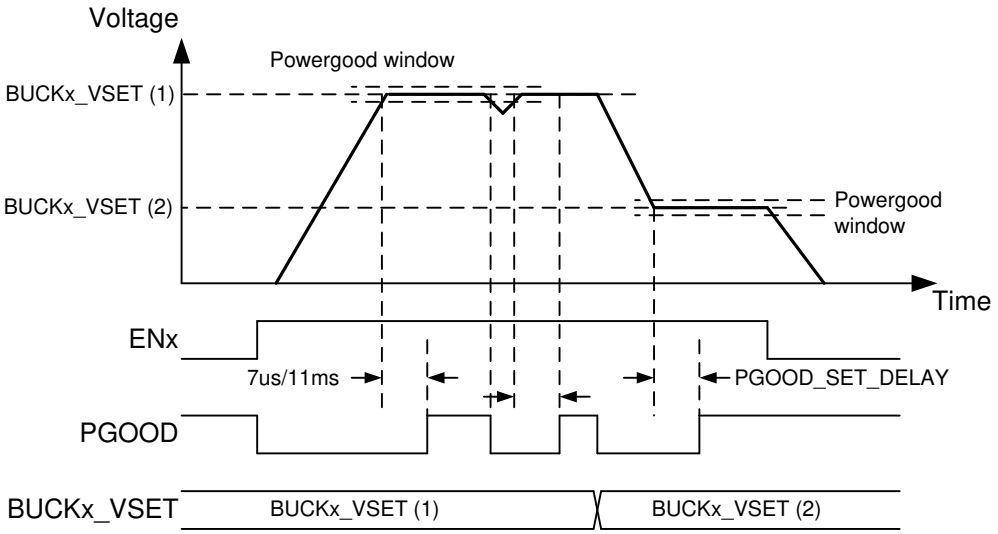

Figure 19. PGOOD Waveforms (PGOOD_POL = 0)

8.3.7.2 Warnings for Diagnosis (Interrupt)

8.3.7.2.1 Output Power Limit

The regulators have output peak current limits. The peak current limits are described in Electrical Charasteristics Table. If the load current is increased so that the current limit is triggered, the regulator continues to regulate to the limit current level (current peak regulation, peak on each switching cycle). The voltage may decrease if the load current is higher than the average output current. If the current regulation continues for 20 µs, the LP8752x-Q1 device sets the BUCKx_ILIM_INT bit (in INT_BUCKx register) and pulls the nINT pin low. The host processor can read BUCKx_ILIM_STAT bits (in BUCKx_STAT register) to see if the regulator is still in peak-current-regulation mode.

Copyright © 2018, Texas Instruments Incorporated

If the load is so high that the output voltage decreases below a 350-mV level, the LP8752x-Q1 device disables the regulator and sets the BUCKx_SC_INT bit (in INT_BUCKx register). In addition the BUCKx_STAT bit (in BUCKx_STAT register) is set to 0. The interrupt is cleared when the host processor writes 1 to BUCKx_SC_INT bit. The overload situation is shown in Figure 20.

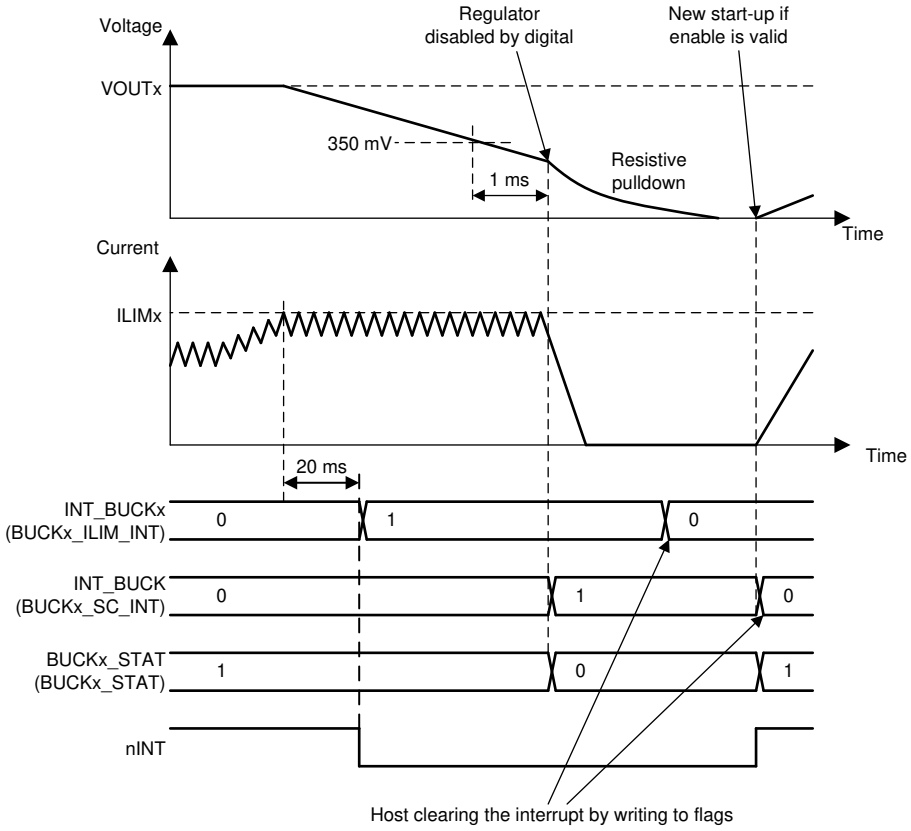

Figure 20. Overload Situation

8.3.7.2.2 Thermal Warning

The LP8752x-Q1 device includes a monitoring feature against overtemperature by setting an interrupt for host processor. The threshold level of the thermal warning is selected with TDIE_WARN_LEVEL bit (in CONFIG register).

If the LP8752x-Q1 device temperature increases above thermal warning level the device sets TDIE_WARN bit (in INT_TOP1 register) and pulls nINT pin low. The status of the thermal warning can be read from TDIE_WARN_STAT bit (in TOP_STAT register), and the interrupt is cleared by writing 1 to TDIE_WARN bit.

8.3.7.3 Protection (Regulator Disable)

If the regulator is disabled because of protection or fault (short-circuit protection, overload protection, thermal shutdown, overvoltage protection, or UVLO), the output power FETs are set to high-impedance mode, and the output pulldown resistor is enabled (if enabled with EN_RDISx bits in BUCKx_CTRL1 register). The turnoff time of the output voltage is defined by the output capacitance, load current, and the resistance of the integrated pulldown resistor. The pulldown resistors are active as long as VANA voltage is above approximately a 1.2-V level.

8.3.7.3.1 Short-Circuit and Overload Protection

A short-circuit protection feature protects the LP8752x-Q1 device itself and its external components against short circuit at the output or against overload during start-up. The fault threshold is 350 mV, the protection is triggered, and the regulator is disabled if the output voltage is below the threshold level of 1 ms after the regulator is enabled.

In a similar way the overload situation is protected during normal operation. If the voltage on the feedback pin of the regulator falls to less than 0.35 V and stays lower the threshold level for 1 ms, the regulator is disabled.

In short-circuit and overload situations the BUCKx_SC_INT (in INT_BUCKx register) and the INT_BUCKx bits (in INT_TOP1 register) are set to 1, the BUCKx_STAT bit (in BUCKx_STAT register) is set to 0, and the nINT signal is pulled low. The host processor clears the interrupt by writing 1 to the BUCKx_SC_INT bit. After clearing the interrupt the regulator makes a new start-up attempt if the regulator is in enabled state.

8.3.7.3.2 Overvoltage Protection

The LP8752x-Q1 device monitors the input voltage from the VANA pin in standby and active operation modes. If the input voltage rises above $VANA_{OVP}$ voltage level, all the regulators are disabled, pulldown resistors discharge the output voltages (if EN_RDISx = 1 in BUCKx_CTRL1 register), GPIOs that are configured to outputs are set to logic low level, nINT signal is pulled low, INT_OVP bit (in INT_TOP1 register) is set to 1, and BUCKx_STAT bits (in BUCK_x_STAT register) are set to 0. The host processor clears the interrupt by writing 1 to the INT_OVP bit. If the input voltage is above the overvoltage detection level the interrupt is not cleared. The host can read the status of the overvoltage from the OVP_STAT bit (in TOP_STAT register). Regulators cannot be enabled as long as the input voltage is above overvoltage detection level or the overvoltage interrupt is pending.

8.3.7.3.3 Thermal Shutdown

The LP8752x-Q1 has an overtemperature protection function that operates to protect the device from short-term misuse and overload conditions. When the junction temperature exceeds around 150°C, the regulators are disabled, the TDIE_SD bit (in INT_TOP1 register) is set to 1, the nINT signal is pulled low, and the device goes to the STANDBY state. The nINT pin is cleared by writing 1h to the TDIE_SD bit. If the temperature is above thermal shutdown level the interrupt is not cleared. The host can read the status of the thermal shutdown from the TDIE_SD_STAT bit (in TOP_STAT register). Regulators cannot be enabled as long as the junction temperature is above thermal shutdown level or the thermal shutdown interrupt is pending.

8.3.7.4 Fault (Power Down)

8.3.7.4.1 Undervoltage Lockout

When the input voltage falls below $VANA_{UVLO}$ at the VANA pin, the buck converters are disabled immediately, and the output capacitors are discharged using the pulldown resistor, and the LP8752x-Q1 device goes to the SHUTDOWN state. When the VANA voltage is greater than the UVLO threshold level and NRST signal is high, the device powers up to STANDBY state.

If the reset interrupt is unmasked by default (RESET_REG_MASK = 0 in TOP_MASK2 register) the RESET_REG interrupt (in INT_TOP2 register) indicates that the device has been in SHUTDOWN. The host processor must clear the interrupt by writing 1 to the RESET_REG bit. If the host processor reads the RESET_REG flag after detecting an nINT low signal, it knows that the input supply voltage has been below UVLO level (or the host has requested reset), and the registers are reset to default values.

Copyright © 2018, Texas Instruments Incorporated

8.3.8 GPIO Signal Operation

The LP8752x-Q1 device supports up to 3 GPIO signals. The GPIO signals are multiplexed with enable signals. The selection between enable and GPIO function is set with GPIOx_SEL bits in PIN_FUNCTION register. The GPIOs are mapped to EN signals so that:

- EN1 is multiplexed with GPIO1
- EN2 is multiplexed with GPIO2
- EN3 is multiplexed with GPIO3

When the pin is selected for GPIO function, additional bits defines how the GPIO operates:

- GPIOx_DIR defines the direction of the GPIO, input or output (GPIO_CONFIG register)
- GPIOx_OD defines the type of the output when the GPIO is set to output, either push-pull with VANA level or open-drain (GPIO_CONFIG register)

When the GPIOx is defined as output, the logic level of the pin is set by GPIOx_OUT bit (in GPIO_OUT register).

When the GPIOx is defined as input, the logic level of the pin can be read from GPIOx_IN bit (in GPIO_IN register).

The control of the GPIOs configured to outputs can be included to start-up and shutdown sequences. The GPIO control for a sequence with ENx signal is selected by EN_PIN_CTRL_GPIOx and EN_PIN_SELECT_GPIOx bits (in PIN_FUNCTION register). The delays during start-up and shutdown are set by GPIOx_STARTUP_DELAY[3:0] and GPIOx_SHUTDOWN_DELAY[3:0] bits (in GPIOx_DELAY register) in the same way as control of the regulators.

The GPIOx signals have a selectable pulldown resistor. The pulldown resistors are selected by ENx_PD bits (in CONFIG register).

NOTE

The control of the GPIOx pin cannot be changed from one ENx pin to a different ENx pin because the control is ENx signal edge sensitive. The control from ENx pin to register bit and back to the original ENx pin can be done during operation.

8.3.9 Digital Signal Filtering

The digital signals have a debounce filtering. The signal/supply is sampled with a clock signal and a counter. This results as an accuracy of one clock period for the debounce window.

Table 7. Digital Signal Filtering

EVENT	SIGNAL/SUPPLY	RISING EDGE DEBOUNCE TIME	FALLING EDGE DEBOUNCE TIME
Enable and disable/voltage select for BUCKx	EN1	3 µs (1)	3 µs (1)
Enable and disable/voltage select for BUCKx	EN2	3 µs (1)	3 µs (1)
Enable and disable/voltage select for BUCKx	EN3	3 µs (1)	3 µs (1)
VANA UVLO	VANA	20 µs (VANA voltage rising)	Immediate (VANA voltage falling)
VANA overvoltage	VANA	20 µs (VANA voltage rising)	20 µs (VANA voltage falling)
Thermal warning	TDIE_WARN	20 µs	20 µs
Thermal shutdown	TDIE_SD	20 µs	20 µs
Current limit	VOUTx_ILIM	20 µs	20 µs
Overload	FB_B0, FB_B1, FB_B2, FB_F3	1 ms	20 µs
Power-good interrupt	FB_B0, FB_B1, FB_B2, FB_F3	20 µs	20 µs
PGOOD pin (voltage monitoring)	PGOOD / FB_B0, FB_B1, FB_B2, FB_F3	4-8 µs (start-up debounce time during start-up)	4 to 8 µs
PGOOD pin (current monitoring)	PGOOD	20 µs	20 µs

(1) No glitch filtering, only synchronization.

8.4 Device Functional Modes

8.4.1 Modes of Operation

SHUTDOWN: The NRST voltage is below threshold level. All switch, reference, control, and bias circuitry of the LP8752x-Q1 device are turned off.

READ OTP: The primary supply voltage VANA is above $VANA_{UVLO}$ level, and NRST voltage is above threshold level. The regulators are disabled, and the reference and bias circuitry of the LP8752x-Q1 are enabled. The OTP bits are loaded to registers.

STANDBY: The primary supply voltage VANA is above $VANA_{UVLO}$ level, and NRST voltage is above threshold level. The regulators are disabled, and the reference, control,and bias circuitry of the LP8752x-Q1 are enabled. All registers can be read or written by the host processor via the system serial interface. The regulators can be enabled if needed.

ACTIVE: The primary supply voltage VANA is above $VANA_{UVLO}$ level, and NRST voltage is above threshold level. At least one regulated DC/DC converter is enabled. All registers can be read or written by the host processor via the system serial interface.

The operating modes and transitions between the modes are shown in Figure 21.

Copyright © 2018, Texas Instruments Incorporated

Device Functional Modes (continued)

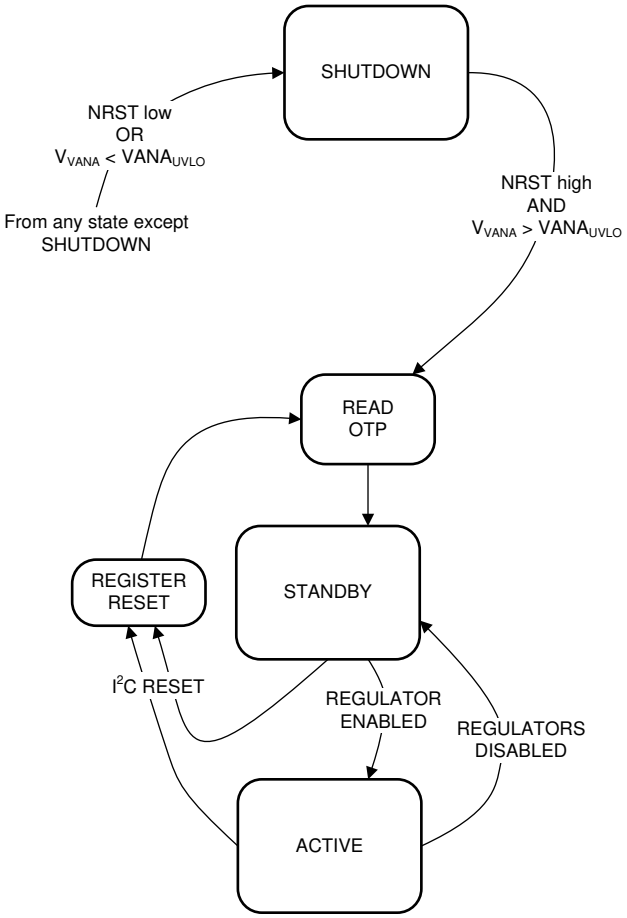

Figure 21. Device Operation Modes

8.5 Programming

8.5.1 I²C-Compatible Interface

The I²C-compatible synchronous serial interface provides access to the programmable functions and registers on the device. This protocol uses a two-wire interface for bidirectional communications between the devices connected to the bus. The two interface lines are the serial data line (SDA), and the serial clock line (SCL). Each device on the bus is assigned a unique address and acts as either a master or a slave depending on whether it generates or receives the serial clock SCL. The SCL and SDA lines must each have a pullup resistor placed somewhere on the line and stays HIGH even when the bus is idle. Note: CLK pin is not used for serial bus data transfer. The LP8752x-Q1 supports standard mode (100 kHz), fast mode (400 kHz), fast mode+ (1 MHz), and high-speed mode (3.4 MHz).

8.5.1.1 Data Validity

The data on the SDA line must be stable during the HIGH period of the clock signal (SCL). In other words, the state of the data line can only be changed when clock signal is LOW.

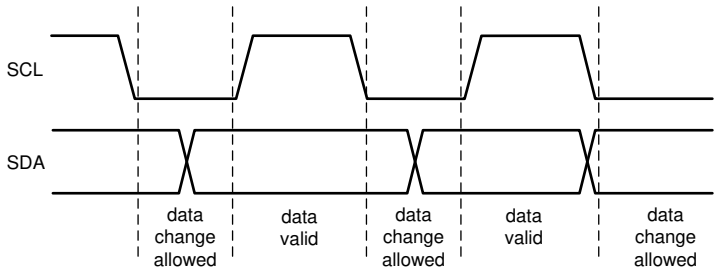

Figure 22. Data Validity Diagram

8.5.1.2 Start and Stop Conditions

The LP8752x-Q1 is controlled via an I²C-compatible interface. START and STOP conditions classify the beginning and end of the I²C session. A START condition is defined as SDA transitions from HIGH to LOW while SCL is HIGH. A STOP condition is defined as SDA transition from LOW to HIGH while SCL is HIGH. The I²C master always generates the START and STOP conditions.

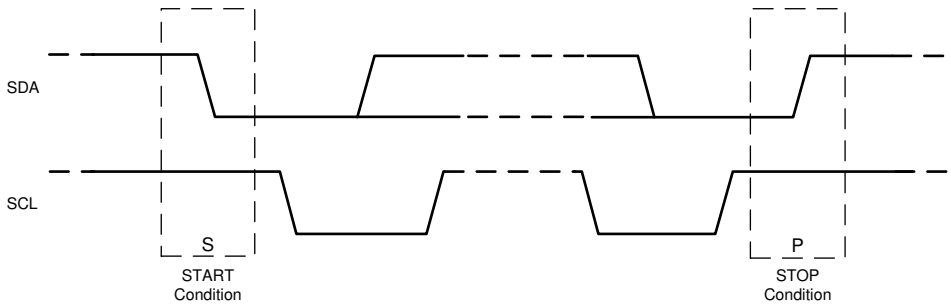

Figure 23. Start and Stop Sequences

The I²C bus is considered busy after a START condition and free after a STOP condition. During data transmission the I²C master can generate repeated START conditions. A START and a repeated START condition are equivalent function-wise. The data on SDA must be stable during the HIGH period of the clock signal (SCL). In other words, the state of SDA can only be changed when SCL is LOW. Figure 24 shows the SDA and SCL signal timing for the I²C-compatible bus.

Copyright © 2018, Texas Instruments Incorporated

Programming (continued)

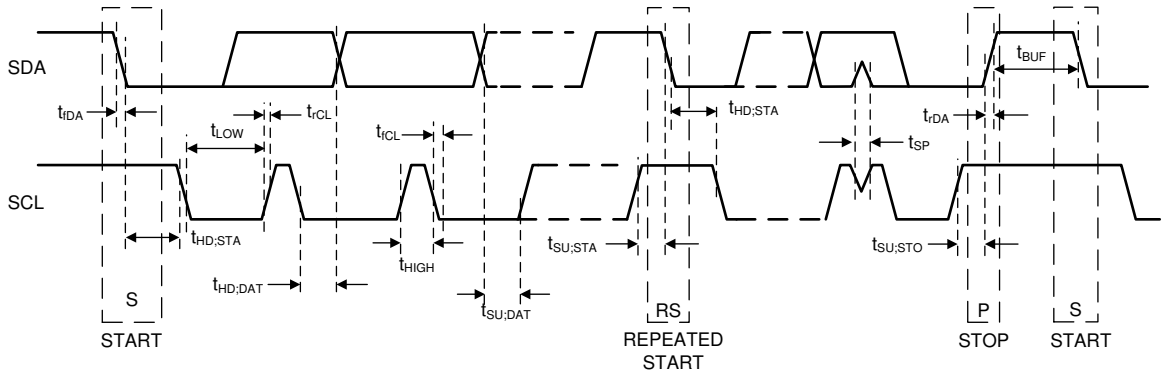

Figure 24. I²C-Compatible Timing

8.5.1.3 Transferring Data

Each byte put on the SDA line must be eight bits long, with the most significant bit (MSB) being transferred first. Each byte of data has to be followed by an acknowledge bit. The acknowledge related clock pulse is generated by the master. The master releases the SDA line (HIGH) during the acknowledge clock pulse. The LP8752x-Q1 pulls down the SDA line during the 9th clock pulse, signifying an acknowledge. The LP8752x-Q1 generates an acknowledge after each byte has been received.

There is one exception to the *acknowledge after each byte* rule. When the master is the receiver, it must indicate to the transmitter an end of data by not-acknowledging (*negative acknowledge*) the last byte clocked out of the slave. This *negative acknowledge* still includes the acknowledge clock pulse (generated by the master), but the SDA line is not pulled down.

NOTE

If the NRST signal is low during I²C communication the LP8752x-Q1 device does not drive SDA line. The ACK signal and data transfer to the master is disabled at that time.

After the START condition, the bus master sends a chip address. This address is seven bits long followed by an eighth bit which is a data direction bit (READ or WRITE). For the eighth bit, a 0 indicates a WRITE, and a 1 indicates a READ. The second byte selects the register to which the data will be written. The third byte contains data to write to the selected register.

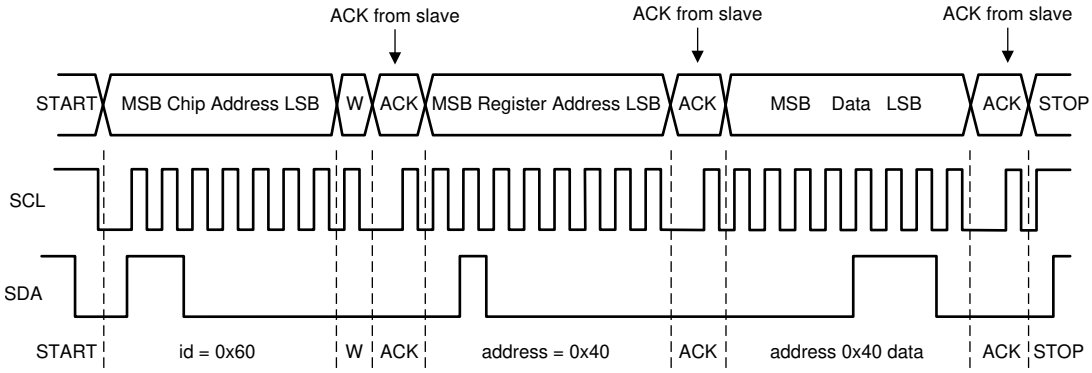

Figure 25. Write Cycle (w = write; SDA = 0), Using Example id = Device Address = 0x60 for LP8752x-Q1

Programming (continued)

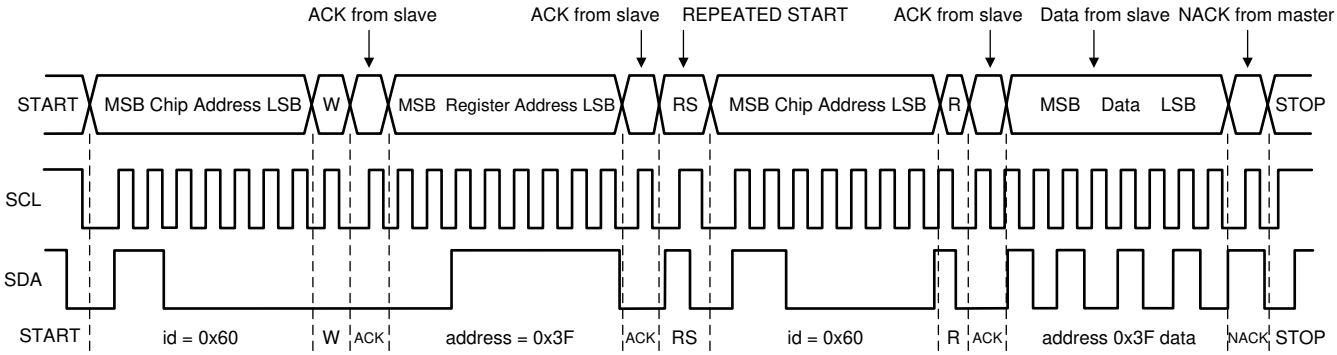

When READ function is to be accomplished, a WRITE function must precede the READ function as shown above.

Figure 26. Read Cycle (r = read; SDA = 1), Using Example id = Device Address = 0x60 for LP8752x-Q1

8.5.1.4 I²C-Compatible Chip Address

NOTE

The device address for the LP8752x-Q1 is defined in the Technical Reference Manual (TRM).

After the START condition, the I²C master sends the 7-bit address followed by an eighth bit, read or write (R/W). R/W = 0 indicates a WRITE, and R/W = 1 indicates a READ. The second byte following the device address selects the register address to which the data will be written. The third byte contains the data for the selected register.

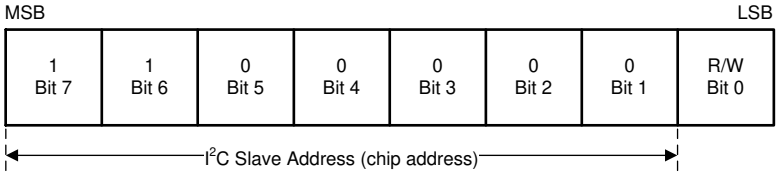

A. Here device address is 1100000Bin = 60Hex.

Figure 27. Example Device Address

8.5.1.5 Auto-Increment Feature

The auto-increment feature allows writing several consecutive registers within one transmission. Each time an 8-bit word is sent to the device, the internal address index counter is incremented by one and the next register is written. Table 8 shows writing sequence to two consecutive registers. Note that auto increment feature does not work for read.

Table 8. Auto-Increment Example

MASTER ACTION	START	DEVICE ADDRESS = 0x60	WRITE		REGISTER ADDRESS		DATA		DATA		STOP
LP8752x-Q1				ACK		ACK		ACK		ACK	

Copyright © 2018, Texas Instruments Incorporated

8.6 Register Maps

8.6.1 Register Descriptions

The LP8752x-Q1 is controlled by a set of registers through the I^2C-compatible interface. The device registers, their addresses, and their abbreviations are listed in Table 9. A more detailed description is given in the *OTP_REV* to *GPIO_OUT* sections.

NOTE

This register map describes the default values for bits that are not read from OTP memory. The orderable code and the default register bit values are defined in part-number specific Technical Reference Manuals.

Table 9. Summary of LP8752x-Q1 Control Registers

Address	Register	Access	D7	D6	D5	D4	D3	D2	D1	D0
0x01	OTP_REV	R	OTP_ID[7:0]							
0x02	BUCK0_CTRL1	R/W	EN_BUCK0	EN_PIN_CTRL0	BUCK0_EN_PINSELECT[1:0]		EN_ROOF_FLOOR0	EN_RDIS0	BUCK0_FPWM	BUCK0_FPWM_MP
0x04	BUCK1_CTRL1	R/W	EN_BUCK1	EN_PIN_CTRL1	BUCK1_EN_PINSELECT[1:0]		EN_ROOF_FLOOR1	EN_RDIS1	BUCK1_FPWM	Reserved
0x06	BUCK2_CTRL1	R/W	EN_BUCK2	EN_PIN_CTRL2	BUCK2_EN_PINSELECT[1:0]		EN_ROOF_FLOOR2	EN_RDIS2	BUCK2_FPWM	BUCK2_FPWM_MP
0x08	BUCK3_CTRL1	R/W	EN_BUCK3	EN_PIN_CTRL3	BUCK3_EN_PIN SELECT[1:0]		EN_ROOF_FLOOR3	EN_RDIS3	BUCK3_FPWM	Reserved
0x0A	BUCK0_VOUT	R/W	BUCK0_VSET[7:0]							
0x0B	BUCK0_FLOOR_VOUT	R/W	BUCK0_FLOOR_VSET[7:0]							
0x0C	BUCK1_VOUT	R/W	BUCK1_VSET[7:0]							
0x0D	BUCK1_FLOOR_VOUT	R/W	BUCK1_FLOOR_VSET[7:0]							
0x0E	BUCK2_VOUT	R/W	BUCK2_VSET[7:0]							
0x0F	BUCK2_FLOOR_VOUT	R/W	BUCK2_FLOOR_VSET[7:0]							
0x10	BUCK3_VOUT	R/W	BUCK3_VSET[7:0]							
0x11	BUCK3_FLOOR_VOUT	R/W	BUCK3_FLOOR_VSET[7:0]							
0x12	BUCK0_DELAY	R/W	BUCK0_SHUTDOWN_DELAY[3:0]				BUCK0_STARTUP_DELAY[3:0]			
0x13	BUCK1_DELAY	R/W	BUCK1_SHUTDOWN_DELAY[3:0]				BUCK1_STARTUP_DELAY[3:0]			
0x14	BUCK2_DELAY	R/W	BUCK2_SHUTDOWN_DELAY[3:0]				BUCK2_STARTUP_DELAY[3:0]			
0x15	BUCK3_DELAY	R/W	BUCK3_SHUTDOWN_DELAY[3:0]				BUCK3_STARTUP_DELAY[3:0]			
0x16	GPIO2_DELAY	R/W	GPIO2_SHUTDOWN_DELAY[3:0]				GPIO2_STARTUP_DELAY[3:0]			
0x17	GPIO3_DELAY	R/W	GPIO3_SHUTDOWN_DELAY[3:0]				GPIO3_STARTUP_DELAY[3:0]			
0x18	RESET	R/W	Reserved							SW_RESET
0x19	CONFIG	R/W	DOUBLE_DELAY	CLKIN_PD	Reserved	EN3_PD	TDIE_WARN_LEVEL	EN2_PD	EN1_PD	Reserved
0x1A	INT_TOP1	R/W	Reserved	INT_BUCK23	INT_BUCK01	NO_SYNC_CLK	TDIE_SD	TDIE_WARN	INT_OVP	I_LOAD_READY
0x1B	INT_TOP2	R/W	Reserved							RESET_REG
0x1C	INT_BUCK_0_1	R/W	Reserved	BUCK1_PG_INT	BUCK1_SC_INT	BUCK1_ILIM_INT	Reserved	BUCK0_PG_INT	BUCK0_SC_INT	BUCK0_ILIM_INT
0x1D	INT_BUCK_2_3	R/W	Reserved	BUCK3_PG_INT	BUCK3_SC_INT	BUCK3_ILIM_INT	Reserved	BUCK2_PG_INT	BUCK2_SC_INT	BUCK2_ILIM_INT
0x1E	TOP_STAT	R	Reserved			SYNC_CLK_STAT	TDIE_SD_STAT	TDIE_WARN_STAT	OVP_STAT	Reserved
0x1F	BUCK_0_1_STAT	R	BUCK1_STAT	BUCK1_PG_STAT	Reserved	BUCK1_ILIM_STAT	BUCK0_STAT	BUCK0_PG_STAT	Reserved	BUCK0_ILIM_STAT
0x20	BUCK_2_3_STAT	R	BUCK3_STAT	BUCK3_PG_STAT	Reserved	BUCK3_ILIM_STAT	BUCK2_STAT	BUCK2_PG_STAT	Reserved	BUCK2_ILIM_STAT

Copyright © 2018, Texas Instruments Incorporated

Table 9. Summary of LP8752x-Q1 Control Registers (continued)

Address	Register	Access	D7	D6	D5	D4	D3	D2	D1	D0
0x21	TOP_MASK1	R/W	Reserved	Reserved		SYNC_CLK_MASK	Reserved	TDIE_WARN_MASK	Reserved	I_LOAD_READY_MASK
0x22	TOP_MASK2	R/W	Reserved							RESET_REG_MASK
0x23	BUCK_0_1_MASK	R/W	Reserved	BUCK1_PG_MASK	Reserved	BUCK1_ILIM_MASK	Reserved	BUCK0_PG_MASK	Reserved	BUCK0_ILIM_MASK
0x24	BUCK_2_3_MASK	R/W	Reserved	BUCK3_PG_MASK	Reserved	BUCK3_ILIM_MASK	Reserved	BUCK2_PG_MASK	Reserved	BUCK2_ILIM_MASK
0x25	SEL_I_LOAD	R/W	Reserved						LOAD_CURRENT_BUCK_SELECT[1:0]	
0x26	I_LOAD_2	R	Reserved						BUCK_LOAD_CURRENT[9:8]	
0x27	I_LOAD_1	R	BUCK_LOAD_CURRENT[7:0]							
0x28	PGOOD_CTRL1	R/W	PG3_SEL[1:0]		PG2_SEL[1:0]		PG1_SEL[1:0]		PG0_SEL[1:0]	
0x29	PGOOD_CTRL2	R/W	HALF_DELAY	EN_PG0_NINT	PGOOD_SET_DELAY	EN_PGFLT_START	Reserved	PGOOD_WINDOW	PGOOD_OD	PGOOD_POL
0x2A	PGOOD_FLT	R					PG3_FLT	PG2_FLT	PG1_FLT	PG0_FLT
0x2B	PLL_CTRL	R/W	PLL_MODE[1:0]		Reserved	EXT_CLK_FREQ[4:0]				
0x2C	PIN_FUNCTION	R/W	EN_SPREAD_SPEC	EN_PIN_CTRL_GPIO3	EN_PIN_SELECT_GPIO3	EN_PIN_CTRL_GPIO2	EN_PIN_SELECT_GPIO2	GPIO3_SEL	GPIO2_SEL	GPIO1_SEL
0x2D	GPIO_CONFIG	R/W	Reserved	GPIO3_OD	GPIO2_OD	GPIO1_OD	Reserved	GPIO3_DIR	GPIO2_DIR	GPIO1_DIR
0x2E	GPIO_IN	R	Reserved					GPIO3_IN	GPIO2_IN	GPIO1_IN
0x2F	GPIO_OUT	R/W	Reserved					GPIO3_OUT	GPIO2_OUT	GPIO1_OUT

Copyright © 2018, Texas Instruments Incorporated

8.6.1.1 OTP_REV

Address: 0x01

D7	D6	D5	D4	D3	D2	D1	D0
OTP_ID[7:0]							

Bits	Field	Type	Default	Description
7:0	OTP_ID[7:0]	R	X	Identification code of the OTP EPROM version

8.6.1.2 BUCK0_CTRL1

Address: 0x02

D7	D6	D5	D4	D3	D2	D1	D0
EN_BUCK0	EN_PIN_CTRL0	BUCK0_EN_PIN_SELECT[1:0]		EN_ROOF_FLOOR0	EN_RDIS0	BUCK0_FPWM	BUCK0_FPWM_MP

Bits	Field	Type	Default	Description
7	EN_BUCK0	R/W	X	This bit enables the BUCK0 regulator 0h = BUCK0 regulator is disabled 1h = BUCK0 regulator is enabled
6	EN_PIN_CTRL0	R/W	X	This bit enables the EN1, EN2, EN3 pin control for the BUCK0 regulator 0h = Only the EN_BUCK0 bit controls the BUCK0 regulator 1h = EN_BUCK0 bit AND ENx pin control the BUCK0 regulator
5:4	BUCK0_EN_PIN_SELECT[1:0]	R/W	X	This bit enables the EN1, EN2, EN3 pin control for the BUCK0 regulator 0h = EN_BUCK0 bit AND EN1 pin control BUCK0 1h = EN_BUCK0 bit AND EN2 pin control BUCK0 2h = EN_BUCK0 bit AND EN3 pin control BUCK0 3h = Reserved
3	EN_ROOF_FLOOR0	R/W	0h	This bit enables the roof and floor control of the EN1, EN2, and EN3 pins if the EN_PIN_CTRL0 bit is set to 1h. 0h = Enable and disable (1/0) control 1h = Roof and floor (1/0) control
2	EN_RDIS0	R/W	1h	This bit enables the output of the discharge resistor when the BUCK0 regulator is disabled 0h = Discharge resistor disabled 1h = Discharge resistor enabled
1	BUCK0_FPWM	R/W	X	This bit forces the BUCK0 regulator to operate in PWM mode 0h = Automatic transitions between PFM and PWM modes (AUTO mode). 1h = Forced to PWM operation
0	BUCK0_FPWM_MP	R/W	X	This bit forces the BUCK0 regulator to operate always in multiphase and forced-PWM operation mode 0h = Automatic phase adding and shedding 1h = Forced to multiphase operation; two phases in the 2-phase configuration, three phases in the 3-phase configuration, and four phases in the 4-phase configuration.

Copyright © 2018, Texas Instruments Incorporated

8.6.1.3 BUCK1_CTRL1

Address: 0x04

D7	D6	D5	D4	D3	D2	D1	D0
EN_BUCK1	EN_PIN_CTRL1	BUCK1_EN_PIN_SELECT[1:0]		EN_ROOF_FLOOR1	EN_RDIS1	BUCK1_FPWM	Reserved

Bits	Field	Type	Default	Description
7	EN_BUCK1	R/W	X	This bit enables the BUCK1 regulator 0h = BUCK1 regulator is disabled 1h = BUCK1 regulator is enabled
6	EN_PIN_CTRL1	R/W	X	This bit enables the EN1, EN2, EN3 pin control for the BUCK1 regulator 0h = Only the EN_BUCK1 bit controls the BUCK1 regulator 1h = EN_BUCK1 bit AND ENx pin control the BUCK1 regulator
5:4	BUCK1_EN_PIN_SELECT[1:0]	R/W	X	This bit enables the EN1, EN2, EN3 pin control for BUCK1 regulator 0h = EN_BUCK1 bit AND EN1 pin control the BUCK1 regulator 1h = EN_BUCK1 bit AND EN2 pin control the BUCK1 regulator 2h = EN_BUCK1 bit AND EN3 pin control the BUCK1 regulator 3h = Reserved
3	EN_ROOF_FLOOR1	R/W	0h	This bit enables the roof and floor control of EN1, EN2, EN3 pin if the EN_PIN_CTRL1 bit is set to 1h. 0h = Enable and disable (1/0) control 1h = Roof and floor (1/0) control
2	EN_RDIS1	R/W	1h	This bit enables the output discharge resistor when the BUCK1 regulator is disabled. 0h = Discharge resistor disabled 1h = Discharge resistor enabled
1	BUCK1_FPWM	R/W	X	This bit forces the BUCK1 regulator to operate in PWM mode. 0h = Automatic transitions between PFM and PWM modes (AUTO mode). 1h = Forced to PWM operation
0	Reserved	R/W	0h	

8.6.1.4 BUCK2_CTRL1

Address: 0x06

D7	D6	D5	D4	D3	D2	D1	D0
EN_BUCK2	EN_PIN_CTRL2	BUCK2_EN_PIN_SELECT[1:0]		EN_ROOF_FLOOR2	EN_RDIS2	BUCK2_FPWM	BUCK2_FPWM_MP

Bits	Field	Type	Default	Description
7	EN_BUCK2	R/W	X	This bit enables the BUCK2 regulator. 0h = BUCK2 regulator is disabled 1h = BUCK2 regulator is enabled
6	EN_PIN_CTRL2	R/W	X	This bit enables the EN1, EN2, EN3 pin control for the BUCK2 regulator. 0h = Only the EN_BUCK2 bit controls BUCK2 1h = EN_BUCK2 bit AND ENx pin control BUCK2
5:4	BUCK2_EN_PIN_SELECT[1:0]	R/W	X	This bit enables the EN1, EN2, EN3 pin control for the BUCK2 regulator. 0h = EN_BUCK2 bit AND EN1 pin control the BUCK2 regulator 1h = EN_BUCK2 bit AND EN2 pin control the BUCK2 regulator 2h = EN_BUCK2 bit AND EN3 pin control the BUCK2 regulator 3h = Reserved
3	EN_ROOF_FLOOR2	R/W	0h	This bit enables the roof and floor control of EN1, EN2, EN3 pin if the EN_PIN_CTRL2 bit is set to 1h. 0h = Enable and disable (1/0) control 1h = Roof and floor (1/0) control
2	EN_RDIS2	R/W	1h	Enable output discharge resistor when BUCK2 is disabled. 0h = Discharge resistor disabled 1h = Discharge resistor enabled
1	BUCK2_FPWM	R/W	X	This bit forces the BUCK2 regulator to operate in PWM mode. 0h = Automatic transitions between PFM and PWM modes (AUTO mode) 1h = Forced to PWM operation
0	BUCK2_FPWM_MP	R/W	X	This bit forces the BUCK2 regulator to operate always in multiphase and forced-PWM operation mode. 0h = Automatic phase adding and phase shedding 1h = Forced to multiphase operation; two phases in the 2-phase configuration

Copyright © 2018, Texas Instruments Incorporated

8.6.1.5 BUCK3_CTRL1

Address: 0x08

D7	D6	D5	D4	D3	D2	D1	D0
EN_BUCK3	EN_PIN_CTRL3	BUCK3_EN_PIN_SELECT[1:0]		EN_ROOF_FLOOR3	EN_RDIS3	BUCK3_FPWM	Reserved

Bits	Field	Type	Default	Description
7	EN_BUCK3	R/W	X	This bit enables the BUCK3 regulator. 0h = BUCK3 regulator is disabled 1h = BUCK3 regulator is enabled
6	EN_PIN_CTRL3	R/W	X	This bit enables the EN1, EN2, EN3 pin control for the BUCK3 regulator. 0h = Only the EN_BUCK3 bit controls the BUCK3 regulator 1h = EN_BUCK3 bit AND ENx pin control the BUCK3 regulator
5:4	BUCK3_EN_PIN_SELECT[1:0]	R/W	X	This bit enables the EN1, EN2, EN3 pin control for the BUCK3 regulator. 0h = EN_BUCK3 bit AND EN1 pin control the BUCK3 regulator 1h = EN_BUCK3 bit AND EN2 pin control the BUCK3 regulator 2h = EN_BUCK3 bit AND EN3 pin control the BUCK3 regulator 3h = Reserved
3	EN_ROOF_FLOOR3	R/W	0h	This bit enables the roof and floor control of EN1, EN2, EN3 pin if the EN_PIN_CTRL3 bit is set to 1h. 0h = Enable and disable (1/0) control 1h = Roof and floor (1/0) control
2	EN_RDIS3	R/W	1h	This bit enables the output discharge resistor when the BUCK3 regulator is disabled. 0h = Discharge resistor disabled 1h = Discharge resistor enabled
1	BUCK3_FPWM	R/W	X	This bit forces the BUCK3 regulator to operate in PWM mode. 0h = Automatic transitions between PFM and PWM modes (AUTO mode) 1h = Forced to PWM operation
0	Reserved	R/W	0h	

8.6.1.6 BUCK0_VOUT

Address: 0x0A

D7	D6	D5	D4	D3	D2	D1	D0
BUCK0_VSET[7:0]							

Bits	Field	Type	Default	Description
7:0	BUCK0_VSET[7:0]	R/W	X	This bit sets the output voltage of the BUCK0 regulator. **Reserved, do not use** 0h to 9h **0.6 V to 0.73 V, 10-mV steps** Ah = 0.6 V ... 17h = 0.73 V **0.73 V to 1.4 V, 5-mV steps** 18h = 0.735 V ... 9Dh = 1.4 V **1.4 V to 3.36 V, 20-mV steps** 9Eh = 1.42 V ... FFh = 3.36 V

8.6.1.7 BUCK0_FLOOR_VOUT

Address: 0x0B

D7	D6	D5	D4	D3	D2	D1	D0
BUCK0_FLOOR_VSET[7:0]							

Bits	Field	Type	Default	Description
7:0	BUCK0_FLOOR_VSET[7:0]	R/W	0h	This bit sets the output voltage of the BUCK0 regulator when the floor state is used. **Reserved, do not use** 0h to 9h **0.6 V to 0.73 V, 10-mV steps** Ah = 0.6 V ... 17h = 0.73 V **0.73 V to 1.4 V, 5-mV steps** 18h = 0.735 V ... 9Dh = 1.4 V **1.4 V to 3.36 V, 20-mV steps** 9Eh = 1.42 V ... FFh = 3.36 V

8.6.1.8 BUCK1_VOUT

Address: 0x0C

D7	D6	D5	D4	D3	D2	D1	D0
BUCK1_VSET[7:0]							

Copyright © 2018, Texas Instruments Incorporated

Bits	Field	Type	Default	Description
7:0	BUCK1_VSET[7:0]	R/W	X	This bit sets the output voltage of the BUCK1 regulator. **Reserved, do not use** 0h to 9h **0.6 V - 0.73 V, 10-mV steps** Ah = 0.6 V ... 17h = 0.73 V **0.73 V - 1.4 V, 5-mV steps** 18h = 0.735 V ... 9Dh = 1.4 V **1.4 V - 3.36 V, 20-mV steps** 9Eh = 1.42 V ... FFh = 3.36 V

8.6.1.9 BUCK1_FLOOR_VOUT

Address: 0x0D

D7	D6	D5	D4	D3	D2	D1	D0
BUCK1_FLOOR_VSET[7:0]							

Bits	Field	Type	Default	Description
7:0	BUCK1_FLOOR_VSET[7:0]	R/W	0h	This bit sets the output voltage of the BUCK1 regulator when the floor state is used. **Reserved, do not use** 0h to 9h **0.6 V to 0.73 V, 10-mV steps** Ah = 0.6 V ... 17h = 0.73 V **0.73 V to 1.4 V, 5-mV steps** 18h = 0.735 V ... 9Dh = 1.4 V **1.4 V to 3.36 V, 20-mV steps** 9Eh = 1.42 V ... FFh = 3.36 V

8.6.1.10 BUCK2_VOUT

Address: 0x0E

D7	D6	D5	D4	D3	D2	D1	D0
BUCK2_VSET[7:0]							

Bits	Field	Type	Default	Description
7:0	BUCK2_VSET[7:0]	R/W	X	This bit sets the output voltage of the BUCK2 regulator. **Reserved, do not use** 0h to 9h **0.6 V to 0.73 V, 10-mV steps** Ah = 0.6V ... 17h = 0.73 V **0.73 V to 1.4 V, 5-mV steps** 18h = 0.735 V ... 9Dh = 1.4 V **1.4 V to 3.36 V, 20-mV steps** 9Eh = 1.42 V ... FFh = 3.36 V

8.6.1.11 BUCK2_FLOOR_VOUT

Address: 0x0F

D7	D6	D5	D4	D3	D2	D1	D0
BUCK2_FLOOR_VSET[7:0]							

Bits	Field	Type	Default	Description
7:0	BUCK2_FLOOR_VSET[7:0]	R/W	0h	This bit sets the output voltage of the BUCK2 regulator when the floor state is used. **Reserved, do not use** 0h to 9h **0.6 V to 0.73 V, 10-mV steps** Ah = 0.6 V ... 17h = 0.73 V **0.73 V to 1.4 V, 5-mV steps** 18h = 0.735 V ... 9Dh = 1.4 V **1.4 V to 3.36 V, 20-mV steps** 9Eh = 1.42 V ... FFh = 3.36 V

8.6.1.12 BUCK3_VOUT

Address: 0x10

D7	D6	D5	D4	D3	D2	D1	D0
BUCK3_VSET[7:0]							

Bits	Field	Type	Default	Description
7:0	BUCK3_VSET[7:0]	R/W	X	This bit sets the output voltage of the BUCK3 regulator. **Reserved, do not use** 0h to 9h **0.6 V to 0.73 V, 10-mV steps** Ah = 0.6 V ... 17h = 0.73 V **0.73 V to 1.4 V, 5-mV steps** 18h = 0.735 V ... 9Dh = 1.4 V **1.4 V to 3.36 V, 20-mV steps** 9Eh = 1.42 V ... FFh = 3.36 V

8.6.1.13 BUCK3_FLOOR_VOUT

Address: 0x11

D7	D6	D5	D4	D3	D2	D1	D0
BUCK3_FLOOR_VSET[7:0]							

Copyright © 2018, Texas Instruments Incorporated

Bits	Field	Type	Default	Description
7:0	BUCK3_FLOOR_VSET[7:0]	R/W	0h	This bit sets the output voltage of the BUCK3 regulator when the floor state is used. **Reserved, do not use** 0h to 9h **0.6 V to 0.73 V, 10-mV steps** Ah = 0.6 V ... 17h = 0.73 V **0.73 V to 1.4 V, 5-mV steps** 18h = 0.735 V ... 9Dh = 1.4 V **1.4 V to 3.36 V, 20-mV steps** 9Eh = 1.42 V ... FFh = 3.36 V

8.6.1.14 BUCK0_DELAY

Address: 0x12

D7	D6	D5	D4	D3	D2	D1	D0
BUCK0_SHUTDOWN_DELAY[3:0]				BUCK0_STARTUP_DELAY[3:0]			

Bits	Field	Type	Default	Description
7:4	BUCK0_SHUTDOWN_DELAY[3:0]	R/W	X	Shutdown delay of the BUCK0 regulator from the falling edge of the ENx signal (the DOUBLE_DELAY bit is set to 0h in the CONFIG register and the HALF_DELAY bit is set to 0h in the PGOOD_CTRL2 register). For other delay options, see the *Start-Up and Shutdown Delays* table. 0h = 0 ms 1h = 1 ms Fh = 15 ms
3:0	BUCK0_STARTUP_DELAY[3:0]	R/W	X	Start-up delay the of the BUCK0 regulator from the rising edge of the ENx signal (the DOUBLE_DELAY bit is set to 0h in the CONFIG register and the HALF_DELAY bit is set to 0h in the PGOOD_CTRL2 register). For other delay options, see the *Start-Up and Shutdown Delays* table. 0h = 0 ms 1h = 1 ms Fh = 15 ms

8.6.1.15 BUCK1_DELAY

Address: 0x13

D7	D6	D5	D4	D3	D2	D1	D0
BUCK1_SHUTDOWN_DELAY[3:0]				BUCK1_STARTUP_DELAY[3:0]			

Bits	Field	Type	Default	Description
7:4	BUCK1_SHUTDOWN_DELAY[3:0]	R/W	X	Shutdown delay of the BUCK1 regulator from the falling edge of the ENx signal (the DOUBLE_DELAY bit is set to 0h in the CONFIG register and the HALF_DELAY bit is set to 0h in the PGOOD_CTRL2 register). For other delay options, see the *Start-Up and Shutdown Delays* table. 0h = 0 ms 1h = 1 ms Fh = 15 ms
3:0	BUCK1_STARTUP_DELAY[3:0]	R/W	X	start-up delay of the BUCK1 regulator from the rising edge of the ENx signal (the DOUBLE_DELAY bit is set to 0h in the CONFIG register and the HALF_DELAY bit is set to 0h in the PGOOD_CTRL2 register). For other delay options, see the *Start-Up and Shutdown Delays* table. 0h = 0 ms 1h = 1 ms Fh = 15 ms

Copyright © 2018, Texas Instruments Incorporated

8.6.1.16 BUCK2_DELAY

Address: 0x14

D7	D6	D5	D4	D3	D2	D1	D0
BUCK2_SHUTDOWN_DELAY[3:0]				BUCK2_STARTUP_DELAY[3:0]			

Bits	Field	Type	Default	Description
7:4	BUCK2_SHUTDOWN_DELAY[3:0]	R/W	X	Shutdown delay of the BUCK2 regulator from the falling edge of the ENx signal (the DOUBLE_DELAY bit is set to 0h in the CONFIG register and the HALF_DELAY bit is set to 0h in the PGOOD_CTRL2 register). For other delay options, see the *Start-Up and Shutdown Delays* table. 0h = 0 ms 1h = 1 ms ... Fh = 15 ms (Default from OTP memory)
3:0	BUCK2_STARTUP_DELAY[3:0]	R/W	X	start-up delay of the BUCK2 regulator from the rising edge of the ENx signal (the DOUBLE_DELAY bit is set to 0h in the CONFIG register and the HALF_DELAY bit is set to 0h in the PGOOD_CTRL2 register). For other delay options, see the *Start-Up and Shutdown Delays* table. 0h = 0 ms 1h = 1 ms Fh = 15 ms

Copyright © 2018, Texas Instruments Incorporated

8.6.1.17 BUCK3_DELAY

Address: 0x15

D7	D6	D5	D4	D3	D2	D1	D0
BUCK3_SHUTDOWN_DELAY[3:0]				BUCK3_STARTUP_DELAY[3:0]			

Bits	Field	Type	Default	Description
7:4	BUCK3_SHUTDOWN_DELAY[3:0]	R/W	X	Shutdown delay of the BUCK3 regulator from the falling edge of the ENx signal (the DOUBLE_DELAY bit is set to 0h in the CONFIG register and the HALF_DELAY bit is set to 0h in the PGOOD_CTRL2 register). For other delay options, see the *Start-Up and Shutdown Delays* table. 0h = 0 ms 1h = 1 ms Fh = 15 ms
3:0	BUCK3_STARTUP_DELAY[3:0]	R/W	X	Startup delay of the BUCK3 regulator from the rising edge of the ENx signal (the DOUBLE_DELAY bit is set to 0h in the CONFIG register and the HALF_DELAY bit is set to 0h in the PGOOD_CTRL2 register). For other delay options, see the *Start-Up and Shutdown Delays* table. 0h = 0 ms 1h = 1 ms Fh = 15 ms

8.6.1.18 GPIO2_DELAY

Address: 0x16

D7	D6	D5	D4	D3	D2	D1	D0
GPIO2_SHUTDOWN_DELAY[3:0]				GPIO2_STARTUP_DELAY[3:0]			

Bits	Field	Type	Default	Description
7:4	GPIO2_SHUTDOWN_DELAY[3:0]	R/W	X	Delay for the GPIO2 falling edge from the falling edge of the ENx signal (the DOUBLE_DELAY bit is set to 0h in the CONFIG register and the HALF_DELAY bit is set to 0h in the PGOOD_CTRL2 register). For other delay options, see the *Start-Up and Shutdown Delays* table. 0h = 0 ms 1h = 1 ms Fh = 15 ms
3:0	GPIO2_STARTUP_DELAY[3:0]	R/W	X	Delay for the GPIO2 rising edge from the rising edge of the ENx signal (the DOUBLE_DELAY bit is set to 0h in the CONFIG register and the HALF_DELAY bit is set to 0h in the PGOOD_CTRL2 register). For other delay options, see the *Start-Up and Shutdown Delays* table. 0h = 0 ms 1h = 1 ms Fh = 15 ms

8.6.1.19 GPIO3_DELAY

Address: 0x17

D7	D6	D5	D4	D3	D2	D1	D0
GPIO3_SHUTDOWN_DELAY[3:0]				GPIO3_STARTUP_DELAY[3:0]			

Bits	Field	Type	Default	Description
7:4	GPIO3_SHUTDOWN_DELAY[3:0]	R/W	X	Delay for the GPIO3 falling edge from the falling edge of the ENx signal (the DOUBLE_DELAY bit is set to 0h in the CONFIG register and the HALF_DELAY bit is set to 0h in the PGOOD_CTRL2 register). For other delay options, see the *Start-Up and Shutdown Delays* table. 0h = 0 ms 1h = 1 ms Fh = 15 ms

Bits	Field	Type	Default	Description
3:0	GPIO3_STARTUP _DELAY[3:0]	R/W	X	Delay for GPIO3 rising edge from rising edge of ENx signal (the DOUBLE_DELAY bit is set to 0h in the CONFIG register and the HALF_DELAY bit is set to 0h in the PGOOD_CTRL2 register). For other delay options, see the *Start-Up and Shutdown Delays* table. 0h = 0 ms 1h = 1 ms . Fh = 15 ms

8.6.1.20 RESET

Address: 0x18

D7	D6	D5	D4	D3	D2	D1	D0
Reserved							SW_RESET

Bits	Field	Type	Default	Description
7:1	Reserved	R/W	0h	
0	SW_RESET	R/W	0h	Software commanded reset. When this bit is written to 1h, the registers are reset to the default values, OTP memory is read, and the I^2C interface is reset. The bit is automatically cleared.

8.6.1.21 CONFIG

Address: 0x19

D7	D6	D5	D4	D3	D2	D1	D0
DOUBLE_DEL AY	CLKIN_PD	Reserved	EN3_PD	TDIE_WARN_ LEVEL	EN2_PD	EN1_PD	Reserved

Bits	Field	Type	Default	Description
7	DOUBLE_DELAY	R/W	X	Start-up and shutdown delays from the ENx signals 0h = 0 ms to 15 ms with 1-ms steps 1h = 0 ms to 30 ms with 2-ms steps
6	CLKIN_PD	R/W	X	This bit selects the pulldown resistor on the CLKIN input pin. 0h = Pulldown resistor is disabled 1h = Pulldown resistor is enabled
5	Reserved	R/W	0h	
4	EN3_PD	R/W	X	This bit selects the pulldown resistor on the EN3 (GPIO3) input pin. 0h = Pulldown resistor is disabled 1h = Pulldown resistor is enabled
3	TDIE_WARN_LEV EL	R/W	X	Thermal warning threshold level 0h = 125°C 1h = 137°C
2	EN2_PD	R/W	X	This bit selects the pulldown resistor on the EN2 (GPIO2) input pin. 0h = Pulldown resistor is disabled 1h = Pulldown resistor is enabled
1	EN1_PD	R/W	X	This bit selects the pulldown resistor on the EN1 (GPIO1) input pin. 0h = Pulldown resistor is disabled 1h = Pulldown resistor is enabled
0	Reserved	R/W	0h	

8.6.1.22 INT_TOP1

Address: 0x1A

D7	D6	D5	D4	D3	D2	D1	D0
Reserved	INT_BUCK23	INT_BUCK01	NO_SYNC_CL K	TDIE_SD	TDIE_WARN	INT_OVP	I_LOAD_ READY

Copyright © 2018, Texas Instruments Incorporated

Bits	Field	Type	Default	Description
7	Reserved	R/W	0h	
6	INT_BUCK23	R	0h	Interrupt indicating that the output of the BUCK3 regulator,BUCK2 regulator, or both regulators has a pending interrupt. The reason for the interrupt is indicated in the INT_BUCK_2_3 register. This bit is cleared automatically when the INT_BUCK_2_3 register is cleared to 0x00.
5	INT_BUCK01	R	0h	Interrupt indicating that the output of the BUCK1 regulator, BUCK0 regulator, or both regulators has a pending interrupt. The reason for the interrupt is indicated in the INT_BUCK_0_1 register. This bit is cleared automatically when the INT_BUCK_0_1 register is cleared to 0x00.
4	NO_SYNC_CLK	R/W1C	0h	Latched status bit indicating that the external clock is not valid. Write this bit to 1h to clear the interrupt.
3	TDIE_SD	R/W1C	0h	Latched status bit indicating that the die junction temperature is greater than the thermal shutdown level. The regulators are disabled if previously enabled. The regulators cannot be enabled if this bit is active. The actual status of the thermal warning condition is indicated by the TDIE_SD_STAT bit in the TOP_STAT register. Write this bit to 1h to clear the interrupt.
2	TDIE_WARN	R/W1C	0h	Latched status bit indicating that the die junction temperature is greater than the thermal warning level. The actual status of the thermal warning condition is indicated by the TDIE_WARN_STAT bit in the TOP_STAT register. Write this bit to 1h to clear the interrupt.
1	INT_OVP	R/W1C	0h	Latched status bit indicating that the input voltage is greater than the overvoltage-detection level. The actual status of the overvoltage condition is indicated by the OVP_STAT bit in the OP_STAT register. Write this bit to 1h to clear the interrupt.
0	I_LOAD_READY	R/W1C	0h	Latched status bit indicating that the load-current measurement result is available in the I_LOAD_1 and I_LOAD_2 registers. Write this bit to 1h to clear the interrupt.

8.6.1.23 INT_TOP2

Address: 0x1B

D7	D6	D5	D4	D3	D2	D1	D0
Reserved							RESET_REG

Bits	Field	Type	Default	Description
7:1	Reserved	R/W	0h	
0	RESET_REG	R/W1C	0h	Latched status bit indicating that either start-up (NRST rising edge) is done, VANA supply voltage is less than the undervoltage threshold level, or the host has requested a reset (the SW_RESET bit in the RESET register). The regulators are disabled, the registers are reset to default values, and the normal start-up procedure is done. Write this bit to 1h to clear the interrupt.

8.6.1.24 INT_BUCK_0_1

Address: 0x1C

D7	D6	D5	D4	D3	D2	D1	D0
Reserved	BUCK1_PG_INT	BUCK1_SC_INT	BUCK1_ILIM_INT	Reserved	BUCK0_PG_INT	BUCK0_SC_INT	BUCK0_ILIM_INT

Bits	Field	Type	Default	Description
7	Reserved	R/W	0h	
6	BUCK1_PG_INT	R/W1C	0h	Latched status bit indicating that the BUCK1 output voltage reached the power-good-threshold level. Write this bit to 1h to clear.
5	BUCK1_SC_INT	R/W1C	0h	Latched status bit indicating that the BUCK1 output voltage has fallen to less than the 0.35-V level during operation or the BUCK1 output did not reach the 0.35-V level in 1 ms from enable. Write this bit to 1h to clear.

Bits	Field	Type	Default	Description
4	BUCK1_ILIM_INT	R/W1C	0h	Latched status bit indicating that output current limit is active. Write this bit to 1h to clear.
3	Reserved	R/W	0h	
2	BUCK0_PG_INT	R/W1C	0h	Latched status bit indicating that the BUCK0 output voltage reached power-good-threshold level. Write this bit to 1h to clear.
1	BUCK0_SC_INT	R/W1C	0h	Latched status bit indicating that the BUCK0 output voltage has fallen to less than the 0.35-V level during operation or the BUCK0 output did not reach the 0.35-V level in 1 ms from enable. Write this bit to 1h to clear.
0	BUCK0_ILIM_INT	R/W1C	0h	Latched status bit indicating that output current limit is active. Write this bit to 1h to clear.

8.6.1.25 INT_BUCK_2_3

Address: 0x1D

D7	D6	D5	D4	D3	D2	D1	D0
Reserved	BUCK3_PG_INT	BUCK3_SC_INT	BUCK3_ILIM_INT	Reserved	BUCK2_PG_INT	BUCK2_SC_INT	BUCK2_ILIM_INT

Bits	Field	Type	Default	Description
7	Reserved	R/W	0h	
6	BUCK3_PG_INT	R/W1C	0h	Latched status bit indicating that the BUCK3 output voltage reached the power-good-threshold level. Write this bit to 1h to clear.
5	BUCK3_SC_INT	R/W1C	0h	Latched status bit indicating that the BUCK3 output voltage has fallen to less than the 0.35-V level during operation or the BUCK3 output did not reach the 0.35-V level in 1 ms from enable. Write this bit to 1h to clear.
4	BUCK3_ILIM_INT	R/W1C	0h	Latched status bit indicating that the output current limit is active. Write this bit to 1h to clear.
3	Reserved	R/W	0h	
2	BUCK2_PG_INT	R/W1C	0h	Latched status bit indicating that the BUCK2 output voltage reached the power-good-threshold level. Write this bit to 1h to clear.
1	BUCK2_SC_INT	R/W1C	0h	Latched status bit indicating that the BUCK2 output voltage has fallen to less than the 0.35-V level during operation or the BUCK2 output did not reach the 0.35-V level in 1 ms from enable. Write this bit to 1h to clear.
0	BUCK2_ILIM_INT	R/W1C	0h	Latched status bit indicating that the output current limit is active. Write this bit to 1h to clear.

8.6.1.26 TOP_STAT

Address: 0x1E

D7	D6	D5	D4	D3	D2	D1	D0
Reserved			SYNC_CLK_STAT	TDIE_SD_STAT	TDIE_WARN_STAT	OVP_STAT	Reserved

Bits	Field	Type	Default	Description
7:5	Reserved	R	0h	
4	SYNC_CLK_STAT	R	0h	Status bit indicating the status of the external clock (CLKIN). 0h = External clock frequency is valid 1h = External clock frequency is not valid
3	TDIE_SD_STAT	R	0h	Status bit indicating the status of the thermal shutdown condition. 0h = Die temperature is less than the thermal shutdown level 1h = Die temperature is greater than the thermal shutdown level

Copyright © 2018, Texas Instruments Incorporated

Bits	Field	Type	Default	Description
2	TDIE_WARN_STAT	R	0h	Status bit indicating the status of thermal warning condition. 0h = Die temperature is less than the thermal warning level 1h = Die temperature is greater than the thermal warning level
1	OVP_STAT	R	0h	Status bit indicating the status of input overvoltage monitoring. 0h = Input voltage is less than the overvoltage threshold level 1h = Input voltage is greater than the overvoltage threshold level
0	Reserved	R	0h	

8.6.1.27 BUCK_0_1_STAT

Address: 0x1F

D7	D6	D5	D4	D3	D2	D1	D0
BUCK1_STAT	BUCK1_PG_STAT	Reserved	BUCK1_ILIM_STAT	BUCK0_STAT	BUCK0_PG_STAT	Reserved	BUCK0_ILIM_STAT

Bits	Field	Type	Default	Description
7	BUCK1_STAT	R	0	Status bit indicating the enable or disable status of the BUCK1 regulator. 0h = BUCK1 regulator is disabled 1h = BUCK1 regulator is enabled
6	BUCK1_PG_STAT	R	0	Status bit indicating the validity of the BUCK1 output voltage (raw status). 0h = BUCK1 output is less than the power-good-threshold level 1h = BUCK1 output is greater than the power-good-threshold level
5	Reserved	R	0	
4	BUCK1_ILIM_STAT	R	0	Status bit indicating the BUCK1 current limit status (raw status). 0h = BUCK1 output current is less than the current limit level 1h = BUCK1 output current limit is active
3	BUCK0_STAT	R	0	Status bit indicating the enable or disable status of the BUCK0 regulator. 0h = BUCK0 regulator is disabled 1h = BUCK0 regulator is enabled
2	BUCK0_PG_STAT	R	0	Status bit indicating the validity of the BUCK0 output voltage (raw status). 0h = BUCK0 output is less than the power-good-threshold level 1h = BUCK0 output is greater than the power-good-threshold level
1	Reserved	R	0	
0	BUCK0_ILIM_STAT	R	0	Status bit indicating the BUCK0 current limit status (raw status). 0h = BUCK0 output current is less than the current limit level 1h = BUCK0 output current limit is active

8.6.1.28 BUCK_2_3_STAT

Address: 0x20

D7	D6	D5	D4	D3	D2	D1	D0
BUCK3_STAT	BUCK3_PG_STAT	Reserved	BUCK3_ILIM_STAT	BUCK2_STAT	BUCK2_PG_STAT	Reserved	BUCK2_ILIM_STAT

Bits	Field	Type	Default	Description
7	BUCK3_STAT	R	0	Status bit indicating the enable or disable status of the BUCK3 regulator. 0h = BUCK3 regulator is disabled 1h = BUCK3 regulator is enabled
6	BUCK3_PG_STAT	R	0	Status bit indicating the validity of the BUCK3 output voltage (raw status). 0h = BUCK3 output is less than the power-good-threshold level 1h = BUCK3 output is greater than the power-good-threshold level
5	Reserved	R	0	
4	BUCK3_ILIM_STAT	R	0	Status bit indicating the BUCK3 current limit status (raw status). 0h = BUCK3 output current is less than the current limit level 1h = BUCK3 output current limit is active
3	BUCK2_STAT	R	0	Status bit indicating the enable or disable status of the BUCK2 regulator. 0h = BUCK2 regulator is disabled 1h = BUCK2 regulator is enabled

Bits	Field	Type	Default	Description
2	BUCK2_PG_STAT	R	0	Status bit indicating the validity of the BUCK2 output voltage (raw status) 0h = BUCK2 output is less than the power-good-threshold level 1h = BUCK2 output is greater than the power-good-threshold level
1	Reserved	R	0	
0	BUCK2_ILIM_STAT	R	0	Status bit indicating the BUCK2 current limit status (raw status). 0h = BUCK2 output current is less than the current limit level 1h = BUCK2 output current limit is active

8.6.1.29 TOP_MASK1

Address: 0x21

D7	D6	D5	D4	D3	D2	D1	D0
Reserved	Reserved		SYNC_CLK_MASK	Reserved	TDIE_WARN_MASK	Reserved	I_LOAD_READY_MASK

Bits	Field	Type	Default	Description
7	Reserved	R/W	1h	
6:5	Reserved	R/W	0h	
4	SYNC_CLK_MASK	R/W	X	Masking for the external clock detection interrupt (the NO_SYNC_CLK bit in the INT_TOP1 register) 0h = Interrupt generated 1h = Interrupt not generated
3	Reserved	R/W	0h	
2	TDIE_WARN_MASK	R/W	X	Masking for the thermal warning interrupt (the TDIE_WARN bit in the INT_TOP1 register) This bit does not affect TDIE_WARN_STAT status bit in the TOP_STAT register. 0h = Interrupt generated 1h = Interrupt not generated
1	Reserved	R/W	0	
0	I_LOAD_READY_MASK	R/W	X	Masking for the load-current measurement-ready interrupt (the I_LOAD_READY bit in the INT_TOP register). 0h = Interrupt generated 1h = Interrupt not generated

8.6.1.30 TOP_MASK2

Address: 0x22

D7	D6	D5	D4	D3	D2	D1	D0
Reserved							RESET_REG_MASK

Bits	Field	Type	Default	Description
7:1	Reserved	R/W	0h	
0	RESET_REG_MASK	R/W	X	Masking for the register reset interrupt (the RESET_REG bit in the INT_TOP2 register) 0h = Interrupt generated 1h = Interrupt not generated

8.6.1.31 BUCK_0_1_MASK

Address: 0x23

D7	D6	D5	D4	D3	D2	D1	D0
Reserved	BUCK1_PG_MASK	Reserved	BUCK1_ILIM_MASK	Reserved	BUCK0_PG_MASK	Reserved	BUCK0_ILIM_MASK

Copyright © 2018, Texas Instruments Incorporated

Bits	Field	Type	Default	Description
7	Reserved	R/W	0h	
6	BUCK1_PG_MASK	R/W	X	Masking for the BUCK1 power-good interrupt (the BUCK1_PG_INT bit in the INT_BUCK_0_1 register) This bit does not affect BUCK1_PG_STAT status bit in BUCK_0_1_STAT register. 0h = Interrupt generated 1h = Interrupt not generated
5	Reserved	R	0h	
4	BUCK1_ILIM_MASK	R/W	X	Masking for the BUCK1 current-limit-detection interrupt (the BUCK1_ILIM_INT bit in the INT_BUCK_0_1 register) This bit does not affect the BUCK1_ILIM_STAT status bit in the BUCK_0_1_STAT register. 0h = Interrupt generated 1h = Interrupt not generated
3	Reserved	R/W	0h	
2	BUCK0_PG_MASK	R/W	X	Masking for the BUCK0 power-good interrupt (the BUCK0_PG_INT bit in the INT_BUCK_0_1 register) This bit does not affect the BUCK0_PG_STAT status bit in the BUCK_0_1_STAT register. 0h = Interrupt generated 1h = Interrupt not generated
1	Reserved	R	0h	
0	BUCK0_ILIM_MASK	R/W	X	Masking for the BUCK0 current-limit-detection interrupt (the BUCK0_ILIM_INT bit in the INT_BUCK_0_1 register) This bit does not affect the BUCK0_ILIM_STAT status bit in the BUCK_0_1_STAT register. 0h = Interrupt generated 1h = Interrupt not generated

8.6.1.32 BUCK_2_3_MASK

Address: 0x24

D7	D6	D5	D4	D3	D2	D1	D0
Reserved	BUCK3_PG_MASK	Reserved	BUCK3_ILIM_MASK	Reserved	BUCK2_PG_MASK	Reserved	BUCK2_ILIM_MASK

Bits	Field	Type	Default	Description
7	Reserved	R/W	0h	
6	BUCK3_PG_MASK	R/W	X	Masking for the BUCK3 power-good interrupt (the BUCK3_PG_INT bit in the INT_BUCK_2_3 register) This bit does not affect the BUCK3_PG_STAT status bit in the BUCK_2_3_STAT register. 0h = Interrupt generated 1h = Interrupt not generated
5	Reserved	R	0h	
4	BUCK3_ILIM_MASK	R/W	X	Masking for the BUCK3 current-limit-detection interrupt (the BUCK3_ILIM_INT bit in the INT_BUCK_2_3 register) This bit does not affect the BUCK3_ILIM_STAT status bit in the BUCK_2_3_STAT register. 0h = Interrupt generated 1h = Interrupt not generated
3	Reserved	R/W	0h	
2	BUCK2_PG_MASK	R/W	X	Masking for the BUCK2 power-good interrupt (the BUCK2_PG_INT bit in the INT_BUCK_2_3 register) This bit does not affect the BUCK2_PG_STAT status bit in the BUCK_2_3_STAT register. 0h = Interrupt generated 1h = Interrupt not generated
1	Reserved	R	0h	

Bits	Field	Type	Default	Description
0	BUCK2_ILIM_MASK	R/W	X	Masking for the BUCK2 current limit-detection interrupt (the BUCK2_ILIM_INT bit in the INT_BUCK_2_3 register) This bit does not affect the BUCK2_ILIM_STAT status bit in the BUCK_2_3_STAT register. 0h = Interrupt generated 1h = Interrupt not generated

8.6.1.33 SEL_I_LOAD

Address: 0x25

D7	D6	D5	D4	D3	D2	D1	D0
Reserved						LOAD_CURRENT_BUCK_SELECT[1:0]	

Bits	Field	Type	Default	Description
7:2	Reserved	R/W	0h	
1:0	LOAD_CURRENT_BUCK_SELECT[1:0]	R/W	0h	This bit starts the current measurement on the selected regulator. One measurement is started when the register is written. If the selected buck is a master, the measurement result is the sum of the current of both the master and slave bucks. If the selected buck is a slave, the measurement result is the current of the selected slave bucks. 0h = BUCK0 1h = BUCK1 2h = BUCK2 3h = BUCK3

Copyright © 2018, Texas Instruments Incorporated

8.6.1.34 I_LOAD_2

Address: 0x26

D7	D6	D5	D4	D3	D2	D1	D0
Reserved						BUCK_LOAD_CURRENT[9:8]	

Bits	Field	Type	Default	Description
7:2	Reserved	R	0h	
1:0	BUCK_LOAD_CURRENT[9:8]	R	0h	This register describes the three MSB bits of the average load current on the selected regulator with a resolution of 20 mA per LSB and maximum code corresponding to a 20.47-A current.

8.6.1.35 I_LOAD_1

Address: 0x27

D7	D6	D5	D4	D3	D2	D1	D0
BUCK_LOAD_CURRENT[7:0]							

Bits	Field	Type	Default	Description
7:0	BUCK_LOAD_CURRENT[7:0]	R	0x00	This register describes the eight LSB bits of the average load current on the selected regulator with a resolution of 20 mA per LSB and maximum code corresponding to a 20.47-A current.

8.6.1.36 PGOOD_CTRL1

Address: 0x28

D7	D6	D5	D4	D3	D2	D1	D0
PG3_SEL[1:0]		PG2_SEL[1:0]		PG1_SEL[1:0]		PG0_SEL[1:0]	

Bits	Field	Type	Default	Description
7:6	PG3_SEL[1:0]	R/W	X	PGOOD signal source control from the BUCK3 regulator 0h = Masked 1h = Power-good-threshold voltage 2h = Reserved, do not use 3h = Power-good-threshold voltage AND current limit
5:4	PG2_SEL[1:0]	R/W	X	PGOOD signal source control from the BUCK2 regulator 0h = Masked 1h = Power-good-threshold voltage 2h = Reserved, do not use 3h = Power-good threshold voltage AND current limit
3:2	PG1_SEL[1:0]	R/W	X	PGOOD signal source control from the BUCK1 regulator 0h = Masked 1h = Power-good-threshold voltage 2h = Reserved, do not use 3h = Power-good-threshold voltage AND current limit
1:0	PG0_SEL[1:0]	R/W	X	PGOOD signal source control from the BUCK0 regulator 0h = Masked 1h = Power-good-threshold voltage 2h = Reserved, do not use 3h = Power-good-threshold voltage AND current limit

8.6.1.37 PGOOD_CTRL2

Address: 0x29

D7	D6	D5	D4	D3	D2	D1	D0
HALF_DELAY	EN_PG0_NINT	PGOOD_SET_DELAY	EN_PGFLT_STAT	Reserved	PGOOD_WINDOW	PGOOD_OD	PGOOD_POL

Bits	Field	Type	Default	Description
7	HALF_DELAY	R/W	X	This bit elects the time step for the start-up and shutdown delays. 0h = Start-up and shutdown delays have 0.5-ms or 1-ms time steps, based on the DOUBLE_DELAY bit in the CONFIG register. 1h = Start-up and shutdown delays have 0.32-ms or 0.64-ms time steps, based on the DOUBLE_DELAY bit in the CONFIG register.
6	EN_PG0_NINT	R/W	X	This bit combines theBUCK0 PGOOD signal with the nINT signal 0h = BUCK0 PGOOD signal not included with the nINT signal 1h = BUCK0 PGOOD signal included with the nINT signal. If the nINT OR the BUCK0 PGOOD signal is low then the nINT signal is low.
5	PGOOD_SET_DELAY	R/W	X	Debounce time of the output voltage monitoring for the PGOOD signal (only when the PGOOD signal goes valid) 0h = 4-10 µs 1h = 11 ms
4	EN_PGFLT_STAT	R/W	X	Operation mode for PGOOD signal 0h = Indicates live status of monitored voltage outputs 1h = Indicates status of the PGOOD_FLT register, inactive if at least one of the PGx_FLT bit is inactive
3	Reserved	R/W	0h	
2	PGOOD_WINDOW	R/W	X	Voltage monitoring method for the PGOOD signal 0h = Only undervoltage monitoring 1h = Overvoltage and undervoltage monitoring
1	PGOOD_OD	R/W	X	PGOOD signal type 0h = Push-pull output (VANA level) 1h = Open-drain output
0	PGOOD_POL	R/W	X	PGOOD signal polarity 0h = PGOOD signal high when monitored outputs are valid 1h = PGOOD signal low when monitored outputs are valid

8.6.1.38 PGOOD_FLT

Address: 0x2A

D7	D6	D5	D4	D3	D2	D1	D0
Reserved				PG3_FLT	PG2_FLT	PG1_FLT	PG0_FLT

Bits	Field	Type	Default	Description
7:4	Reserved	R/W	0x0	
3	PG3_FLT	R	0	Source for the PGOOD inactive signal 0h = BUCK3 has not set the PGOOD signal inactive. 1h = BUCK3 has set the PGOOD signal inactive. This bit can be cleared by reading this register when the BUCK3 output is valid.
2	PG2_FLT	R	0	Source for the PGOOD inactive signal 0h = BUCK2 has not set the PGOOD signal inactive. 1h = BUCK2 has set the PGOOD signal inactive. This bit can be cleared by reading this register when the BUCK2 output is valid.
1	PG1_FLT	R	0	Source for the PGOOD inactive signal 0h = BUCK1 has not set the PGOOD signal inactive. 1h = BUCK1 has set the PGOOD signal inactive. This bit can be cleared by reading this register when the BUCK1 output is valid.
0	PG0_FLT	R	0	Source for the PGOOD inactive signal 0h = BUCK0 has not set the PGOOD signal inactive. 1h = BUCK0 has set the PGOOD signal inactive. This bit can be cleared by reading this register when the BUCK0 output is valid.

8.6.1.39 PLL_CTRL

Address: 0x2B

D7	D6	D5	D4	D3	D2	D1	D0
PLL_MODE[1:0]		Reserved	EXT_CLK_FREQ[4:0]				

Copyright © 2018, Texas Instruments Incorporated

Bits	Field	Type	Default	Description
7:6	PLL_MODE[1:0]	R/W	X	This bit selects the external clock and PLL operation. 0h = Forced to internal RC oscillator (PLL is disabled). 1h = PLL is enabled in the STANDBY and ACTIVE states. Automatic external clock use when available, interrupt generated if external clock appears or disappears. 2h = PLL is enabled only in the ACTIVE state. Automatic external clock use when available, interrupt generated if external clock appears or disappears. 3h = Reserved
5	Reserved	R/W	0	
4:0	EXT_CLK_FREQ[4:0]	R/W	X	Frequency of the external clock (CLKIN). For the input clock frequency tolerance see the *Electrical Characteristics* table. Settings 18h through 1Fh are reserved and must not be used. 0x00h = 1 MHz 0x01h = 2 MHz 2h = 3 MHz 16h = 23 MHz 17h = 24 MHz .

8.6.1.40 PIN_FUNCTION

Address: 0x2C

D7	D6	D5	D4	D3	D2	D1	D0
EN_SPREAD_SPEC	EN_PIN_CTRL_GPIO3	EN_PIN_SELECT_GPIO3	EN_PIN_CTRL_GPIO2	EN_PIN_SELECT_GPIO2	GPIO3_SEL	GPIO2_SEL	GPIO1_SEL

Bits	Field	Type	Default	Description
7	EN_SPREAD_SPEC	R/W	X	This bit enables the spread-spectrum feature. 0h = Disabled 1h = Enabled
6	EN_PIN_CTRL_GPIO3	R/W	X	This bit enables EN1 and EN2 pin control for GPIO3 (the GPIO3_SEL bit is set to 1h AND the GPIO3_DIR bit is set to 1h). 0h = Only GPIO3_OUT bit controls GPIO3 1h = GPIO3_OUT bit AND ENx pin control GPIO3
5	EN_PIN_SELECT_GPIO3	R/W	X	This bit enables EN1 and EN2 pin control for GPIO3. 0h = GPIO3_SEL bit AND EN1 pin control GPIO3 1h = GPIO3_SEL bit AND EN2 pin control GPIO3
4	EN_PIN_CTRL_GPIO2	R/W	X	This bit enables EN1 and EN3 pin control for GPIO2 (the GPIO2_SEL bit is set to 1h AND the GPIO2_DIR bit is set to 1h). 0h = Only GPIO2_OUT bit controls GPIO2 1h = GPIO2_OUT bit AND ENx pin control GPIO2
3	EN_PIN_SELECT_GPIO2	R/W	X	This bit enables EN1 and EN3 pin control for GPIO2 0h = GPIO2_SEL bit AND EN1 pin control GPIO2 1h = GPIO2_SEL bit AND EN3 pin control GPIO2
2	GPIO3_SEL	R/W	X	This bit selects the EN3 pin function 0h = EN3 1h = GPIO3
1	GPIO2_SEL	R/W	X	This bit selects the EN2 pin function 0h = EN2 1h = GPIO2
0	GPIO1_SEL	R/W	X	This bit selects the EN1 pin function 0h = EN1 1h = GPIO1

8.6.1.41 GPIO_CONFIG

Address: 0x2D

D7	D6	D5	D4	D3	D2	D1	D0
Reserved	GPIO3_OD	GPIO2_OD	GPIO1_OD	Reserved	GPIO3_DIR	GPIO2_DIR	GPIO1_DIR

Bits	Field	Type	Default	Description
7	Reserved	R	0h	
6	GPIO3_OD	R/W	X	GPIO3 signal type when configured as an output 0h = Push-pull output (VANA level) 1h = Open-drain output
5	GPIO2_OD	R/W	X	GPIO2 signal type when configured as an output 0h = Push-pull output (VANA level) 1h = Open-drain output
4	GPIO1_OD	R/W	X	GPIO1 signal type when configured as an output 0h = Push-pull output (VANA level) 1h = Open-drain output
3	Reserved	R	0h	
2	GPIO3_DIR	R/W	X	GPIO3 signal direction 0h = Input 1h = Output
1	GPIO2_DIR	R/W	X	GPIO2 signal direction 0h = Input 1h = Output
0	GPIO1_DIR	R/W	X	GPIO1 signal direction 0h = Input 1h = Output

8.6.1.42 GPIO_IN

Address: 0x2E

D7	D6	D5	D4	D3	D2	D1	D0
Reserved					GPIO3_IN	GPIO2_IN	GPIO1_IN

Bits	Field	Type	Default	Description
7:3	Reserved	R	0h	
2	GPIO3_IN	R	0h	State of the GPIO3 signal 0h = Logic-low level 1h = Logic high level
1	GPIO2_IN	R	0h	State of the GPIO2 signal 0h = Logic-low level 1h = Logic-high level
0	GPIO1_IN	R	0h	State of the GPIO1 signal 0h = Logic-low level 1h = Logic-high level

8.6.1.43 GPIO_OUT

Address: 0x2F

D7	D6	D5	D4	D3	D2	D1	D0
Reserved					GPIO3_OUT	GPIO2_OUT	GPIO1_OUT

Bits	Field	Type	Default	Description
7:3	Reserved	R/W	0h	
2	GPIO3_OUT	R/W	X	Control for theGPIO3 signal when configured as the GPIO output 0h = Logic-low level 1h = Logic-high level
1	GPIO2_OUT	R/W	X	Control for the GPIO2 signal when configured as the GPIO output 0h = Logic-low level 1h = Logic-high level
0	GPIO1_OUT	R/W	0h	Control for theGPIO1 signal when configured as the GPIO output 0h = Logic-low level 1h = Logic-high level

Copyright © 2018, Texas Instruments Incorporated

9 Application and Implementation

NOTE

Information in the following applications sections is not part of the TI component specification, and TI does not warrant its accuracy or completeness. TI's customers are responsible for determining suitability of components for their purposes. Customers should validate and test their design implementation to confirm system functionality.

9.1 Application Information

The LP8752x-Q1 is a multiphase step-down converter with four switcher cores, which can be configured to:

- single output four-phase regulator,
- three-phase and one-phase regulators,
- two-phase and two one-phase regulators,
- four one-phase regulators or
- two 2-phase regulators

configuration.

9.2 Typical Applications

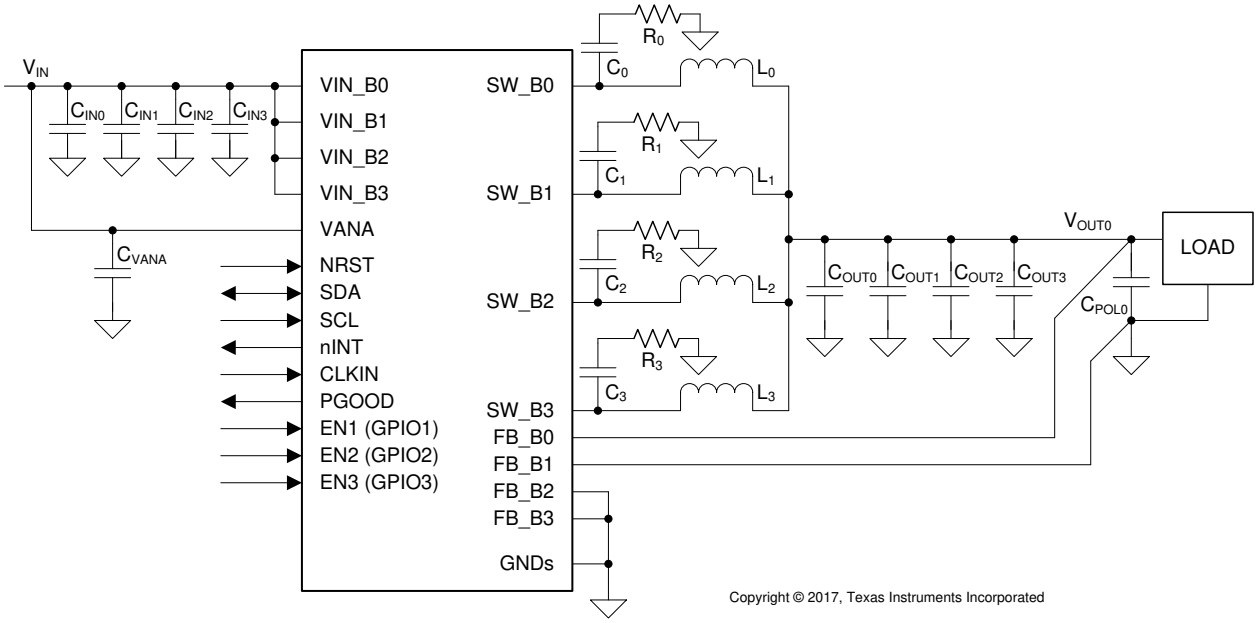

Figure 28. 4-Phase Configuration (LP87521-Q1)

Typical Applications (continued)

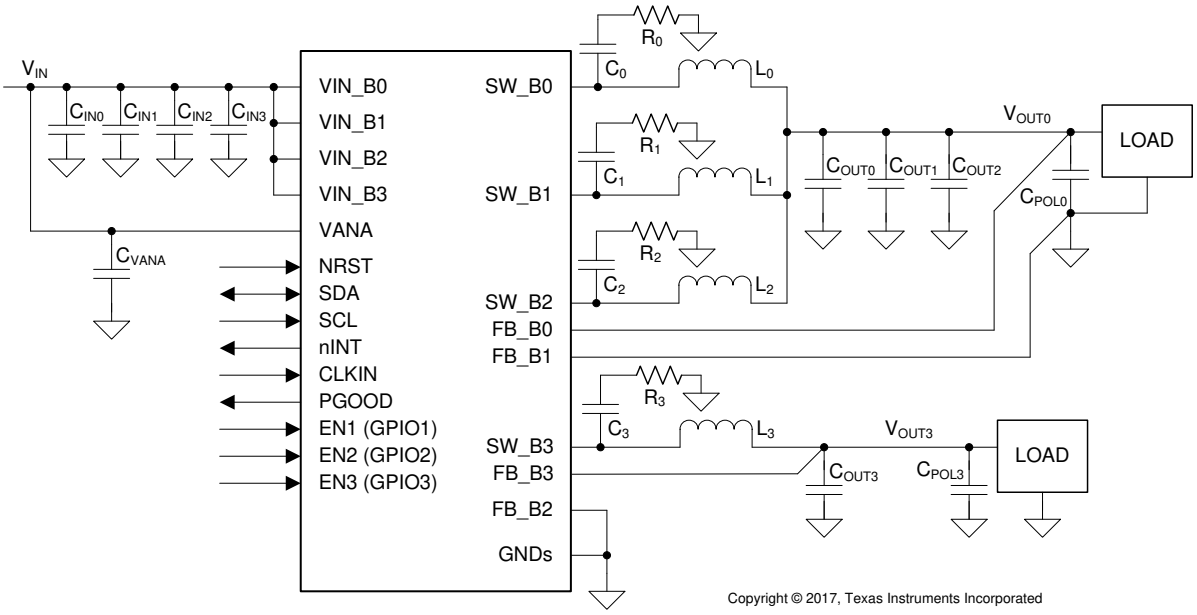

Figure 29. 3-Phase and 1-Phase Configuration (LP87522-Q1)

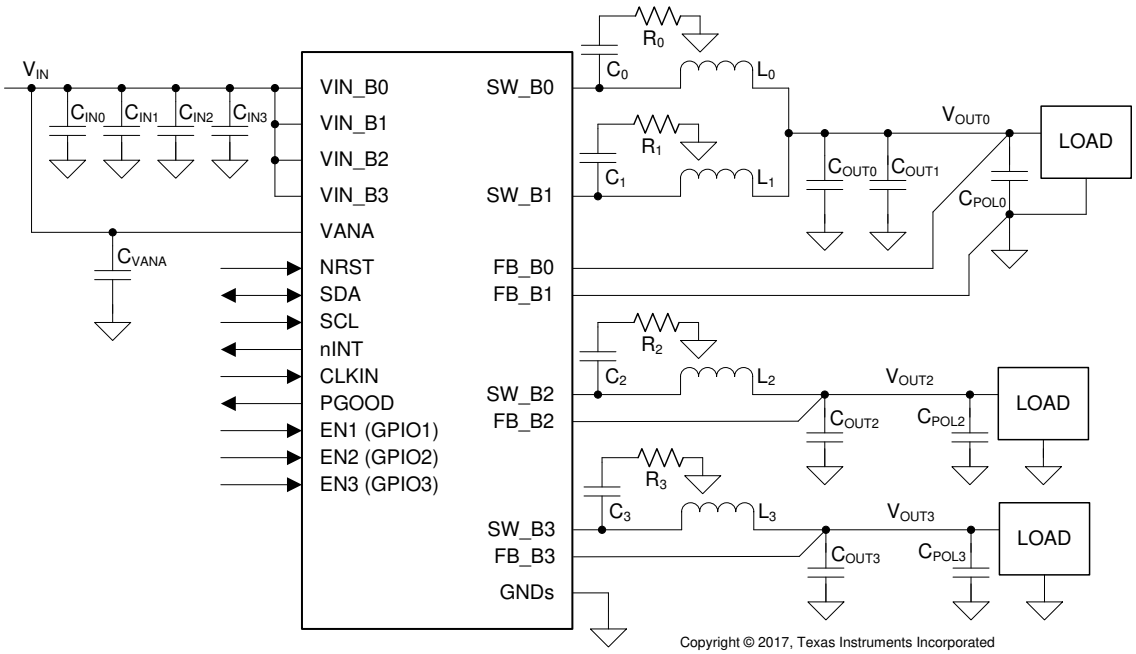

Figure 30. 2-Phase and Two 1-Phase Configuration (LP87523-Q1)

Copyright © 2018, Texas Instruments Incorporated

Typical Applications (continued)

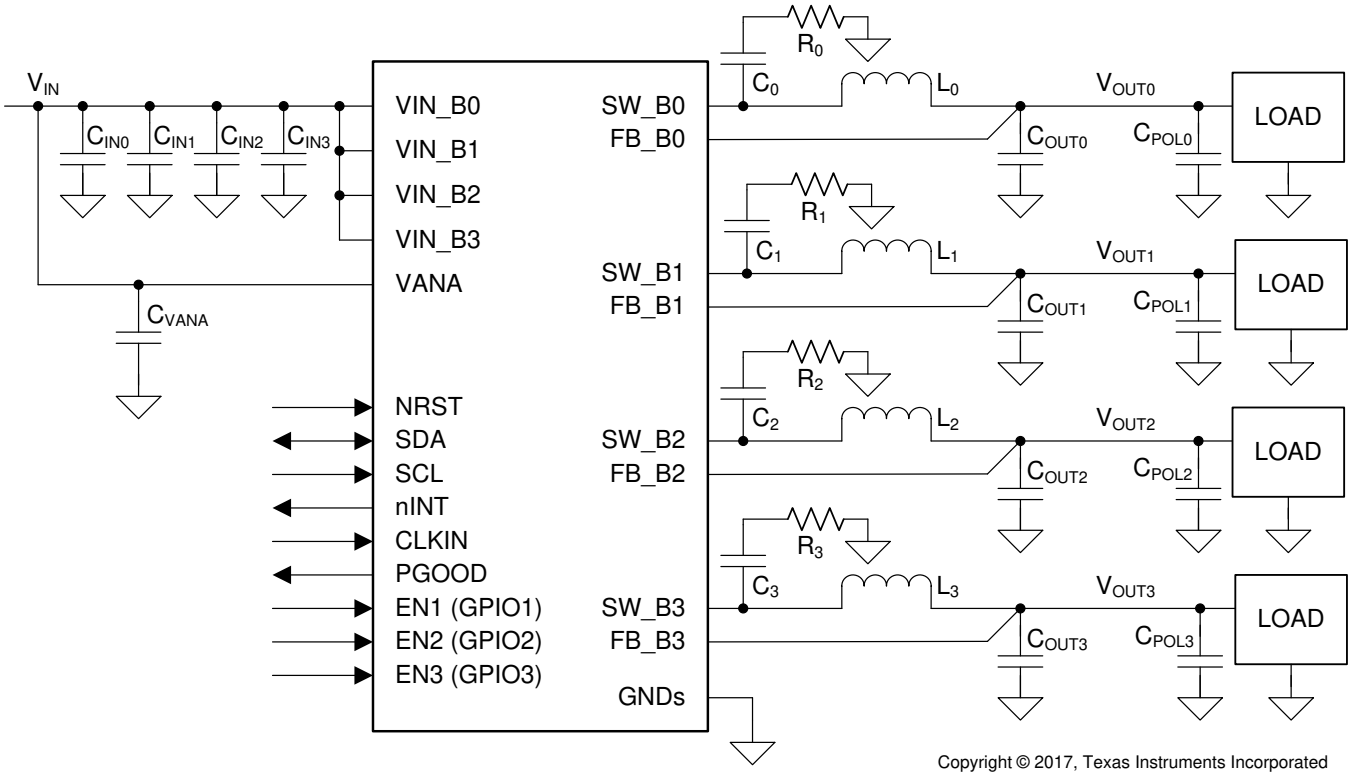

Figure 31. Four 1-Phase Configuration (LP87524-Q1)

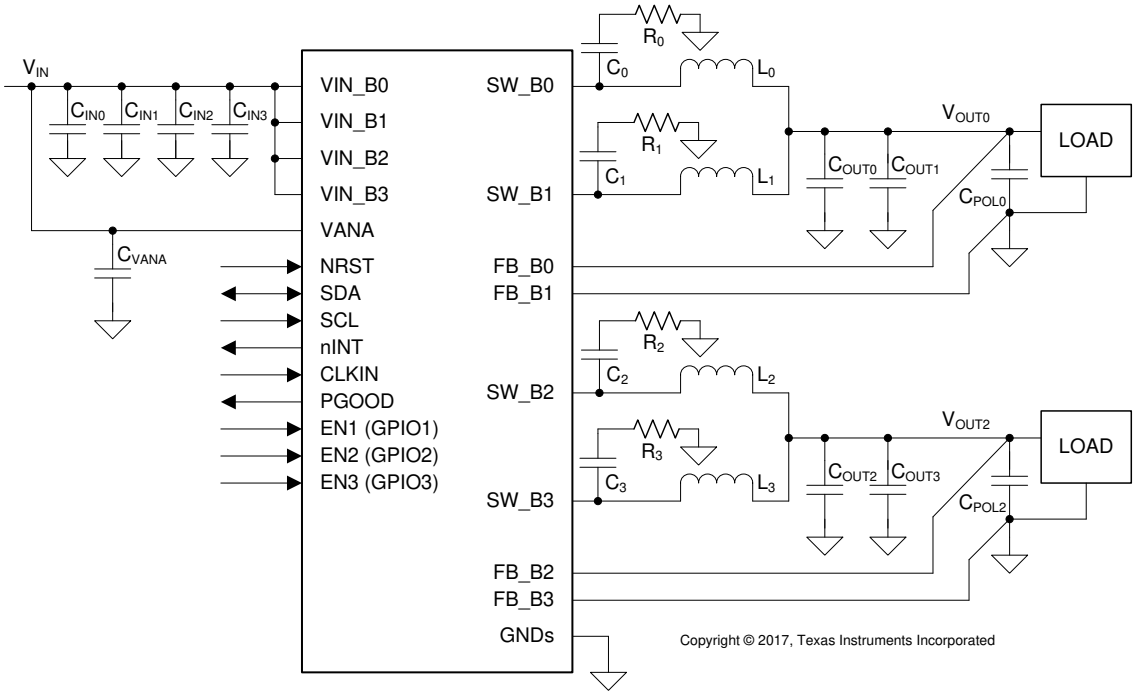

Figure 32. Two 2-Phase Configuration (LP87525-Q1)

Typical Applications (continued)

9.2.1 Design Requirements

9.2.1.1 Inductor Selection

The inductors are L_0, L_1, L_2, and L_3 are shown in the *Typical Applications*. The inductance and DCR of the inductor affects the control loop of the buck regulator. TI recommends using inductors similar to those listed in Table 10. Pay attention to the saturation current and temperature rise current of the inductor. Check that the saturation current is higher than the peak current limit and the temperature rise current is higher than the maximum expected rms output current. The minimum effective inductance to make sure performance is good is 0.22 µH at maximum peak output current over the operating temperature range. DC resistance of the inductor must be less than 0.05 Ω for good efficiency at high-current condition. The inductor AC loss (resistance) also affects conversion efficiency. Higher Q factor at switching frequency usually gives better efficiency at light load to middle load. Shielded inductors are preferred as they radiate less noise.

Table 10. Recommended Inductors

MANUFACTURER	PART NUMBER	VALUE	DIMENSIONS L × W × H (mm)	RATED DC CURRENT, I_{SAT} maximum (typical) / I_{TEMP} maximum (typical) (A)	DCR typical / maximum (mΩ)
TOKO	DFE252012PD-R47M	0.47 µH (20%)	2.5 × 2 × 1.2	5.2 (–) / 4 (–)(1)	- / 27
Vishay	IHLP1616AB-1A	0.47 µH (20%)	4.1 × 4.5 × 1.2	– (6) / – (6)(1)	19 / 21

(1) Operating temperature range is up to 125°C including self temperature rise.

9.2.1.2 Input Capacitor Selection

The input capacitors C_{IN0}, C_{IN1}, C_{IN2}, and C_{IN3} are shown in the *Typical Applications*. A ceramic input bypass capacitor of 10 µF is required for each phase of the regulator. Place the input capacitor as close as possible to the VIN_Bx pin and PGND_Bx pin of the device. A larger value or higher voltage rating improves the input voltage filtering. Use X7R type of capacitors, not Y5V or F. DC bias characteristics capacitors must be considered. The minimum effective input capacitance to make sure performance is good is 1.9 µF for each buck input at the maximum input voltage including tolerances and ambient temperature range. This value assumes that at least 22 µF of additional capacitance is common for all the power input pins on the system power rail. See Table 11.

The input filter capacitor supplies current to the high-side FET switch in the first half of each cycle and decreases voltage ripple imposed on the input power source. A ceramic capacitor's low ESR provides the best noise filtering of the input voltage spikes due to this rapidly changing current. Select an input filter capacitor with sufficient ripple current rating. In addition ferrite can be used in front of the input capacitor to decrease the EMI.

Table 11. Recommended Input Capacitors (X7R Dielectric)

MANUFACTURER	PART NUMBER	VALUE	CASE SIZE	DIMENSIONS L × W × H (mm)	VOLTAGE RATING (V)
Murata	GCM21BR71A106KE22	10 µF (10%)	0805	2 × 1.25 × 1.25	10 V

Copyright © 2018, Texas Instruments Incorporated

9.2.1.3 Output Capacitor Selection

The output capacitors C_{OUT0}, C_{OUT1}, C_{OUT2}, and C_{OUT3} are shown in *Typical Applications*. A ceramic local output capacitor of 22 µF is required per phase. Use ceramic capacitors, X7R or X7T types; do not use Y5V or F. DC bias voltage characteristics of ceramic capacitors must be considered. The output filter capacitor smooths out current flow from the inductor to the load, helps keep a steady output voltage during transient load changes and decreases output voltage ripple. These capacitors must be selected with sufficient capacitance and sufficiently low ESR and ESL to do these functions. The minimum effective output capacitance to make sure performance is good is 10 µF for each phase including the DC voltage roll-off, tolerances, aging and temperature effects.

The output voltage ripple is caused by the charging and discharging of the output capacitor and also due to its R_{ESR}. The R_{ESR} is frequency dependent (as well as temperature dependent); make sure the value used for selection process is at the switching frequency of the part. See Table 12.

POL capacitors (C_{POL0}, C_{POL1}, C_{POL2}, C_{POL3}) can be used to improve load transient performance and to decrease the ripple voltage. A higher output capacitance improves the load step behavior and decreases the output voltage ripple as well as decreases the PFM switching frequency. However, output capacitance higher than 100 µF per phase is not necessarily of any benefit. Note that the output capacitor may be the limiting factor in the output voltage ramp and the maximum total output capacitance listed in electrical characteristics for the specified slew rate must not be exceeded. At shutdown the output voltage is discharged to 0.6 V level using forced-PWM operation. This can increase the input voltage if the load current is small and the output capacitor is large. Below 0.6 V level the output capacitor is discharged by the internal discharge resistor and with large capacitor more time is required to settle V_{OUT} down as a consequence of the increased time constant.

Table 12. Recommended Output Capacitors (X7R or X7T Dielectric)

MANUFACTURER	PART NUMBER	VALUE	CASE SIZE	DIMENSIONS L × W × H (mm)	VOLTAGE RATING (V)
Murata	GCM31CR71A226KE02	22 µF (10%)	1206	3.2 × 1.6 × 1.6	10

9.2.1.4 Snubber Components

If the input voltage for the regulators is above 4 V, snubber components are needed at the switching nodes to decrease voltage spiking in the switching node and to improve EMI. The snubber capacitors C_0, C_1, C_2, and C_3 and the snubber resistors R_0, R_1, R_2, and R_3 are shown in Figure 31. The recommended components are shown in Table 13 and these component values give good performance on LP8752x-Q1 EVM. The optimal resistance and capacitance values finally depend on the PCB layout.

Table 13. Recommended Snubber Components

MANUFACTURER	PART NUMBER	VALUE	CASE SIZE	DIMENSIONS L × W x H (mm)	VOLTAGE / POWER RATING
Vishay-Dale	CRCW04023R90JNED	3.9 Ω (5%)	0402	1 × 0.5 × 0.4	62 mW
Murata	GCM1555C1H391JA16	390 pF (5%)	0402	1 × 0.5 × 0.5	50 V

9.2.1.5 Supply Filtering Components

The VANA input is used to supply analog and digital circuits in the device. See Table 14 for recommended components for VANA input supply filtering.

Table 14. Recommended Supply Filtering Components

MANUFACTURER	PART NUMBER	VALUE	CASE SIZE	DIMENSIONS L × W × H (mm)	VOLTAGE RATING (V)
Murata	GCM155R71C104KA55	100 nF (10%)	0402	1 × 0.5 × 0.5	16
Murata	GCM188R71C104KA37	100 nF (10%)	0603	1.6 × 0.8 × 0.8	16

Copyright © 2018, Texas Instruments Incorporated

9.2.1.6 Current Limit vs. Maximum Output Current

The worst case inductor current ripple can be calculated using Equation 1 and Equation 2:

$$D = \frac{V_{OUT}}{V_{IN(max)} \times \eta} \tag{1}$$

$$\Delta I_L = \frac{(V_{IN(max)} - V_{OUT}) \times D}{f_{SW} \times L} \tag{2}$$

Example using Equation 1 and Equation 2:

$V_{IN(max)}$ = 5.5 V

$V_{OUT(max)}$ = 1 V

$\eta_{(min)}$ = 0.75

$f_{SW(min)}$ = 1.8 MHz

$L_{(min)}$ = 0.38 µH

then $D_{(max)}$ = 0.242 and $\Delta I_{L(max)}$ = 1.59 A

Peak current is half of the current ripple. If $I_{LIM_FWD_SET_OTP}$ is 5 A, the minimum forward current limit would be 4.75 A when taking the –5% tolerance into account. In the worst case situation difference between set peak current and maximum load current = 0.795 A + 0.25 A = 1.045 A.

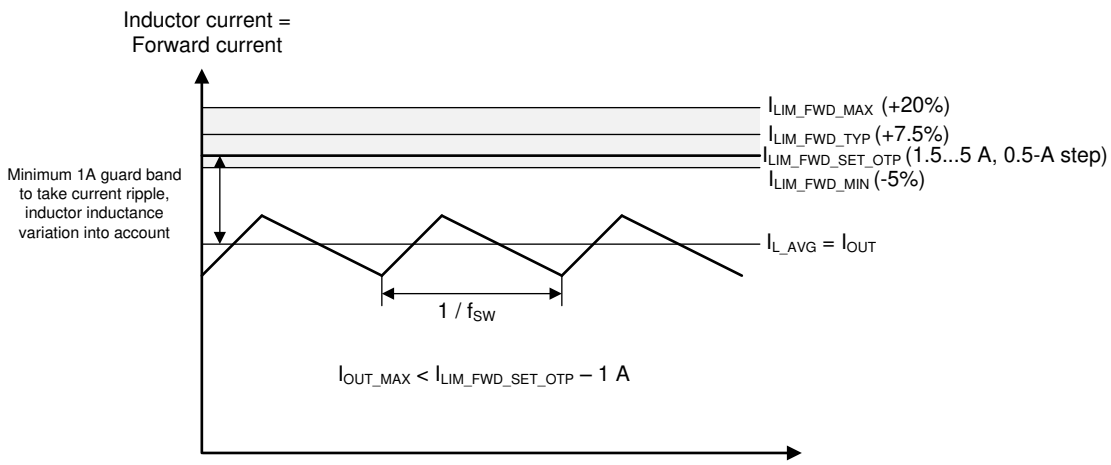

Figure 33. Current Limit vs Maximum Output Current

9.2.2 Detailed Design Procedure

The performance of the LP8752x-Q1 device depends greatly on the care taken in designing the printed circuit board (PCB). The use of low-inductance and low serial-resistance ceramic capacitors is strongly recommended, while correct grounding is crucial. Attention must be given to decoupling the power supplies. Decoupling capacitors must be connected close to the device and between the power and ground pins to support high peak currents being drawn from system power rail during turnon of the switching MOSFETs. Keep input and output traces as short as possible, because trace inductance, resistance, and capacitance can easily become the performance limiting items. The separate power pins VIN_Bx are not connected together internally. Connect the VIN_Bx power connections together outside the package using power plane construction.

Copyright © 2018, Texas Instruments Incorporated

9.2.3 Application Curves

Unless otherwise specified: V_{IN} = 3.7 V, V_{OUT} = 1 V, $V_{(NRST)}$ = 1.8 V, T_A = 25°C, f_{SW} = 2 MHz, L = 0.47 µH (TOKO DFE252012PD-R47M), C_{OUT} = 22 µF / phase, and C_{POL} = 22 µF / phase. Measurements are done using connections in the *Typical Applications* schematics.

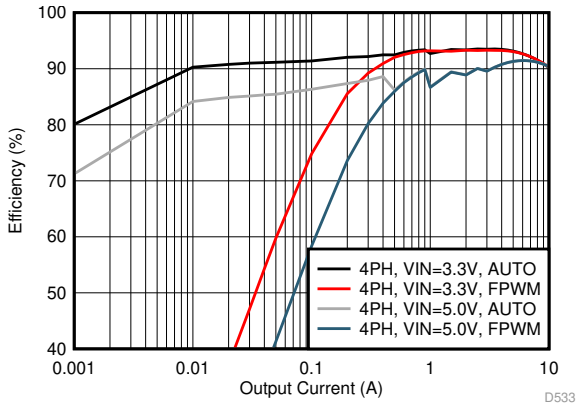

V_{OUT} = 1.8 V

Figure 34. Efficiency in PFM/PWM and Forced-PWM Mode (4-Phase Output)

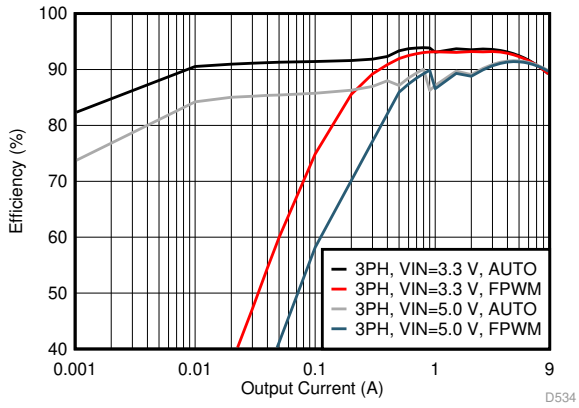

V_{OUT} = 1.8 V

Figure 35. Efficiency in PFM/PWM and Forced-PWM Mode (3-Phase Output)

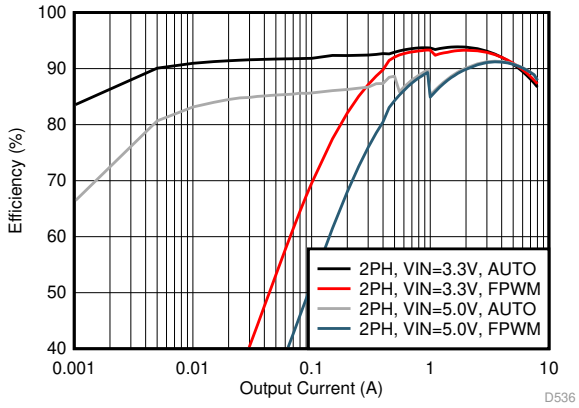

V_{OUT} = 1.8 V

Figure 36. Efficiency in PFM/PWM and Forced-PWM Mode (2-Phase Output)

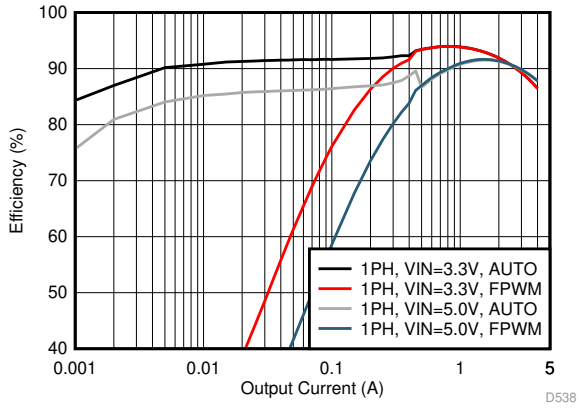

V_{OUT} = 1.8 V

Figure 37. Efficiency in PFM/PWM and Forced-PWM Mode (1-Phase Output)

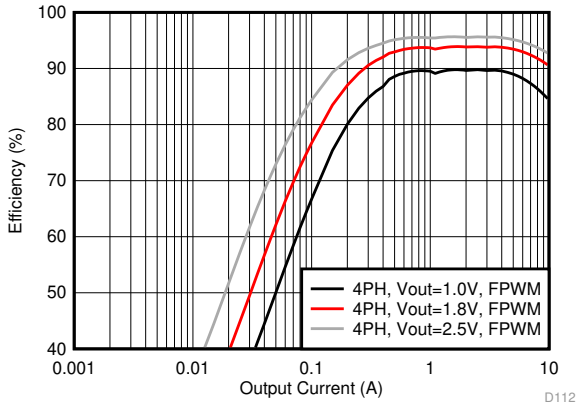

V_{IN} = 3.3 V

Figure 38. Efficiency in Forced-PWM Mode (4-Phase Output)

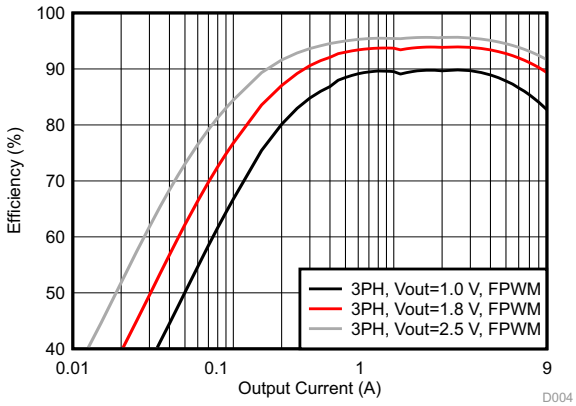

V_{IN} = 3.3 V

Figure 39. Efficiency in Forced-PWM Mode (3-Phase Output)

Unless otherwise specified: V_{IN} = 3.7 V, V_{OUT} = 1 V, $V_{(NRST)}$ = 1.8 V, T_A = 25°C, f_{SW} = 2 MHz, L = 0.47 µH (TOKO DFE252012PD-R47M), C_{OUT} = 22 µF / phase, and C_{POL} = 22 µF / phase. Measurements are done using connections in the *Typical Applications* schematics.

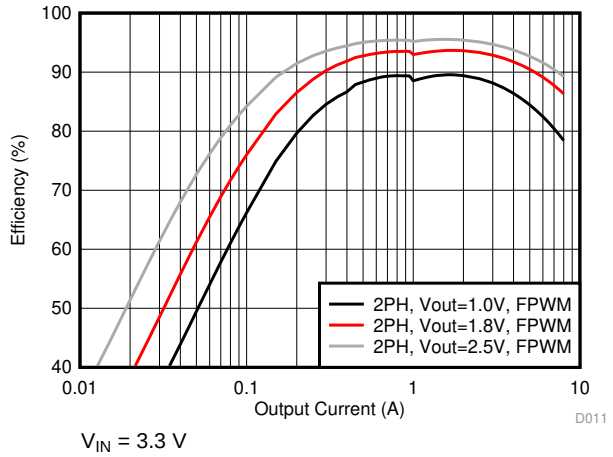

V_{IN} = 3.3 V

Figure 40. Efficiency in Forced-PWM Mode (2-Phase Output)

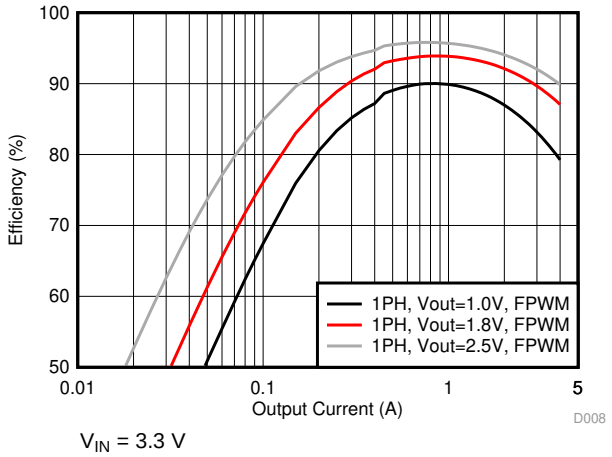

V_{IN} = 3.3 V

Figure 41. Efficiency in Forced-PWM Mode (1-Phase Output)

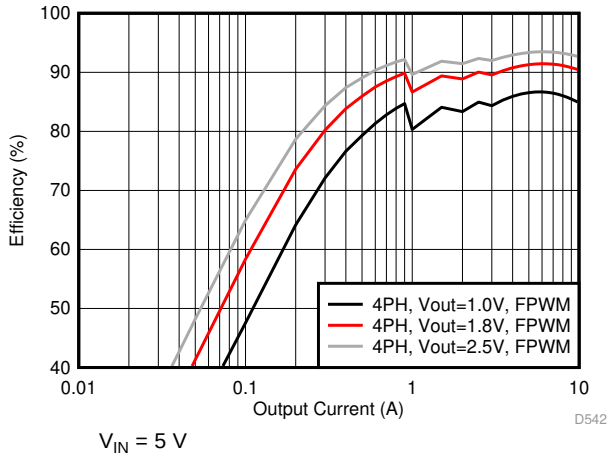

V_{IN} = 5 V

Figure 42. Efficiency in Forced-PWM Mode (4-Phase Output)

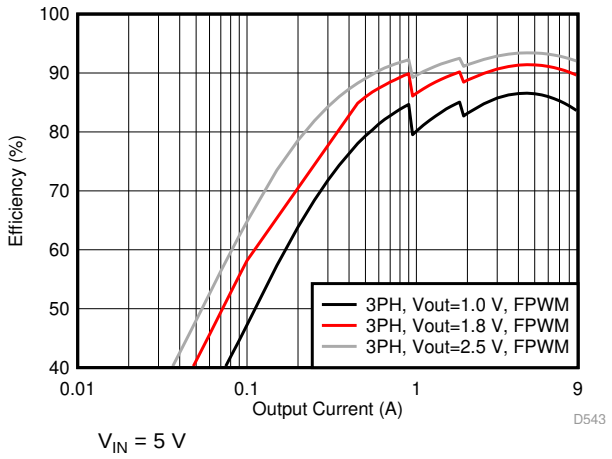

V_{IN} = 5 V

Figure 43. Efficiency in Forced-PWM Mode (3-Phase Output)

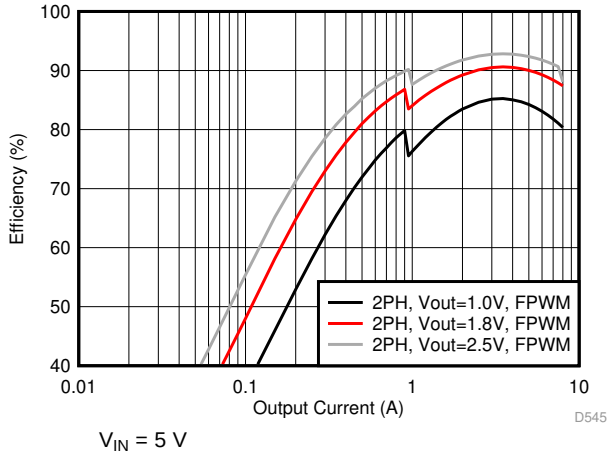

V_{IN} = 5 V

Figure 44. Efficiency in Forced-PWM Mode (2-Phase Output)

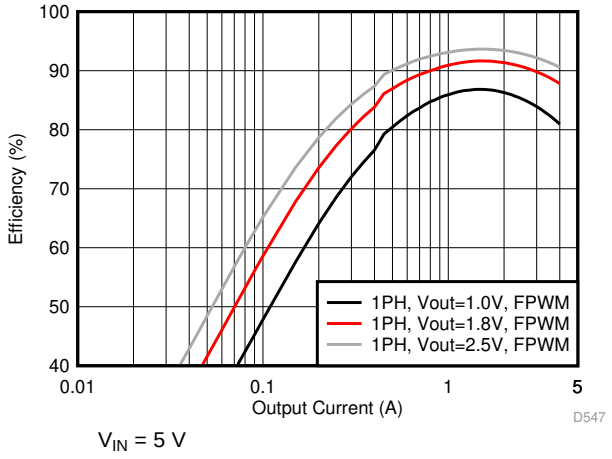

V_{IN} = 5 V

Figure 45. Efficiency in Forced-PWM Mode (1-Phase Output)

Copyright © 2018, Texas Instruments Incorporated

Unless otherwise specified: V_{IN} = 3.7 V, V_{OUT} = 1 V, $V_{(NRST)}$ = 1.8 V, T_A = 25°C, f_{SW} = 2 MHz, L = 0.47 µH (TOKO DFE252012PD-R47M), C_{OUT} = 22 µF / phase, and C_{POL} = 22 µF / phase. Measurements are done using connections in the *Typical Applications* schematics.

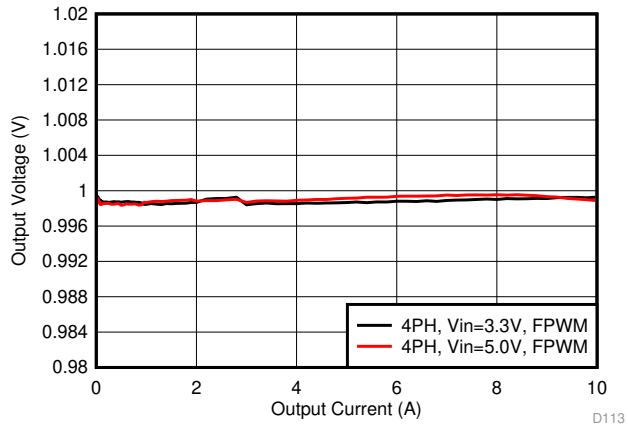

Figure 46. Output Voltage vs Load Current in Forced-PWM Mode (4-Phase Output)

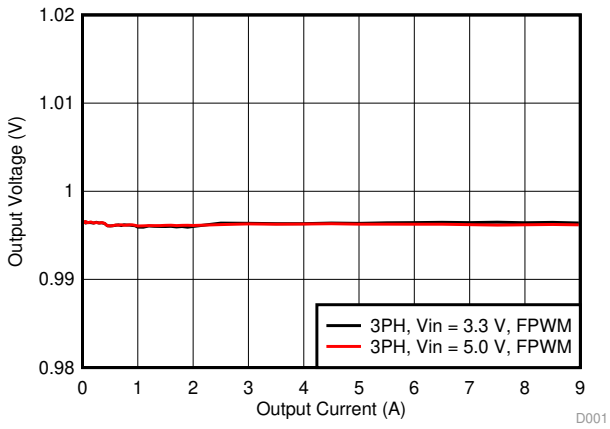

Figure 47. Output Voltage vs Load Current in Forced-PWM Mode (3-Phase Output)

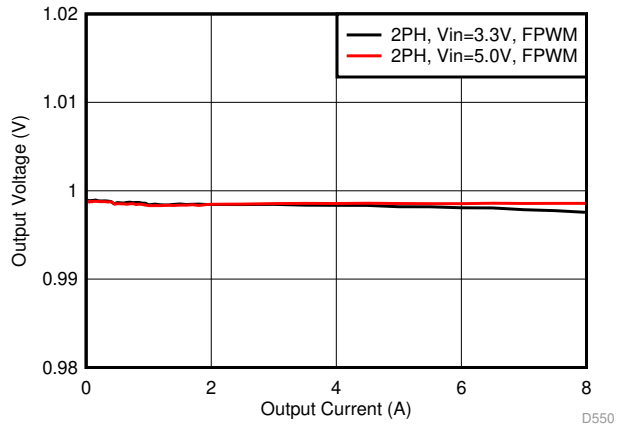

Figure 48. Output Voltage vs Load Current in Forced-PWM Mode (2-Phase Output)

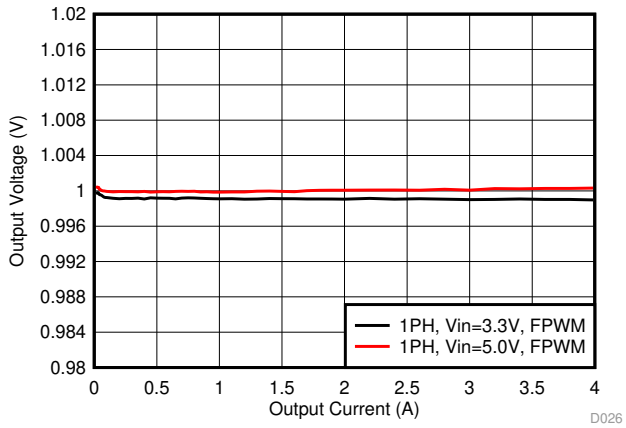

Figure 49. Output Voltage vs Load Current in Forced-PWM Mode (1-Phase Output)

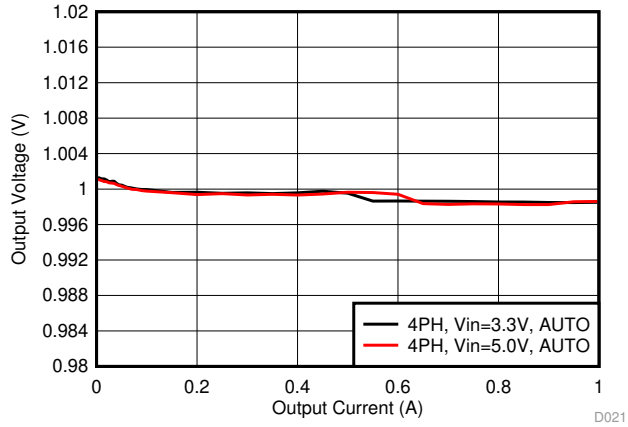

Figure 50. Output Voltage vs Load Current in PFM/PWM Mode (4-Phase Output)

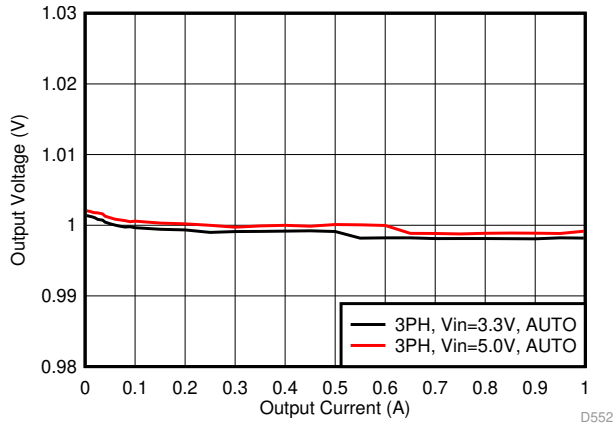

Figure 51. Output Voltage vs Load Current in PFM/PWM Mode (3-Phase Output)

Unless otherwise specified: V_{IN} = 3.7 V, V_{OUT} = 1 V, $V_{(NRST)}$ = 1.8 V, T_A = 25°C, f_{SW} = 2 MHz, L = 0.47 µH (TOKO DFE252012PD-R47M), C_{OUT} = 22 µF / phase, and C_{POL} = 22 µF / phase. Measurements are done using connections in the *Typical Applications* schematics.

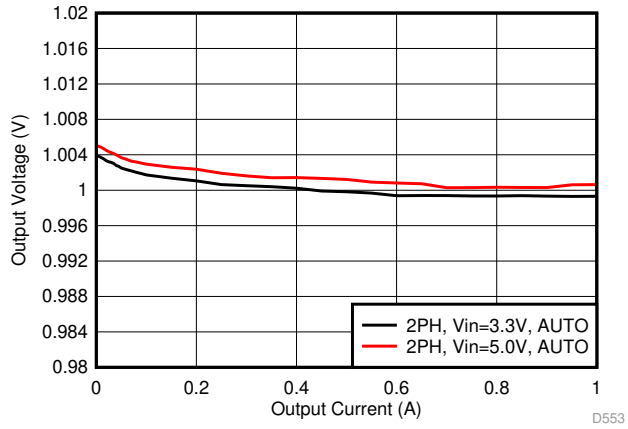

Figure 52. Output Voltage vs Load Current in PFM/PWM Mode (2-Phase Output)

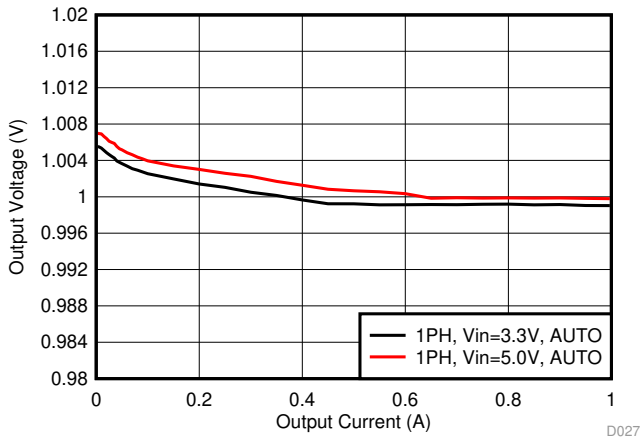

Figure 53. Output Voltage vs Load Current in PFM/PWM Mode (1-Phase Output)

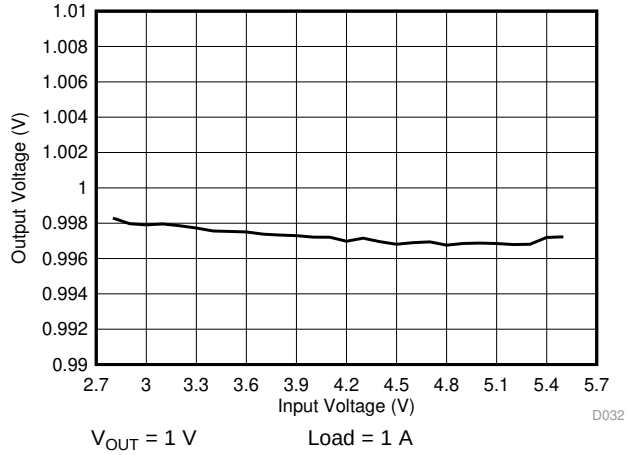

Figure 54. Output Voltage vs Input Voltage in PWM Mode (4-Phase Output)

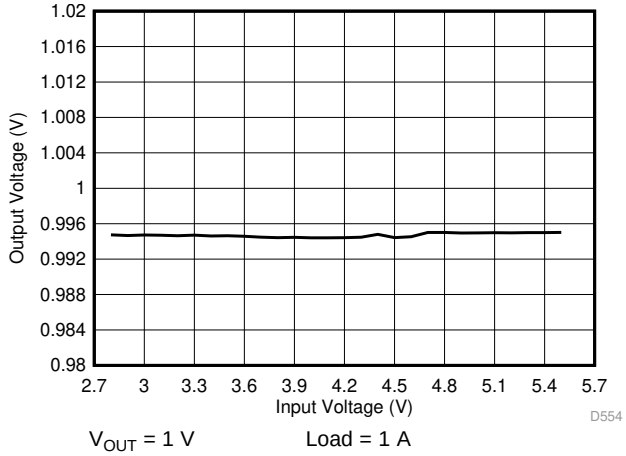

Figure 55. Output Voltage vs Input Voltage in PWM Mode (3-Phase Output)

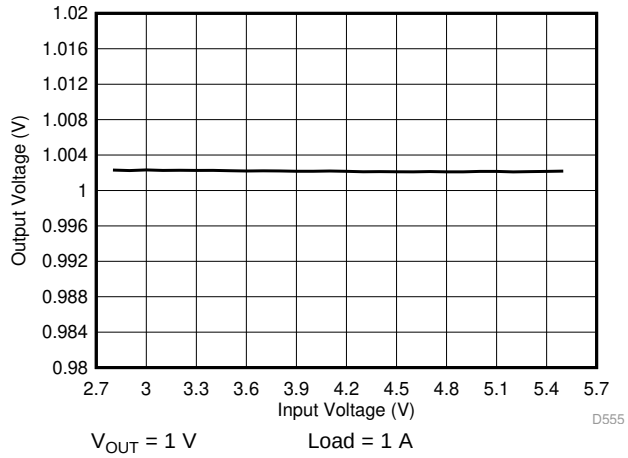

Figure 56. Output Voltage vs Input Voltage in PWM Mode (2-Phase Output)

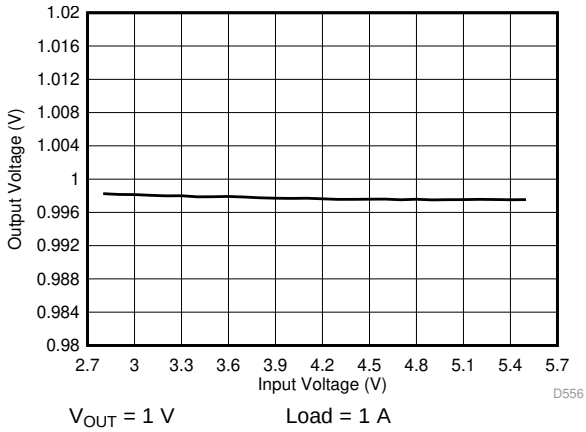

Figure 57. Output Voltage vs Input Voltage in PWM Mode (1-Phase Output)

Copyright © 2018, Texas Instruments Incorporated

Unless otherwise specified: V_{IN} = 3.7 V, V_{OUT} = 1 V, $V_{(NRST)}$ = 1.8 V, T_A = 25°C, f_{SW} = 2 MHz, L = 0.47 µH (TOKO DFE252012PD-R47M), C_{OUT} = 22 µF / phase, and C_{POL} = 22 µF / phase. Measurements are done using connections in the *Typical Applications* schematics.

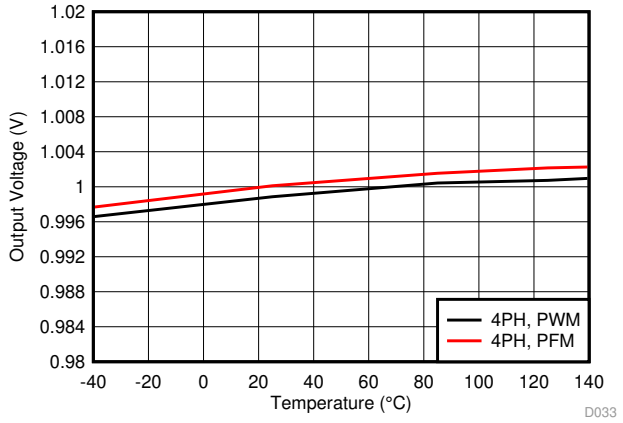

Load = 4 A (PWM) and 0.1 A (PFM)

Figure 58. Output Voltage vs Temperature (4-Phase Output)

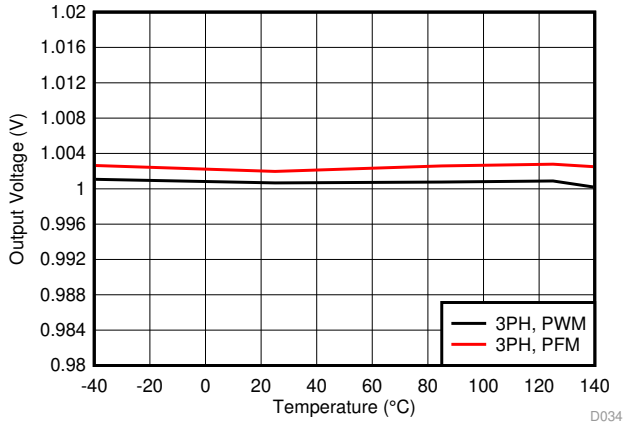

Load = 3 A (PWM) and 0.1 A (PFM)

Figure 59. Output Voltage vs Temperature (3-Phase Output)

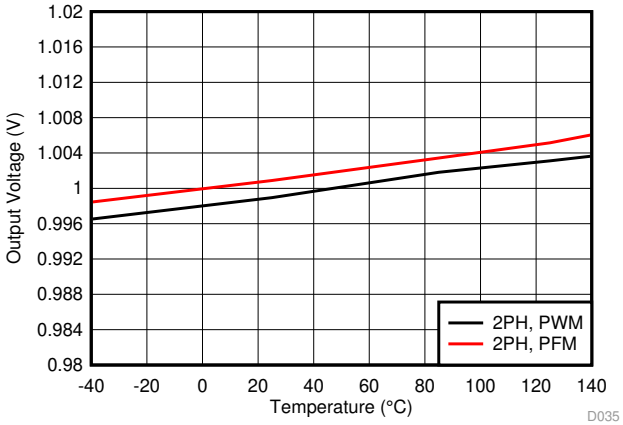

Load = 2 A (PWM) and 0.1 A (PFM)

Figure 60. Output Voltage vs Temperature (2-Phase Output)

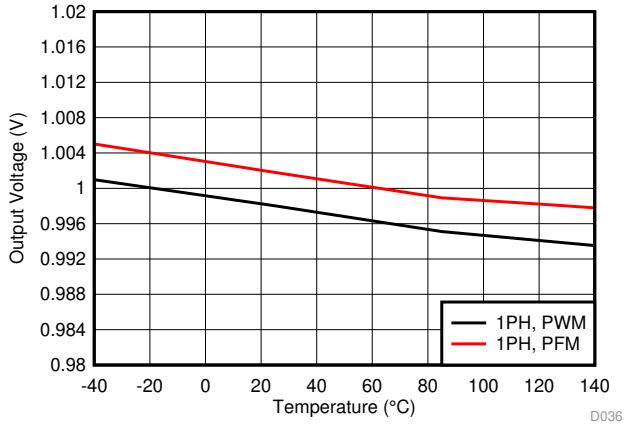

Load = 1 A (PWM) and 0.1 A (PFM)

Figure 61. Output Voltage vs Temperature (1-Phase Output)

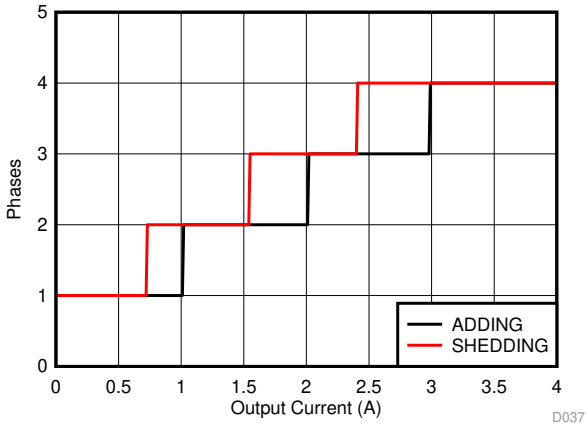

Figure 62. Phase Adding and Shedding vs Load Current (4-Phase Output)

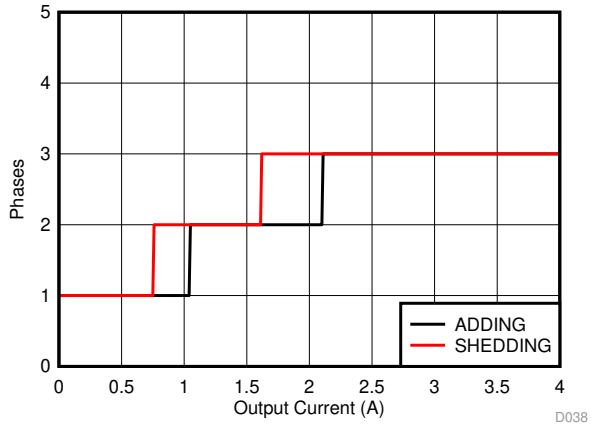

Figure 63. Phase Adding and Shedding vs Load Current (3-Phase Output)

Unless otherwise specified: V_{IN} = 3.7 V, V_{OUT} = 1 V, $V_{(NRST)}$ = 1.8 V, T_A = 25°C, f_{SW} = 2 MHz, L = 0.47 µH (TOKO DFE252012PD-R47M), C_{OUT} = 22 µF / phase, and C_{POL} = 22 µF / phase. Measurements are done using connections in the *Typical Applications* schematics.

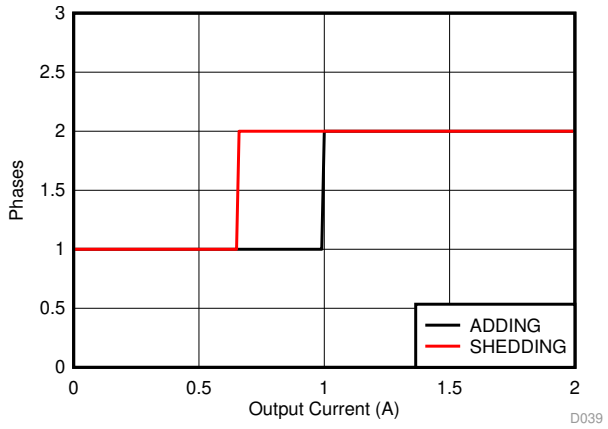

Figure 64. Phase Adding and Shedding vs Load Current (2-Phase Output)

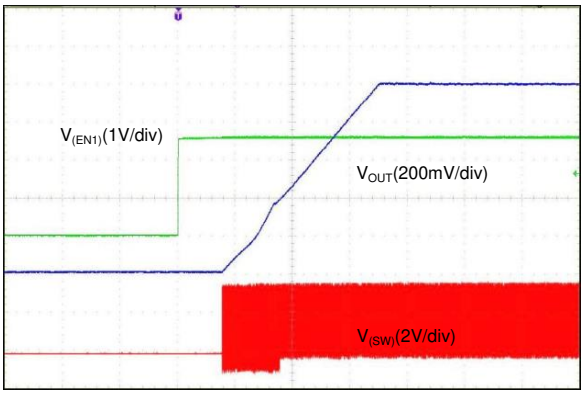

I_{OUT} = 0 A Slew-Rate = 3.8 mV/µs

Figure 65. Start-Up With EN1, Forced PWM (4-Phase Output)

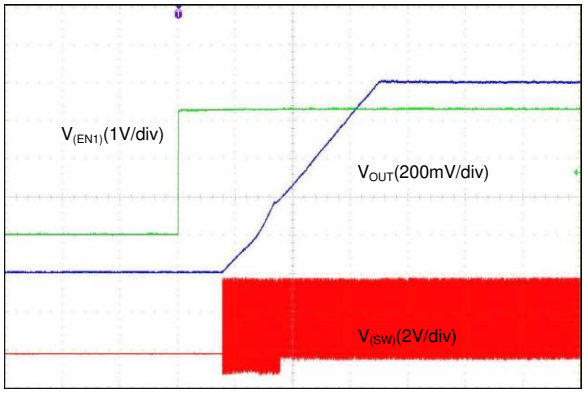

I_{OUT} = 0 A Slew-Rate = 3.8 mV/µs

Figure 66. Start-Up With EN1, Forced PWM (3-Phase Output)

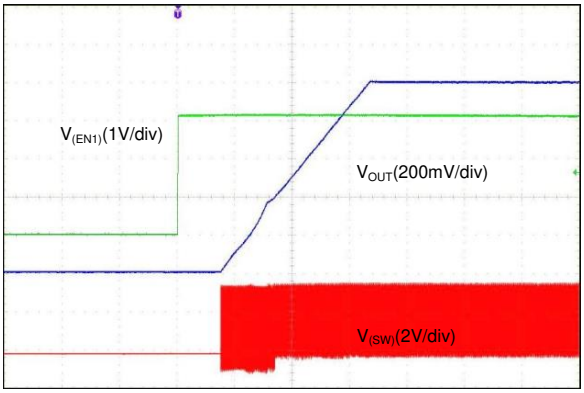

I_{OUT} = 0 A Slew-Rate = 3.8 mV/µs

Figure 67. Start-Up With EN1, Forced PWM (2-Phase Output)

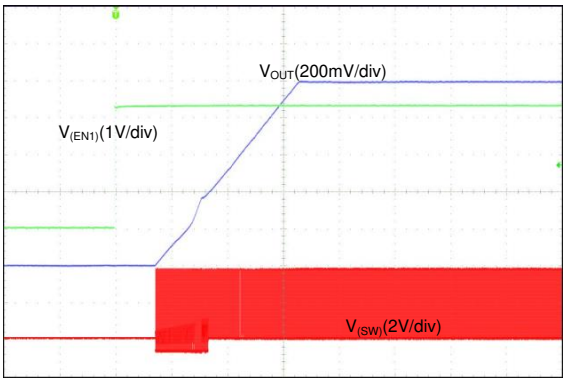

I_{OUT} = 0 A Slew-Rate = 3.8 mV/µs

Figure 68. Start-Up With EN1, Forced PWM (1-Phase Output)

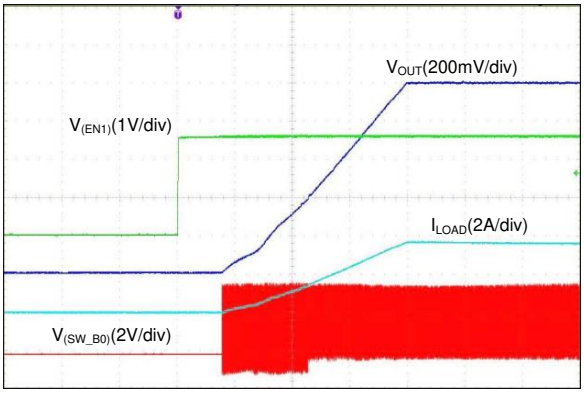

R_{LOAD} = 0.25 Ω Slew-Rate = 3.8 mV/µs

Figure 69. Start-Up With EN1, Forced PWM (4-Phase Output)

Copyright © 2018, Texas Instruments Incorporated

Unless otherwise specified: V_{IN} = 3.7 V, V_{OUT} = 1 V, $V_{(NRST)}$ = 1.8 V, T_A = 25°C, f_{SW} = 2 MHz, L = 0.47 µH (TOKO DFE252012PD-R47M), C_{OUT} = 22 µF / phase, and C_{POL} = 22 µF / phase. Measurements are done using connections in the *Typical Applications* schematics.

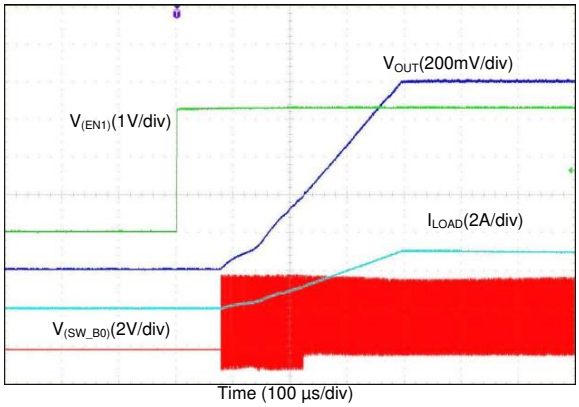

R_{LOAD} = 0.33 Ω Slew-Rate = 3.8 mV/µs

Figure 70. Start-Up With EN1, Forced PWM (3-Phase Output)

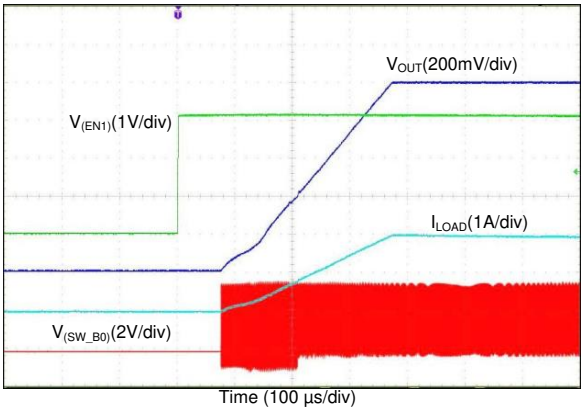

I_{OUT} = 0.5 Ω Slew-Rate = 3.8 mV/µs

Figure 71. Start-Up With EN1, Forced PWM (2-Phase Output)

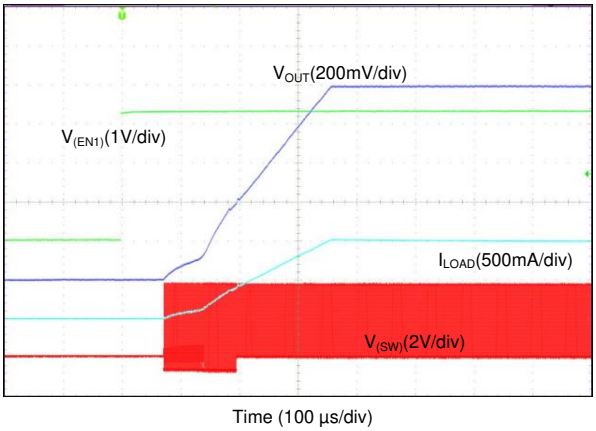

R_{LOAD} = 1 Ω Slew-Rate = 3.8 mV/µs

Figure 72. Start-Up With EN1, Forced PWM (1-Phase Output)

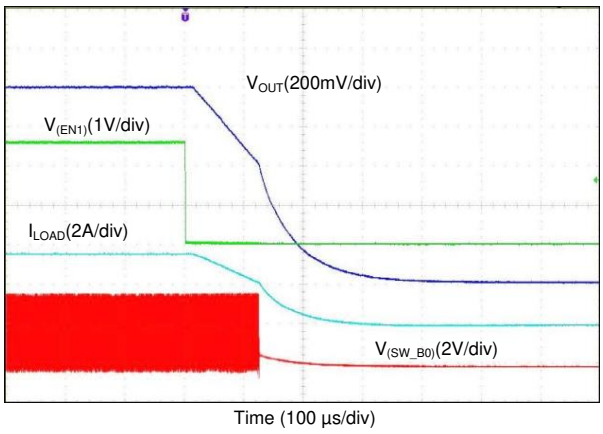

R_{LOAD} = 0.25 Ω Slew-Rate = 3.8 mV/µs

Figure 73. Shutdown With EN1, Forced PWM (4-Phase Output)

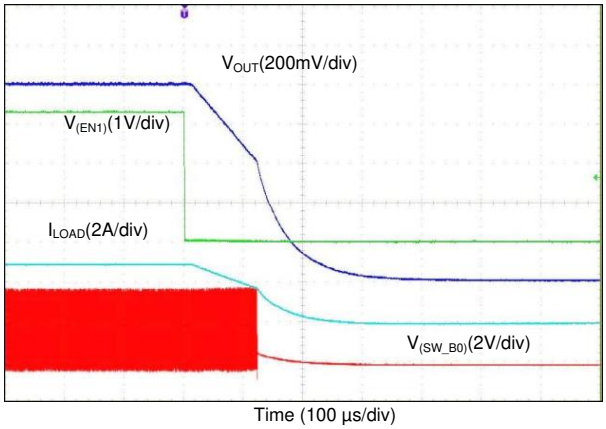

R_{LOAD} = 0.33 Ω Slew-Rate = 3.8 mV/µs

Figure 74. Shutdown With EN1, Forced PWM (3-Phase Output)

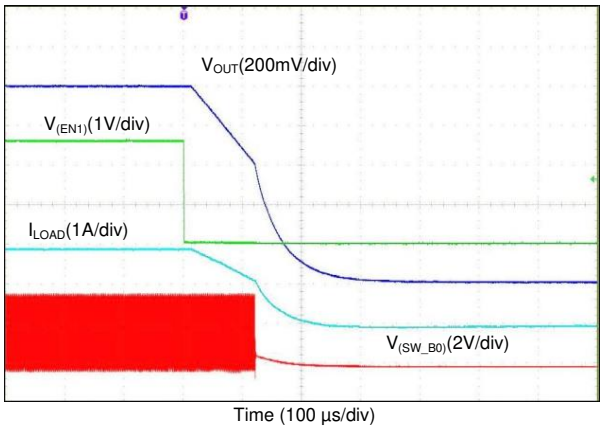

I_{OUT} = 0.5 Ω Slew-Rate = 3.8 mV/µs

Figure 75. Shutdown With EN1, Forced PWM (2-Phase Output)

Unless otherwise specified: V_{IN} = 3.7 V, V_{OUT} = 1 V, $V_{(NRST)}$ = 1.8 V, T_A = 25°C, f_{SW} = 2 MHz, L = 0.47 µH (TOKO DFE252012PD-R47M), C_{OUT} = 22 µF / phase, and C_{POL} = 22 µF / phase. Measurements are done using connections in the *Typical Applications* schematics.

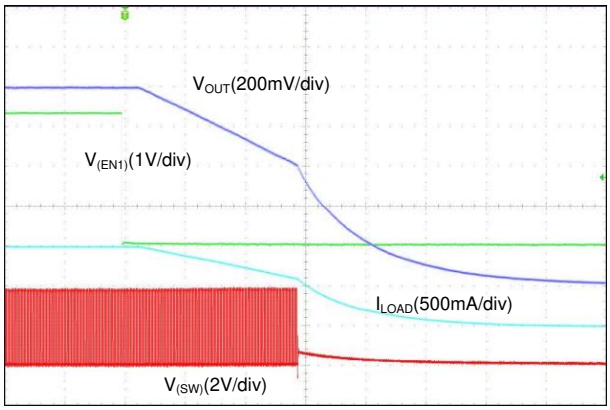

Time (40 µs/div)

R_{LOAD} = 1 Ω Slew-Rate = 3.8 mV/µs

Figure 76. Shutdown With EN1, Forced PWM (1-Phase Output)

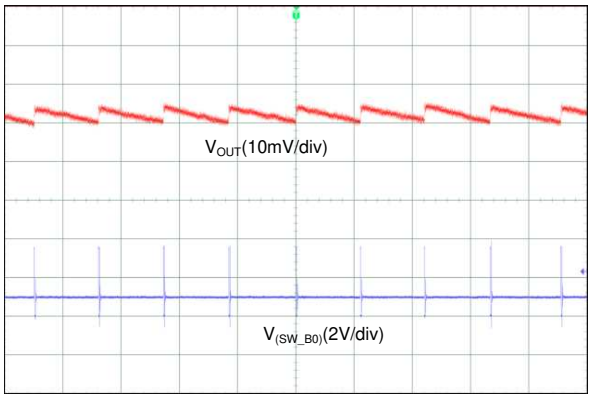

Time (40 µs/div)

I_{OUT} = 10 mA

Figure 77. Output Voltage Ripple, PFM Mode (4-Phase Output)

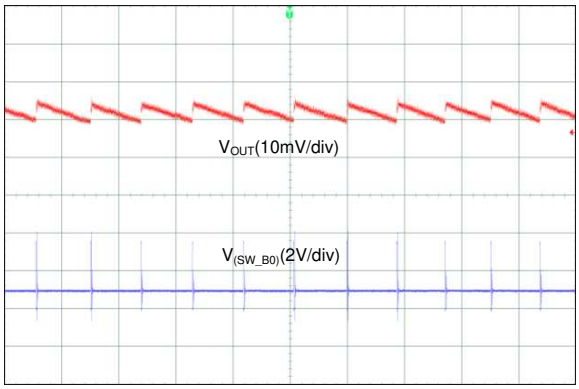

Time (40 µs/div)

I_{OUT} = 10 mA

Figure 78. Output Voltage Ripple, PFM Mode (3-Phase Output)

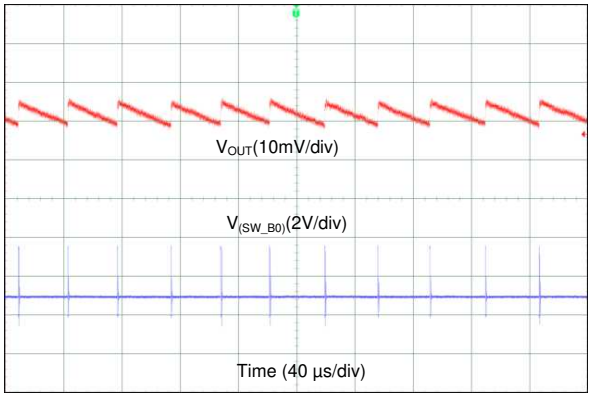

I_{OUT} = 10 mA

Figure 79. Output Voltage Ripple, PFM Mode (2-Phase Output)

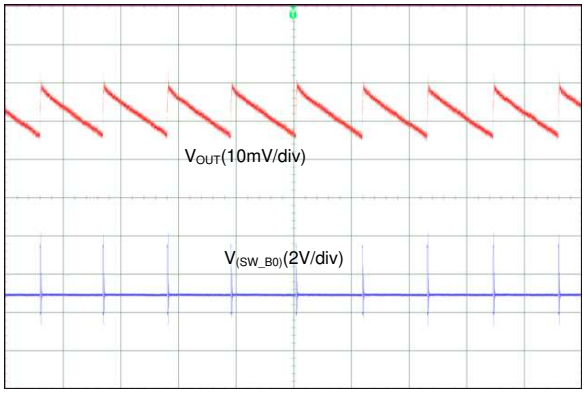

Time (40 µs/div)

I_{OUT} = 10 mA

Figure 80. Output Voltage Ripple, PFM Mode (1-Phase Output)

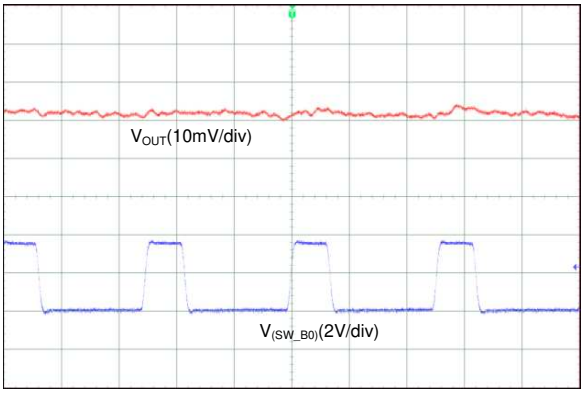

Time (200 ns/div)

I_{OUT} = 200 mA

Figure 81. Output Voltage Ripple, Forced-PWM Mode (4-Phase Output)

Copyright © 2018, Texas Instruments Incorporated

Unless otherwise specified: V_{IN} = 3.7 V, V_{OUT} = 1 V, $V_{(NRST)}$ = 1.8 V, T_A = 25°C, f_{SW} = 2 MHz, L = 0.47 µH (TOKO DFE252012PD-R47M), C_{OUT} = 22 µF / phase, and C_{POL} = 22 µF / phase. Measurements are done using connections in the *Typical Applications* schematics.

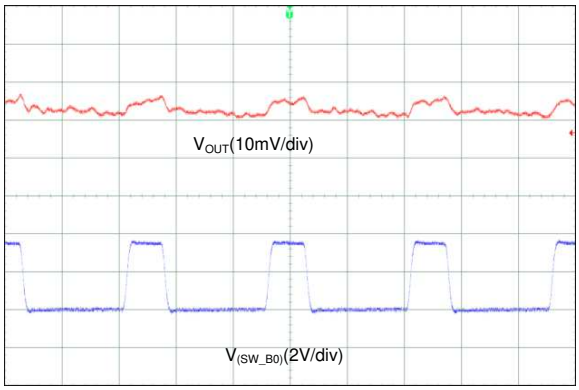

I_{OUT} = 200 mA

Figure 82. Output Voltage Ripple, Forced-PWM Mode (3-Phase Output)

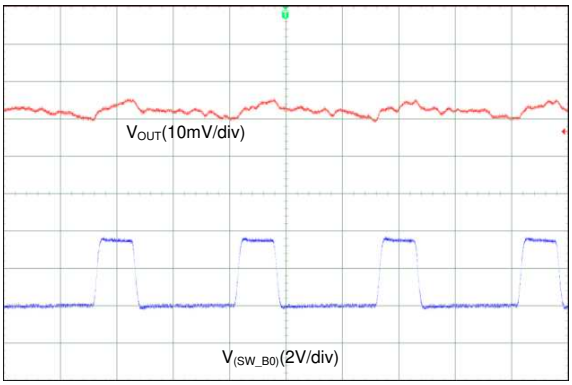

I_{OUT} = 200 mA

Figure 83. Output Voltage Ripple, Forced-PWM Mode (2-Phase Output)

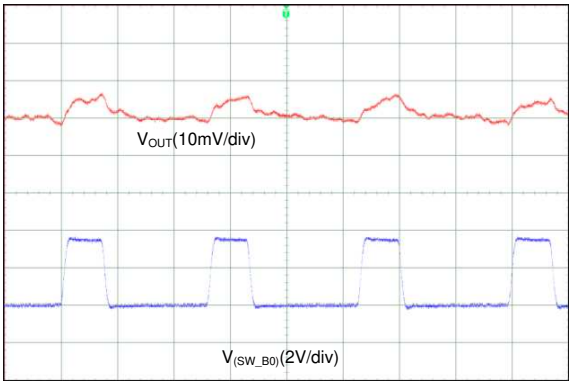

I_{OUT} = 200 mA

Figure 84. Output Voltage Ripple, Forced-PWM Mode (1-Phase Output)

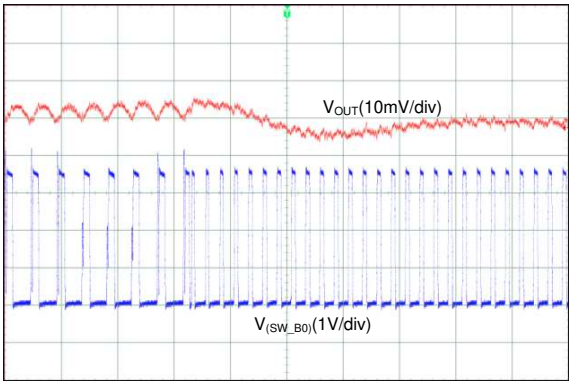

Figure 85. Transient from PFM-to-PWM Mode (4-Phase Output)

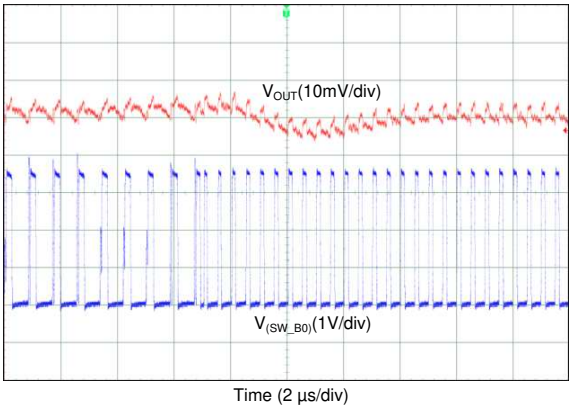

Figure 86. Transient from PFM-to-PWM Mode (3-Phase Output)

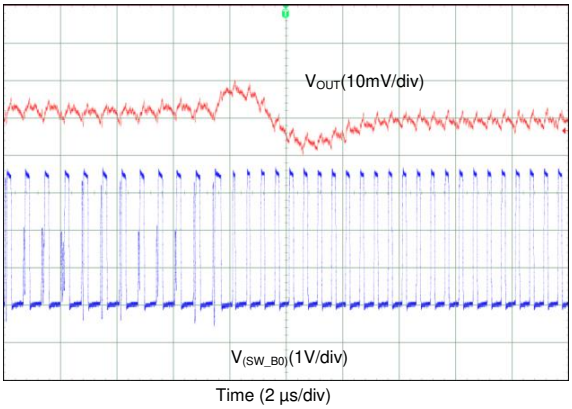

Figure 87. Transient from PFM-to-PWM Mode (2-Phase Output)

Unless otherwise specified: V_{IN} = 3.7 V, V_{OUT} = 1 V, $V_{(NRST)}$ = 1.8 V, T_A = 25°C, f_{SW} = 2 MHz, L = 0.47 µH (TOKO DFE252012PD-R47M), C_{OUT} = 22 µF / phase, and C_{POL} = 22 µF / phase. Measurements are done using connections in the *Typical Applications* schematics.

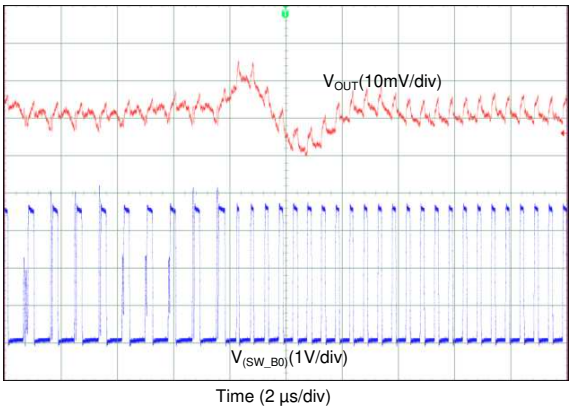

Figure 88. Transient from PFM-to-PWM Mode (1-Phase Output)

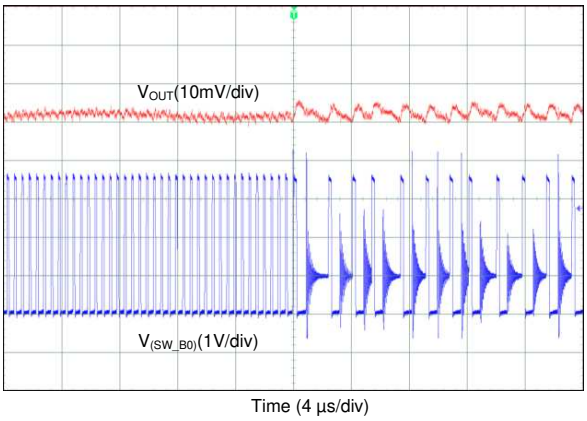

Figure 89. Transient from PWM-to-PFM Mode (4-Phase Output)

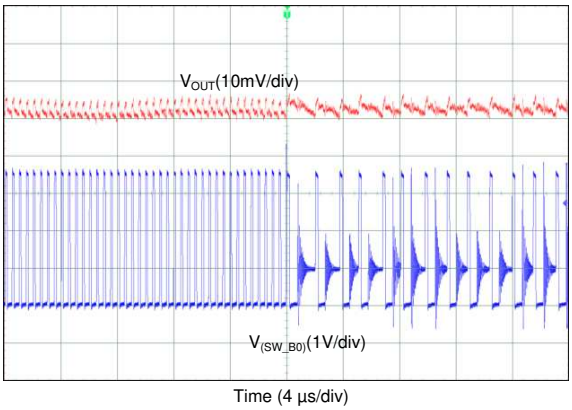

Figure 90. Transient from PWM-to-PFM Mode (3-Phase Output)

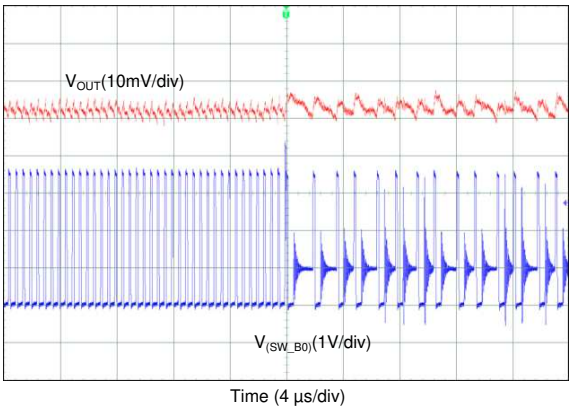

Figure 91. Transient from PWM-to-PFM Mode (2-Phase Output)

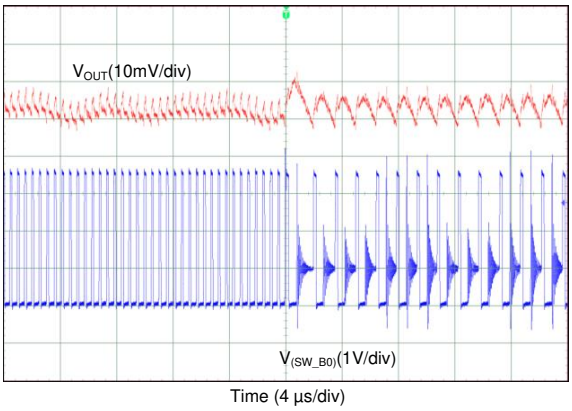

Figure 92. Transient from PWM-to-PFM Mode (1-Phase Output)

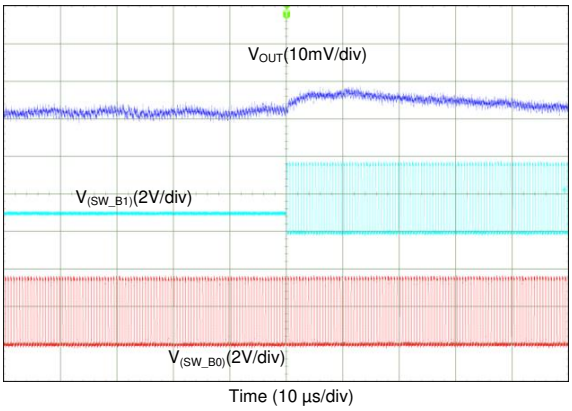

Figure 93. Transient from 1-Phase to 2-Phase Operation (4-Phase Output)

Copyright © 2018, Texas Instruments Incorporated

Unless otherwise specified: V_{IN} = 3.7 V, V_{OUT} = 1 V, $V_{(NRST)}$ = 1.8 V, T_A = 25°C, f_{SW} = 2 MHz, L = 0.47 µH (TOKO DFE252012PD-R47M), C_{OUT} = 22 µF / phase, and C_{POL} = 22 µF / phase. Measurements are done using connections in the *Typical Applications* schematics.

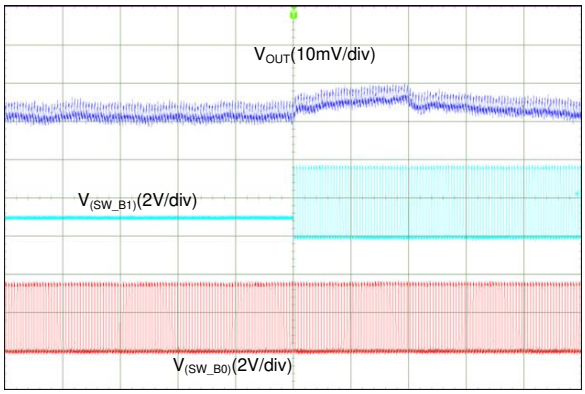

Figure 94. Transient from 1-Phase to 2-Phase Operation (3-Phase Output)

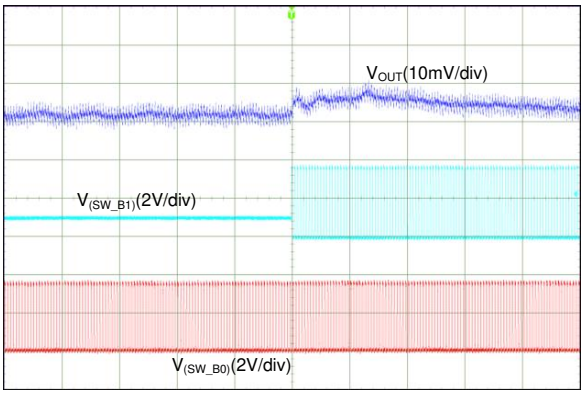

Figure 95. Transient from 1-Phase to 2-Phase Operation (2-Phase Output)

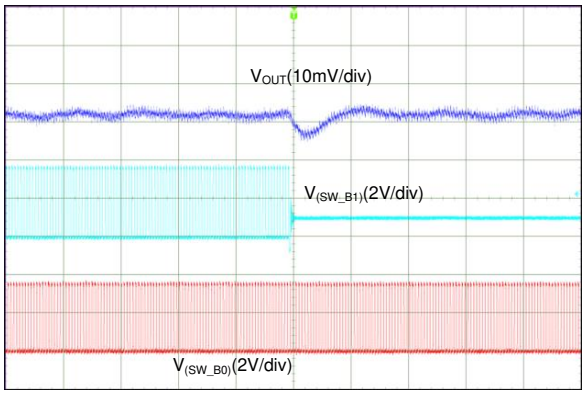

Figure 96. Transient from 2-Phase to 1-Phase Operation (4-Phase Output)

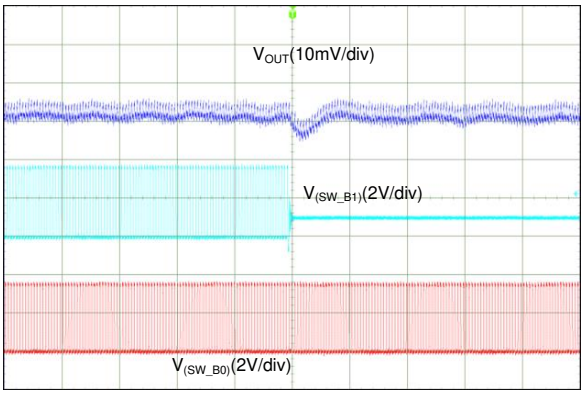

Figure 97. Transient from 2-Phase to 1-Phase Operation (3-Phase Output)

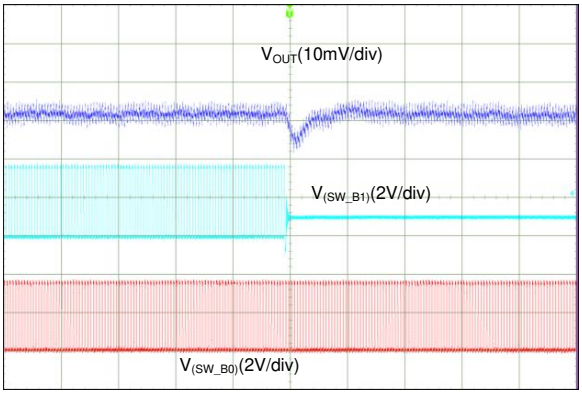

Figure 98. Transient from 2-Phase to 1-Phase Operation (2-Phase Output)

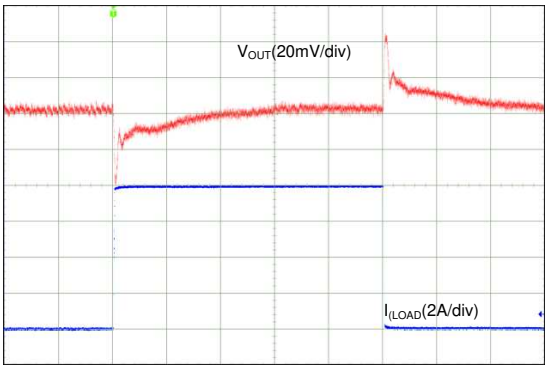

I_{OUT} = 0.1 A → 8 A → 0.1 A

T_R = T_F = 1 µs

Figure 99. Transient Load Step Response, AUTO Mode (4-Phase Output)

Unless otherwise specified: V_{IN} = 3.7 V, V_{OUT} = 1 V, $V_{(NRST)}$ = 1.8 V, T_A = 25°C, f_{SW} = 2 MHz, L = 0.47 µH (TOKO DFE252012PD-R47M), C_{OUT} = 22 µF / phase, and C_{POL} = 22 µF / phase. Measurements are done using connections in the *Typical Applications* schematics.

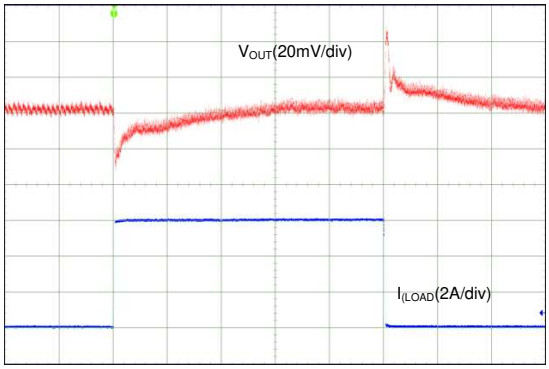

Time (40 µs/div)
I_{OUT} = 0.1 A → 6 A → 0.1 A
T_R = T_F = 1 µs

Figure 100. Transient Load Step Response, AUTO Mode (3-Phase Output)

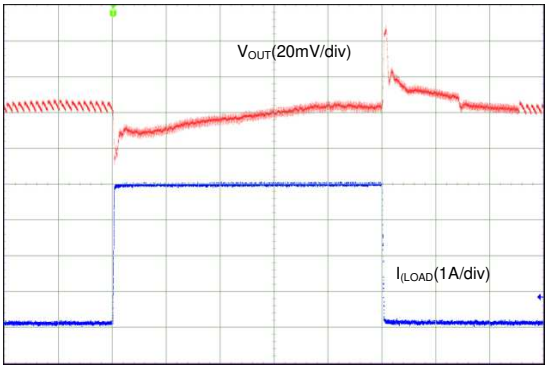

Time (40 µs/div)
I_{OUT} = 0.1 A → 4 A → 0.1 A
T_R = T_F = 1 µs

Figure 101. Transient Load Step Response, AUTO Mode (2-Phase Output)

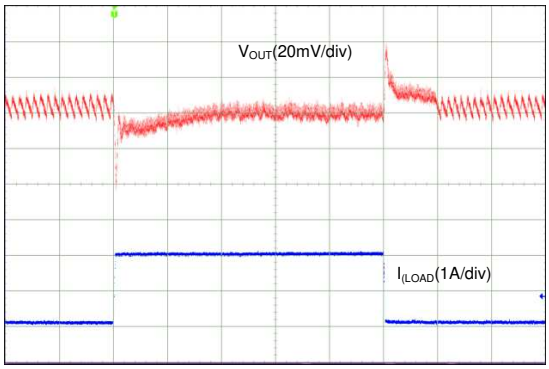

Time (40 µs/div)
I_{OUT} = 0.1 A → 2 A → 0.1 A
T_R = T_F = 1 µs

Figure 102. Transient Load Step Response, AUTO Mode (1-Phase Output)

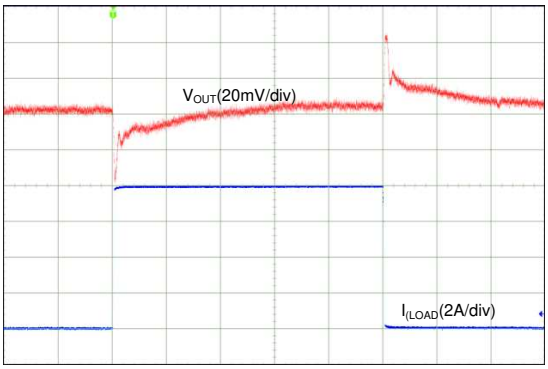

Time (40 µs/div)
I_{OUT} = 0.1 A → 8 A → 0.1 A
T_R = T_F = 1 µs

Figure 103. Transient Load Step Response, Forced-PWM Mode (4-Phase Output)

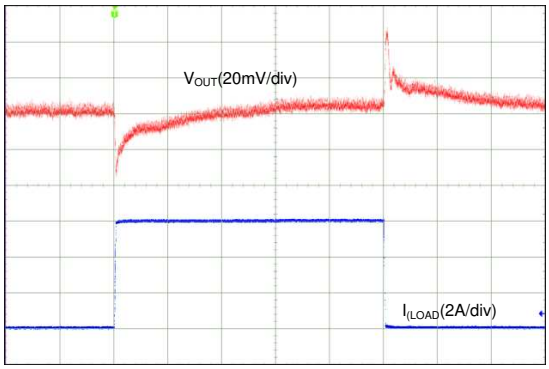

Time (40 µs/div)
I_{OUT} = 0.1 A → 6 A → 0.1 A
T_R = T_F = 1 µs

Figure 104. Transient Load Step Response, Forced-PWM Mode (3-Phase Output)

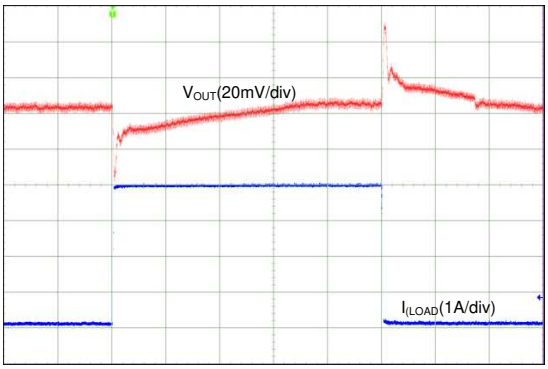

Time (40 µs/div)
I_{OUT} = 0.1 A → 4 A → 0.1 A
T_R = T_F = 1 µs

Figure 105. Transient Load Step Response, Forced-PWM Mode (2-Phase Output)

Copyright © 2018, Texas Instruments Incorporated

Unless otherwise specified: V_{IN} = 3.7 V, V_{OUT} = 1 V, $V_{(NRST)}$ = 1.8 V, T_A = 25°C, f_{SW} = 2 MHz, L = 0.47 µH (TOKO DFE252012PD-R47M), C_{OUT} = 22 µF / phase, and C_{POL} = 22 µF / phase. Measurements are done using connections in the *Typical Applications* schematics.

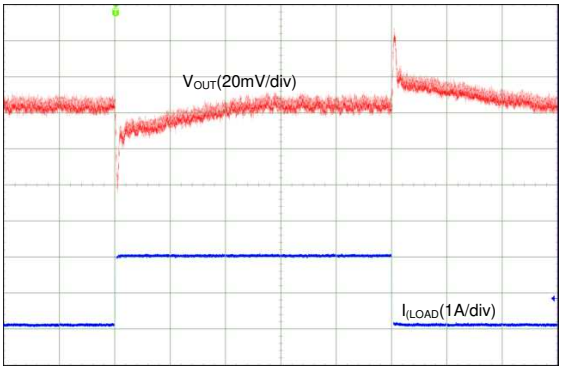

Time (40 µs/div)

I_{OUT} = 0.1 A → 2 A → 0.1 A

T_R = T_F = 1 µs

Figure 106. Transient Load Step Response, Forced-PWM Mode (1-Phase Output)

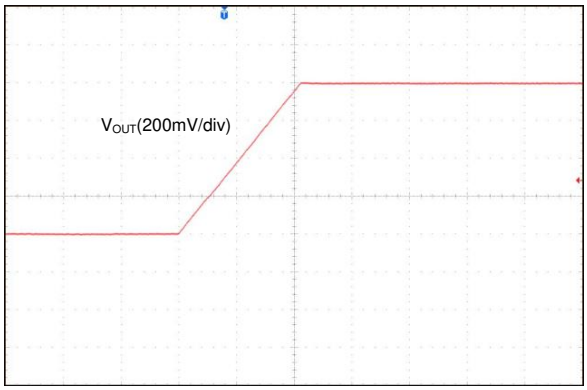

Time (100 µs/div)

Figure 107. Output Voltage Transition from 0.6 V to 1.4 V

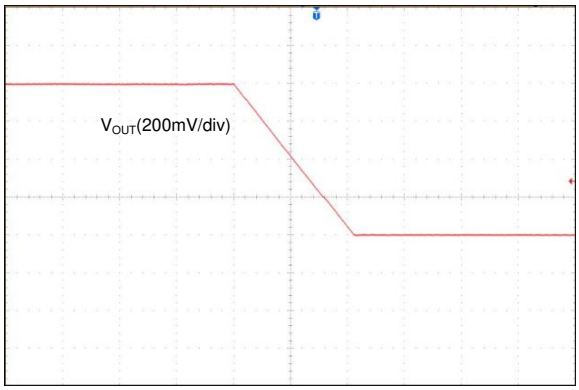

Time (100 µs/div)

Figure 108. Output Voltage Transition from 1.4 V to 0.6 V

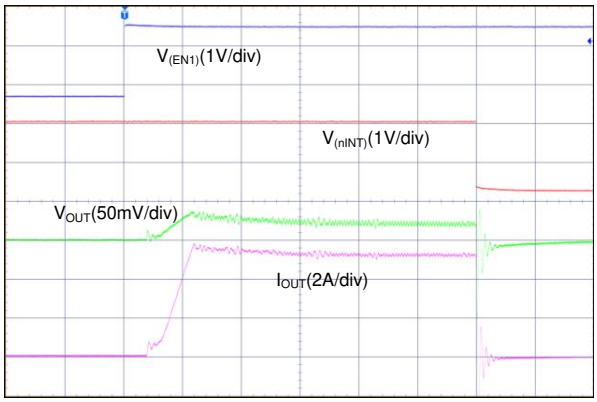

Time (200 µs/div)

Figure 109. Start-Up With Short on Output (4-Phase Output)

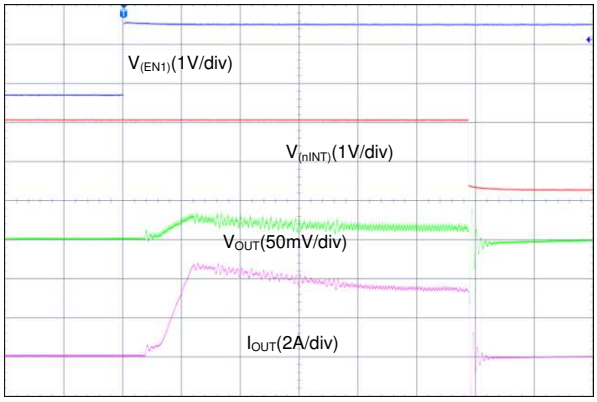

Time (200 µs/div)

Figure 110. Start-Up With Short on Output (3-Phase Output)

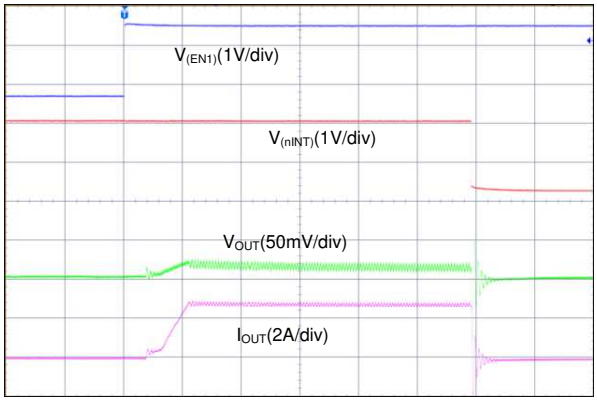

Time (200 µs/div)

Figure 111. Start-Up With Short on Output (2-Phase Output)

Unless otherwise specified: V_{IN} = 3.7 V, V_{OUT} = 1 V, $V_{(NRST)}$ = 1.8 V, T_A = 25°C, f_{SW} = 2 MHz, L = 0.47 µH (TOKO DFE252012PD-R47M), C_{OUT} = 22 µF / phase, and C_{POL} = 22 µF / phase. Measurements are done using connections in the *Typical Applications* schematics.

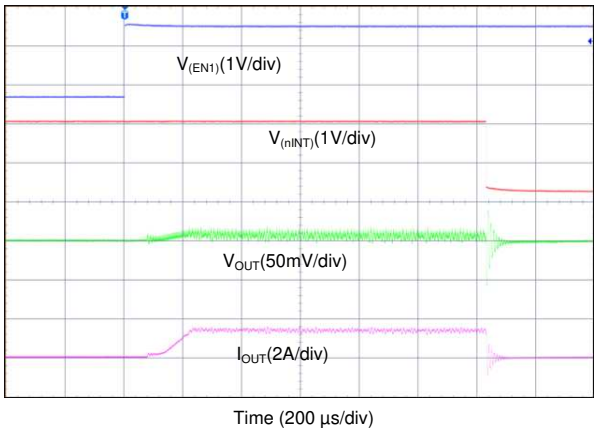

Figure 112. Start-Up With Short on Output (1-Phase Output)

10 Power Supply Recommendations

The device is designed to operate from an input voltage supply range from 2.8 V and 5.5 V. This input supply must be well regulated and can withstand maximum input current and keep a stable voltage without voltage drop even at load transition condition. The resistance of the input supply rail must be low enough that the input current transient does not cause too high drop in the LP8752x-Q1 supply voltage that can cause false UVLO fault triggering. If the input supply is located more than a few inches from the LP8752x-Q1 additional bulk capacitance may be required in addition to the ceramic bypass capacitors.

Copyright © 2018, Texas Instruments Incorporated

11 Layout

11.1 Layout Guidelines

The high frequency and large switching currents of the LP8752x-Q1 make the choice of layout important. Good power supply results only occur when care is given to correct design and layout. Layout affects noise pickup and generation and can cause a good design to perform with less-than-expected results. With a range of output currents from milliamps to 10 A, good power supply layout is much more difficult than most general PCB design. Use the following steps as a reference to make sure the device is stable and keeps correct voltage and current regulation across its intended operating voltage and current range.

- Place C_{IN} as close as possible to the VIN_Bx pin and the PGND_Bxx pin. Route the V_{IN} trace wide and thick to avoid IR drops. The trace between the positive node of the input capacitor and the VIN_Bx pin(s) of LP8752x-Q1, as well as the trace between the negative node of the input capacitor and power PGND_Bxx pin(s), must be kept as short as possible. The input capacitance provides a low-impedance voltage source for the switching converter. The inductance of the connection is the most important parameter of a local decoupling capacitor — parasitic inductance on these traces must be kept as small as possible for correct device operation. The parasitic inductance can be decreased by using a ground plane as close as possible to top layer by using thin dielectric layer between top layer and ground plane.
- The output filter, consisting of COUT and L, converts the switching signal at SW_Bx to the noiseless output voltage. It must be placed as close as possible to the device keeping the switch node small, for best EMI behavior. Route the traces between the LP8752x-Q1 output capacitors and the load direct and wide to avoid losses due to the IR drop.
- Input for analog blocks (VANA and AGND) must be isolated from noisy signals. Connect VANA directly to a quiet system voltage node and AGND to a quiet ground point where no IR drop occurs. Place the decoupling capacitor as close as possible to the VANA pin.
- If the processor load supports remote voltage sensing, connect the feedback pins FB_Bx of the LP8752x-Q1 device to the respective sense pins on the processor. The sense lines are susceptible to noise. They must be kept away from noisy signals such as PGND_Bxx, VIN_Bx, and SW_Bx, as well as high bandwidth signals such as the I^2C. Avoid both capacitive and inductive coupling by keeping the sense lines short, direct, and close to each other. Run the lines in a quiet layer. Isolate them from noisy signals by a voltage or ground plane if possible. Running the signal as a differential pair is recommended for multiphase outputs. If series resistors are used for load current measurement, place them after connection of the voltage feedback.
- PGND_Bxx, VIN_Bx and SW_Bx must be routed on thick layers. They must not surround inner signal layers, which are cannot withstand interference from noisy PGND_Bxx, VIN_Bx and SW_Bx.
- If the input voltage is above 4 V, place snubber components (capacitor and resistor) between SW_Bx and ground on all four phases. The components can be also placed to the other side of the board if there are area limitations and the routing traces can be kept short.

Due to the small package of this converter and the overall small solution size, the thermal performance of the PCB layout is important. Many system-dependent parameters such as thermal coupling, airflow, added heat sinks and convection surfaces, and the presence of other heat-generating components affect the power dissipation limits of a given component. Correct PCB layout, focusing on thermal performance, results in lower die temperatures. Wide and thick power traces can sink dissipated heat. This can be improved further on multi-layer PCB designs with vias to different planes. This results in decreased junction-to-ambient ($R_{\theta JA}$) and junction-to-board ($R_{\theta JB}$) thermal resistances and thereby decreases the device junction temperature, T_J. TI strongly recommends doing a careful system-level 2D or full 3D dynamic thermal analysis at the beginning product design process, by using a thermal modeling analysis software.

11.2 Layout Example

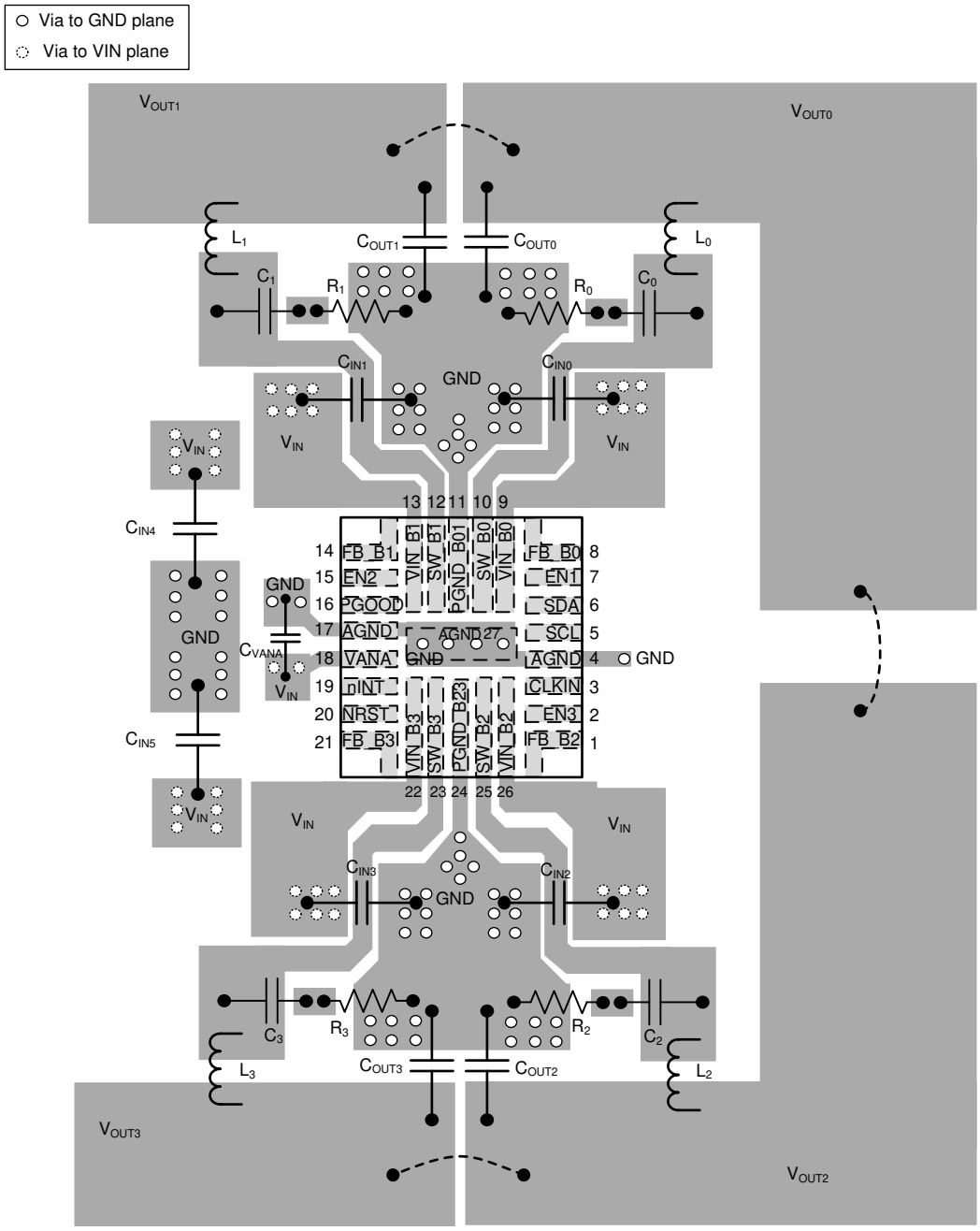

(1) The output voltage rails are shorted together based on the configuration as shown in *Typical Applications*.

Figure 113. LP8752x-Q1 Board Layout

Copyright © 2018, Texas Instruments Incorporated

12 Device and Documentation Support

12.1 Device Support

12.1.1 Third-Party Products Disclaimer

TI'S PUBLICATION OF INFORMATION REGARDING THIRD-PARTY PRODUCTS OR SERVICES DOES NOT CONSTITUTE AN ENDORSEMENT REGARDING THE SUITABILITY OF SUCH PRODUCTS OR SERVICES OR A WARRANTY, REPRESENTATION OR ENDORSEMENT OF SUCH PRODUCTS OR SERVICES, EITHER ALONE OR IN COMBINATION WITH ANY TI PRODUCT OR SERVICE.

12.2 Documentation Support

12.2.1 Related Documentation

For related documentation see the following:

TI User Guide *LP8752xQ1EVM Evaluation Module*

12.3 Related Links

The table below lists quick access links. Categories include technical documents, support and community resources, tools and software, and quick access to order now.

Table 15. Related Links

PARTS	PRODUCT FOLDER	ORDER NOW	TECHNICAL DOCUMENTS	TOOLS & SOFTWARE	SUPPORT & COMMUNITY
LP87521-Q1	Click here	Click here	Click here	Click here	Click here
LP87522-Q1	Click here	Click here	Click here	Click here	Click here
LP87523-Q1	Click here	Click here	Click here	Click here	Click here
LP87524-Q1	Click here	Click here	Click here	Click here	Click here
LP87525-Q1	Click here	Click here	Click here	Click here	Click here

12.4 Receiving Notification of Documentation Updates

To receive notification of documentation updates, navigate to the device product folder on ti.com. In the upper right corner, click on *Alert me* to register and receive a weekly digest of any product information that has changed. For change details, review the revision history included in any revised document.

12.5 Community Resources

TI E2E™ support forums are an engineer's go-to source for fast, verified answers and design help — straight from the experts. Search existing answers or ask your own question to get the quick design help you need.

Linked content is provided "AS IS" by the respective contributors. They do not constitute TI specifications and do not necessarily reflect TI's views; see TI's Terms of Use.

12.6 Trademarks

E2E is a trademark of Texas Instruments.
All other trademarks are the property of their respective owners.

12.7 Electrostatic Discharge Caution

This integrated circuit can be damaged by ESD. Texas Instruments recommends that all integrated circuits be handled with appropriate precautions. Failure to observe proper handling and installation procedures can cause damage.

ESD damage can range from subtle performance degradation to complete device failure. Precision integrated circuits may be more susceptible to damage because very small parametric changes could cause the device not to meet its published specifications.

12.8 Glossary

SLYZ022 — *TI Glossary*.

This glossary lists and explains terms, acronyms, and definitions.

13 Mechanical, Packaging, and Orderable Information

The following pages include mechanical, packaging, and orderable information. This information is the most current data available for the designated devices. This data is subject to change without notice and revision of this document. For browser-based versions of this data sheet, refer to the left-hand navigation.

Copyright © 2018, Texas Instruments Incorporated

PACKAGE OUTLINE

RNF0026C

VQFN-HR - 0.9 mm max height

PLASTIC QUAD FLATPACK - NO LEAD

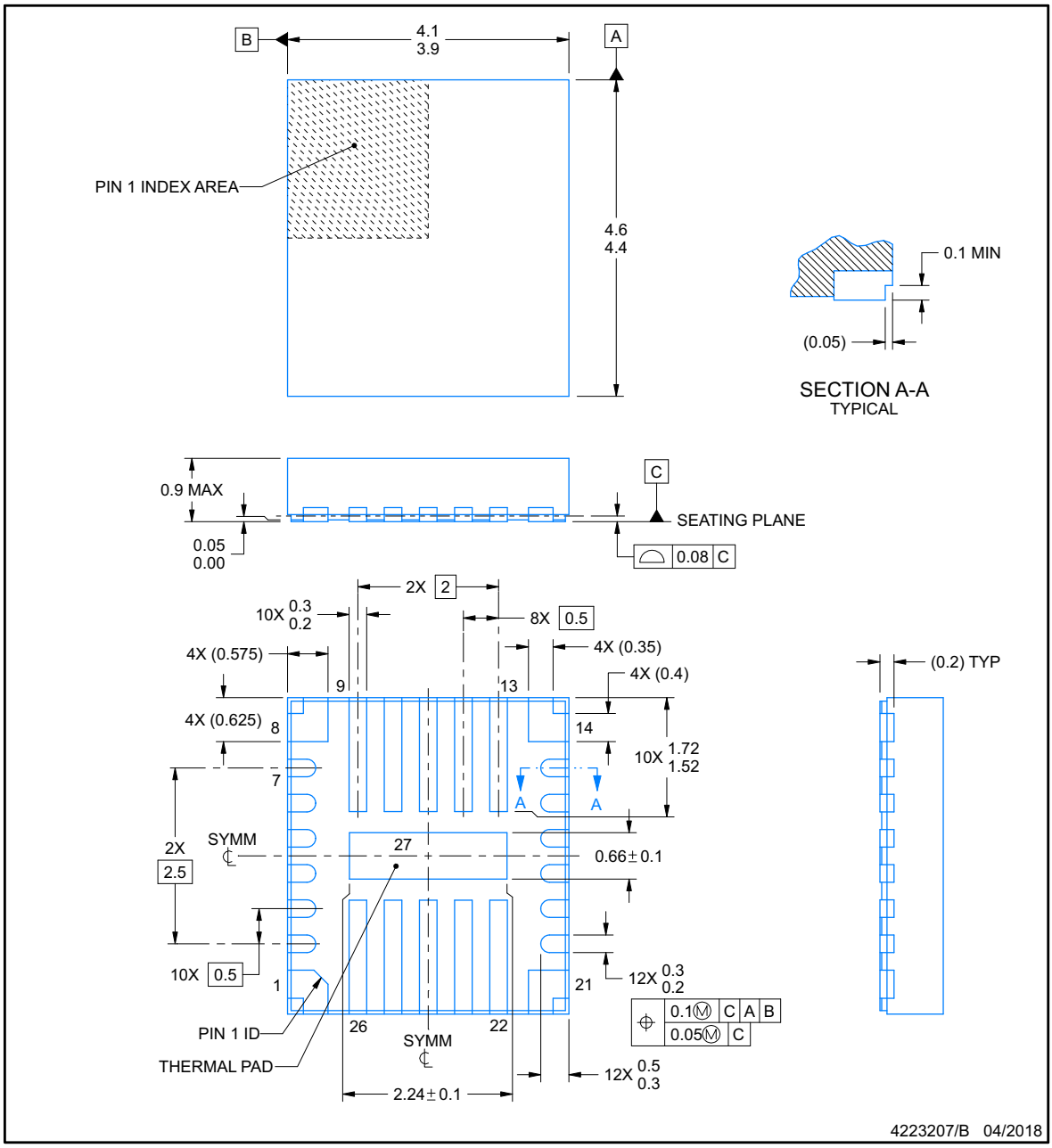

NOTES:

1. All linear dimensions are in millimeters. Any dimensions in parenthesis are for reference only. Dimensioning and tolerancing per ASME Y14.5M.
2. This drawing is subject to change without notice.
3. The package thermal pad must be soldered to the printed circuit board for thermal and mechanical performance.

Copyright © 2018, Texas Instruments Incorporated

EXAMPLE BOARD LAYOUT

RNF0026C

VQFN-HR - 0.9 mm max height

PLASTIC QUAD FLATPACK - NO LEAD

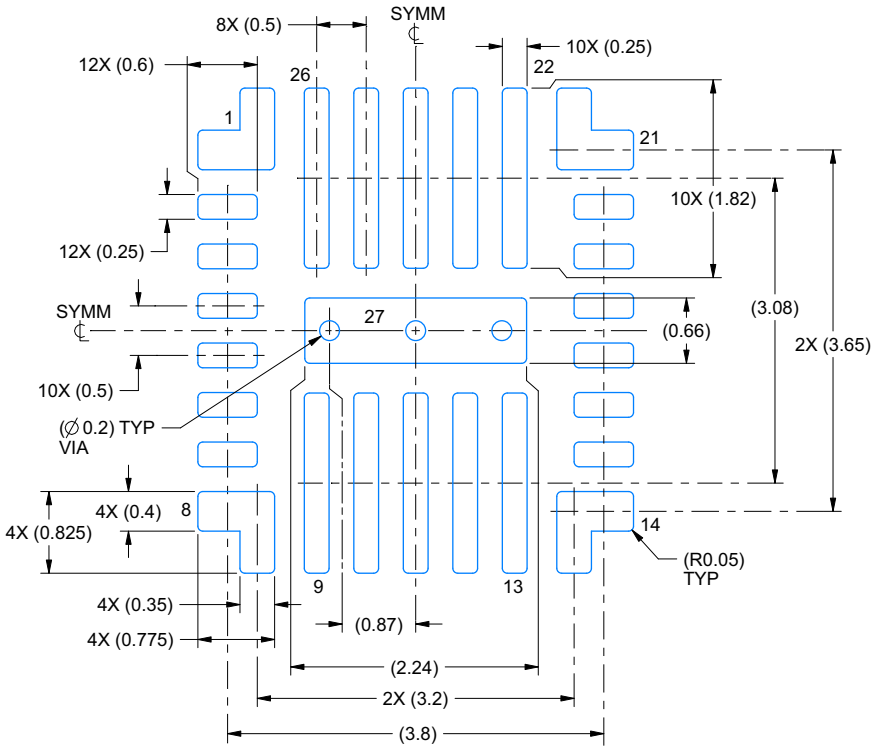

LAND PATTERN EXAMPLE
EXPOSED METAL SHOWN
SCALE:15X

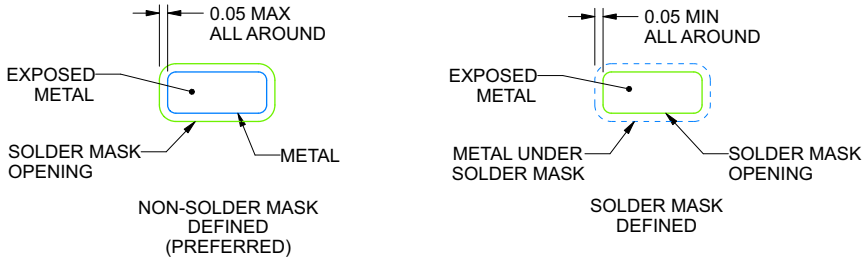

SOLDER MASK DETAIL
NOT TO SCALE

4223207/B 04/2018

NOTES: (continued)

4. This package is designed to be soldered to a thermal pad on the board. For more information, see Texas Instruments literature number SLUA271 (www.ti.com/lit/slua271).
5. Vias are optional depending on application, refer to device data sheet. If any vias are implemented, refer to their locations shown on this view. It is recommended that vias under paste be filled, plugged or tented.

Copyright © 2018, Texas Instruments Incorporated

EXAMPLE STENCIL DESIGN

RNF0026C **VQFN-HR - 0.9 mm max height**

PLASTIC QUAD FLATPACK - NO LEAD

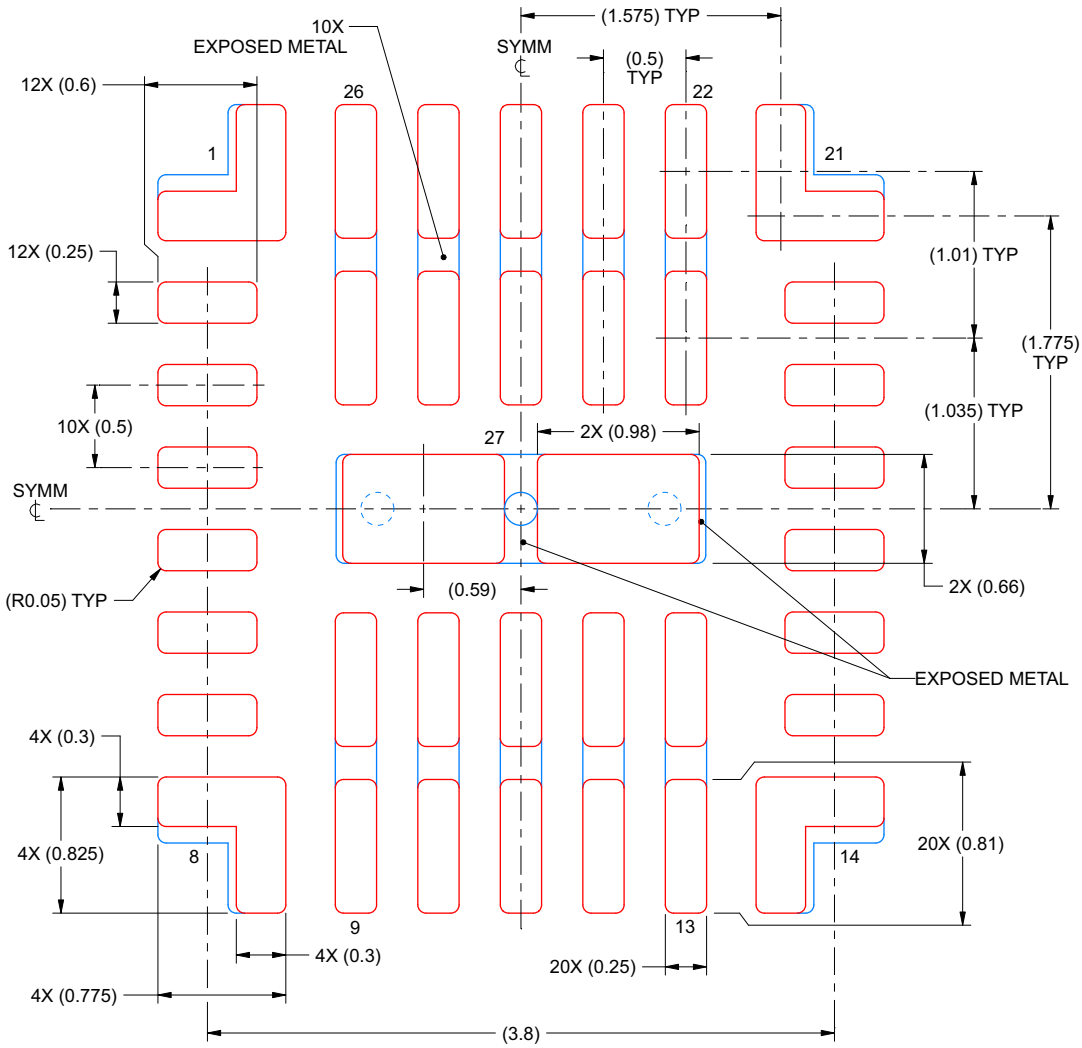

SOLDER PASTE EXAMPLE
BASED ON 0.125 mm THICK STENCIL

PRINTED SOLDER COVERAGE BY AREA UNDER PACKAGE
PADS 1, 8, 14 & 21: 87% - PADS 9-13 & 22-26: 88% - THERMAL PAD 27: 87%
SCALE:25X

4223207/B 04/2018

NOTES: (continued)

6. For alternate stencil design recommendations, see IPC-7525 or board assembly site preference.

Copyright © 2018, Texas Instruments Incorporated

PACKAGING INFORMATION

Orderable Device	Status (1)	Package Type	Package Drawing	Pins	Package Qty	Eco Plan (2)	Lead finish/ Ball material (6)	MSL Peak Temp (3)	Op Temp (°C)	Device Marking (4/5)	Samples
LP87521ERNFRQ1	ACTIVE	VQFN-HR	RNF	26	3000	RoHS-Exempt & Green	SN	Level-1-260C-UNLIM	-40 to 125	LP8752 1E-Q1	Samples
LP87521ERNFTQ1	ACTIVE	VQFN-HR	RNF	26	250	RoHS-Exempt & Green	SN	Level-1-260C-UNLIM	-40 to 125	LP8752 1E-Q1	Samples
LP87522BRNFRQ1	ACTIVE	VQFN-HR	RNF	26	3000	RoHS-Exempt & Green	SN	Level-1-260C-UNLIM	-40 to 125	LP8752 2B-Q1	Samples
LP87522BRNFTQ1	ACTIVE	VQFN-HR	RNF	26	250	RoHS-Exempt & Green	SN	Level-1-260C-UNLIM	-40 to 125	LP8752 2B-Q1	Samples
LP87522ERNFRQ1	ACTIVE	VQFN-HR	RNF	26	3000	RoHS-Exempt & Green	SN	Level-1-260C-UNLIM	-40 to 125	LP8752 2E-Q1	Samples
LP87522ERNFTQ1	ACTIVE	VQFN-HR	RNF	26	250	RoHS-Exempt & Green	SN	Level-1-260C-UNLIM	-40 to 125	LP8752 2E-Q1	Samples
LP87523JRNFRQ1	ACTIVE	VQFN-HR	RNF	26	3000	RoHS-Exempt & Green	SN	Level-1-260C-UNLIM	-40 to 125	LP8752 3J-Q1	Samples
LP87523JRNFTQ1	ACTIVE	VQFN-HR	RNF	26	250	RoHS-Exempt & Green	SN	Level-1-260C-UNLIM	-40 to 125	LP8752 3J-Q1	Samples
LP87524TRNFRQ1	ACTIVE	VQFN-HR	RNF	26	3000	RoHS-Exempt & Green	SN	Level-1-260C-UNLIM	-40 to 125	LP8752 4T-Q1	Samples
LP87524TRNFTQ1	ACTIVE	VQFN-HR	RNF	26	250	RoHS-Exempt & Green	SN	Level-1-260C-UNLIM	-40 to 125	LP8752 4T-Q1	Samples
LP87525BRNFRQ1	ACTIVE	VQFN-HR	RNF	26	3000	RoHS-Exempt & Green	SN	Level-1-260C-UNLIM	-40 to 125	LP8752 5B-Q1	Samples
LP87525BRNFTQ1	ACTIVE	VQFN-HR	RNF	26	250	RoHS-Exempt & Green	SN	Level-1-260C-UNLIM	-40 to 125	LP8752 5B-Q1	Samples

(1) The marketing status values are defined as follows:
ACTIVE: Product device recommended for new designs.
LIFEBUY: TI has announced that the device will be discontinued, and a lifetime-buy period is in effect.
NRND: Not recommended for new designs. Device is in production to support existing customers, but TI does not recommend using this part in a new design.
PREVIEW: Device has been announced but is not in production. Samples may or may not be available.
OBSOLETE: TI has discontinued the production of the device.

(2) **RoHS:** TI defines "RoHS" to mean semiconductor products that are compliant with the current EU RoHS requirements for all 10 RoHS substances, including the requirement that RoHS substance do not exceed 0.1% by weight in homogeneous materials. Where designed to be soldered at high temperatures, "RoHS" products are suitable for use in specified lead-free processes. TI may reference these types of products as "Pb-Free".

RoHS Exempt: TI defines "RoHS Exempt" to mean products that contain lead but are compliant with EU RoHS pursuant to a specific EU RoHS exemption.
Green: TI defines "Green" to mean the content of Chlorine (Cl) and Bromine (Br) based flame retardants meet JS709B low halogen requirements of <=1000ppm threshold. Antimony trioxide based flame retardants must also meet the <=1000ppm threshold requirement.

(3) MSL, Peak Temp. - The Moisture Sensitivity Level rating according to the JEDEC industry standard classifications, and peak solder temperature.

(4) There may be additional marking, which relates to the logo, the lot trace code information, or the environmental category on the device.

(5) Multiple Device Markings will be inside parentheses. Only one Device Marking contained in parentheses and separated by a "~" will appear on a device. If a line is indented then it is a continuation of the previous line and the two combined represent the entire Device Marking for that device.

(6) Lead finish/Ball material - Orderable Devices may have multiple material finish options. Finish options are separated by a vertical ruled line. Lead finish/Ball material values may wrap to two lines if the finish value exceeds the maximum column width.

Important Information and Disclaimer: The information provided on this page represents TI's knowledge and belief as of the date that it is provided. TI bases its knowledge and belief on information provided by third parties, and makes no representation or warranty as to the accuracy of such information. Efforts are underway to better integrate information from third parties. TI has taken and continues to take reasonable steps to provide representative and accurate information but may not have conducted destructive testing or chemical analysis on incoming materials and chemicals. TI and TI suppliers consider certain information to be proprietary, and thus CAS numbers and other limited information may not be available for release.

In no event shall TI's liability arising out of such information exceed the total purchase price of the TI part(s) at issue in this document sold by TI to Customer on an annual basis.

TAPE AND REEL INFORMATION

REEL DIMENSIONS

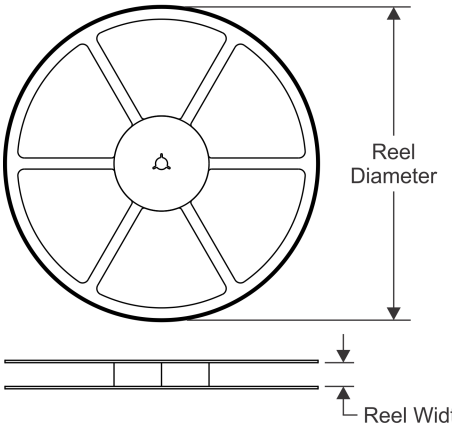

TAPE DIMENSIONS

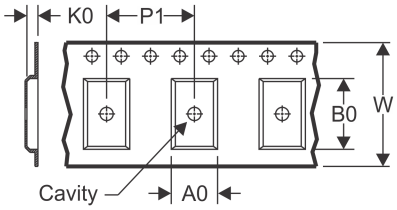

A0	Dimension designed to accommodate the component width
B0	Dimension designed to accommodate the component length
K0	Dimension designed to accommodate the component thickness
W	Overall width of the carrier tape
P1	Pitch between successive cavity centers

QUADRANT ASSIGNMENTS FOR PIN 1 ORIENTATION IN TAPE

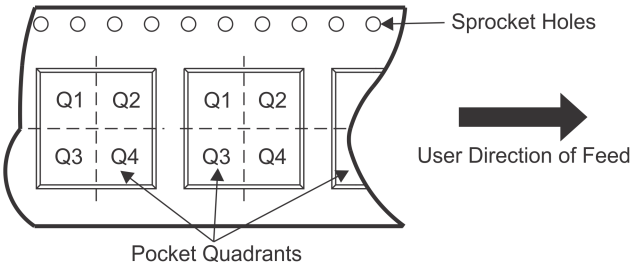

*All dimensions are nominal

Device	Package Type	Package Drawing	Pins	SPQ	Reel Diameter (mm)	Reel Width W1 (mm)	A0 (mm)	B0 (mm)	K0 (mm)	P1 (mm)	W (mm)	Pin1 Quadrant
LP87521ERNFRQ1	VQFN-HR	RNF	26	3000	330.0	12.4	4.25	4.75	1.2	8.0	12.0	Q1
LP87521ERNFTQ1	VQFN-HR	RNF	26	250	180.0	12.4	4.25	4.75	1.2	8.0	12.0	Q1
LP87522BRNFRQ1	VQFN-HR	RNF	26	3000	330.0	12.4	4.25	4.75	1.2	8.0	12.0	Q1
LP87522BRNFTQ1	VQFN-HR	RNF	26	250	180.0	12.4	4.25	4.75	1.2	8.0	12.0	Q1
LP87522ERNFRQ1	VQFN-HR	RNF	26	3000	330.0	12.4	4.25	4.75	1.2	8.0	12.0	Q1
LP87522ERNFTQ1	VQFN-HR	RNF	26	250	180.0	12.4	4.25	4.75	1.2	8.0	12.0	Q1
LP87523JRNFRQ1	VQFN-HR	RNF	26	3000	330.0	12.4	4.25	4.75	1.2	8.0	12.0	Q1
LP87523JRNFTQ1	VQFN-HR	RNF	26	250	180.0	12.4	4.25	4.75	1.2	8.0	12.0	Q1
LP87524TRNFRQ1	VQFN-HR	RNF	26	3000	330.0	12.4	4.25	4.75	1.2	8.0	12.0	Q1
LP87524TRNFTQ1	VQFN-HR	RNF	26	250	180.0	12.4	4.25	4.75	1.2	8.0	12.0	Q1
LP87525BRNFRQ1	VQFN-	RNF	26	3000	330.0	12.4	4.25	4.75	1.2	8.0	12.0	Q1

Device	Package Type	Package Drawing	Pins	SPQ	Reel Diameter (mm)	Reel Width W1 (mm)	A0 (mm)	B0 (mm)	K0 (mm)	P1 (mm)	W (mm)	Pin1 Quadrant
	HR											
LP87525BRNFTQ1	VQFN-HR	RNF	26	250	180.0	12.4	4.25	4.75	1.2	8.0	12.0	Q1

TAPE AND REEL BOX DIMENSIONS

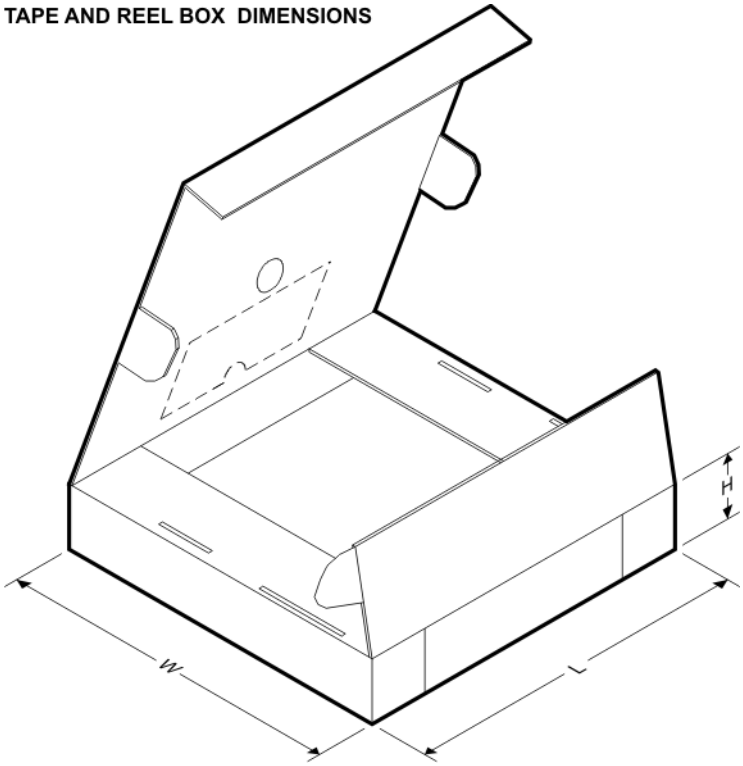

*All dimensions are nominal

Device	Package Type	Package Drawing	Pins	SPQ	Length (mm)	Width (mm)	Height (mm)
LP87521ERNFRQ1	VQFN-HR	RNF	26	3000	346.0	346.0	35.0
LP87521ERNFTQ1	VQFN-HR	RNF	26	250	200.0	183.0	25.0
LP87522BRNFRQ1	VQFN-HR	RNF	26	3000	346.0	346.0	35.0
LP87522BRNFTQ1	VQFN-HR	RNF	26	250	200.0	183.0	25.0
LP87522ERNFRQ1	VQFN-HR	RNF	26	3000	346.0	346.0	35.0
LP87522ERNFTQ1	VQFN-HR	RNF	26	250	200.0	183.0	25.0
LP87523JRNFRQ1	VQFN-HR	RNF	26	3000	346.0	346.0	35.0
LP87523JRNFTQ1	VQFN-HR	RNF	26	250	200.0	183.0	25.0
LP87524TRNFRQ1	VQFN-HR	RNF	26	3000	346.0	346.0	35.0
LP87524TRNFTQ1	VQFN-HR	RNF	26	250	200.0	183.0	25.0
LP87525BRNFRQ1	VQFN-HR	RNF	26	3000	346.0	346.0	35.0
LP87525BRNFTQ1	VQFN-HR	RNF	26	250	200.0	183.0	25.0

IMPORTANT NOTICE AND DISCLAIMER

TI PROVIDES TECHNICAL AND RELIABILITY DATA (INCLUDING DATASHEETS), DESIGN RESOURCES (INCLUDING REFERENCE DESIGNS), APPLICATION OR OTHER DESIGN ADVICE, WEB TOOLS, SAFETY INFORMATION, AND OTHER RESOURCES “AS IS” AND WITH ALL FAULTS, AND DISCLAIMS ALL WARRANTIES, EXPRESS AND IMPLIED, INCLUDING WITHOUT LIMITATION ANY IMPLIED WARRANTIES OF MERCHANTABILITY, FITNESS FOR A PARTICULAR PURPOSE OR NON-INFRINGEMENT OF THIRD PARTY INTELLECTUAL PROPERTY RIGHTS.

These resources are intended for skilled developers designing with TI products. You are solely responsible for (1) selecting the appropriate TI products for your application, (2) designing, validating and testing your application, and (3) ensuring your application meets applicable standards, and any other safety, security, or other requirements. These resources are subject to change without notice. TI grants you permission to use these resources only for development of an application that uses the TI products described in the resource. Other reproduction and display of these resources is prohibited. No license is granted to any other TI intellectual property right or to any third party intellectual property right. TI disclaims responsibility for, and you will fully indemnify TI and its representatives against, any claims, damages, costs, losses, and liabilities arising out of your use of these resources.

TI’s products are provided subject to TI’s Terms of Sale (https:www.ti.com/legal/termsofsale.html) or other applicable terms available either on ti.com or provided in conjunction with such TI products. TI’s provision of these resources does not expand or otherwise alter TI’s applicable warranties or warranty disclaimers for TI products.

Mailing Address: Texas Instruments, Post Office Box 655303, Dallas, Texas 75265
Copyright © 2021, Texas Instruments Incorporated