具有 ±15kV ESD 保护功能的 3V 至 5.5V 多通道 RS-232 线路驱动器和接收器

1 特性

- 为 RS-232 总线引脚提供 ESD 保护
  - ±15kV 人体放电模型 (HBM)
  - ±8kV IEC61000-4-2 接触放电
  - ±15kV IEC61000-4-2 气隙放电
- 符合或超出 TIA/EIA-232-F 和 ITU v.28 标准的要求
- 由 3V 至 5.5V V_{CC} 电源供电
- 速率高达 500kbit/s
- 两个驱动器和两个接收器
- 低待机电流。..1 μA（典型值）
- 外部电容器 ...4 × 0.1 μF
- 接受 5V 逻辑输入及 3.3V 电源
- 适合 SNx5C3222E 的备选高速引脚兼容器件 (1Mbit/s)

2 应用

- 工业 PC
- 有线网络
- 数据中心和网络设备
- 笔记本电脑
- 手持设备

3 说明

MAX3222E 由两个线路驱动器、两个线路接收器和一个双电荷泵电路组成，具有引脚对引脚（串行端口连接引脚，包括 GND）±15kV ESD 保护。

该器件符合 TIA/EIA-232-F 的要求并在异步通信控制器与串行端口连接器之间提供电气接口。电荷泵和四个小型外部电容器支持由 3V 至 5.5V 单电源供电。该器件以高达 500kbit/s 的典型数据信号传输速率运行，驱动器输出压摆率最大为 30V/μs。

通过设置关断 ($\overline{PWRDOWN}$) 输入低电平（仅从电源消耗 1μA 电流），可以将 MAX3222E 置于关断模式。当器件关断时，接收器保持活动状态，而驱动器置于高阻抗状态。此外，在关断期间，将会禁用板载电荷泵；V+ 降低至 V_{CC}，V– 升高至 GND。通过将启用 ($\overline{EN}$) 设置为高电平，接收器输出也可以置于高阻抗状态。

器件信息

器件型号	封装(1)	封装尺寸（标称值）
MAX3222E	DB (SSOP) (20)	10.2 mm x 5.30 mm
	DW (SOIC) (20)	15.4mm x 7.50mm
	PW (TSSOP) (20)	7.80 mm x 4.40mm

(1) 如需了解所有可用封装，请参阅数据表末尾的可订购产品附录。

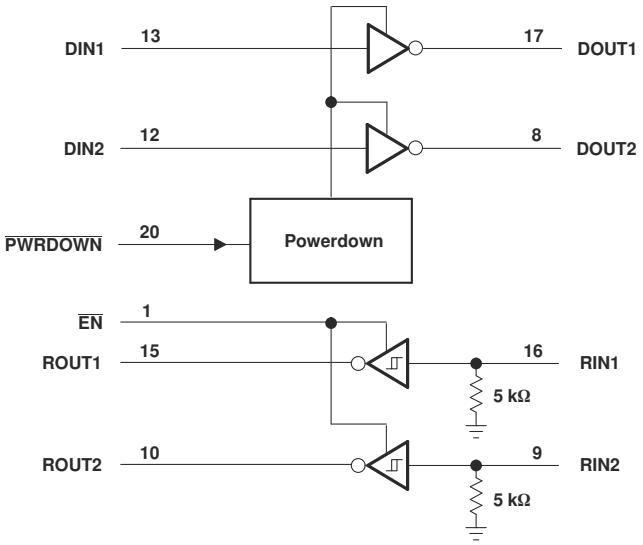

引脚编号用于 DB、DW 和 PW 封装。

逻辑图（正逻辑）

本文档旨在为方便起见，提供有关 TI 产品中文版本的信息，以确认产品的概要。有关适用的官方英文版本的最新信息，请访问 www.ti.com，其内容始终优先。TI 不保证翻译的准确性和有效性。在实际设计之前，请务必参考最新版本的英文版本。

Table of Contents

1 特性.....1
2 应用.....1
3 说明.....1
4 Revision History.....2
5 Pin Configuration and Functions.....3
6 Specifications.....4
6.1 Absolute Maximum Ratings.....4
ESD Ratings.....4
ESD Ratings - IEC Specifications.....4
6.2 Recommended Operating Conditions.....5
6.3 Thermal Information.....5
6.4 Electrical Characteristics.....5
6.5 Electrical Characteristics: Driver.....6
6.6 Switching Characteristics: Driver.....6
6.7 Electrical Characteristics: Receiver.....7
6.8 Switching Characteristics: Receiver.....7
7 Parameter Measurement Information.....8
8 Detailed Description.....10
8.1 Functional Block Diagram.....10
8.2 Device Functional Modes.....10
9 Application and Implementation.....11
9.1 Application Information.....11
9.2 Typical Application.....11
10 Device and Documentation Support.....12
10.1 接收文档更新通知.....12
10.2 支持资源.....12
10.3 Trademarks.....12
10.4 Electrostatic Discharge Caution.....12
10.5 术语表.....12
11 Mechanical, Packaging, and Orderable Information.....12

4 Revision History

注：以前版本的页码可能与当前版本的页码不同

Changes from Revision A (September 2009) to Revision B (August 2021)	Page
• 更新了*应用*部分的列表。	1
• 删除了*订购信息*表	1
• 添加了*器件信息*表、*引脚配置和功能*、*详细说明*部分、*应用和实施*部分	1
• Deleted the Package thermal impedance from the *Absolute Maximum Ratings*	4
• Changed the *ESD Ratings* table	4
• Added the *ESD Ratings - IEC Specifications* table	4
• Added the *Thermal Information* table	5
• Changed the value of $R_{\theta JA}$ for PW package (previously in the *Absolute Maximum Ratings* table), and added additional thermal parameters for all packages in the *Thermal Information* table	5

Copyright © 2021 Texas Instruments Incorporated

5 Pin Configuration and Functions

DB, DW, OR PW PACKAGE
(TOP VIEW)

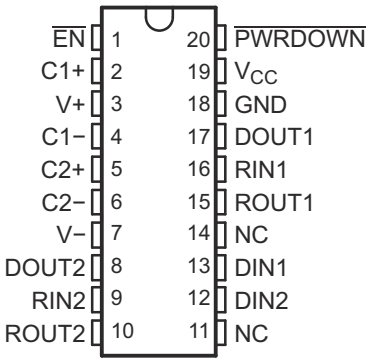

NC − No internal connection

表 5-1. Pin Functions

PIN		I/O	DESCRIPTION
NAME	NO.		
C1+	2	—	Charge pump capacitor pin
C1-	4	—	Charge pump capacitor pin
C2+	5	—	Charge pump capacitor pin
C2-	6	—	Charge pump capacitor pin
DIN1	13	I	Driver logic input
DIN2	12	I	Driver logic input
DOUT1	17	O	RS-232 driver output
DOUT2	8	O	RS-232 driver output
$\overline{EN}$	1	I	Receiver enable, active low
GND	18	—	Ground
NC	11,14	—	No internal connection
$\overline{PWRDOWN}$	20	I	Driver disable, active low
RIN1	16	I	RS-232 receiver input
RIN2	9	I	RS-232 receiver input
ROUT1	15	O	Receiver logic output
ROUT2	10	O	Receiver logic output
V_{CC}	19	—	Power Supply
V+	3	—	Charge pump capacitor pin
V-	7	—	Charge pump capacitor pin

Copyright © 2021 Texas Instruments Incorporated

6 Specifications

6.1 Absolute Maximum Ratings

over operating free-air temperature range (unless otherwise noted) (1)

			MIN	MAX	UNIT
V_{CC}	Supply voltage range(2)		–0.3	6	V
V+	Positive-output supply voltage range(2)		–0.3	7	V
V–	Negative-output supply voltage range(2)		0.3	–7	V
V+ – V–	Supply voltage difference(2)			13	V
V_I	Input voltage range	Driver ($\overline{EN}$, $\overline{PWRDOWN}$)	–0.3	6	V
		Receiver	–25	25	
V_O	Output voltage range	Driver	–13.2	13.2	V
		Receiver	–0.3	V_{CC} + 0.3	
T_J	Operating virtual junction temperature			150	°C
T_{stg}	Storage temperature range		–65	150	°C

(1) Stresses beyond those listed under "absolute maximum ratings" may cause permanent damage to the device. These are stress ratings only, and functional operation of the device at these or any other conditions beyond those indicated under "recommended operating conditions" is not implied. Exposure to absolute-maximum-rated conditions for extended periods may affect device reliability.
(2) All voltages are with respect to network GND.

ESD Ratings

				TYP	UNIT
$V_{(ESD)}$	Electrostatic Discharge	Human-body model (HBM), per ANSI/ESDA/JEDEC JS-001 (1)	All pins except RIN1, RIN2, DOUT1 and DOUT2 pins	±3000	V
			RIN1, RIN2, DOUT1 and DOUT2 pins to GND	±15,000	
		Charged device model (CDM), per ANSI/ESDA/JEDEC JS-002 (2)	All pins	±1500	

(1) JEDEC document JEP155 states that 500-V HBM allows safe manufacturing with a standard ESD control process.
(2) JEDEC document JEP157 states that 250-V CDM allows safe manufacturing with a standard ESD control process.

ESD Ratings - IEC Specifications

				TYP	UNIT
$V_{(ESD)}$	Electrostatic discharge	IEC 61000-4-2, Contact Discharge(1)	RIN1, RIN2, DOUT1, DOUT2 pins	±8,000	V
		IEC 61000-4-2, Air-Gap Discharge(1)		±15,000	

(1) For PW Package only, a minimum of 1-µF capacitor is required between V_{CC} and GND to meet the specified IEC 61000-4-2 rating.

Copyright © 2021 Texas Instruments Incorporated

6.2 Recommended Operating Conditions

See 图 9-1 and (1)

				MIN	NOM	MAX	UNIT
	Supply voltage		V_{CC} = 3.3 V	3	3.3	3.6	V
			V_{CC} = 5 V	4.5	5	5.5	
V_{IH}	Driver and control high-level input voltage	DIN, $\overline{EN}$, $\overline{PWRDOWN}$	V_{CC} = 3.3 V	2			V
			V_{CC} = 5 V	2.4			
V_{IL}	Driver and control low-level input voltage	DIN, $\overline{EN}$, $\overline{PWRDOWN}$				0.8	V
V_I	Driver and control input voltage	DIN, $\overline{EN}$, $\overline{PWRDOWN}$		0		5.5	V
V_I	Receiver input voltage			–25		25	V
T_A	Operating free-air temperature		MAX3222EC	0		70	°C
			MAX3222EI	–40		85	

(1) Test conditions are C1 – C4 = 0.1 μF at V_{CC} = 3.3 V ± 0.3 V; C1 = 0.047 μF, C2 – C4 = 0.33 μF at V_{CC} = 5 V ± 0.5 V.

6.3 Thermal Information

THERMAL METRIC(1)		MAX3222E			UNIT
		DB (SSOP)	DW (SOIC)	PW (TSSOP)	
		20 Pins	20 Pins	20 Pins	
$R_{\theta JA}$	Junction-to-ambient thermal resistance	70	58	94.1	°C/W
$R_{\theta JC(top)}$	Junction-to-case (top) thermal resistance	33.6	30.0	35.2	°C/W
$R_{\theta JB}$	Junction-to-board thermal resistance	36.4	29.6	45.5	°C/W
ψ_{JT}	Junction-to-top characterization parameter	4.8	7.7	3.1	°C/W
ψ_{JB}	Junction-to-board characterization parameter	35.9	29.3	45.1	°C/W

(1) For more information about traditional and new thermal metrics, see the *Semiconductor and IC package thermal metrics* application report.

6.4 Electrical Characteristics

over recommended ranges of supply voltage and operating free-air temperature (unless otherwise noted) (see 图 9-1)

PARAMETER		TEST CONDITIONS(2)	MIN	TYP(1)	MAX	UNIT
I_I	Input leakage current ($\overline{EN}$, $\overline{PWRDOWN}$)			±0.01	±1	μA
I_{CC}	Supply current	No load, $\overline{PWRDOWN}$ at V_{CC}		0.3	1	mA
	Supply current (powered off)	No load, $\overline{PWRDOWN}$ at GND		1	10	μA

(1) All typical values are at V_{CC} = 3.3 V or V_{CC} = 5 V, and T_A = 25°C.
(2) Test conditions are C1 – C4 = 0.1 μF at V_{CC} = 3.3 V ± 0.3 V; C1 = 0.047 μF, C2 – C4 = 0.33 μF at V_{CC} = 5 V ± 0.5 V.

Copyright © 2021 Texas Instruments Incorporated

6.5 Electrical Characteristics: Driver

over recommended ranges of supply voltage and operating free-air temperature (unless otherwise noted) (see 图 9-1)

PARAMETER		TEST CONDITIONS[3]		MIN	TYP[1]	MAX	UNIT
V_{OH}	High-level output voltage	DOUT at R_L = 3 kΩ to GND,	DIN = GND	5	5.4		V
V_{OL}	Low-level output voltage	DOUT at R_L = 3 kΩ to GND,	DIN = V_{CC}	–5	–5.4		V
I_{IH}	High-level input current	V_I = V_{CC}			±0.01	±1	μA
I_{IL}	Low-level input current	V_I at GND			±0.01	±1	μA
I_{OS}	Short-circuit output current[2]	V_{CC} = 3.6 V	V_O = 0 V		±35	±60	mA
		V_{CC} = 5.5 V					
r_o	Output resistance	V_{CC}, V+, and V– = 0 V,	V_O = ±2 V	300	10M		Ω
I_{OZ}	Output leakage current	$\overline{PWRDOWN}$ = GND	V_{CC} = 3 V to 3.6 V, V_O = ±12 V			±25	μA
			V_{CC} = 4.5 V to 5.5 V, V_O = ±10 V			±25	

(1) All typical values are at V_{CC} = 3.3 V or V_{CC} = 5 V, and T_A = 25°C.
(2) Short-circuit durations should be controlled to prevent exceeding the device absolute power dissipation ratings, and not more than one output should be shorted at a time.
(3) Test conditions are C1 – C4 = 0.1 μF at V_{CC} = 3.3 V ± 0.3 V; C1 = 0.047 μF, C2 – C4 = 0.33 μF at V_{CC} = 5 V ± 0.5 V.

6.6 Switching Characteristics: Driver

over recommended ranges of supply voltage and operating free-air temperature (unless otherwise noted) (see 图 9-1)

PARAMETER		TEST CONDITIONS[3]		MIN	TYP[1]	MAX	UNIT
	Maximum data rate	C_L = 1000 pF, One DOUT switching,	R_L = 3 kΩ, See 图 7-1	250	500		kbit/s
$t_{sk(p)}$	Pulse skew[2]	C_L = 150 pF to 2500 pF, See 图 7-2	R_L = 3 kΩ to 7 kΩ,		300		ns
SR(tr)	Slew rate, transition region (see 图 7-1)	R_L = 3 kΩ to 7 kΩ, V_{CC} = 3.3 V	C_L = 150 pF to 1000 pF	6		30	V/μs
			C_L = 150 pF to 2500 pF	4		30	

(1) All typical values are at V_{CC} = 3.3 V or V_{CC} = 5 V, and T_A = 25°C.
(2) Pulse skew is defined as $|t_{PLH} - t_{PHL}|$ of each channel of the same device.
(3) Test conditions are C1 – C4 = 0.1 μF at V_{CC} = 3.3 V ± 0.3 V; C1 = 0.047 μF, C2 – C4 = 0.33 μF at V_{CC} = 5 V ± 0.5 V.

Copyright © 2021 Texas Instruments Incorporated

6.7 Electrical Characteristics: Receiver

over recommended ranges of supply voltage and operating free-air temperature (unless otherwise noted) (see 图 9-1)

PARAMETER		TEST CONDITIONS(2)	MIN	TYP(1)	MAX	UNIT
V_{OH}	High-level output voltage	I_{OH} = – 1 mA	V_{CC} – 0.6	V_{CC} – 0.1		V
V_{OL}	Low-level output voltage	I_{OL} = 1.6 mA			0.4	V
V_{IT+}	Positive-going input threshold voltage	V_{CC} = 3.3 V		1.5	2.4	V
		V_{CC} = 5 V		1.8	2.4	
V_{IT-}	Negative-going input threshold voltage	V_{CC} = 3.3 V	0.6	1.2		V
		V_{CC} = 5 V	0.8	1.5		
V_{hys}	Input hysteresis (V_{IT+} – V_{IT-})			0.3		V
I_{OZ}	Output leakage current	$\overline{EN}$ = 1		±0.05	±10	μA
r_i	Input resistance	V_I = ±3 V to ±25 V	3	5	7	kΩ

(1) All typical values are at V_{CC} = 3.3 V or V_{CC} = 5 V, and T_A = 25°C.
(2) Test conditions are C1 – C4 = 0.1 μF at V_{CC} = 3.3 V ± 0.3 V; C1 = 0.047 μF, C2 – C4 = 0.33 μF at V_{CC} = 5 V ± 0.5 V.

6.8 Switching Characteristics: Receiver

over recommended ranges of supply voltage and operating free-air temperature (unless otherwise noted)

PARAMETER		TEST CONDITIONS(3)	TYP(1)	UNIT
t_{PLH}	Propagation delay time, low- to high-level output	C_L = 150 pF, See 图 7-3	300	ns
t_{PHL}	Propagation delay time, high- to low-level output	C_L = 150 pF, See 图 7-3	300	ns
t_{en}	Output enable time	C_L = 150 pF, R_L = 3 kΩ, See 图 7-4	200	ns
t_{dis}	Output disable time	C_L = 150 pF, R_L = 3 kΩ, See 图 7-4	200	ns
$t_{sk(p)}$	Pulse skew(2)	See 图 7-3	300	ns

(1) All typical values are at V_{CC} = 3.3 V or V_{CC} = 5 V, and T_A = 25°C.
(2) Pulse skew is defined as $|t_{PLH} - t_{PHL}|$ of each channel of the same device.
(3) Test conditions are C1 – C4 = 0.1 μF at V_{CC} = 3.3 V ± 0.3 V; C1 = 0.047 μF, C2 – C4 = 0.33 μF at V_{CC} = 5 V ± 0.5 V.

Copyright © 2021 Texas Instruments Incorporated

7 Parameter Measurement Information

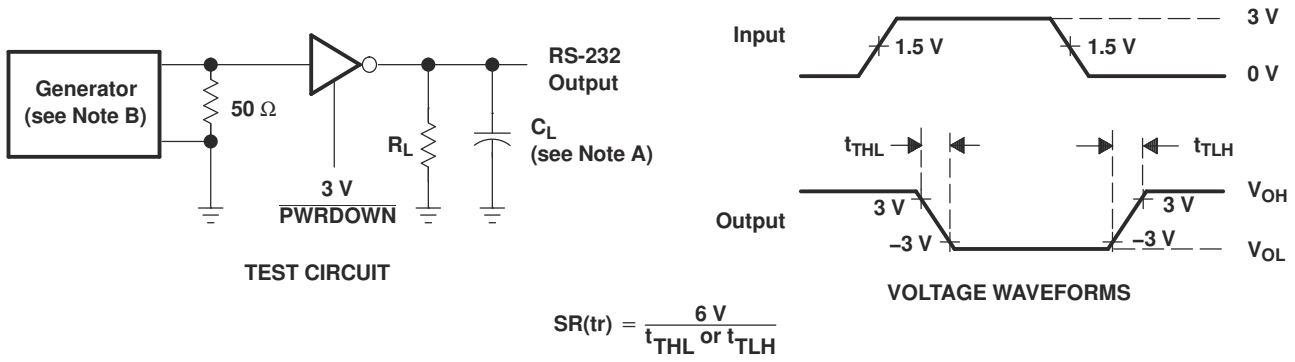

A. C_L includes probe and jig capacitance.

B. The pulse generator has the following characteristics: PRR = 250 kbit/s, Z_O = 50 Ω, 50% duty cycle, t_r ⩽ 10 ns, t_f ⩽ 10 ns.

图 7-1. Driver Slew Rate

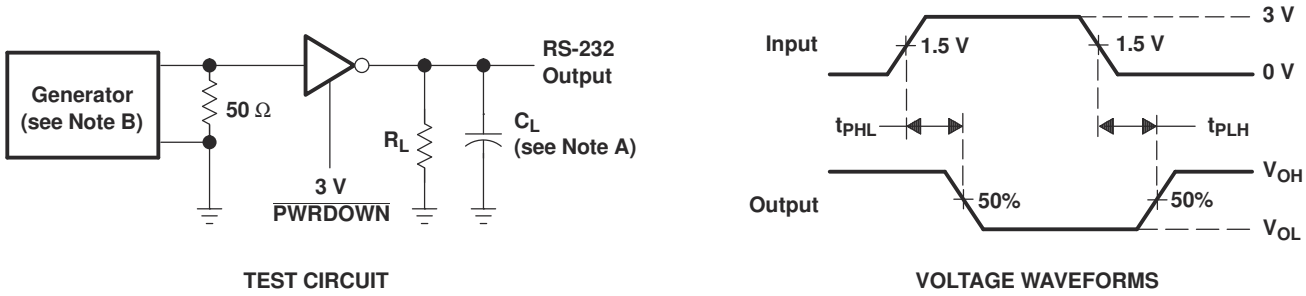

A. C_L includes probe and jig capacitance.

B. The pulse generator has the following characteristics: PRR = 250 kbit/s, Z_O = 50 Ω, 50% duty cycle, t_r ⩽ 10 ns, t_f ⩽ 10 ns.

图 7-2. Driver Pulse Skew

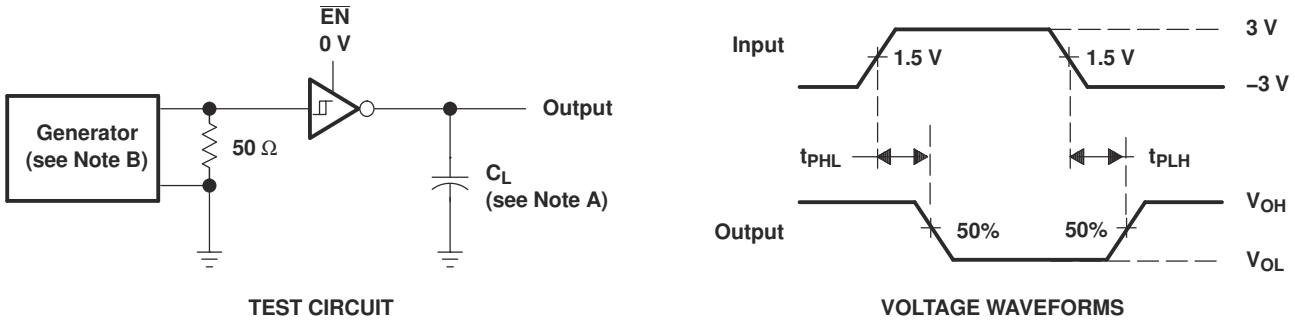

A. C_L includes probe and jig capacitance.

B. The pulse generator has the following characteristics: Z_O = 50 Ω, 50% duty cycle, t_r ⩽ 10 ns, t_f ⩽ 10 ns.

图 7-3. Receiver Propagation Delay Times

Copyright © 2021 Texas Instruments Incorporated

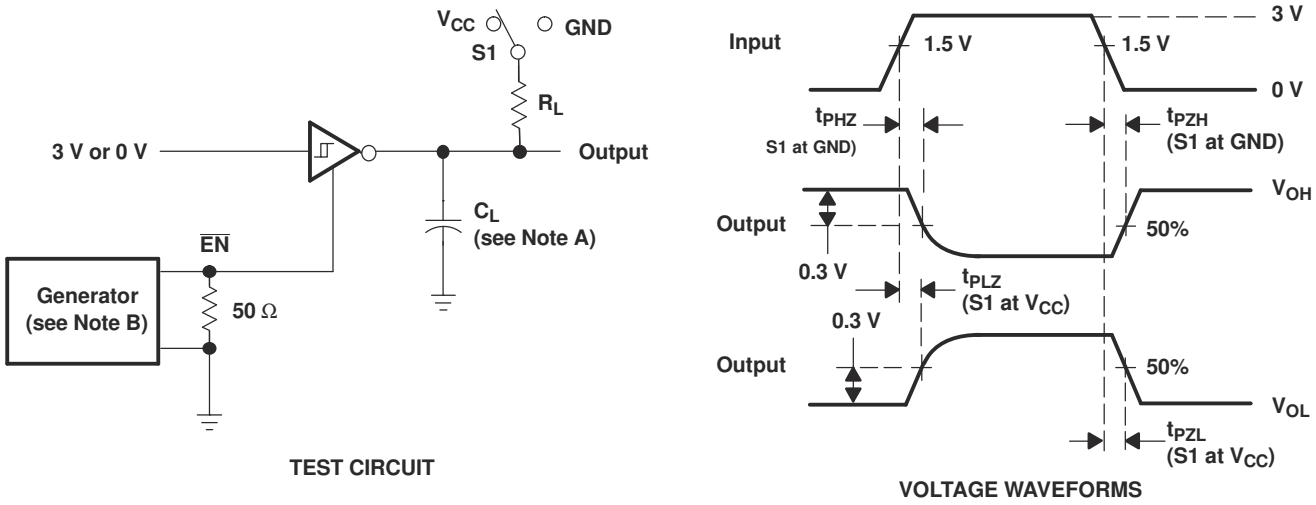

A. C_L includes probe and jig capacitance.

B. The pulse generator has the following characteristics: Z_O = 50 Ω, 50% duty cycle, $t_r \leqslant$ 10 ns, $t_f \leqslant$ 10 ns.

图 7-4. Receiver Enable and Disable Times

8 Detailed Description

8.1 Functional Block Diagram

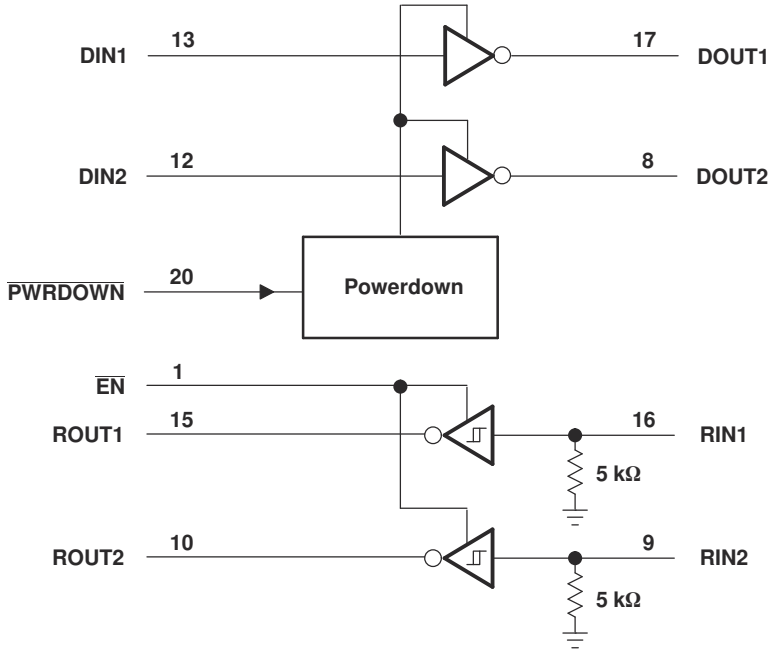

Pin numbers are for the DB, DW, and PW packages.

图 8-1. Logic Diagram (Positive Logic)

8.2 Device Functional Modes

表 8-1. Function Table: Each Driver

INPUTS(1)		OUTPUT DOUT
DIN	PWRDOWN	
X	L	Z
L	H	H
H	H	L

(1) H = high level, L = low level, X = irrelevant, Z = high impedance

表 8-2. Function Table: Each Receiver

INPUTS(1)		OUTPUT ROUT
RIN	EN	
L	L	H
H	L	L
X	H	Z
Open	L	H

(1) H = high level, L = low level, X = irrelevant,
Z = high impedance (off),
Open = input disconnected or connected driver off

Copyright © 2021 Texas Instruments Incorporated

9 Application and Implementation

Note

以下应用部分中的信息不属于 TI 器件规格的范围，TI 不担保其准确性和完整性。TI 的客 户应负责确定器件是否适用于其应用。客户应验证并测试其设计，以确保系统功能。

9.1 Application Information

9.2 Typical Application

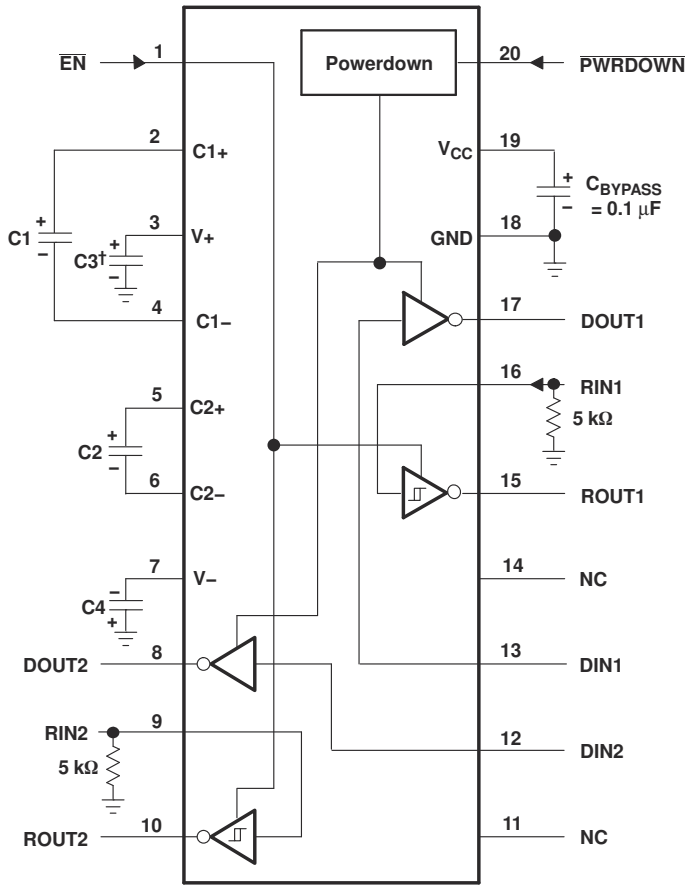

† C3 can be connected to V_{CC} or GND.

NOTES: A. Resistor values shown are nominal.
B. NC – No internal connection
C. Nonpolarized ceramic capacitors are acceptable. If polarized tantalum or electrolytic capacitors are used, they should be connected as shown.

V_{CC} vs CAPACITOR VALUES

V_{CC}	C1	C2, C3, and C4
3.3 V ± 0.3 V	0.1 µF	0.1 µF
5 V ± 0.5 V	0.047 µF	0.33 µF
3 V to 5.5 V	0.1 µF	0.47 µF

图 9-1. Typical Operating Circuit and Capacitor Values

Copyright © 2021 Texas Instruments Incorporated

10 Device and Documentation Support

TI offers an extensive line of development tools. Tools and software to evaluate the performance of the device, generate code, and develop solutions are listed below.

10.1 接收文档更新通知

要接收文档更新通知，请导航至 ti.com 上的器件产品文件夹。点击 *订阅更新* 进行注册，即可每周接收产品信息更改摘要。有关更改的详细信息，请查看任何已修订文档中包含的修订历史记录。

10.2 支持资源

TI E2E™ 支持论坛是工程师的重要参考资料，可直接从专家获得快速、经过验证的解答和设计帮助。搜索现有解答或提出自己的问题可获得所需的快速设计帮助。

链接的内容由各个贡献者“按原样”提供。这些内容并不构成 TI 技术规范，并且不一定反映 TI 的观点；请参阅 TI 的《使用条款》。

10.3 Trademarks

TI E2E™ is a trademark of Texas Instruments.
所有商标均为其各自所有者的财产。

10.4 Electrostatic Discharge Caution



This integrated circuit can be damaged by ESD. Texas Instruments recommends that all integrated circuits be handled with appropriate precautions. Failure to observe proper handling and installation procedures can cause damage.

ESD damage can range from subtle performance degradation to complete device failure. Precision integrated circuits may be more susceptible to damage because very small parametric changes could cause the device not to meet its published specifications.

10.5 术语表

TI 术语表　　本术语表列出并解释了术语、首字母缩略词和定义。

11 Mechanical, Packaging, and Orderable Information

The following pages include mechanical, packaging, and orderable information. This information is the most current data available for the designated devices. This data is subject to change without notice and revision of this document. For browser-based versions of this data sheet, refer to the left-hand navigation.

Copyright © 2021 Texas Instruments Incorporated

重要声明和免责声明

TI 提供技术和可靠性数据（包括数据表）、设计资源（包括参考设计）、应用或其他设计建议、网络工具、安全信息和其他资源，不保证没有瑕疵且不做出任何明示或暗示的担保，包括但不限于对适销性、某特定用途方面的适用性或不侵犯任何第三方知识产权的暗示担保。

这些资源可供使用 TI 产品进行设计的熟练开发人员使用。您将自行承担以下全部责任：(1) 针对您的应用选择合适的 TI 产品，(2) 设计、验证并测试您的应用，(3) 确保您的应用满足相应标准以及任何其他安全、安保或其他要求。这些资源如有变更，恕不另行通知。TI 授权您仅可将这些资源用于研发本资源所述的 TI 产品的应用。严禁对这些资源进行其他复制或展示。您无权使用任何其他 TI 知识产权或任何第三方知识产权。您应全额赔偿因在这些资源的使用中对 TI 及其代表造成的任何索赔、损害、成本、损失和债务，TI 对此概不负责。

TI 提供的产品受 TI 的销售条款 (https:www.ti.com/legal/termsofsale.html) 或 ti.com 上其他适用条款/TI 产品随附的其他适用条款的约束。TI 提供这些资源并不会扩展或以其他方式更改 TI 针对 TI 产品发布的适用的担保或担保免责声明。

邮寄地址：Texas Instruments, Post Office Box 655303, Dallas, Texas 75265
Copyright © 2021，德州仪器 (TI) 公司

PACKAGING INFORMATION

Orderable Device	Status (1)	Package Type	Package Drawing	Pins	Package Qty	Eco Plan (2)	Lead finish/ Ball material (6)	MSL Peak Temp (3)	Op Temp (°C)	Device Marking (4/5)	Samples
MAX3222ECDB	ACTIVE	SSOP	DB	20	70	RoHS & Green	NIPDAU	Level-1-260C-UNLIM	0 to 70	MP222EC	Samples
MAX3222ECDBR	ACTIVE	SSOP	DB	20	2000	RoHS & Green	NIPDAU	Level-1-260C-UNLIM	0 to 70	MP222EC	Samples
MAX3222ECDW	ACTIVE	SOIC	DW	20	25	RoHS & Green	NIPDAU	Level-1-260C-UNLIM	0 to 70	MAX3222EC	Samples
MAX3222ECDWR	ACTIVE	SOIC	DW	20	2000	RoHS & Green	NIPDAU	Level-1-260C-UNLIM	0 to 70	MAX3222EC	Samples
MAX3222ECPW	NRND	TSSOP	PW	20	70	RoHS & Green	NIPDAU	Level-1-260C-UNLIM	0 to 70	MP222EC	
MAX3222ECPWG4	NRND	TSSOP	PW	20	70	RoHS & Green	NIPDAU	Level-1-260C-UNLIM	0 to 70	MP222EC	
MAX3222ECPWR	ACTIVE	TSSOP	PW	20	2000	RoHS & Green	NIPDAU	Level-1-260C-UNLIM	0 to 70	MP222EC	Samples
MAX3222EIDB	ACTIVE	SSOP	DB	20	70	RoHS & Green	NIPDAU	Level-1-260C-UNLIM	-40 to 85	MP222EI	Samples
MAX3222EIDBR	ACTIVE	SSOP	DB	20	2000	RoHS & Green	NIPDAU	Level-1-260C-UNLIM	-40 to 85	MP222EI	Samples
MAX3222EIDW	ACTIVE	SOIC	DW	20	25	RoHS & Green	NIPDAU	Level-1-260C-UNLIM	-40 to 85	MAX3222EI	Samples
MAX3222EIDWR	ACTIVE	SOIC	DW	20	2000	RoHS & Green	NIPDAU	Level-1-260C-UNLIM	-40 to 85	MAX3222EI	Samples
MAX3222EIPW	NRND	TSSOP	PW	20	70	RoHS & Green	NIPDAU	Level-1-260C-UNLIM	-40 to 85	MP222EI	
MAX3222EIPWG4	NRND	TSSOP	PW	20	70	RoHS & Green	NIPDAU	Level-1-260C-UNLIM	-40 to 85	MP222EI	
MAX3222EIPWR	ACTIVE	TSSOP	PW	20	2000	RoHS & Green	NIPDAU	Level-1-260C-UNLIM	-40 to 85	MP222EI	Samples

(1) The marketing status values are defined as follows:
ACTIVE: Product device recommended for new designs.
LIFEBUY: TI has announced that the device will be discontinued, and a lifetime-buy period is in effect.
NRND: Not recommended for new designs. Device is in production to support existing customers, but TI does not recommend using this part in a new design.
PREVIEW: Device has been announced but is not in production. Samples may or may not be available.
OBSOLETE: TI has discontinued the production of the device.

(2) **RoHS:** TI defines "RoHS" to mean semiconductor products that are compliant with the current EU RoHS requirements for all 10 RoHS substances, including the requirement that RoHS substance do not exceed 0.1% by weight in homogeneous materials. Where designed to be soldered at high temperatures, "RoHS" products are suitable for use in specified lead-free processes. TI may reference these types of products as "Pb-Free".
RoHS Exempt: TI defines "RoHS Exempt" to mean products that contain lead but are compliant with EU RoHS pursuant to a specific EU RoHS exemption.
Green: TI defines "Green" to mean the content of Chlorine (Cl) and Bromine (Br) based flame retardants meet JS709B low halogen requirements of <=1000ppm threshold. Antimony trioxide based flame retardants must also meet the <=1000ppm threshold requirement.

(3) MSL, Peak Temp. - The Moisture Sensitivity Level rating according to the JEDEC industry standard classifications, and peak solder temperature.

(4) There may be additional marking, which relates to the logo, the lot trace code information, or the environmental category on the device.

(5) Multiple Device Markings will be inside parentheses. Only one Device Marking contained in parentheses and separated by a "~" will appear on a device. If a line is indented then it is a continuation of the previous line and the two combined represent the entire Device Marking for that device.

(6) Lead finish/Ball material - Orderable Devices may have multiple material finish options. Finish options are separated by a vertical ruled line. Lead finish/Ball material values may wrap to two lines if the finish value exceeds the maximum column width.

Important Information and Disclaimer: The information provided on this page represents TI's knowledge and belief as of the date that it is provided. TI bases its knowledge and belief on information provided by third parties, and makes no representation or warranty as to the accuracy of such information. Efforts are underway to better integrate information from third parties. TI has taken and continues to take reasonable steps to provide representative and accurate information but may not have conducted destructive testing or chemical analysis on incoming materials and chemicals. TI and TI suppliers consider certain information to be proprietary, and thus CAS numbers and other limited information may not be available for release.

In no event shall TI's liability arising out of such information exceed the total purchase price of the TI part(s) at issue in this document sold by TI to Customer on an annual basis.

TAPE AND REEL INFORMATION

REEL DIMENSIONS

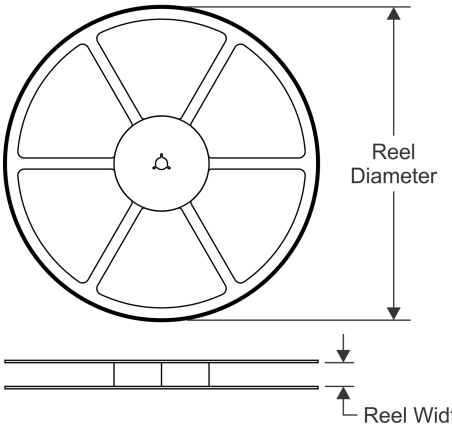

TAPE DIMENSIONS

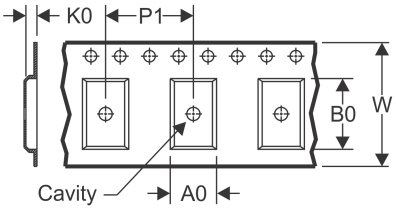

A0	Dimension designed to accommodate the component width
B0	Dimension designed to accommodate the component length
K0	Dimension designed to accommodate the component thickness
W	Overall width of the carrier tape
P1	Pitch between successive cavity centers

QUADRANT ASSIGNMENTS FOR PIN 1 ORIENTATION IN TAPE

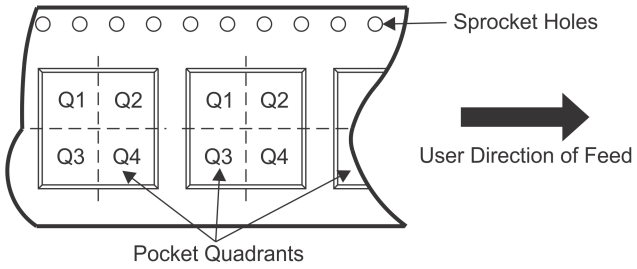

*All dimensions are nominal

Device	Package Type	Package Drawing	Pins	SPQ	Reel Diameter (mm)	Reel Width W1 (mm)	A0 (mm)	B0 (mm)	K0 (mm)	P1 (mm)	W (mm)	Pin1 Quadrant
MAX3222ECDBR	SSOP	DB	20	2000	330.0	16.4	8.2	7.5	2.5	12.0	16.0	Q1
MAX3222ECDWR	SOIC	DW	20	2000	330.0	24.4	10.8	13.3	2.7	12.0	24.0	Q1
MAX3222ECPWR	TSSOP	PW	20	2000	330.0	16.4	6.95	7.0	1.4	8.0	16.0	Q1
MAX3222ECPWR	TSSOP	PW	20	2000	330.0	16.4	6.95	7.0	1.4	8.0	16.0	Q1
MAX3222EIDBR	SSOP	DB	20	2000	330.0	16.4	8.2	7.5	2.5	12.0	16.0	Q1
MAX3222EIDWR	SOIC	DW	20	2000	330.0	24.4	10.8	13.3	2.7	12.0	24.0	Q1
MAX3222EIPWR	TSSOP	PW	20	2000	330.0	16.4	6.95	7.0	1.4	8.0	16.0	Q1

TAPE AND REEL BOX DIMENSIONS

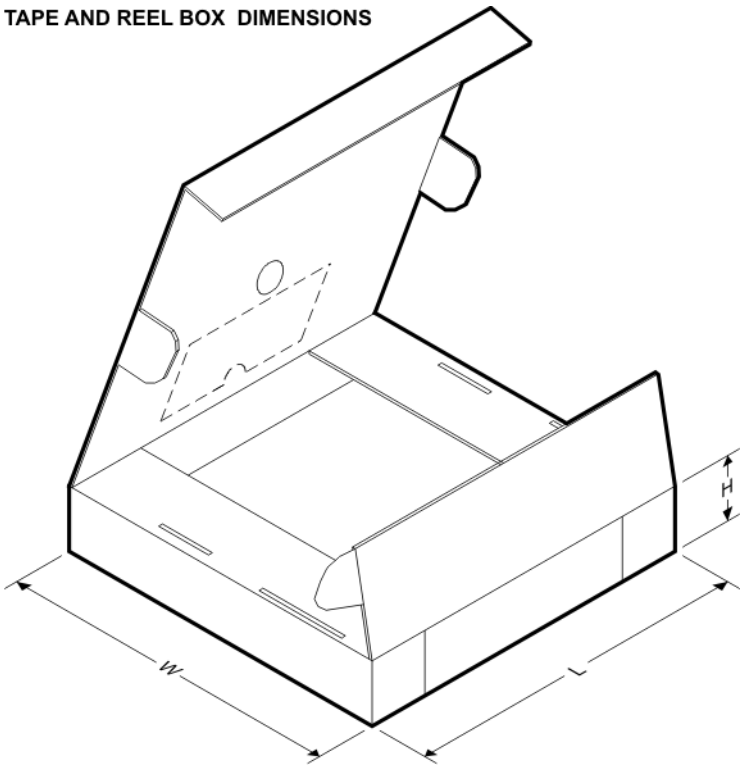

*All dimensions are nominal

Device	Package Type	Package Drawing	Pins	SPQ	Length (mm)	Width (mm)	Height (mm)
MAX3222ECDBR	SSOP	DB	20	2000	853.0	449.0	35.0
MAX3222ECDWR	SOIC	DW	20	2000	367.0	367.0	45.0
MAX3222ECPWR	TSSOP	PW	20	2000	853.0	449.0	35.0
MAX3222ECPWR	TSSOP	PW	20	2000	853.0	449.0	35.0
MAX3222EIDBR	SSOP	DB	20	2000	853.0	449.0	35.0
MAX3222EIDWR	SOIC	DW	20	2000	367.0	367.0	45.0
MAX3222EIPWR	TSSOP	PW	20	2000	853.0	449.0	35.0

TUBE

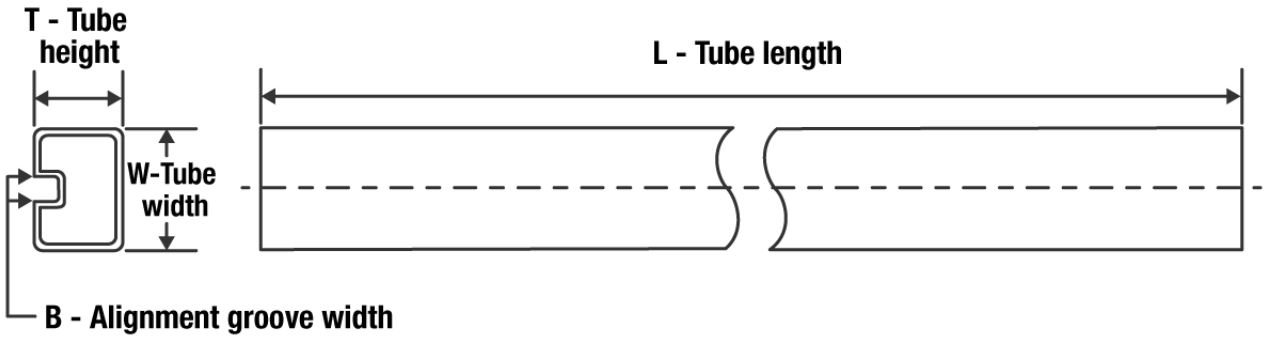

*All dimensions are nominal

Device	Package Name	Package Type	Pins	SPQ	L (mm)	W (mm)	T (µm)	B (mm)
MAX3222ECDB	DB	SSOP	20	70	530	10.5	4000	4.1
MAX3222ECDW	DW	SOIC	20	25	507	12.83	5080	6.6
MAX3222ECPW	PW	TSSOP	20	70	530	10.2	3600	3.5
MAX3222ECPWG4	PW	TSSOP	20	70	530	10.2	3600	3.5
MAX3222EIDB	DB	SSOP	20	70	530	10.5	4000	4.1
MAX3222EIDW	DW	SOIC	20	25	507	12.83	5080	6.6
MAX3222EIPW	PW	TSSOP	20	70	530	10.2	3600	3.5
MAX3222EIPWG4	PW	TSSOP	20	70	530	10.2	3600	3.5

PACKAGE OUTLINE

PW0020A

TSSOP - 1.2 mm max height

SMALL OUTLINE PACKAGE

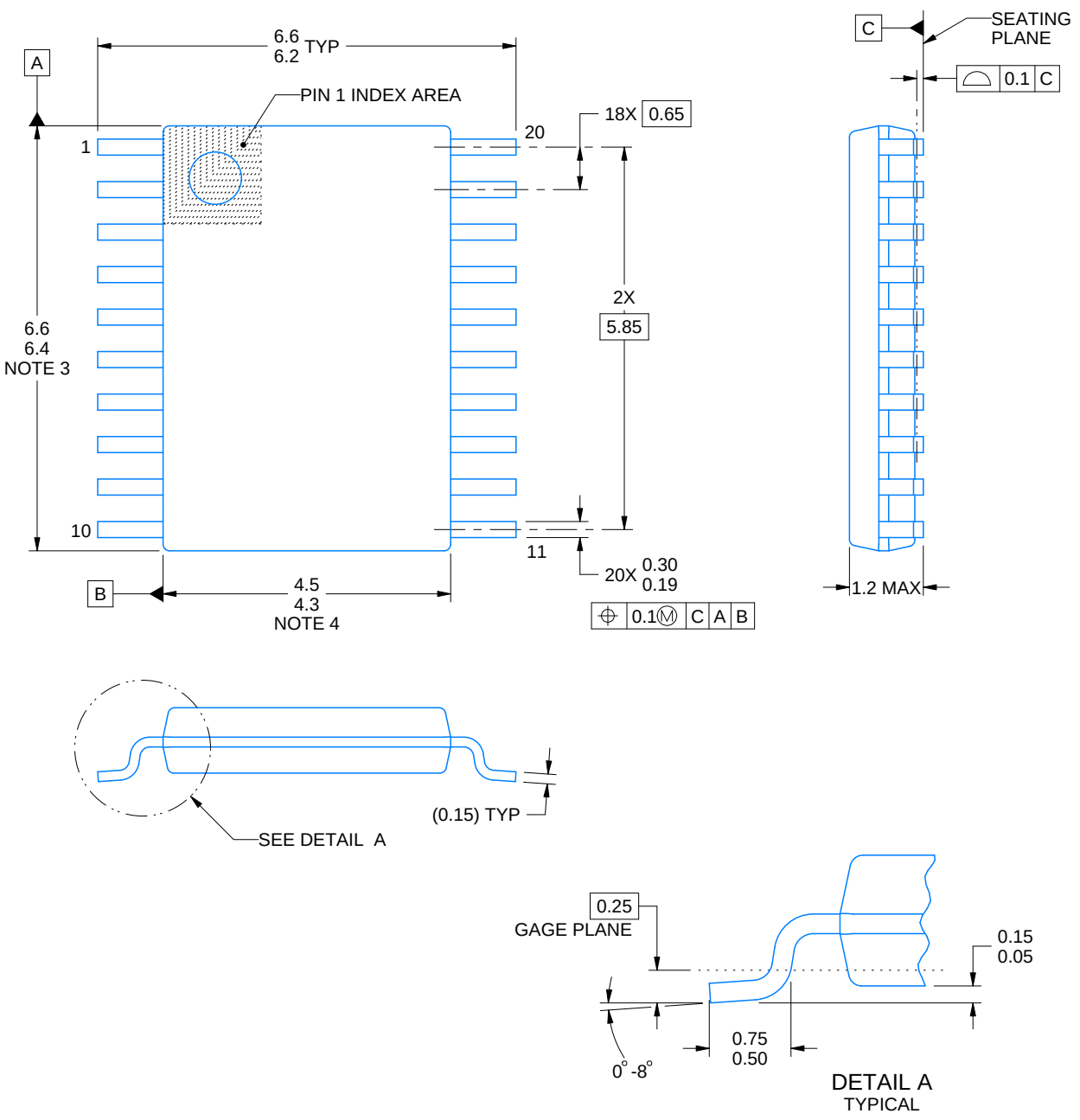

NOTES:

1. All linear dimensions are in millimeters. Any dimensions in parenthesis are for reference only. Dimensioning and tolerancing per ASME Y14.5M.
2. This drawing is subject to change without notice.
3. This dimension does not include mold flash, protrusions, or gate burrs. Mold flash, protrusions, or gate burrs shall not exceed 0.15 mm per side.
4. This dimension does not include interlead flash. Interlead flash shall not exceed 0.25 mm per side.
5. Reference JEDEC registration MO-153.

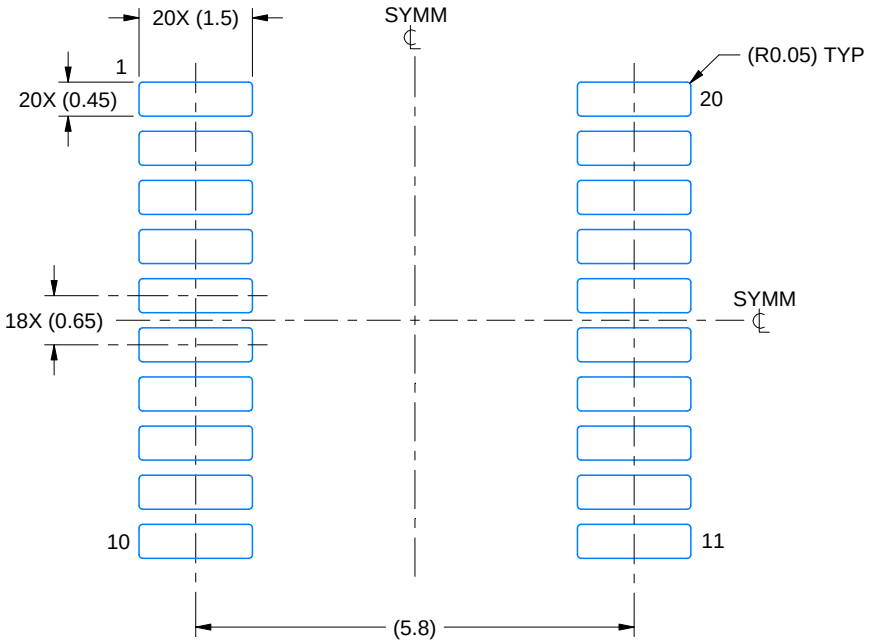

LAND PATTERN EXAMPLE
EXPOSED METAL SHOWN
SCALE: 10X



SOLDER MASK DETAILS

4220206/A 02/2017

NOTES: (continued)

6. Publication IPC-7351 may have alternate designs.
7. Solder mask tolerances between and around signal pads can vary based on board fabrication site.

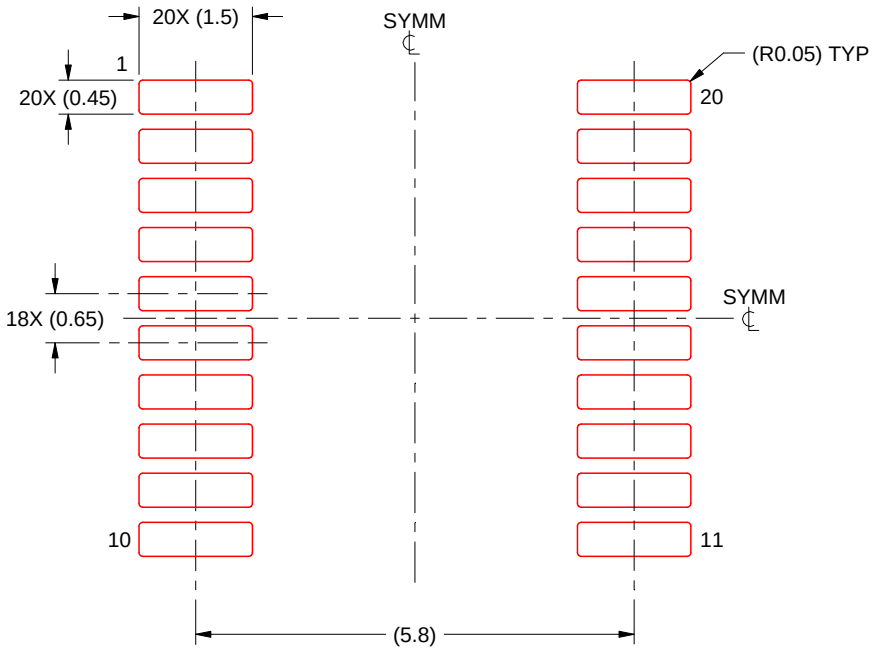

SOLDER PASTE EXAMPLE
BASED ON 0.125 mm THICK STENCIL
SCALE: 10X

4220206/A 02/2017

NOTES: (continued)

8. Laser cutting apertures with trapezoidal walls and rounded corners may offer better paste release. IPC-7525 may have alternate design recommendations.
9. Board assembly site may have different recommendations for stencil design.

PW (R–PDSO–G20) PLASTIC SMALL OUTLINE

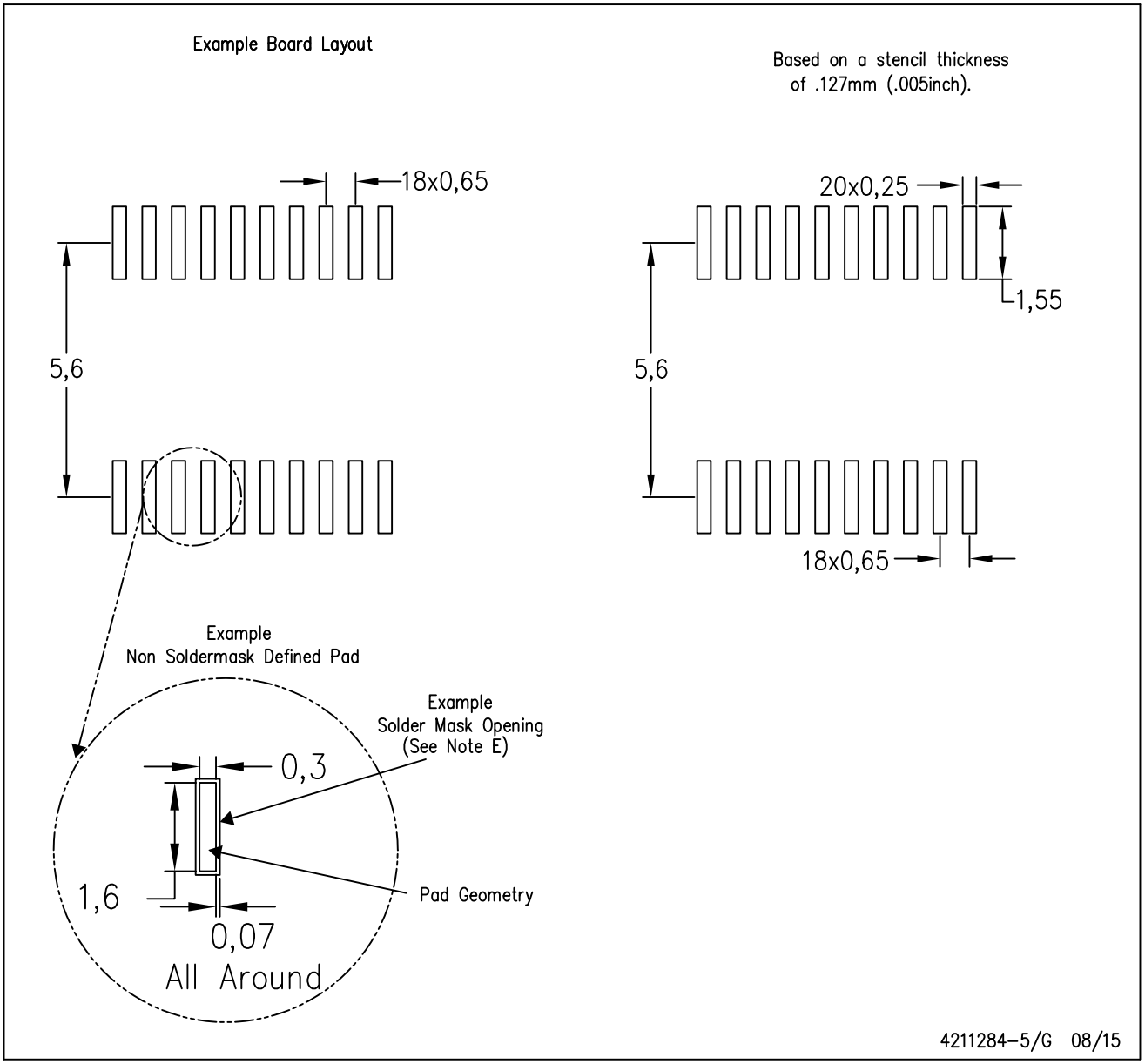

NOTES:
A. All linear dimensions are in millimeters.
B. This drawing is subject to change without notice.
C. Publication IPC–7351 is recommended for alternate design.
D. Laser cutting apertures with trapezoidal walls and also rounding corners will offer better paste release. Customers should contact their board assembly site for stencil design recommendations. Refer to IPC–7525 for other stencil recommendations.
E. Customers should contact their board fabrication site for solder mask tolerances between and around signal pads.

PACKAGE OUTLINE

DB0020A

SSOP - 2 mm max height

SMALL OUTLINE PACKAGE

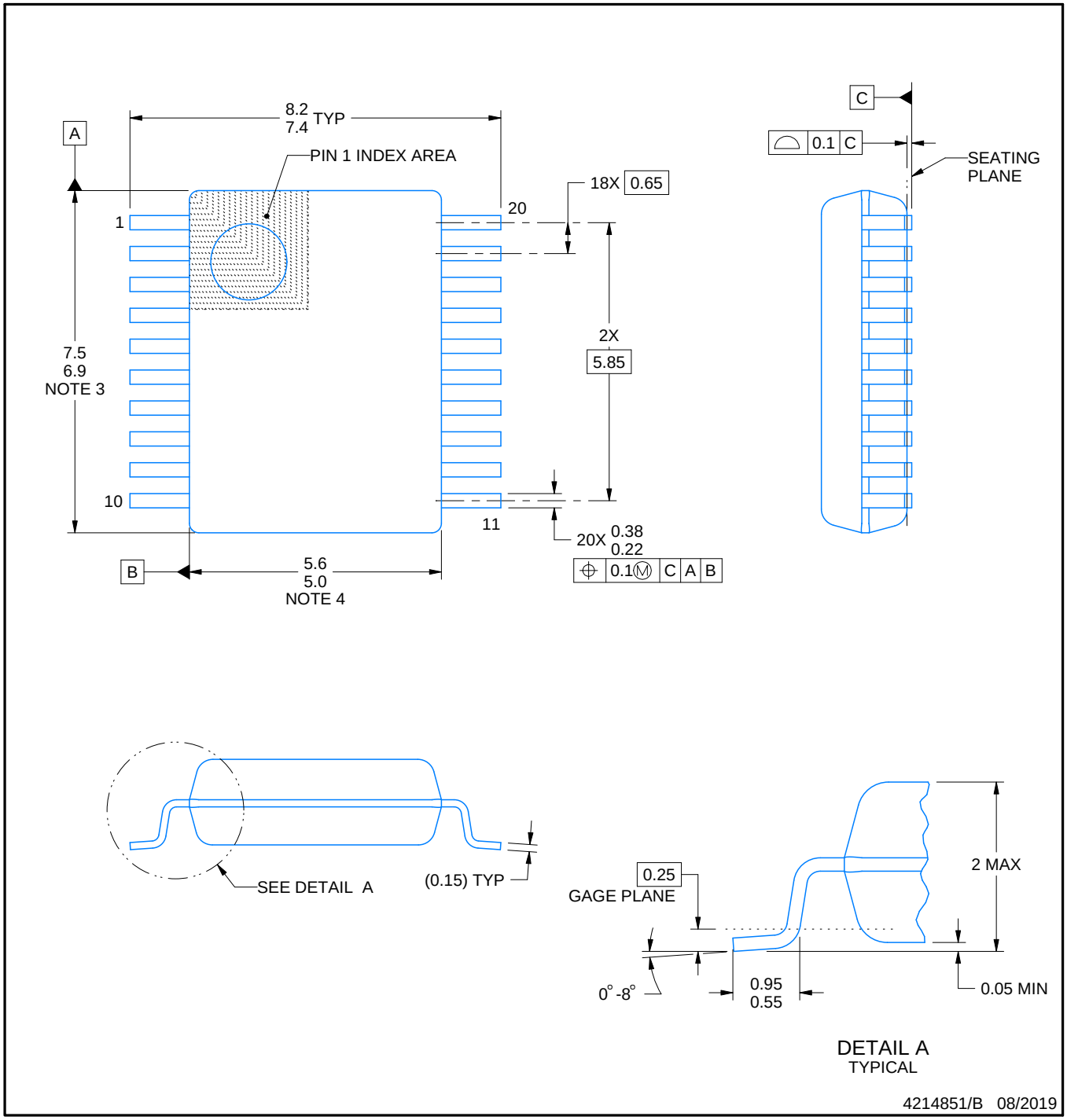

NOTES:

1. All linear dimensions are in millimeters. Any dimensions in parenthesis are for reference only. Dimensioning and tolerancing per ASME Y14.5M.
2. This drawing is subject to change without notice.
3. This dimension does not include mold flash, protrusions, or gate burrs. Mold flash, protrusions, or gate burrs shall not exceed 0.15 mm per side.
4. This dimension does not include interlead flash. Interlead flash shall not exceed 0.25 mm per side.
5. Reference JEDEC registration MO-150.

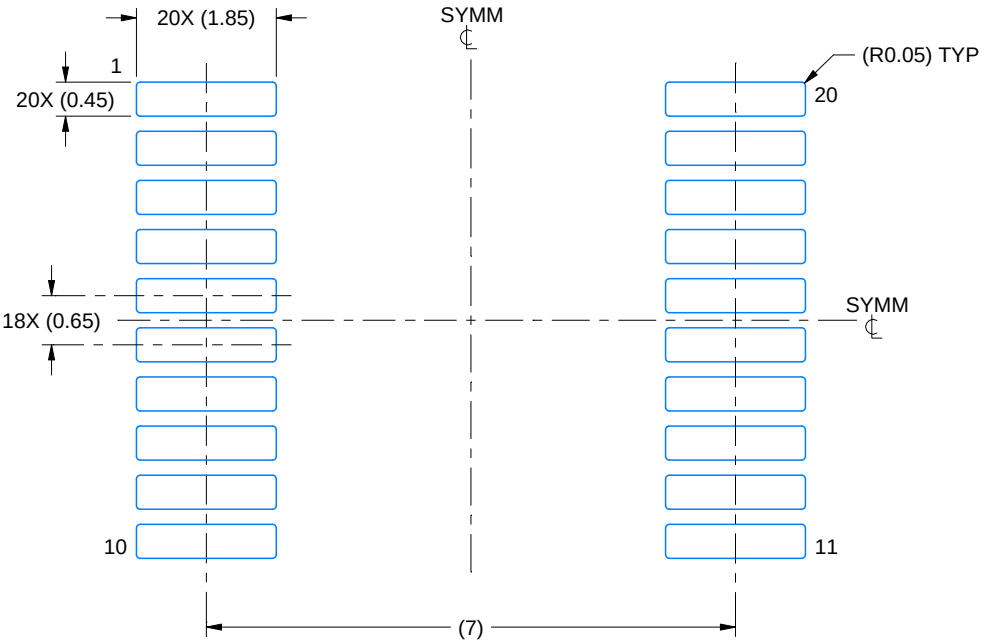

LAND PATTERN EXAMPLE
EXPOSED METAL SHOWN
SCALE: 10X

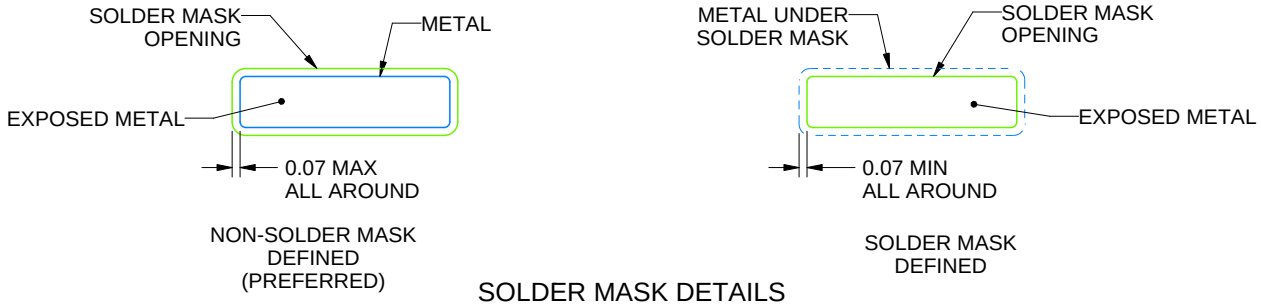

SOLDER MASK DETAILS

4214851/B 08/2019

NOTES: (continued)

6. Publication IPC-7351 may have alternate designs.
7. Solder mask tolerances between and around signal pads can vary based on board fabrication site.

EXAMPLE STENCIL DESIGN

DB0020A

SSOP - 2 mm max height

SMALL OUTLINE PACKAGE

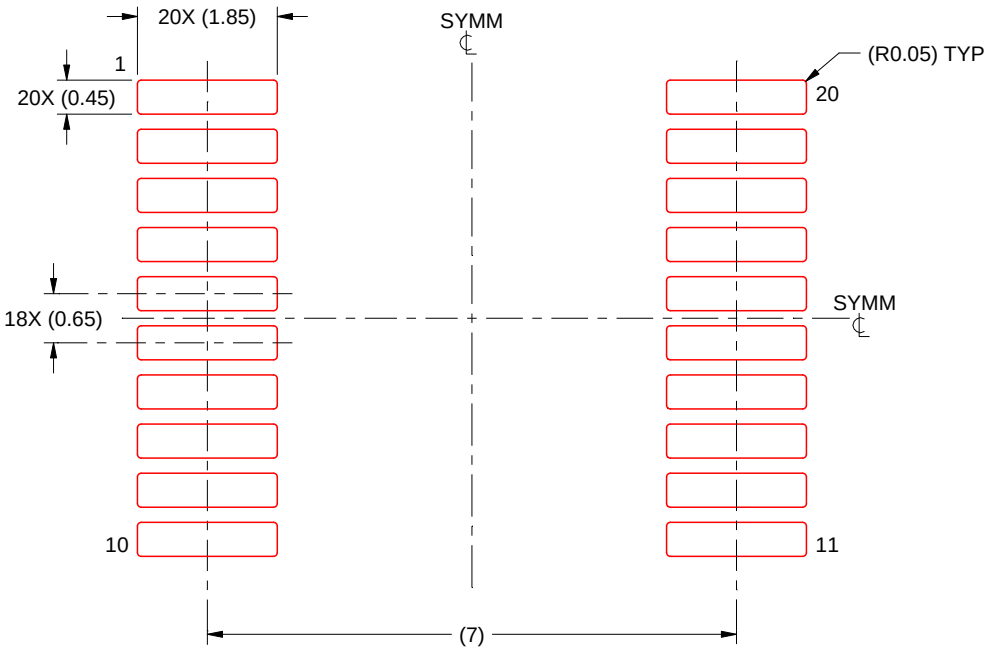

SOLDER PASTE EXAMPLE
BASED ON 0.125 mm THICK STENCIL
SCALE: 10X

4214851/B 08/2019

NOTES: (continued)

8. Laser cutting apertures with trapezoidal walls and rounded corners may offer better paste release. IPC-7525 may have alternate design recommendations.
9. Board assembly site may have different recommendations for stencil design.

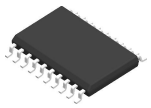

PACKAGE OUTLINE

DW0020A

SOIC - 2.65 mm max height

SOIC

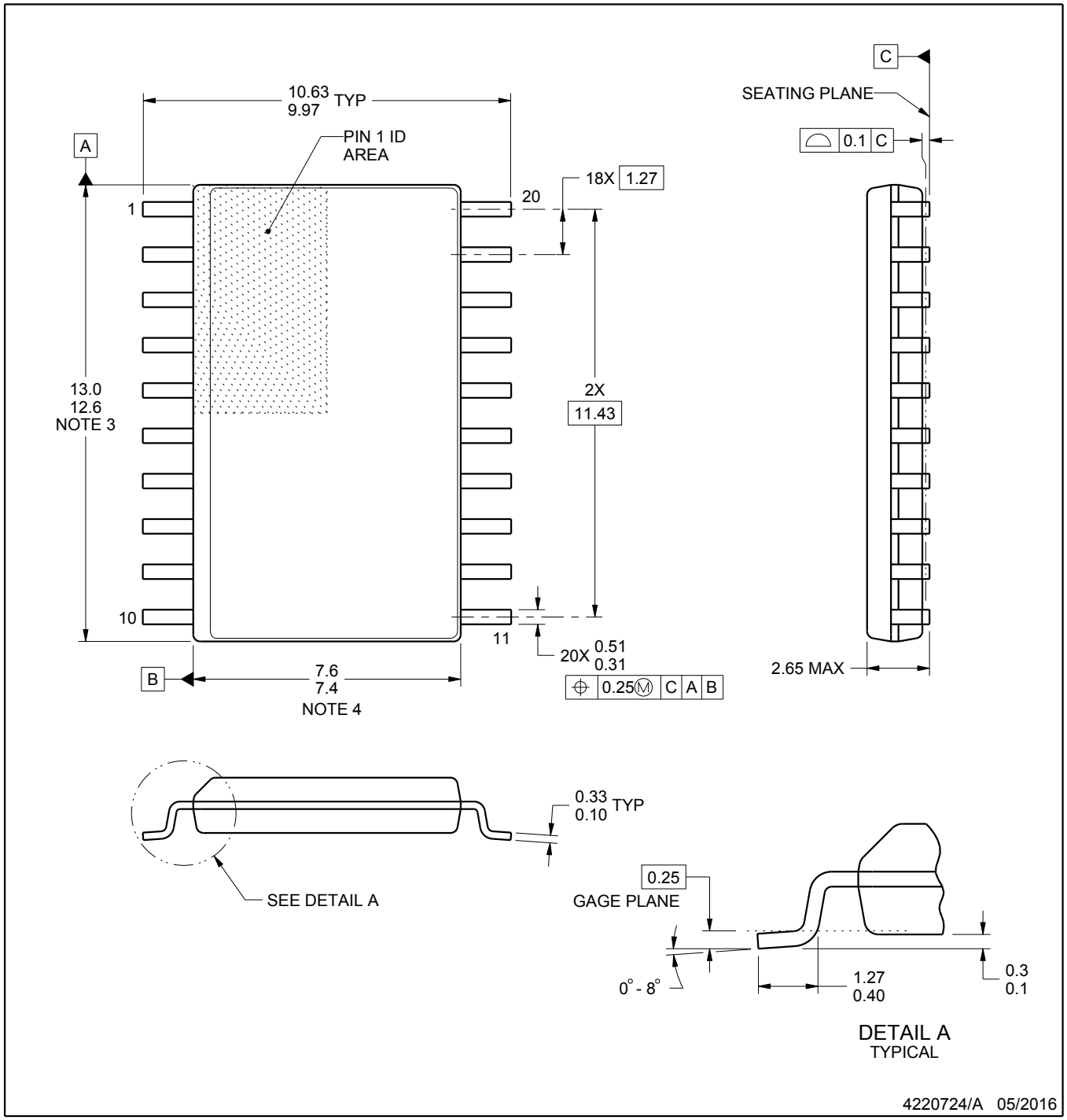

NOTES:

1. All linear dimensions are in millimeters. Dimensions in parenthesis are for reference only. Dimensioning and tolerancing per ASME Y14.5M.
2. This drawing is subject to change without notice.
3. This dimension does not include mold flash, protrusions, or gate burrs. Mold flash, protrusions, or gate burrs shall not exceed 0.15 mm per side.
4. This dimension does not include interlead flash. Interlead flash shall not exceed 0.43 mm per side.
5. Reference JEDEC registration MS-013.

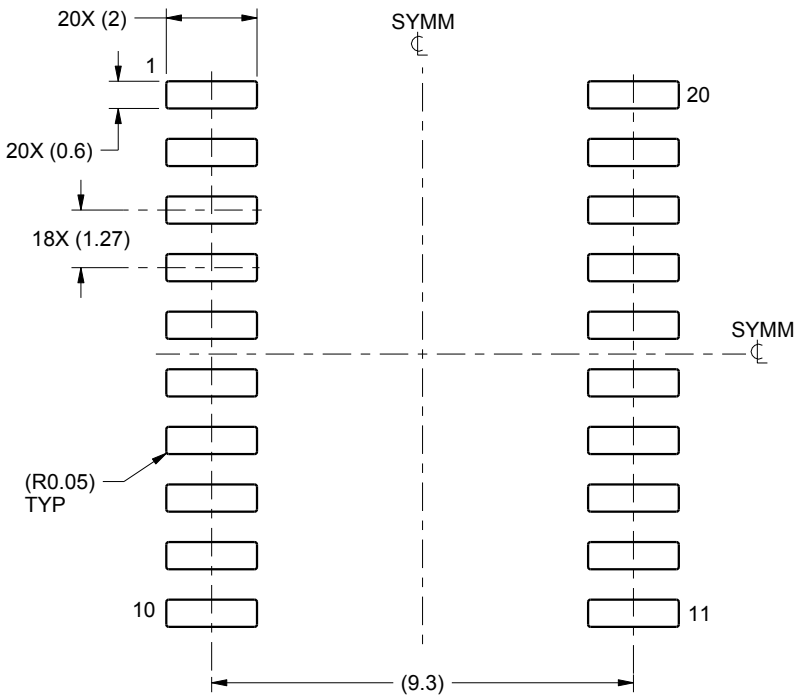

LAND PATTERN EXAMPLE
SCALE:6X

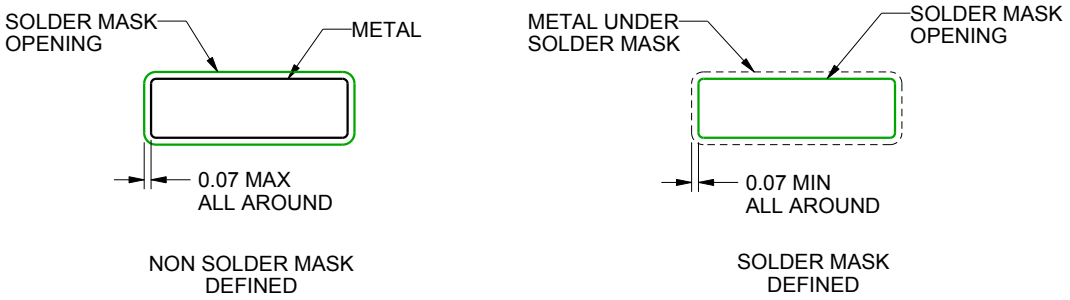

SOLDER MASK DETAILS

4220724/A 05/2016

NOTES: (continued)

6. Publication IPC-7351 may have alternate designs.
7. Solder mask tolerances between and around signal pads can vary based on board fabrication site.

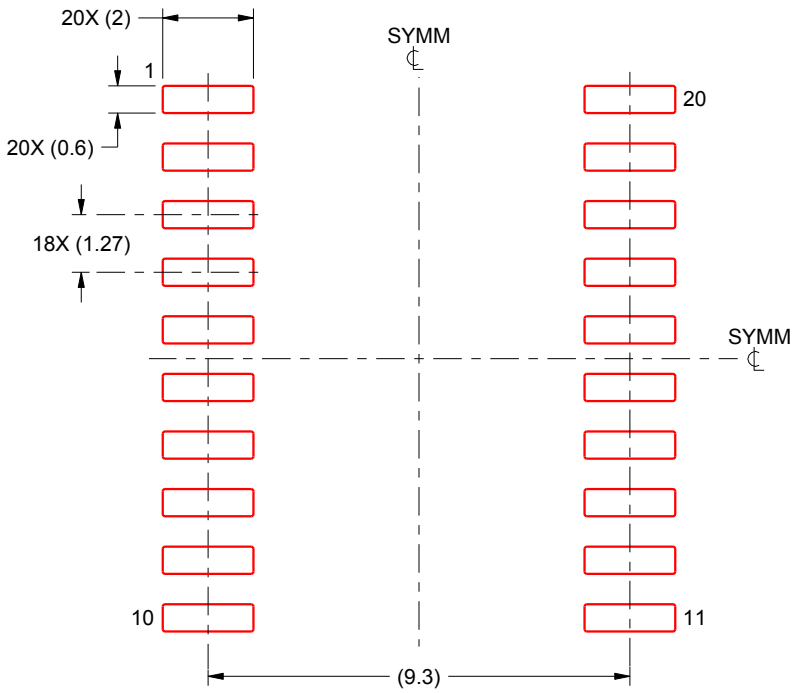

SOLDER PASTE EXAMPLE
BASED ON 0.125 mm THICK STENCIL
SCALE:6X

4220724/A 05/2016

NOTES: (continued)

8. Laser cutting apertures with trapezoidal walls and rounded corners may offer better paste release. IPC-7525 may have alternate design recommendations.
9. Board assembly site may have different recommendations for stencil design.

重要声明和免责声明

TI“按原样”提供技术和可靠性数据（包括数据表）、设计资源（包括参考设计）、应用或其他设计建议、网络工具、安全信息和其他资源，不保证没有瑕疵且不做出任何明示或暗示的担保，包括但不限于对适销性、某特定用途方面的适用性或不侵犯任何第三方知识产权的暗示担保。

这些资源可供使用 TI 产品进行设计的熟练开发人员使用。您将自行承担以下全部责任：(1) 针对您的应用选择合适的 TI 产品，(2) 设计、验证并测试您的应用，(3) 确保您的应用满足相应标准以及任何其他功能安全、信息安全、监管或其他要求。

这些资源如有变更，恕不另行通知。TI 授权您仅可将这些资源用于研发本资源所述的 TI 产品的应用。严禁对这些资源进行其他复制或展示。您无权使用任何其他 TI 知识产权或任何第三方知识产权。您应全额赔偿因在这些资源的使用中对 TI 及其代表造成的任何索赔、损害、成本、损失和债务，TI 对此概不负责。

TI 提供的产品受 TI 的销售条款或 ti.com 上其他适用条款/TI 产品随附的其他适用条款的约束。TI 提供这些资源并不会扩展或以其他方式更改 TI 针对 TI 产品发布的适用的担保或担保免责声明。

TI 反对并拒绝您可能提出的任何其他或不同的条款。

邮寄地址：Texas Instruments, Post Office Box 655303, Dallas, Texas 75265
Copyright © 2022，德州仪器 (TI) 公司