SLOS069C – FEBRUARY 1971 – REVISED AUGUST 2010

- **Short-Circuit Protection**
- **Wide Common-Mode and Differential Voltage Ranges**
- **No Frequency Compensation Required**
- **Low Power Consumption**
- **No Latch-Up**
- **Designed to Be Interchangeable With Motorola MC1558/MC1458 and Signetics S5558/N5558**

MC1458 . . . D, P, OR PS PACKAGE
MC1558 . . . JG PACKAGE
(TOP VIEW)

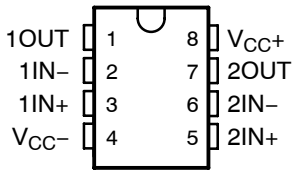

MC1558 . . . FK PACKAGE
(TOP VIEW)

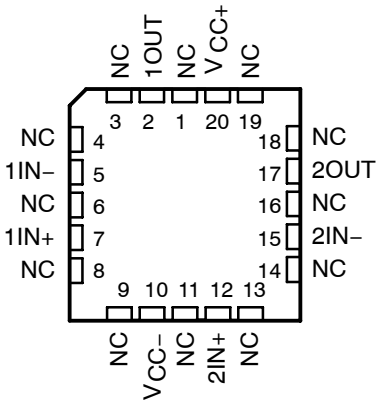

NC – No internal connection

description/ordering information

The MC1458 and MC1558 are dual general-purpose operational amplifiers, with each half electrically similar to the μA741, except that offset null capability is not provided.

The high-common-mode input voltage range and the absence of latch-up make these amplifiers ideal for voltage-follower applications. The devices are short-circuit protected and the internal frequency compensation ensures stability without external components.

ORDERING INFORMATION

T_A	V_{IO}max AT 25°C	PACKAGE†		ORDERABLE PART NUMBER	TOP-SIDE MARKING
0°C to 70°C	6 mV	PDIP (P)	Tube	MC1458P	MC1458P
		SOIC (D)	Tube	MC1458D	MC1458
			Tape and reel	MC1458DR	
		SOP (PS)	Tape and reel	MC1458PSR	M1458
–55°C to 125°C	5 mV	CDIP (JG)	Tube	MC1558JG	MC1558JG
		CDIP (JGB)	Tube	MC1558JGB	MC1558JGB
		LCCC (FK)	Tube	MC1558FK	MC1558FK

† Package drawings, standard packing quantities, thermal data, symbolization, and PCB design guidelines are available at www.ti.com/sc/package.

PRODUCTION DATA information is current as of publication date. Products conform to specifications per the terms of Texas Instruments standard warranty. Production processing does not necessarily include testing of all parameters.

Copyright © 2002, Texas Instruments Incorporated

On products compliant to MIL-PRF-38535, all parameters are tested unless otherwise noted. On all other products, production processing does not necessarily include testing of all parameters.

TEXAS INSTRUMENTS
POST OFFICE BOX 655303 • DALLAS, TEXAS 75265
POST OFFICE BOX 1443 • HOUSTON, TEXAS 77251–1443

symbol (each amplifier)

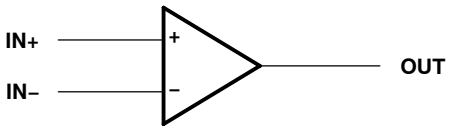

schematic (each amplifier)

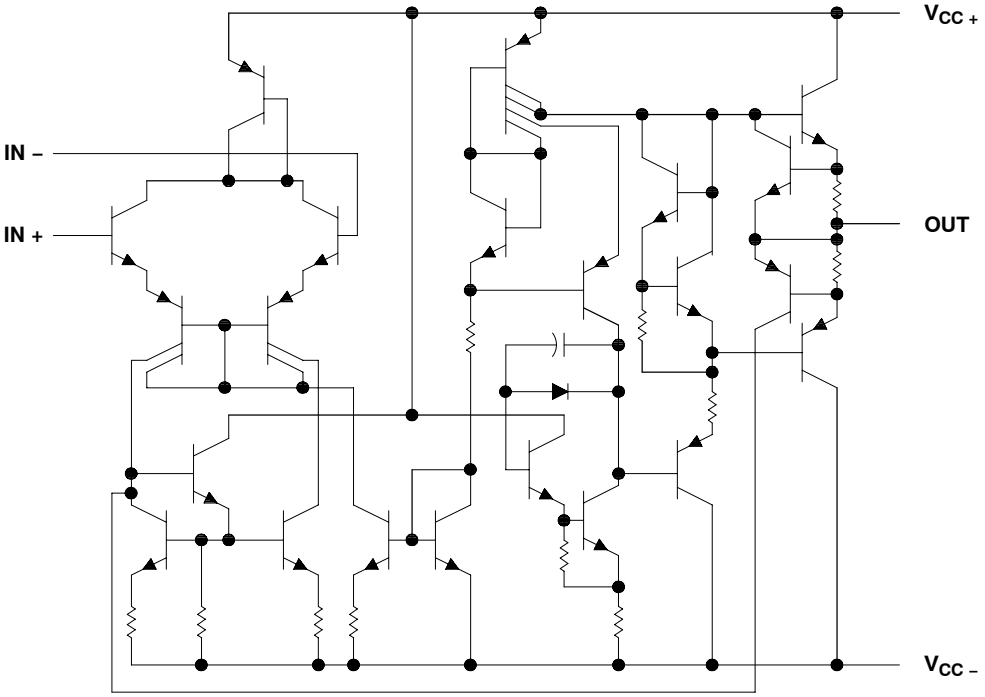

absolute maximum ratings over operating free-air temperature range (unless otherwise noted)†

Supply voltage, V_{CC+} (see Note 1):	MC1458	18 V
	MC1558	22 V
Supply voltage, V_{CC-} (see Note 1):	MC1458	–18 V
	MC1558	–22 V
Differential input voltage, V_{ID} (see Note 2)		±30 V
Input voltage, V_I (either input, see Notes 1 and 3)		±15 V
Duration of output short circuit (see Note 4)		Unlimited
Operating virtual junction temperature, T_J		150°C
Package thermal impedance, θ_{JA} (see Notes 5 and 6):	D package	97°C/W
	P package	85°C/W
	PS package	95°C/W
Package thermal impedance, θ_{JC} (see Notes 7 and 8):	FK package	5.61°C/W
	JG package	14.5°C/W
Case temperature for 60 seconds: FK package		260°C
Lead temperature 1,6 mm (1/16 inch) from case for 10 seconds: JG package		300°C
Lead temperature 1,6 mm (1/16 inch) from case for 60 seconds: D, P, or PS package		260°C
Storage temperature range, T_{stg}		–65°C to 150°C

† Stresses beyond those listed under “absolute maximum ratings” may cause permanent damage to the device. These are stress ratings only, and functional operation of the device at these or any other conditions beyond those indicated under “recommended operating conditions” is not implied. Exposure to absolute-maximum-rated conditions for extended periods may affect device reliability.

NOTES:
1. All voltage values, unless otherwise noted, are with respect to the midpoint between V_{CC+} and V_{CC-}.
2. Differential voltages are at IN+ with respect to IN–.
3. The magnitude of the input voltage must never exceed the magnitude of the supply voltage or 15 V, whichever is less.
4. The output can be shorted to ground or either power supply. For the MC1558 only, the unlimited duration of the short circuit applies at (or below) 125°C case temperature or 70°C free-air temperature.
5. Maximum power dissipation is a function of $T_J(max)$, θ_{JA}, and T_A. The maximum allowable power dissipation at any allowable ambient temperature is $P_D = (T_J(max) - T_A)/\theta_{JA}$. Operating at the absolute maximum T_J of 150°C can affect reliability.
6. The package thermal impedance is calculated in accordance with JESD 51-7.
7. Maximum power dissipation is a function of $T_J(max)$, θ_{JC}, and T_C. The maximum allowable power dissipation at any allowable case temperature is $P_D = (T_J(max) - T_C)/\theta_{JC}$. Operating at the absolute maximum T_J of 150°C can affect reliability.
8. The package thermal impedance is calculated in accordance with MIL-STD-883.

recommended operating conditions

			MIN	MAX	UNIT
$V_{CC\pm}$	Supply voltage		±5	±15	V
T_A	Operating free-air temperature range	MC1458	0	70	°C
		MC1558	–55	125	

electrical characteristics at specified free-air temperature, $V_{CC\pm} = \pm 15$ V

PARAMETER		TEST CONDITIONS†		MC1458			MC1558			UNIT
				MIN	TYP	MAX	MIN	TYP	MAX	
V_{IO}	Input offset voltage	$V_O = 0$	25°C		1	6		1	5	mV
			Full range			7.5			6	
I_{IO}	Input offset current	$V_O = 0$	25°C		20	200		20	200	nA
			Full range			300			500	
I_{IB}	Input bias current	$V_O = 0$	25°C		80	500		80	500	nA
			Full range			800			1500	
V_{ICR}	Common-mode input voltage range		25°C	±12	±13		±12	±13		V
			Full range	±12			±12			
V_{OM}	Maximum peak output voltage swing	$R_L = 10$ kΩ	25°C	±12	±14		±12	±14		V
		$R_L \geq 10$ kΩ	Full range	±12			±11			
		$R_L = 2$ kΩ	25°C	±10	±13		±10	±13		
		$R_L \geq 2$ kΩ	Full range	±10			±10			
A_{VD}	Large-signal differential voltage amplification	$R_L \geq 2$ kΩ, $V_O = \pm 10$ V	25°C	20	200		50	200		V/mV
			Full range	15			25			
B_{OM}	Maximum-output-swing bandwidth (closed loop)	$R_L = 2$ kΩ, $V_O \geq \pm 10$ V, $A_{VD} = 1$, THD ≥ 5%	25°C		14			14		kHz
B_1	Unity-gain bandwidth		25°C		1			1		MHz
ϕm	Phase margin	$A_{VD} = 1$	25°C		65			65		deg
	Gain margin		25°C		11			11		dB
r_i	Input resistance		25°C	0.3	2		0.3*	2		MΩ
r_o	Output resistance	$V_O = 0$, See Note 9	25°C		75			75		Ω
C_i	Input capacitance		25°C		1.4			1.4		pF
z_{ic}	Common-mode input impedance	f = 20 Hz	25°C		200			200		MΩ
CMRR	Common-mode rejection ratio	$V_{IC} = V_{ICR}$ min, $V_O = 0$	25°C	70	90		70	90		dB
			Full range	70			70			
k_{SVS}	Supply-voltage sensitivity ($\Delta V_{IO}/\Delta V_{CC}$)	$V_{CC} = \pm 9$ V to ±15 V, $V_O = 0$	25°C		30	150		30	150	μV/V
			Full range			150			150	
V_n	Equivalent input noise voltage (closed loop)	$A_{VD} = 100$, $R_S = 0$, f = 1 kHz, BW = 1 Hz	25°C		45			45		nV/√Hz
I_{OS}	Short-circuit output current		25°C		±25	±40		±25	±40	mA
I_{CC}	Supply current (both amplifiers)	$V_O = 0$, No load	25°C		3.4	5.6		3.4	5	mA
			Full range			6.6			6.6	
P_D	Total power dissipation (both amplifiers)	$V_O = 0$, No load	25°C		100	170		100	150	mW
			Full range			200			200	
V_{O1}/V_{O2}	Crosstalk attenuation		25°C		120			120		dB

*On products compliant to MIL-PRF-38535, this parameter is not production tested.

† All characteristics are specified under open-loop operating conditions with zero common-mode input voltage, unless otherwise specified. Full range for MC1458 is 0°C to 70°C and for MC1558 is −55°C to 125°C.

NOTE 9: This typical value applies only at frequencies above a few hundred hertz because of the effect of drift and thermal feedback.

operating characteristics, $V_{CC\pm}$ = ±15 V, C_L = 100 pF, T_A = 25°C (see Figure 1)

PARAMETER		TEST CONDITIONS		MC1458			MC1558			UNIT
				MIN	TYP	MAX	MIN	TYP	MAX	
t_r	Rise time	V_I = 20 mV,	R_L = 2 kΩ,		0.3			0.3		µs
	Overshoot factor	V_I = 20 mV,	R_L = 2 kΩ		5			5		%
SR	Slew rate at unity gain	V_I = 10 V,	R_L = 2 kΩ		0.5			0.5		V/µs

PARAMETER MEASUREMENT INFORMATION

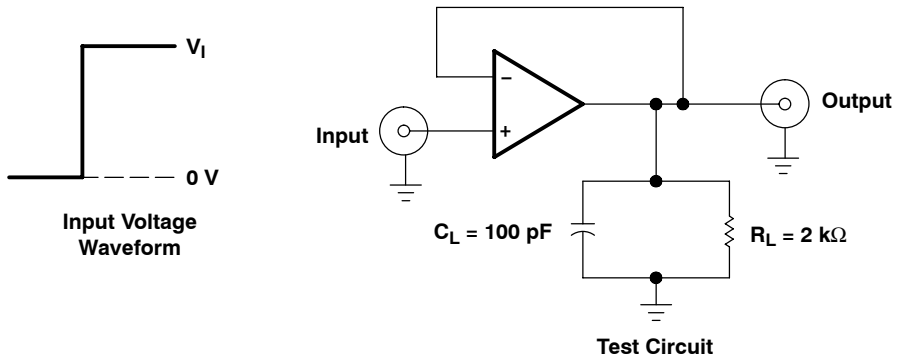

Figure 1. Rise-Time, Overshoot, and Slew-Rate Waveform and Test Circuit

PACKAGING INFORMATION

Orderable Device	Status (1)	Package Type	Package Drawing	Pins	Package Qty	Eco Plan (2)	Lead finish/ Ball material (6)	MSL Peak Temp (3)	Op Temp (°C)	Device Marking (4/5)	Samples
5962-9760301Q2A	ACTIVE	LCCC	FK	20	1	Non-RoHS & Green	SNPB	N / A for Pkg Type	-55 to 125	5962-9760301Q2A MC1558FKB	Samples
5962-9760301QPA	ACTIVE	CDIP	JG	8	1	Non-RoHS & Green	SNPB	N / A for Pkg Type	-55 to 125	9760301QPA MC1558	Samples
MC1458D	LIFEBUY	SOIC	D	8	75	RoHS & Green	NIPDAU	Level-1-260C-UNLIM	0 to 70	MC1458	
MC1458DE4	NRND	SOIC	D	8	75	RoHS & Green	NIPDAU	Level-1-260C-UNLIM	0 to 70	MC1458	
MC1458DR	ACTIVE	SOIC	D	8	2500	RoHS & Green	NIPDAU	Level-1-260C-UNLIM	0 to 70	MC1458	Samples
MC1458DRE4	ACTIVE	SOIC	D	8	2500	RoHS & Green	NIPDAU	Level-1-260C-UNLIM	0 to 70	MC1458	Samples
MC1458DRG4	ACTIVE	SOIC	D	8	2500	RoHS & Green	NIPDAU	Level-1-260C-UNLIM	0 to 70	MC1458	Samples
MC1458P	ACTIVE	PDIP	P	8	50	RoHS & Green	NIPDAU	N / A for Pkg Type	0 to 70	MC1458P	Samples
MC1458PE4	ACTIVE	PDIP	P	8	50	RoHS & Green	NIPDAU	N / A for Pkg Type	0 to 70	MC1458P	Samples
MC1458PSR	ACTIVE	SO	PS	8	2000	RoHS & Green	NIPDAU	Level-1-260C-UNLIM	0 to 70	M1458	Samples
MC1558FKB	ACTIVE	LCCC	FK	20	1	Non-RoHS & Green	SNPB	N / A for Pkg Type	-55 to 125	5962-9760301Q2A MC1558FKB	Samples
MC1558JG	ACTIVE	CDIP	JG	8	1	Non-RoHS & Green	SNPB	N / A for Pkg Type	-55 to 125	MC1558JG	Samples
MC1558JGB	ACTIVE	CDIP	JG	8	1	Non-RoHS & Green	SNPB	N / A for Pkg Type	-55 to 125	9760301QPA MC1558	Samples

(1) The marketing status values are defined as follows:
ACTIVE: Product device recommended for new designs.
LIFEBUY: TI has announced that the device will be discontinued, and a lifetime-buy period is in effect.
NRND: Not recommended for new designs. Device is in production to support existing customers, but TI does not recommend using this part in a new design.
PREVIEW: Device has been announced but is not in production. Samples may or may not be available.
OBSOLETE: TI has discontinued the production of the device.

(2) **RoHS:** TI defines "RoHS" to mean semiconductor products that are compliant with the current EU RoHS requirements for all 10 RoHS substances, including the requirement that RoHS substance do not exceed 0.1% by weight in homogeneous materials. Where designed to be soldered at high temperatures, "RoHS" products are suitable for use in specified lead-free processes. TI may reference these types of products as "Pb-Free".

RoHS Exempt: TI defines "RoHS Exempt" to mean products that contain lead but are compliant with EU RoHS pursuant to a specific EU RoHS exemption.
Green: TI defines "Green" to mean the content of Chlorine (Cl) and Bromine (Br) based flame retardants meet JS709B low halogen requirements of <=1000ppm threshold. Antimony trioxide based flame retardants must also meet the <=1000ppm threshold requirement.

(3) MSL, Peak Temp. - The Moisture Sensitivity Level rating according to the JEDEC industry standard classifications, and peak solder temperature.

(4) There may be additional marking, which relates to the logo, the lot trace code information, or the environmental category on the device.

(5) Multiple Device Markings will be inside parentheses. Only one Device Marking contained in parentheses and separated by a "~" will appear on a device. If a line is indented then it is a continuation of the previous line and the two combined represent the entire Device Marking for that device.

(6) Lead finish/Ball material - Orderable Devices may have multiple material finish options. Finish options are separated by a vertical ruled line. Lead finish/Ball material values may wrap to two lines if the finish value exceeds the maximum column width.

Important Information and Disclaimer: The information provided on this page represents TI's knowledge and belief as of the date that it is provided. TI bases its knowledge and belief on information provided by third parties, and makes no representation or warranty as to the accuracy of such information. Efforts are underway to better integrate information from third parties. TI has taken and continues to take reasonable steps to provide representative and accurate information but may not have conducted destructive testing or chemical analysis on incoming materials and chemicals. TI and TI suppliers consider certain information to be proprietary, and thus CAS numbers and other limited information may not be available for release.

In no event shall TI's liability arising out of such information exceed the total purchase price of the TI part(s) at issue in this document sold by TI to Customer on an annual basis.

TAPE AND REEL INFORMATION

REEL DIMENSIONS

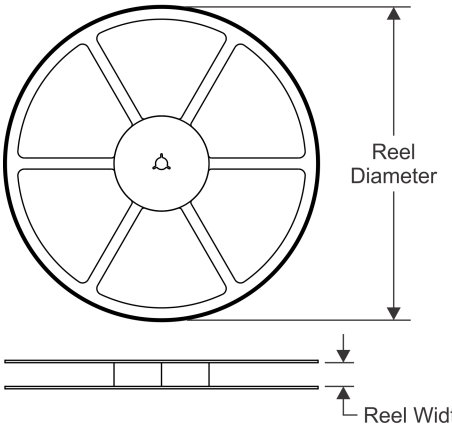

TAPE DIMENSIONS

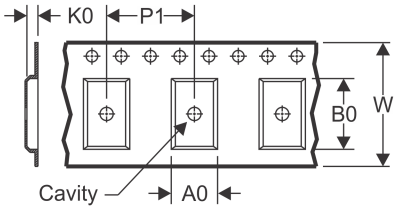

A0	Dimension designed to accommodate the component width
B0	Dimension designed to accommodate the component length
K0	Dimension designed to accommodate the component thickness
W	Overall width of the carrier tape
P1	Pitch between successive cavity centers

QUADRANT ASSIGNMENTS FOR PIN 1 ORIENTATION IN TAPE

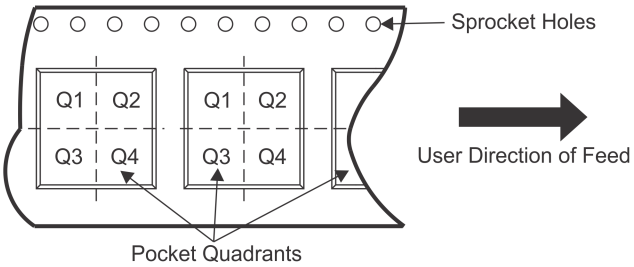

*All dimensions are nominal

Device	Package Type	Package Drawing	Pins	SPQ	Reel Diameter (mm)	Reel Width W1 (mm)	A0 (mm)	B0 (mm)	K0 (mm)	P1 (mm)	W (mm)	Pin1 Quadrant
MC1458DR	SOIC	D	8	2500	330.0	12.4	6.4	5.2	2.1	8.0	12.0	Q1
MC1458DR	SOIC	D	8	2500	330.0	12.4	6.4	5.2	2.1	8.0	12.0	Q1
MC1458DR	SOIC	D	8	2500	330.0	12.4	6.4	5.2	2.1	8.0	12.0	Q1
MC1458DR	SOIC	D	8	2500	330.0	12.4	6.4	5.2	2.1	8.0	12.0	Q1
MC1458PSR	SO	PS	8	2000	330.0	16.4	8.35	6.6	2.4	12.0	16.0	Q1

TAPE AND REEL BOX DIMENSIONS

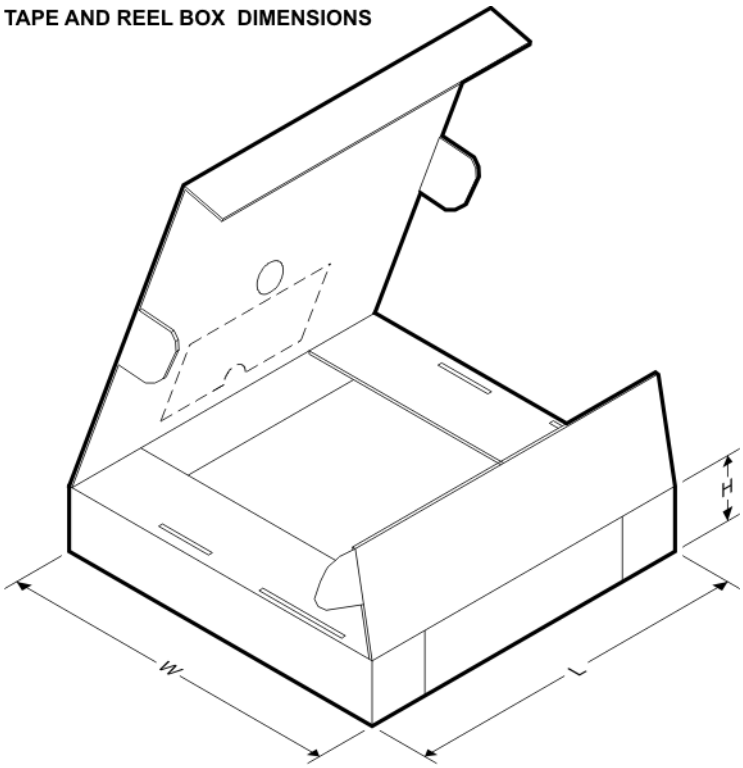

*All dimensions are nominal

Device	Package Type	Package Drawing	Pins	SPQ	Length (mm)	Width (mm)	Height (mm)
MC1458DR	SOIC	D	8	2500	853.0	449.0	35.0
MC1458DR	SOIC	D	8	2500	853.0	449.0	35.0
MC1458DR	SOIC	D	8	2500	340.5	336.1	25.0
MC1458DR	SOIC	D	8	2500	340.5	336.1	25.0
MC1458PSR	SO	PS	8	2000	853.0	449.0	35.0

TUBE

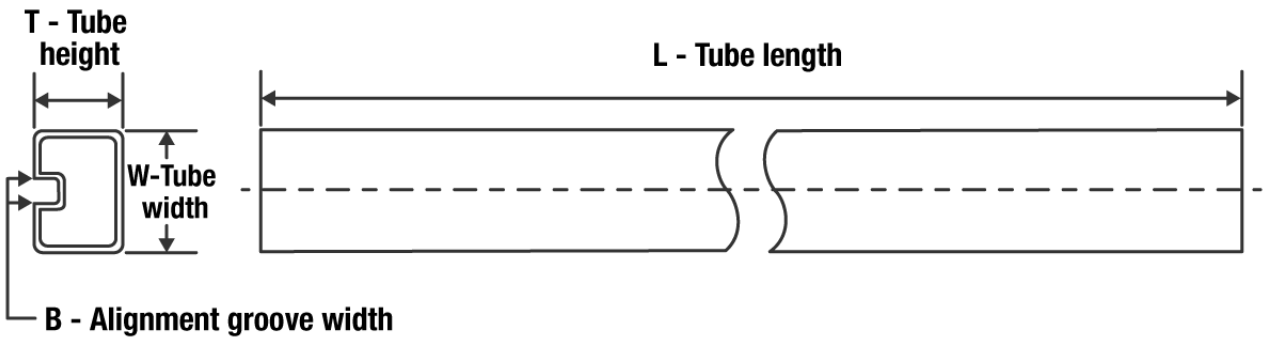

*All dimensions are nominal

Device	Package Name	Package Type	Pins	SPQ	L (mm)	W (mm)	T (µm)	B (mm)
5962-9760301Q2A	FK	LCCC	20	1	506.98	12.06	2030	NA
MC1458D	D	SOIC	8	75	507	8	3940	4.32
MC1458D	D	SOIC	8	75	506.6	8	3940	4.32
MC1458DE4	D	SOIC	8	75	506.6	8	3940	4.32
MC1458DE4	D	SOIC	8	75	507	8	3940	4.32
MC1458P	P	PDIP	8	50	506	13.97	11230	4.32
MC1458PE4	P	PDIP	8	50	506	13.97	11230	4.32
MC1558FKB	FK	LCCC	20	1	506.98	12.06	2030	NA

FK (S–CQCC–N**) LEADLESS CERAMIC CHIP CARRIER

28 TERMINAL SHOWN

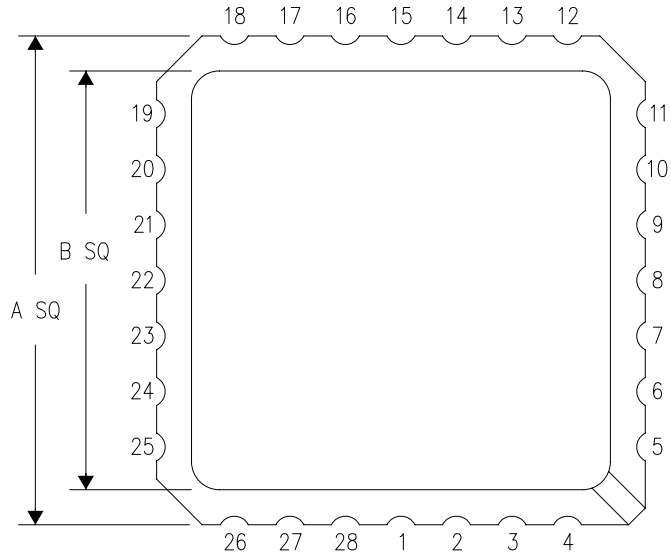

NO. OF TERMINALS **	A		B	
	MIN	MAX	MIN	MAX
20	0.342 (8,69)	0.358 (9,09)	0.307 (7,80)	0.358 (9,09)
28	0.442 (11,23)	0.458 (11,63)	0.406 (10,31)	0.458 (11,63)
44	0.640 (16,26)	0.660 (16,76)	0.495 (12,58)	0.560 (14,22)
52	0.740 (18,78)	0.761 (19,32)	0.495 (12,58)	0.560 (14,22)
68	0.938 (23,83)	0.962 (24,43)	0.850 (21,6)	0.858 (21,8)
84	1.141 (28,99)	1.165 (29,59)	1.047 (26,6)	1.063 (27,0)

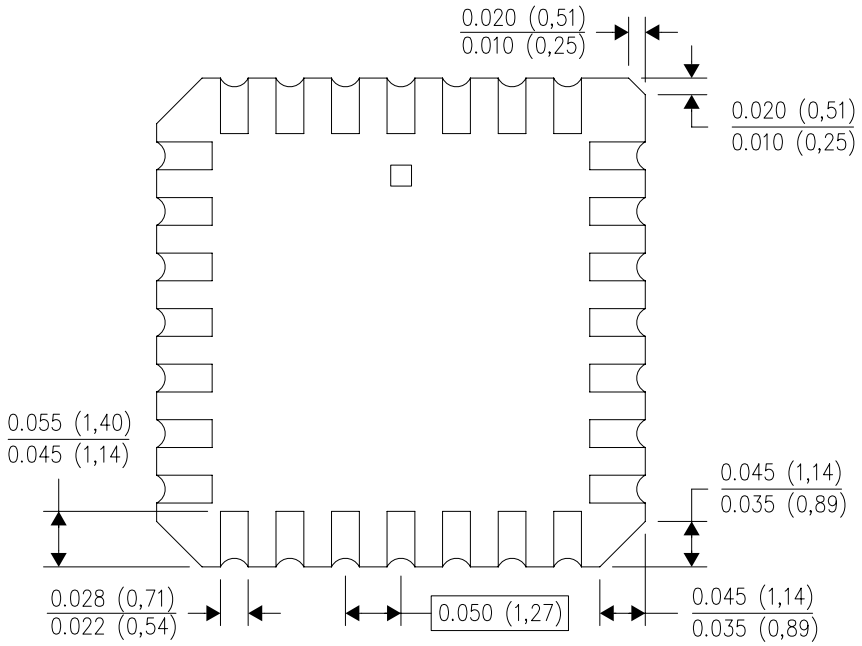

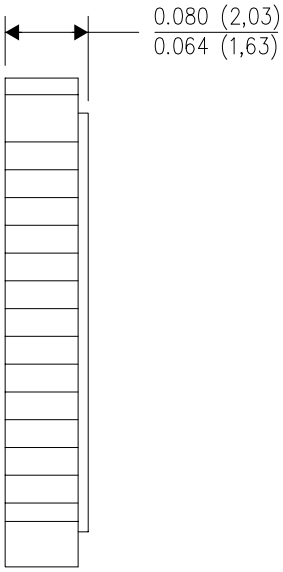

4040140/D 01/11

NOTES:
A. All linear dimensions are in inches (millimeters).
B. This drawing is subject to change without notice.
C. This package can be hermetically sealed with a metal lid.
D. Falls within JEDEC MS–004

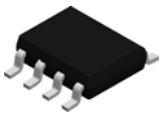

PACKAGE OUTLINE

D0008A

SOIC - 1.75 mm max height

SMALL OUTLINE INTEGRATED CIRCUIT

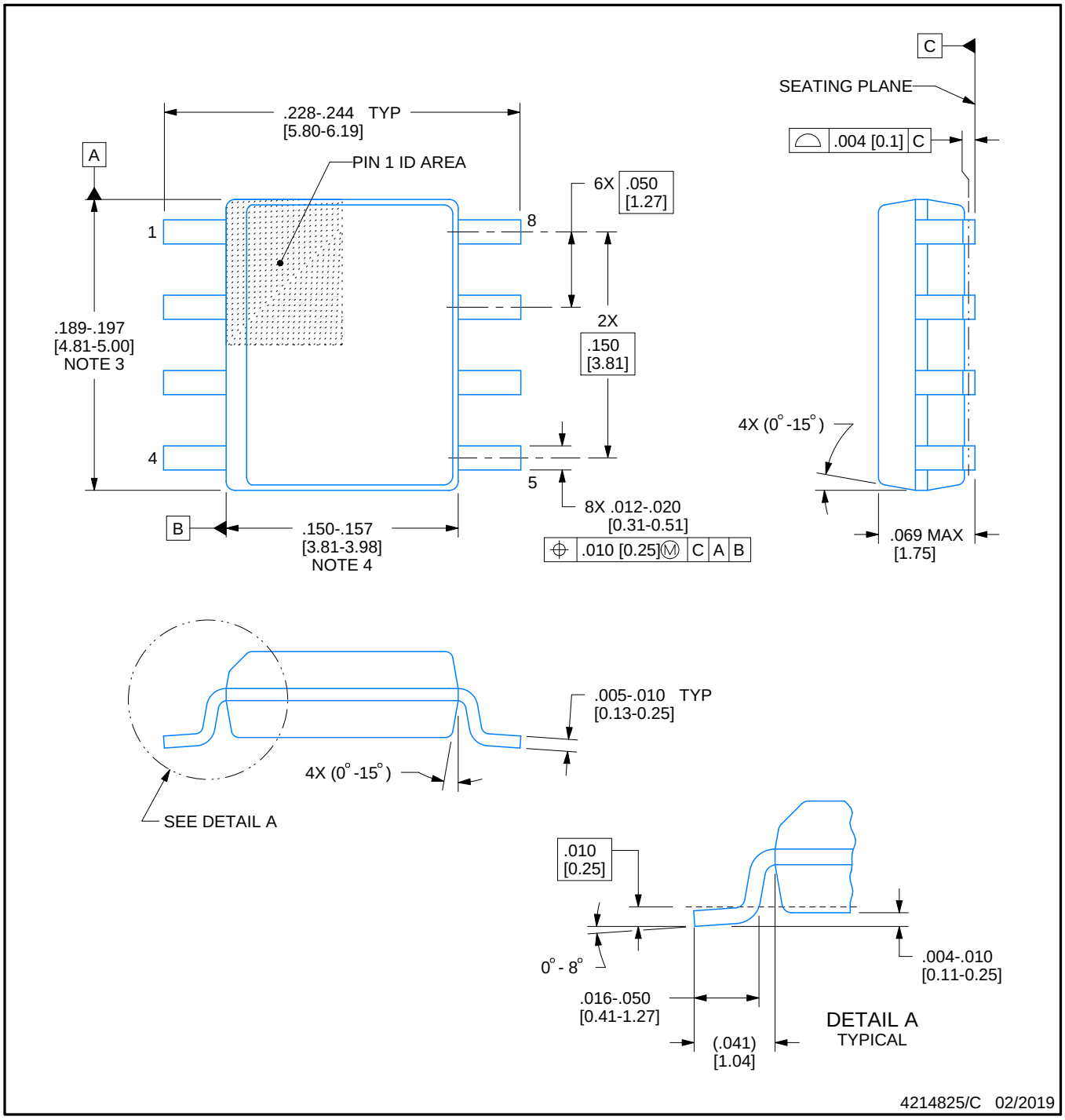

NOTES:

1. Linear dimensions are in inches [millimeters]. Dimensions in parenthesis are for reference only. Controlling dimensions are in inches. Dimensioning and tolerancing per ASME Y14.5M.
2. This drawing is subject to change without notice.
3. This dimension does not include mold flash, protrusions, or gate burrs. Mold flash, protrusions, or gate burrs shall not exceed .006 [0.15] per side.
4. This dimension does not include interlead flash.
5. Reference JEDEC registration MS-012, variation AA.

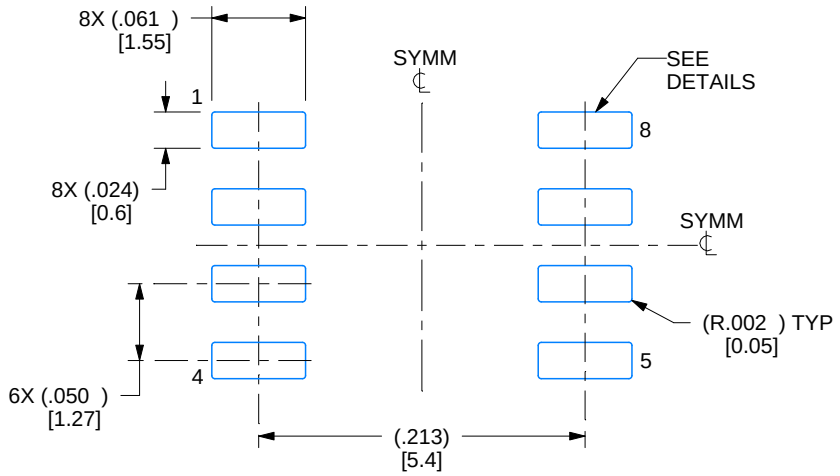

LAND PATTERN EXAMPLE
EXPOSED METAL SHOWN
SCALE:8X

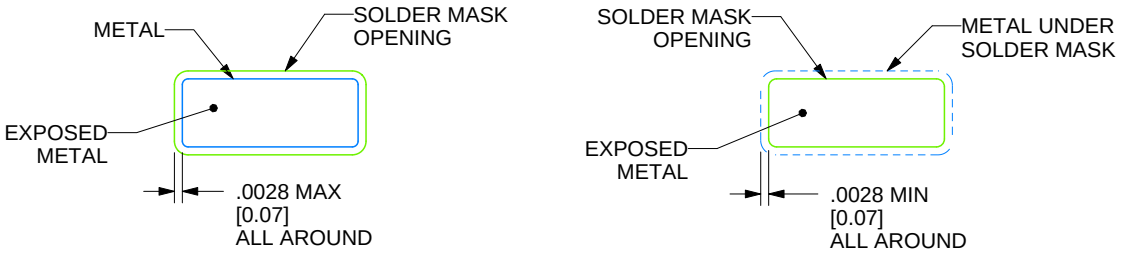

SOLDER MASK DETAILS

4214825/C 02/2019

NOTES: (continued)

6. Publication IPC-7351 may have alternate designs.
7. Solder mask tolerances between and around signal pads can vary based on board fabrication site.

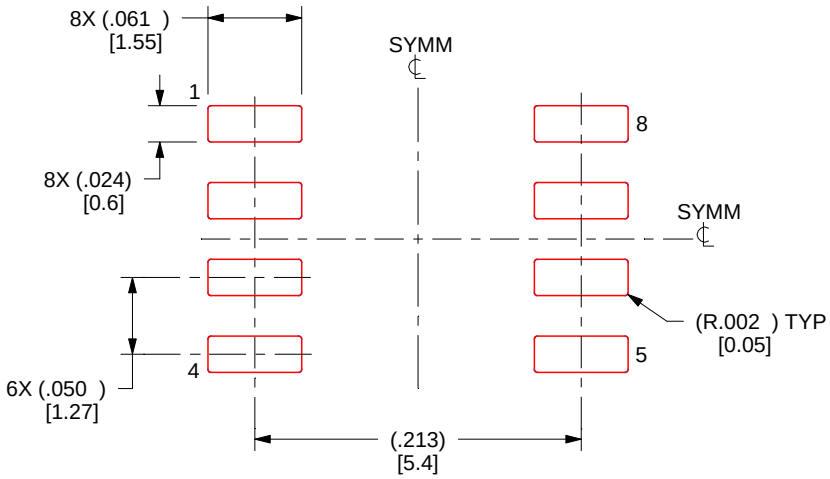

SOLDER PASTE EXAMPLE
BASED ON .005 INCH [0.125 MM] THICK STENCIL
SCALE:8X

4214825/C 02/2019

NOTES: (continued)

8. Laser cutting apertures with trapezoidal walls and rounded corners may offer better paste release. IPC-7525 may have alternate design recommendations.
9. Board assembly site may have different recommendations for stencil design.

MECHANICAL DATA

PS (R-PDSO-G8) **PLASTIC SMALL-OUTLINE PACKAGE**

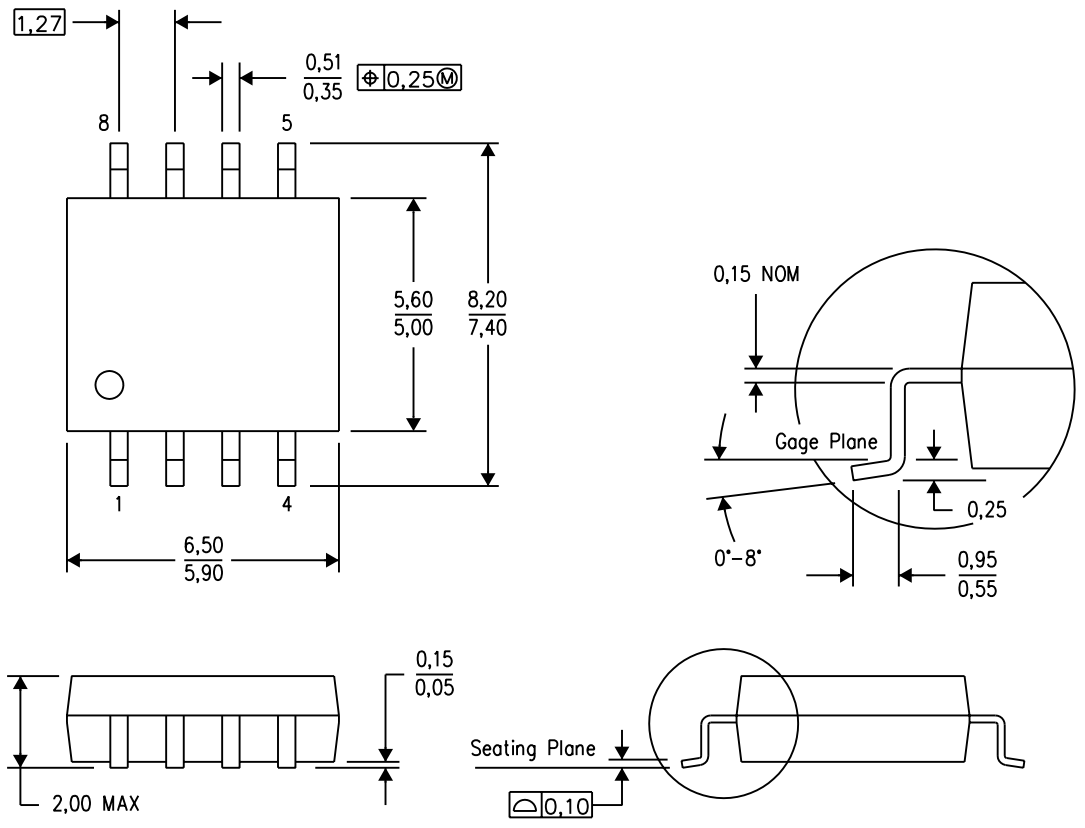

NOTES:
A. All linear dimensions are in millimeters.
B. This drawing is subject to change without notice.
C. Body dimensions do not include mold flash or protrusion, not to exceed 0,15.

PS (R-PDSO-G8) PLASTIC SMALL OUTLINE

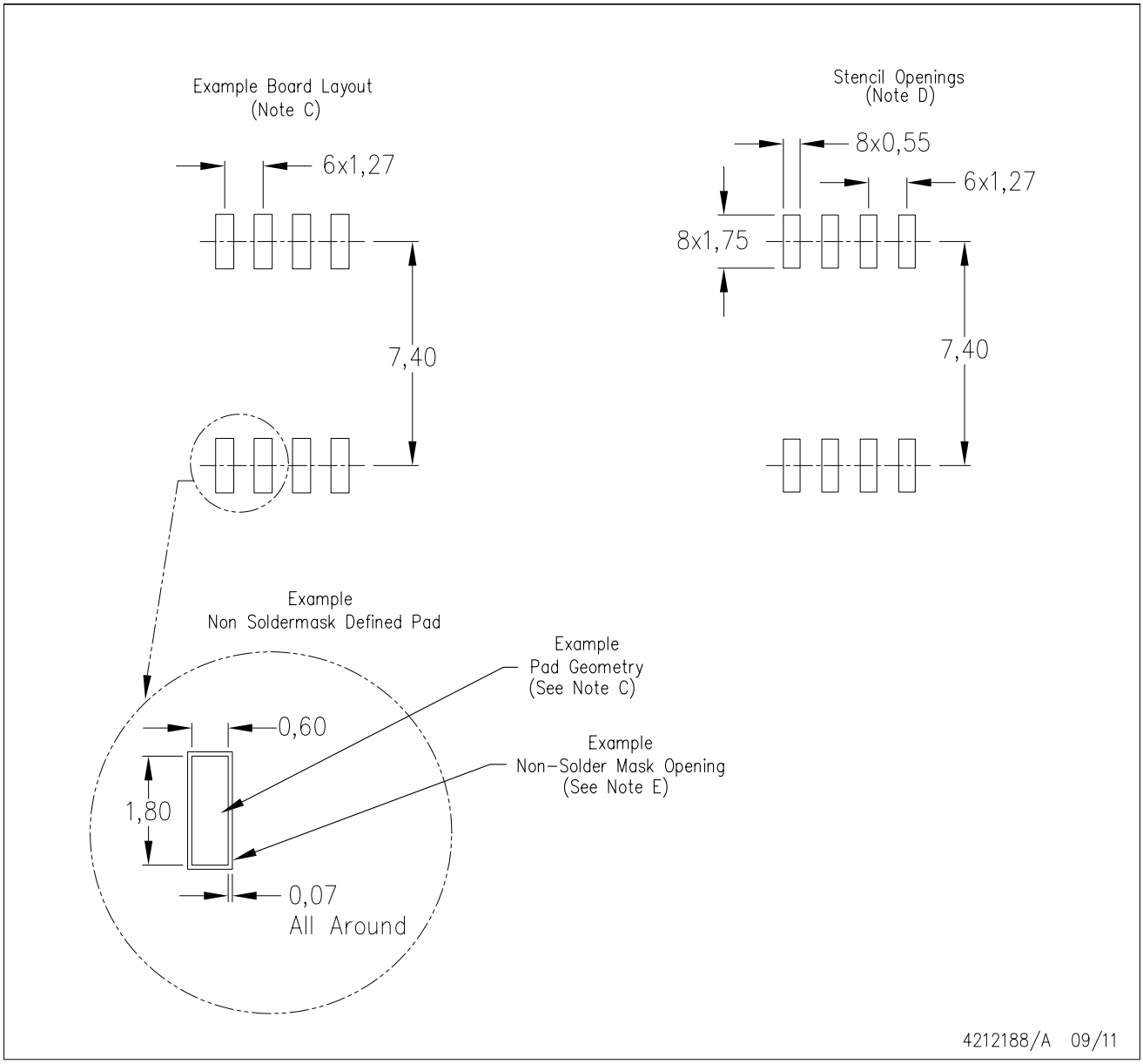

NOTES:
A. All linear dimensions are in millimeters.
B. This drawing is subject to change without notice.
C. Publication IPC-7351 is recommended for alternate designs.
D. Laser cutting apertures with trapezoidal walls and also rounding corners will offer better paste release. Customers should contact their board assembly site for stencil design recommendations. Refer to IPC-7525 for other stencil recommendations.
E. Customers should contact their board fabrication site for solder mask tolerances between and around signal pads.

JG (R-GDIP-T8) **CERAMIC DUAL-IN-LINE**

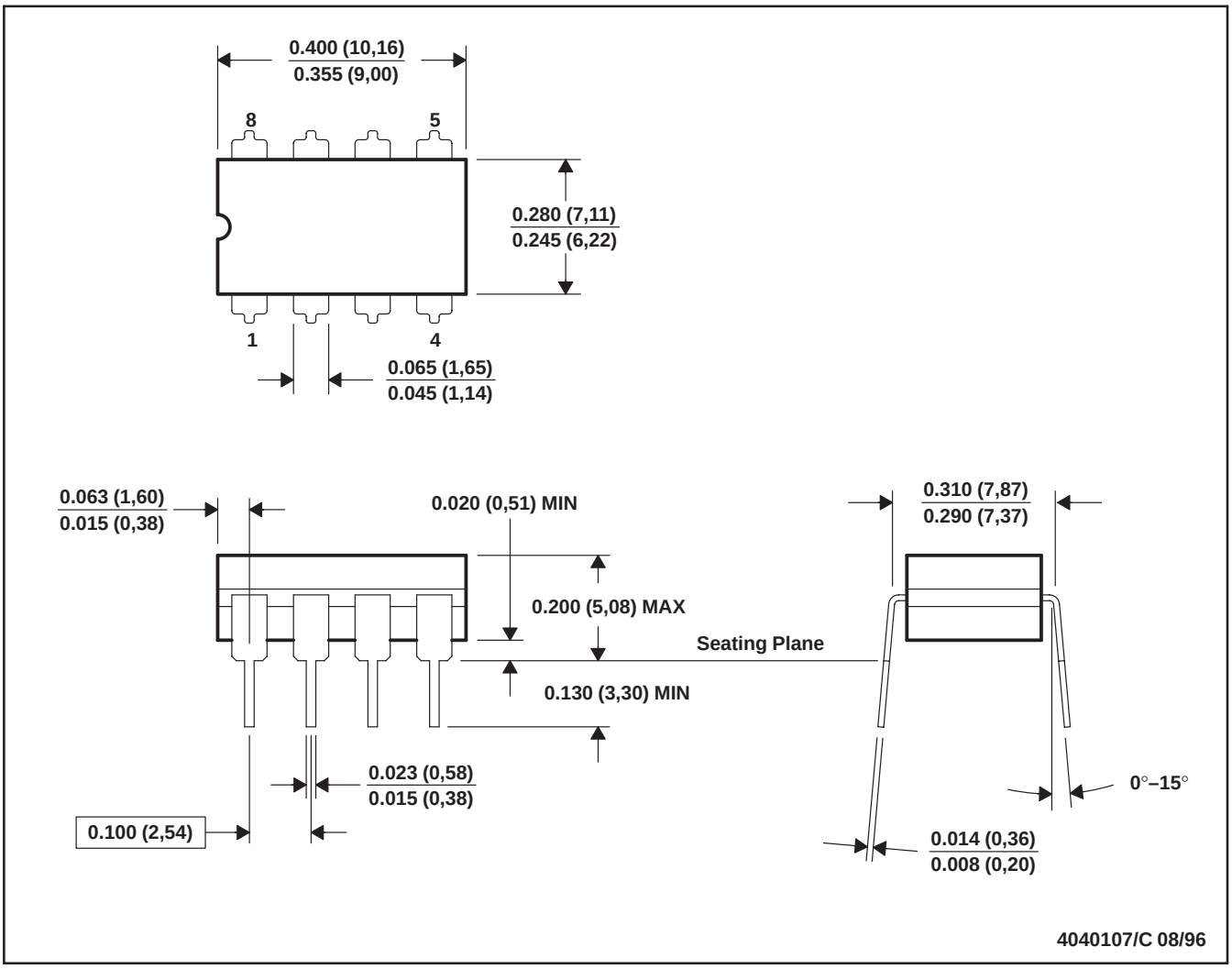

NOTES: A. All linear dimensions are in inches (millimeters).
B. This drawing is subject to change without notice.
C. This package can be hermetically sealed with a ceramic lid using glass frit.
D. Index point is provided on cap for terminal identification.
E. Falls within MIL STD 1835 GDIP1-T8

P (R–PDIP–T8) PLASTIC DUAL–IN–LINE PACKAGE

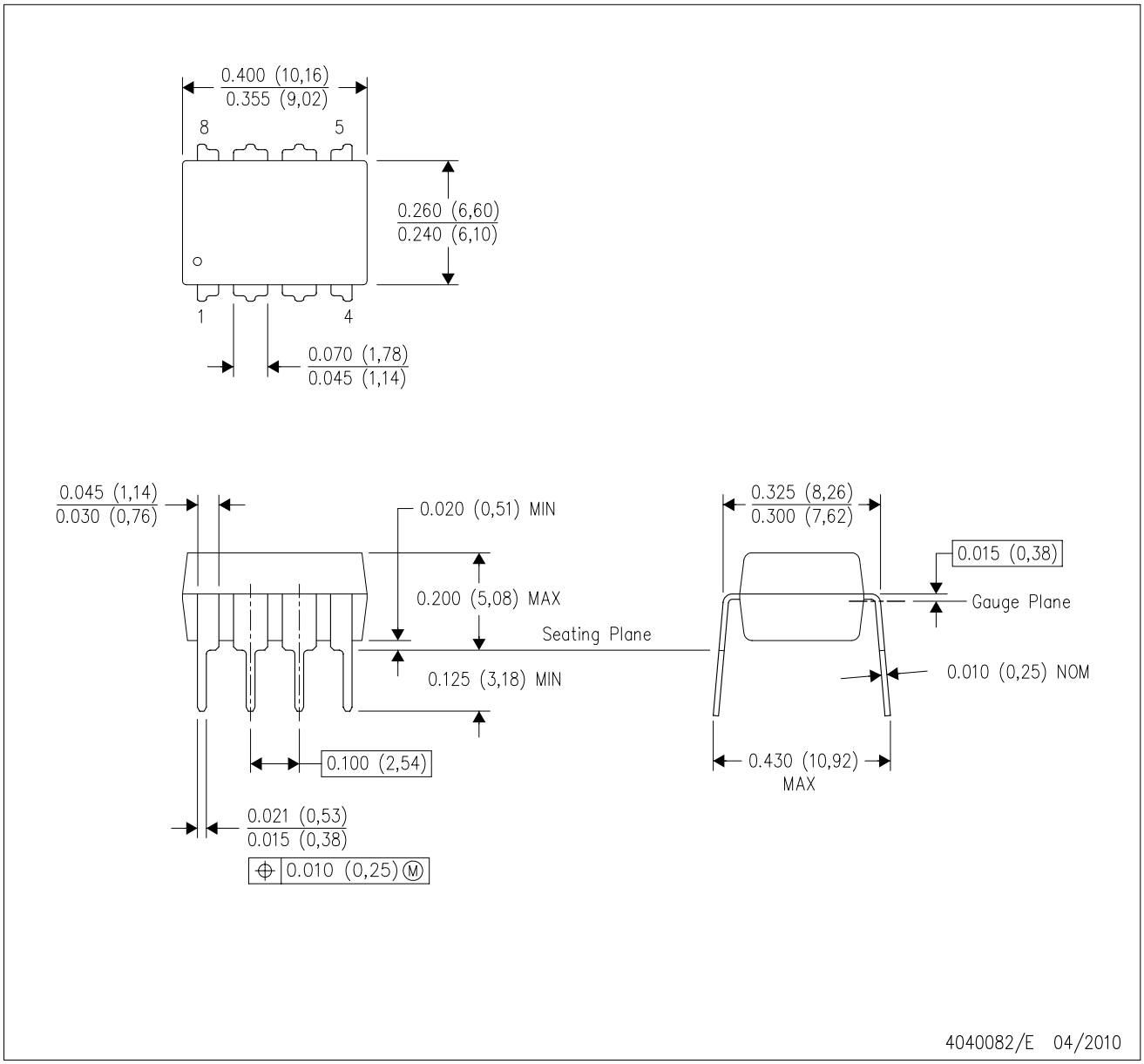

NOTES:
A. All linear dimensions are in inches (millimeters).
B. This drawing is subject to change without notice.
C. Falls within JEDEC MS–001 variation BA.

IMPORTANT NOTICE AND DISCLAIMER

TI PROVIDES TECHNICAL AND RELIABILITY DATA (INCLUDING DATA SHEETS), DESIGN RESOURCES (INCLUDING REFERENCE DESIGNS), APPLICATION OR OTHER DESIGN ADVICE, WEB TOOLS, SAFETY INFORMATION, AND OTHER RESOURCES “AS IS” AND WITH ALL FAULTS, AND DISCLAIMS ALL WARRANTIES, EXPRESS AND IMPLIED, INCLUDING WITHOUT LIMITATION ANY IMPLIED WARRANTIES OF MERCHANTABILITY, FITNESS FOR A PARTICULAR PURPOSE OR NON-INFRINGEMENT OF THIRD PARTY INTELLECTUAL PROPERTY RIGHTS.

These resources are intended for skilled developers designing with TI products. You are solely responsible for (1) selecting the appropriate TI products for your application, (2) designing, validating and testing your application, and (3) ensuring your application meets applicable standards, and any other safety, security, regulatory or other requirements.

These resources are subject to change without notice. TI grants you permission to use these resources only for development of an application that uses the TI products described in the resource. Other reproduction and display of these resources is prohibited. No license is granted to any other TI intellectual property right or to any third party intellectual property right. TI disclaims responsibility for, and you will fully indemnify TI and its representatives against, any claims, damages, costs, losses, and liabilities arising out of your use of these resources.

TI’s products are provided subject to TI’s Terms of Sale or other applicable terms available either on ti.com or provided in conjunction with such TI products. TI’s provision of these resources does not expand or otherwise alter TI’s applicable warranties or warranty disclaimers for TI products.

TI objects to and rejects any additional or different terms you may have proposed.

Mailing Address: Texas Instruments, Post Office Box 655303, Dallas, Texas 75265
Copyright © 2022, Texas Instruments Incorporated