MSP430F673xA、MSP430F672xA 混合信号微控制器

1 器件概述

1.1 特性

- 低电源电压范围：
  3.6V 到低至 1.8V
- 超低功耗
  - 激活模式 (AM)：
    所有系统时钟激活
    在 8MHz、3.0V 且闪存程序执行时为
    265µA/MHz（典型值）
    在 8MHz、3.0V 且 RAM 程序执行时为
    140µA/MHz（典型值）
  - 待机模式 (LPM3)：
    含晶体的实时时钟 (RTC)、看门狗、电源监视器
    可用、完全 RAM 保持、快速唤醒：
    2.2V 时为 1.7µA，3.0V 时为 2.5µA（典型值）
  - 关闭模式 (LPM4)：
    完全 RAM 保持、电源监视器可用、快速唤醒：
    3.0V 时为 1.6µA（典型值）
  - 关断 RTC 模式 (LPM3.5)：
    关断模式，RTC（采用晶振）工作：
    3.0V 时为 1.24µA（典型值）
  - 关断模式 (LPM4.5)：
    3.0V 时为 0.78µA（典型值）
- 在 3µs（典型值）内从待机模式唤醒
- 16 位精简指令集计算机 (RISC) 架构，扩展内存，高达 25MHz 的系统时钟
- 灵活的电源管理系统
  - 内置可编程的低压降稳压器 (LDO)
  - 电源电压监视、监控、和临时限电
  - 由多达 2 个辅助电源供电的系统运行
- 单一时钟系统
  - 针对频率稳定的锁相环 (FLL) 控制环路
  - 低功耗低频内部时钟源 (VLO)
  - 低频修整内部基准源 (REFO)
  - 32kHz 晶体 (XT1)
- 一个具有 3 个捕捉/比较寄存器的 16 位定时器
- 3 个 16 位定时器，每个定时器具有 2 个捕捉/比较寄存器
- 增强型通用串行通信接口 (eUSCI)
  - eUSCI_A0、eUSCI_A1 和 eUSCI_A2
    - 增强型通用异步收发器 (UART) 支持自动波特率检测
    - IrDA 编码和解码
    - 同步串行外设接口 (SPI)
  - eUSCI_B0
    - 支持多个从器件寻址的 I^2C
    - 同步串行外设接口 (SPI)
- 具有晶振偏移校准和温度补偿功能的受密码保护的 RTC
- 用于备用子系统的独立电压电源
  - 32kHz 低频振荡器 (XT1)
  - 实时时钟
  - 备用存储器（4 × 16 位）
- 三个具有差分可编程增益放大器 (PGA) 输入的 24 位 Σ-Δ 模数转换器 (ADC)
- 具有 8 路复用模式下高达 320 段对比度控制 的集成 LCD 驱动器
- 硬件乘法器支持 32 位运算
- 10位 200ksps ADC
  - 内部基准
  - 采样和保持、自动扫描特性
  - 多达 6 个外部通道和 2 个内部通道，包括温度传感器
- 3 通道内部直接内存访问 (DMA)
- 串行板上编程，无需外部编程电压
- 器件比较 汇总了可用的产品系列成员
- 采用 100 引脚和 80 引脚 LQFP 封装
- 单相电子电表开发工具（另请参阅 工具与软件）
  - EVM430-F6736 - 用于计量的 MSP430F6736 EVM
  - 适用于 MSP430™ MCU 的能量测量设计中心

本文档旨在为方便起见，提供有关 TI 产品中文版本的信息，以确认产品的概要。 有关适用的官方英文版本的最新信息，请访问 www.ti.com，其内容始终优先。 TI 不保证翻译的准确性和有效性。 在实际设计之前，请务必参考最新版本的英文版本。

1.2 应用

- 单相电子式电度表
- 能量监控
- 公用事业仪表计量

1.3 说明

TI MSP 系列超低功耗微控制器种类繁多，各成员器件配备不同的外设集以满足各类应用的 需求。此架构与多种低功耗模式配合使用，是延长便携式测量应用电池寿命的最优 选择。该器件 具有 一个强大的 16 位精简指令集 (RISC) CPU，使用 16 位寄存器以及常数发生器，以便获得最高编码效率。DCO 可使器件在不到 3µs（典型值）的时间内从低功耗模式唤醒至激活模式。

MSP430F673xA 和 MSP430F672xA 微控制器具有高性能 24 位 Σ-Δ ADC（MSP430F673xA 中有 3 个 ADC，MSP430F672xA 中有 2 个 ADC）、1 个 10 位 ADC、4 个 eUSCI（3 个 eUSCI_A 模块和 1 个 eUSCI_B 模块）、4 个 16 位计时器、1 个硬件乘法器、1 个 DMA 模块、1 个具有报警功能的 RTC 模块、1 个具有集成对比度控制功能的 LCD 驱动器以及 1 个辅助电源系统；100 引脚器件的 I/O 引脚多达 72 个，而 80 引脚器件的 I/O 引脚多达 52 个。

要获得完整的模块说明，请参阅*《MSP430F5xx 和 MSP430F6xx 系列用户指南》*

器件信息(1)

器件型号	封装	封装尺寸(2)
MSP430F6736AIPZ	LQFP (100)	14mm x 14mm
MSP430F6736AIPN	LQFP (80)	12mm x 12mm

(1) 要获得最新的产品、封装和订购信息，请参见*封装选项附录*（节 9），或者访问德州仪器 (TI) 网站 www.ti.com.cn。
(2) 这里显示的尺寸为近似值。要获得包含误差值的封装尺寸，请参见*机械数据*（节 9）。

版权 © 2015–2018, Texas Instruments Incorporated

1.4 功能框图

图 1-1 给出了所有采用 PZ 封装的器件型号的功能框图。

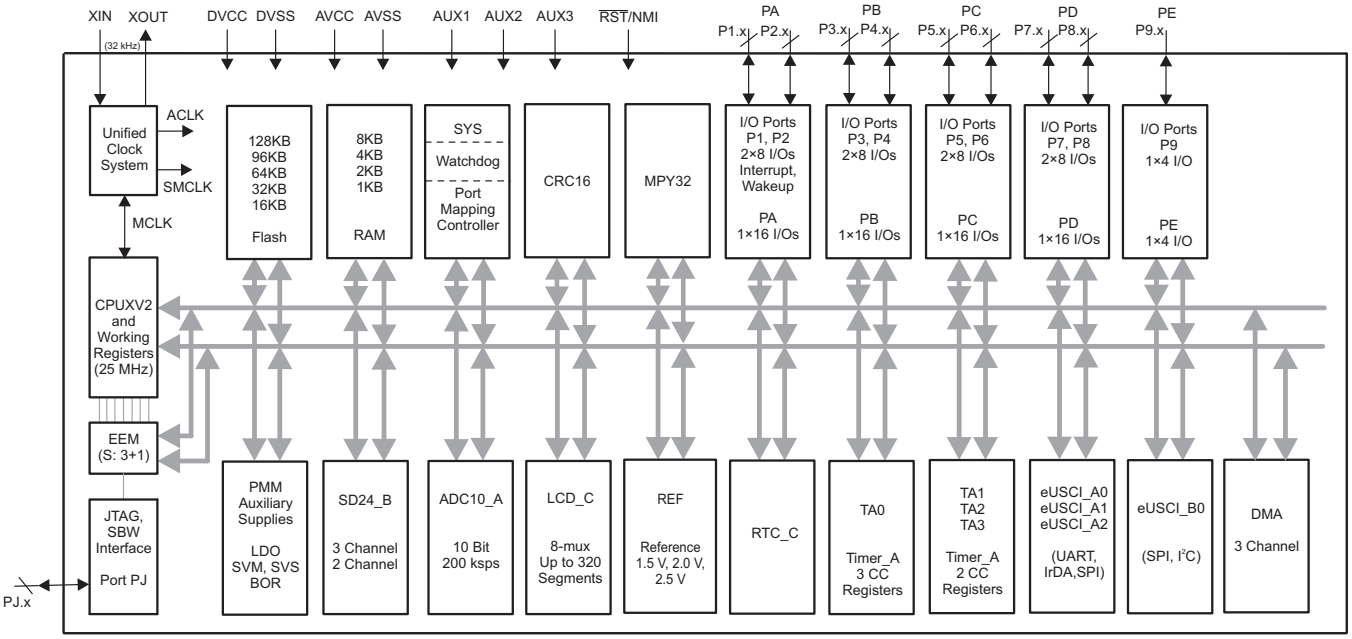

Copyright © 2016, Texas Instruments Incorporated

图 1-1. 功能框图 - MSP430F673xAIPZ 和 MSP430F672xAIPZ

图 1-2 给出了所有采用 PN 封装的器件型号的功能框图。

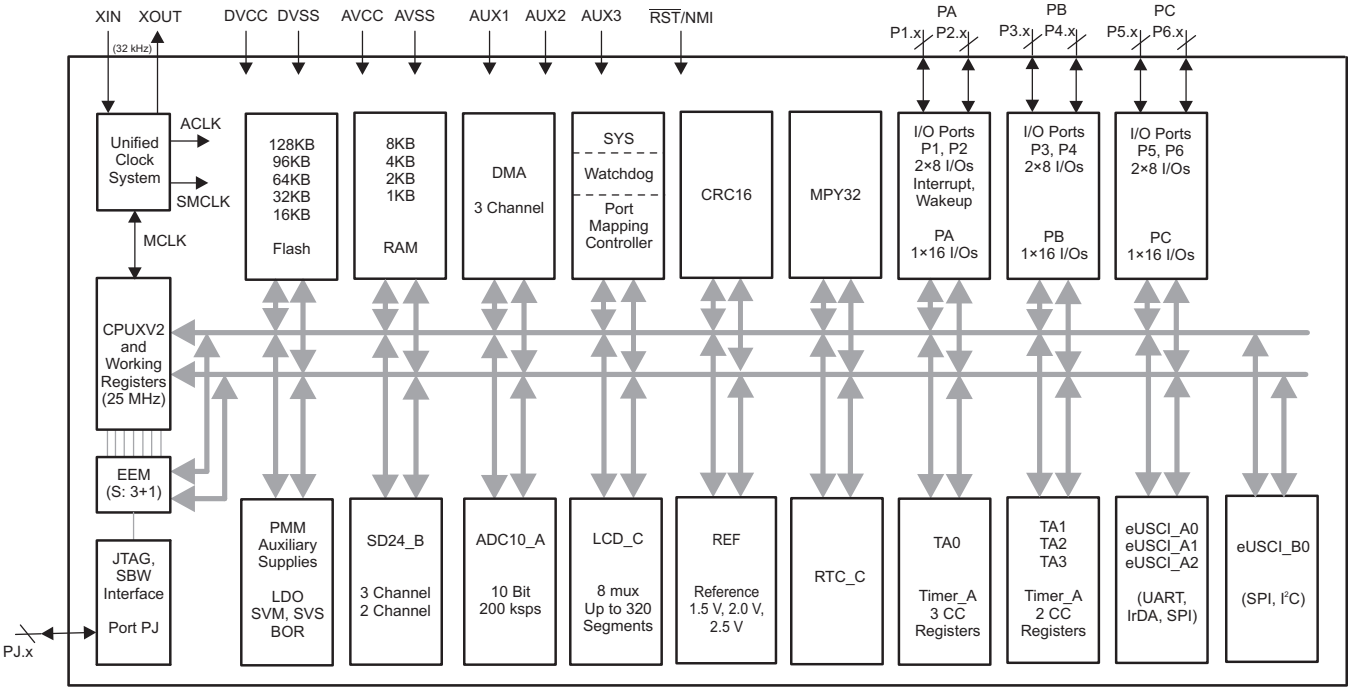

Copyright © 2016, Texas Instruments Incorporated

图 1-2. 功能框图 - MSP430F673xAIPN 和 MSP430F672xAIPN

内容

1 器件概述 1
- 1.1 特性 1
- 1.2 应用 2
- 1.3 说明 2
- 1.4 功能框图 3

2 修订历史记录 5

3 Device Comparison 6
- 3.1 Related Products 7

4 Terminal Configuration and Functions 8
- 4.1 Pin Diagrams 8
- 4.2 Pin Attributes 12
- 4.3 Signal Descriptions 22
- 4.4 Pin Multiplexing 33
- 4.5 Buffer Type 33
- 4.6 Connection of Unused Pins 33

5 Specifications 34
- 5.1 Absolute Maximum Ratings 34
- 5.2 ESD Ratings 34
- 5.3 Recommended Operating Conditions 34
- 5.4 Active Mode Supply Current Into V_{CC} Excluding External Current 36
- 5.5 Low-Power Mode Supply Currents (Into V_{CC}) Excluding External Current 37
- 5.6 Low-Power Mode With LCD Supply Currents (Into V_{CC}) Excluding External Current 38
- 5.7 Thermal Resistance Characteristics 39
- 5.8 Timing and Switching Characteristics 40

6 Detailed Description 75
- 6.1 Overview 75
- 6.2 CPU 75
- 6.3 Instruction Set 76
- 6.4 Operating Modes 77
- 6.5 Interrupt Vector Addresses 78
- 6.6 Bootloader (BSL) 79
- 6.7 JTAG Operation 79
- 6.8 Flash Memory 80
- 6.9 RAM 80
- 6.10 Backup RAM 80
- 6.11 Peripherals 81
- 6.12 Input/Output Diagrams 91
- 6.13 Device Descriptors (TLV) 123
- 6.14 Memory 125
- 6.15 Identification 140

7 Applications, Implementation, and Layout 141

8 器件和文档支持 142
- 8.1 入门和后续步骤 142
- 8.2 Device Nomenclature 142
- 8.3 工具与软件 144
- 8.4 文档支持 146
- 8.5 相关链接 148
- 8.6 社区资源 148
- 8.7 商标 148
- 8.8 静电放电警告 149
- 8.9 Export Control Notice 149
- 8.10 Glossary 149

9 机械、封装和可订购信息 149

版权 © 2015–2018, Texas Instruments Incorporated

2 修订历史记录

Changes from February 25, 2015 to October 3, 2018 **Page**

- 在以下位置添加了指向开发工具和设计中心的链接：*特性* 1
- Added Section 3.1, *Related Products* 7
- Added Section 4.5, *Buffer Type* 33
- Added typical conditions statements at the beginning of Section 5, *Specifications* 34
- Added SD24_B input pins and AUXVCCx pins to exception list on "Voltage applied to pins" parameter, and added SD24_B input pin limits in "Diode current at pins" parameter in Section 5.1, *Absolute Maximum Ratings* 34
- Added Section 5.7, *Thermal Resistance Characteristics* 39
- Corrected nonvolatile memory type (changed "FRAM" to "flash") in 节 5.8.1, *Power Supply Sequencing* 40
- Updated notes (1) and (2) and added note (3) in Table 5-1, *Wake-up Times From Low-Power Modes and Reset* .. 40
- Changed the MIN value of the $V_{(DVCC_BOR_hys)}$ parameter from 60 mV to 50 mV in Table 5-12, *PMM, Brownout Reset (BOR)* 50
- Replaced f_{Frame} parameter with f_{LCD}, $f_{FRAME,4mux}$, and $f_{FRAME,8mux}$ parameters in Table 5-33, *LCD_C Operating Conditions* 62
- Removed ADC10DIV from the formula for the TYP value in the second row for $t_{CONVERT}$ in Table 5-44, *10-Bit ADC, Timing Parameters*, because $f_{ADC10CLK}$ is after division 71
- Updated Test Conditions for all parameters in Table 5-45, *10-Bit ADC, Linearity Parameters*: changed from "$(V_{eREF+} – V_{eREF–})$min ≤ $(V_{eREF+} – V_{eREF–})$" to "1.4 V ≤ $(V_{eREF+} – V_{eREF–})$" in all cases 72
- Added "C_{VeREF+} = 20 pF" to E_I Test Conditions 72
- Changed all instances of "bootloader" to "bootloader" 79
- Corrected spelling of NMIIFG in 表 6-9, *System Module Interrupt Vector Registers* 85
- Corrected port number in title of 表 6-21, *Port P2 (P2.0 and P2.1) Pin Functions (MSP430F67xxAIPZ Only)* 96
- 将先前的*开发工具支持*部分替换为节 8.3*工具与软件* 144
- 更改了格式并在节 8.4*文档支持* 中添加了内容 146

3 Device Comparison

Table 3-1 summarizes the available family members.

Table 3-1. Device Comparison(1) (2)

DEVICE	FLASH (KB)	SRAM (KB)	SD24_B CONVERTERS	ADC10_A CHANNELS	Timer_A(3)	eUSCI_A: UART, IrDA, SPI	eUSCI_B: SPI, i^2C	I/Os	PACKAGE
MSP430F6736AIPZ	128	8	3	6 ext, 2 int	3, 2, 2, 2	3	1	72	100 PZ
MSP430F6735AIPZ	128	4	3	6 ext, 2 int	3, 2, 2, 2	3	1	72	100 PZ
MSP430F6734AIPZ	96	4	3	6 ext, 2 int	3, 2, 2, 2	3	1	72	100 PZ
MSP430F6733AIPZ	64	4	3	6 ext, 2 int	3, 2, 2, 2	3	1	72	100 PZ
MSP430F6731AIPZ	32	2	3	6 ext, 2 int	3, 2, 2, 2	3	1	72	100 PZ
MSP430F6730AIPZ	16	1	3	6 ext, 2 int	3, 2, 2, 2	3	1	72	100 PZ
MSP430F6726AIPZ	128	8	2	6 ext, 2 int	3, 2, 2, 2	3	1	72	100 PZ
MSP430F6725AIPZ	128	4	2	6 ext, 2 int	3, 2, 2, 2	3	1	72	100 PZ
MSP430F6724AIPZ	96	4	2	6 ext, 2 int	3, 2, 2, 2	3	1	72	100 PZ
MSP430F6723AIPZ	64	4	2	6 ext, 2 int	3, 2, 2, 2	3	1	72	100 PZ
MSP430F6721AIPZ	32	2	2	6 ext, 2 int	3, 2, 2, 2	3	1	72	100 PZ
MSP430F6720AIPZ	16	1	2	6 ext, 2 int	3, 2, 2, 2	3	1	72	100 PZ
MSP430F6736AIPN	128	8	3	3 ext, 2 int	3, 2, 2, 2	3	1	52	80 PN
MSP430F6735AIPN	128	4	3	3 ext, 2 int	3, 2, 2, 2	3	1	52	80 PN
MSP430F6734AIPN	96	4	3	3 ext, 2 int	3, 2, 2, 2	3	1	52	80 PN
MSP430F6733AIPN	64	4	3	3 ext, 2 int	3, 2, 2, 2	3	1	52	80 PN
MSP430F6731AIPN	32	2	3	3 ext, 2 int	3, 2, 2, 2	3	1	52	80 PN
MSP430F6730AIPN	16	1	3	3 ext, 2 int	3, 2, 2, 2	3	1	52	80 PN
MSP430F6726AIPN	128	8	2	3 ext, 2 int	3, 2, 2, 2	3	1	52	80 PN
MSP430F6725AIPN	128	4	2	3 ext, 2 int	3, 2, 2, 2	3	1	52	80 PN
MSP430F6724AIPN	96	4	2	3 ext, 2 int	3, 2, 2, 2	3	1	52	80 PN
MSP430F6723AIPN	64	4	2	3 ext, 2 int	3, 2, 2, 2	3	1	52	80 PN
MSP430F6721AIPN	32	2	2	3 ext, 2 int	3, 2, 2, 2	3	1	52	80 PN
MSP430F6720AIPN	16	1	2	3 ext, 2 int	3, 2, 2, 2	3	1	52	80 PN

(1) For the most current package and ordering information, see the *Package Option Addendum* in 节 9, or see the TI website at www.ti.com.
(2) Package drawings, thermal data, and symbolization are available at www.ti.com/packaging.
(3) Each number in the sequence represents an instantiation of Timer_A with its associated number of capture compare registers and PWM output generators available. For example, a number sequence of 3, 5 would represent two instantiations of Timer_A, the first instantiation having 3 and the second instantiation having 5 capture compare registers and PWM output generators, respectively.

Copyright © 2015–2018, Texas Instruments Incorporated

3.1 Related Products

For information about other devices in this family of products or related products, see the following links.

Products for TI Microcontrollers TI's low-power and high-performance MCUs, with wired and wireless connectivity options, are optimized for a broad range of applications.

Products for MSP430 Ultra-Low-Power Microcontrollers One platform. One ecosystem. Endless possibilities. Enabling the connected world with innovations in ultra-low-power microcontrollers with advanced peripherals for precise sensing and measurement.

Companion Products for MSP430F6736A Review products that are frequently purchased or used with this product.

Reference Designs for MSP430F6736A The TI Designs Reference Design Library is a robust reference design library that spans analog, embedded processor, and connectivity. Created by TI experts to help you jump start your system design, all TI Designs include schematic or block diagrams, BOMs, and design files to speed your time to market.

4 Terminal Configuration and Functions

4.1 Pin Diagrams

Figure 4-1 shows the pinout for the 100-pin PZ package. See Table 4-1 for differences between the MSP430F673xA and MSP430F672xA devices in this package.

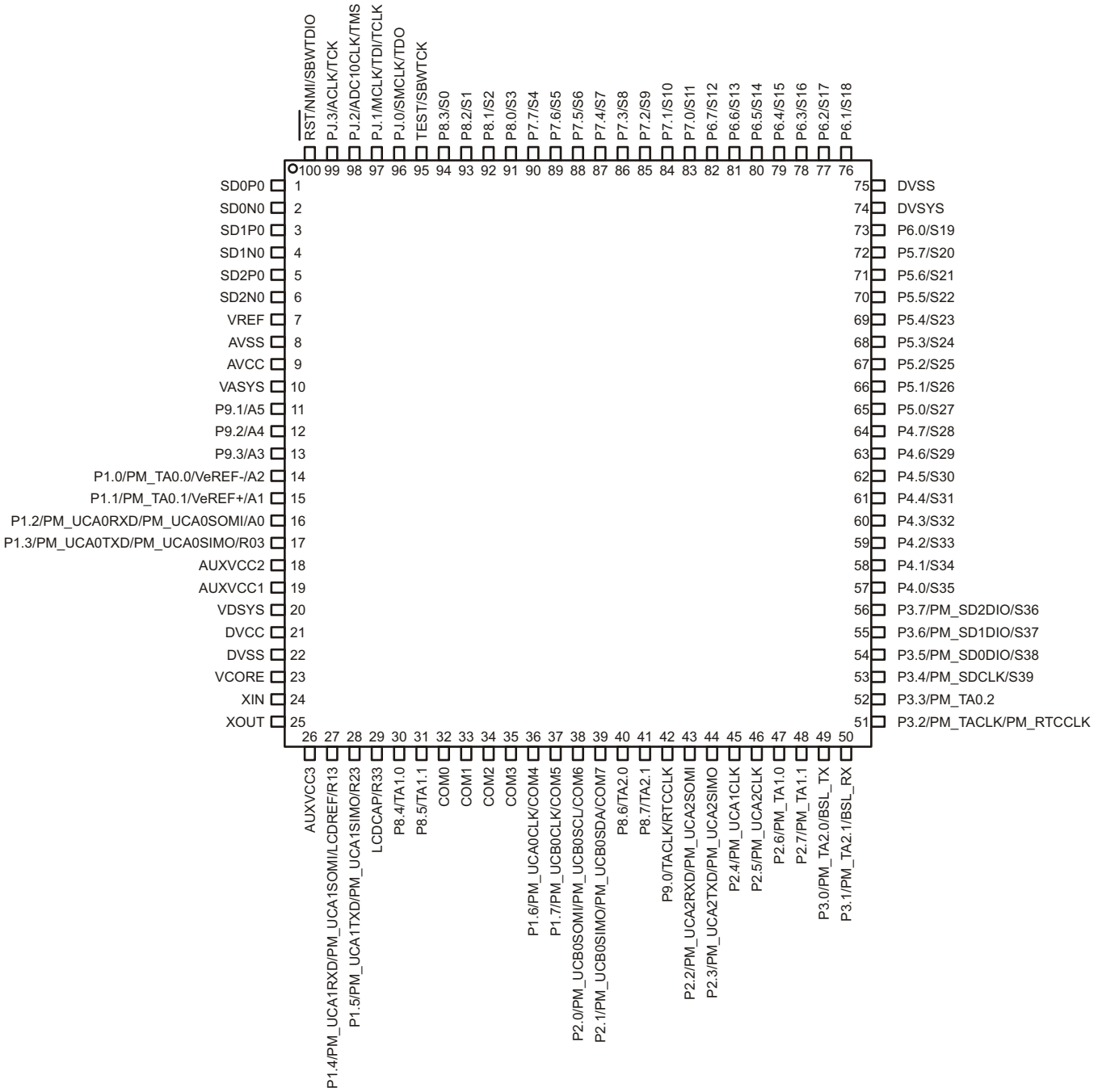

NOTE: The secondary digital functions on Ports P1, P2, and P3 are fully mappable. This pinout shows the default mapping. See 节 6.11.6 for details.

NOTE: The pins VDSYS and DVSYS must be connected externally on board for proper device operation.

CAUTION: The LCDCAP/R33 pin must be connected to DVSS if not used.

Figure 4-1. 100-Pin PZ Package (Top View)

Copyright © 2015–2018, Texas Instruments Incorporated

Table 4-1. Pinout Differences Between MSP430F673xAIPZ and MSP430F672xAIPZ(1)

PIN NUMBER	PIN NAME	
	MSP430F673xAIPZ	MSP430F672xAIPZ
1	SD0P0	SD0P0
2	SD0N0	SD0N0
3	SD1P0	SD1P0
4	SD1N0	SD1N0
5	*SD2P0*	*NC*
6	*SD2N0*	*NC*
7	VREF	VREF
53	P3.4/PM_SDCLK/S39	P3.4/PM_SDCLK/S39
54	P3.5/PM_SD0DIO/S38	P3.5/PM_SD0DIO/S38
55	P3.6/PM_SD1DIO/S37	P3.6/PM_SD1DIO/S37
56	P3.7/*PM_SD2DIO*/S36	P3.7/*PM_NONE*/S36

(1) Signal names that differ between devices are indicated by *italic* typeface.

Figure 4-2 shows the pinout for the 80-pin PN package. See Table 4-2 for differences between the MSP430F673xA and MSP430F672xA devices in this package.

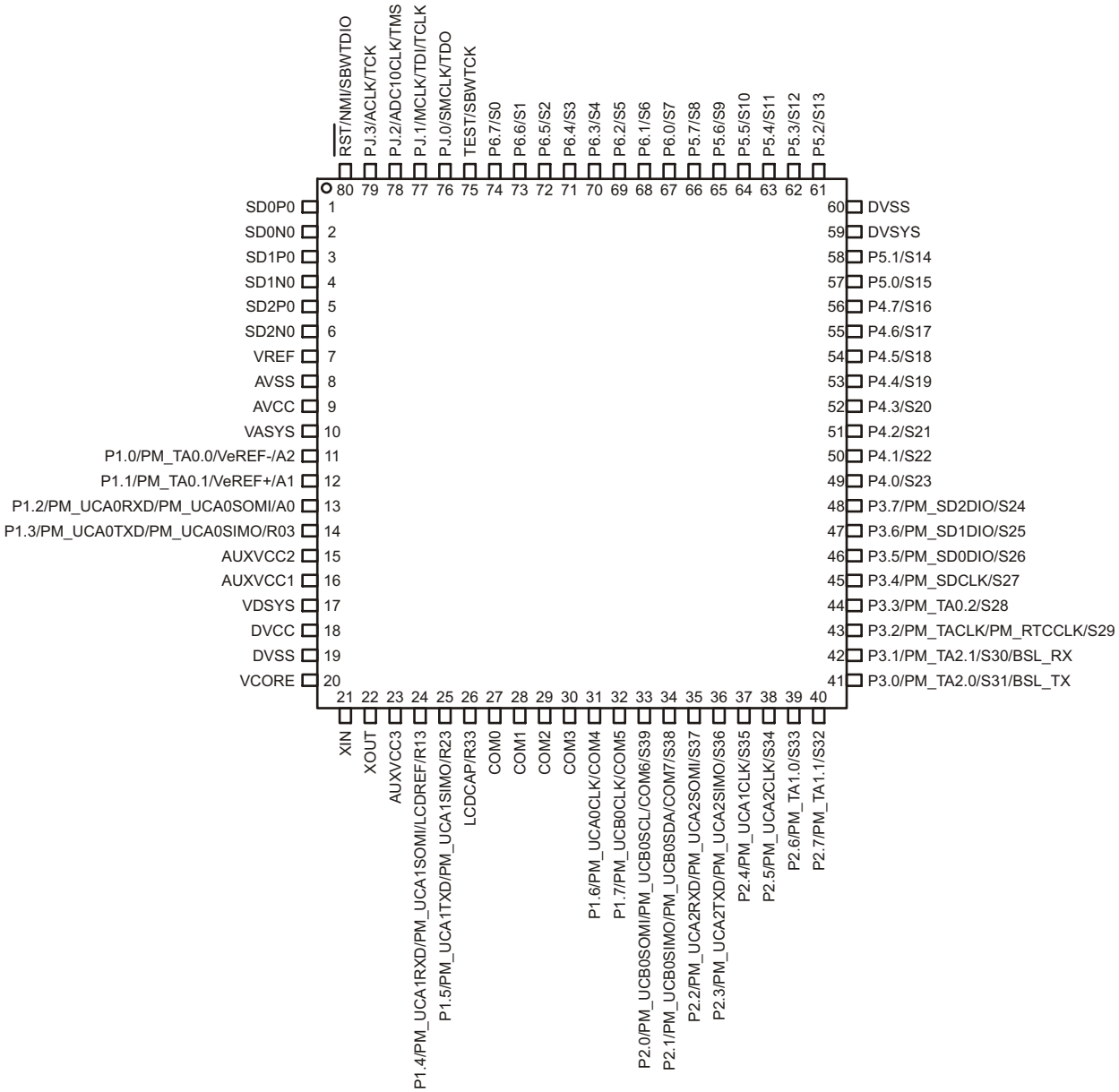

NOTE: The secondary digital functions on Ports P1, P2, and P3 are fully mappable. This pinout shows the default mapping. See 节 6.11.6 for details.

NOTE: The pins VDSYS and DVSYS must be connected externally on board for proper device operation.

CAUTION: The LCDCAP/R33 pin must be connected to DVSS if not used.

Figure 4-2. 80-Pin PN Package (Top View)

Copyright © 2015–2018, Texas Instruments Incorporated

Table 4-2. Pinout Differences Between MSP430F673xAIPN and MSP430F672xAIPN(1)

PIN NUMBER	PIN NAME	
	MSP430F673xAIPN	MSP430F672xAIPN
1	SD0P0	SD0P0
2	SD0N0	SD0N0
3	SD1P0	SD1P0
4	SD1N0	SD1N0
5	*SD2P0*	*NC*
6	*SD2N0*	*NC*
7	VREF	VREF
45	P3.4/PM_SDCLK/S27	P3.4/PM_SDCLK/S27
46	P3.5/PM_SD0DIO/S26	P3.5/PM_SD0DIO/S26
47	P3.6/PM_SD1DIO/S25	P3.6/PM_SD1DIO/S25
48	P3.7/*PM_SD2DIO*/S24	P3.7/*PM_NONE*/S24

(1) Signal names that differ between devices are indicated by *italic* typeface.

4.2 Pin Attributes

Table 4-3 lists the pin attributes for all device variants in the PZ package. For the PN package, see Table 4-4.

Table 4-3. Pin Attributes, PZ Package

PIN NO.	SIGNAL NAME (1) (2)	SIGNAL TYPE (3)	BUFFER TYPE (4)	POWER SOURCE	RESET STATE AFTER BOR (5)
1	SD0P0	I	Analog	AVCC	OFF
2	SD0N0	I	Analog	AVCC	OFF
3	SD1P0	I	Analog	AVCC	OFF
4	SD1N0	I	Analog	AVCC	OFF
5	SD2P0	I	Analog	AVCC	OFF
6	SD2N0	I	Analog	AVCC	OFF
7	VREF	I	Analog	–	OFF
8	AVSS	P	Power	–	N/A
9	AVCC	P	Power	–	N/A
10	VASYS	P	Power	–	N/A
11	P9.1	I/O	LVCMOS	DVCC	OFF
	A5	I	Analog	AVCC	–
12	P9.2	I/O	LVCMOS	DVCC	OFF
	A4	I	Analog	AVCC	–
13	P9.3	I/O	LVCMOS	DVCC	OFF
	A3	I	Analog	AVCC	–
14	P1.0	I/O	LVCMOS	DVCC	OFF
	PM_TA0.0	I/O	LVCMOS	DVCC	–
	VeREF-	I	Power	–	N/A
	A2	I	Analog	AVCC	–
15	P1.1	I/O	LVCMOS	DVCC	OFF
	PM_TA0.1	I/O	LVCMOS	DVCC	–
	VeREF+	I	Power	–	N/A
	A1	I	Analog	AVCC	–
16	P1.2	I/O	LVCMOS	DVCC	OFF
	PM_UCA0RXD	I	LVCMOS	DVCC	–
	PM_UCA0SOMI	I/O	LVCMOS	DVCC	–
	A0	I	Analog	AVCC	–
17	P1.3	I/O	LVCMOS	DVCC	OFF
	PM_UCA0TXD	O	LVCMOS	DVCC	–
	PM_UCA0SIMO	I/O	LVCMOS	DVCC	–
	R03	I/O	Analog	AVCC	–
18	AUXVCC2	P	Power	–	N/A
19	AUXVCC1	P	Power	–	N/A
20	VDSYS	P	Power	–	N/A
21	DVCC	P	Power	–	N/A
22	DVSS	P	Power	–	N/A

(1) For each multiplexed pin, the signal that is listed first in this table is the default after reset.
(2) To determine the pin mux encodings for each pin, refer to 节 6.12, *Input/Output Diagrams*.
(3) Signal Types: I = Input, O = Output, I/O = Input or Output.
(4) Buffer Types: LVCMOS, Analog, or Power (see Table 4-7, *Buffer Type*)
(5) Reset States:
OFF = High-impedance input with pullup or pulldown disabled (if available)
N/A = Not applicable

Copyright © 2015–2018, Texas Instruments Incorporated

Table 4-3. Pin Attributes, PZ Package (continued)

PIN NO.	SIGNAL NAME (1) (2)	SIGNAL TYPE (3)	BUFFER TYPE (4)	POWER SOURCE	RESET STATE AFTER BOR (5)
23	VCORE	P	Power	–	N/A
24	XIN	I	LVCMOS	DVCC	OFF
25	XOUT	O	LVCMOS	DVCC	OFF
26	AUXVCC3	P	Power	–	N/A
27	P1.4	I/O	LVCMOS	DVCC	OFF
	PM_UCA1RXD	I	LVCMOS	DVCC	–
	PM_UCA1SOMI	I/O	LVCMOS	DVCC	–
	LCDREF	I	Analog	AVCC	–
	R13	I/O	Analog	AVCC	–
28	P1.5	I/O	LVCMOS	DVCC	OFF
	PM_UCA1TXD	O	LVCMOS	DVCC	–
	PM_UCA1SIMO	I/O	LVCMOS	DVCC	–
	R23	I/O	Analog	AVCC	–
29	LCDCAP	I/O	Analog	AVCC	OFF
	R33	I/O	Analog	AVCC	–
30	P8.4	I/O	LVCMOS	DVCC	OFF
	TA1.0	I/O	LVCMOS	DVCC	–
31	P8.5	I/O	LVCMOS	DVCC	OFF
	TA1.1	I/O	LVCMOS	DVCC	–
32	COM0	O	LVCMOS	DVCC	OFF
33	COM1	O	LVCMOS	DVCC	OFF
34	COM2	O	LVCMOS	DVCC	OFF
35	COM3	O	LVCMOS	DVCC	OFF
36	P1.6	I/O	LVCMOS	DVCC	OFF
	PM_UCA0CLK	I/O	LVCMOS	DVCC	–
	COM4	O	LVCMOS	DVCC	–
37	P1.7	I/O	LVCMOS	DVCC	OFF
	PM_UCB0CLK	I/O	LVCMOS	DVCC	–
	COM5	O	LVCMOS	DVCC	–
38	P2.0	I/O	LVCMOS	DVCC	OFF
	PM_UCB0SOMI	I/O	LVCMOS	DVCC	–
	PM_UCB0SCL	I/O	LVCMOS	DVCC	–
	COM6	O	LVCMOS	DVCC	–
39	P2.1	I/O	LVCMOS	DVCC	OFF
	PM_UCB0SIMO	I/O	LVCMOS	DVCC	–
	PM_UCB0SDA	I/O	LVCMOS	DVCC	–
	COM7	O	LVCMOS	DVCC	–
40	P8.6	I/O	LVCMOS	DVCC	OFF
	TA2.0	I/O	LVCMOS	DVCC	–
41	P8.7	I/O	LVCMOS	DVCC	OFF
	TA2.1	I/O	LVCMOS	DVCC	–
42	P9.0	I/O	LVCMOS	DVCC	OFF
	TACLK	I	LVCMOS	DVCC	–
	RTCCLK	O	LVCMOS	DVCC	–
43	P2.2	I/O	LVCMOS	DVCC	OFF
	PM_UCA2RXD	I	LVCMOS	DVCC	–
	PM_UCA2SOMI	I/O	LVCMOS	DVCC	–

Copyright © 2015–2018, Texas Instruments Incorporated

Table 4-3. Pin Attributes, PZ Package (continued)

PIN NO.	SIGNAL NAME (1) (2)	SIGNAL TYPE (3)	BUFFER TYPE (4)	POWER SOURCE	RESET STATE AFTER BOR (5)
44	P2.3	I/O	LVCMOS	DVCC	OFF
	PM_UCA2TXD	O	LVCMOS	DVCC	–
	PM_UCA2SIMO	I/O	LVCMOS	DVCC	–
45	P2.4	I/O	LVCMOS	DVCC	OFF
	PM_UCA1CLK	I/O	LVCMOS	DVCC	–
46	P2.5	I/O	LVCMOS	DVCC	OFF
	PM_UCA2CLK	I/O	LVCMOS	DVCC	–
47	P2.6	I/O	LVCMOS	DVCC	OFF
	PM_TA1.0	I/O	LVCMOS	DVCC	–
48	P2.7	I/O	LVCMOS	DVCC	OFF
	PM_TA1.1	I/O	LVCMOS	DVCC	–
49	P3.0	I/O	LVCMOS	DVCC	OFF
	PM_TA2.0	I/O	LVCMOS	DVCC	–
	BSL_TX	O	LVCMOS	DVCC	–
50	P3.1	I/O	LVCMOS	DVCC	OFF
	PM_TA2.1	I/O	LVCMOS	DVCC	–
	BSL_RX	I	LVCMOS	DVCC	–
51	P3.2	I/O	LVCMOS	DVCC	OFF
	PM_TACLK	I	LVCMOS	DVCC	–
	PM_RTCCLK	O	LVCMOS	DVCC	–
52	P3.3	I/O	LVCMOS	DVCC	OFF
	PM_TA0.2	I/O	LVCMOS	DVCC	–
53	P3.4	I/O	LVCMOS	DVCC	OFF
	PM_SDCLK	I/O	LVCMOS	DVCC	–
	S39	O	LVCMOS	DVCC	–
54	P3.5	I/O	LVCMOS	DVCC	OFF
	PM_SD0DIO	I/O	Analog	AVCC	–
	S38	O	LVCMOS	DVCC	–
55	P3.6	I/O	LVCMOS	DVCC	OFF
	PM_SD1DIO	I/O	Analog	AVCC	–
	S37	O	LVCMOS	DVCC	–
56	P3.7	I/O	LVCMOS	DVCC	OFF
	PM_SD2DIO	I/O	LVCMOS	DVCC	–
	S36	O	LVCMOS	DVCC	–
57	P4.0	I/O	LVCMOS	DVCC	OFF
	S35	O	LVCMOS	DVCC	–
58	P4.1	I/O	LVCMOS	DVCC	OFF
	S34	O	LVCMOS	DVCC	–
59	P4.2	I/O	LVCMOS	DVCC	OFF
	S33	O	LVCMOS	DVCC	–
60	P4.3	I/O	LVCMOS	DVCC	OFF
	S32	O	LVCMOS	DVCC	–
61	P4.4	I/O	LVCMOS	DVCC	OFF
	S31	O	LVCMOS	DVCC	–
62	P4.5	I/O	LVCMOS	DVCC	OFF
	S30	O	LVCMOS	DVCC	–

Copyright © 2015–2018, Texas Instruments Incorporated

Table 4-3. Pin Attributes, PZ Package (continued)

PIN NO.	SIGNAL NAME (1) (2)	SIGNAL TYPE (3)	BUFFER TYPE (4)	POWER SOURCE	RESET STATE AFTER BOR (5)
63	P4.6	I/O	LVCMOS	DVCC	OFF
	S29	O	LVCMOS	DVCC	–
64	P4.7	I/O	LVCMOS	DVCC	OFF
	S28	O	LVCMOS	DVCC	–
65	P5.0	I/O	LVCMOS	DVCC	OFF
	S27	O	LVCMOS	DVCC	–
66	P5.1	I/O	LVCMOS	DVCC	OFF
	S26	O	LVCMOS	DVCC	–
67	P5.2	I/O	LVCMOS	DVCC	OFF
	S25	O	LVCMOS	DVCC	–
68	P5.3	I/O	LVCMOS	DVCC	OFF
	S24	O	LVCMOS	DVCC	–
69	P5.4	I/O	LVCMOS	DVCC	OFF
	S23	O	LVCMOS	DVCC	–
70	P5.5	I/O	LVCMOS	DVCC	OFF
	S22	O	LVCMOS	DVCC	–
71	P5.6	I/O	LVCMOS	DVCC	OFF
	S21	O	LVCMOS	DVCC	–
72	P5.7	I/O	LVCMOS	DVCC	OFF
	S20	O	LVCMOS	DVCC	–
73	P6.0	I/O	LVCMOS	DVCC	OFF
	S19	O	LVCMOS	DVCC	–
74	DVSYS	P	Power	–	N/A
75	DVSS	P	Power	–	N/A
76	P6.1	I/O	LVCMOS	DVCC	OFF
	S18	O	LVCMOS	DVCC	–
77	P6.2	I/O	LVCMOS	DVCC	OFF
	S17	O	LVCMOS	DVCC	–
78	P6.3	I/O	LVCMOS	DVCC	OFF
	S16	O	LVCMOS	DVCC	–
79	P6.4	I/O	LVCMOS	DVCC	OFF
	S15	O	LVCMOS	DVCC	–
80	P6.5	I/O	LVCMOS	DVCC	OFF
	S14	O	LVCMOS	DVCC	–
81	P6.6	I/O	LVCMOS	DVCC	OFF
	S13	O	LVCMOS	DVCC	–
82	P6.7	I/O	LVCMOS	DVCC	OFF
	S12	O	LVCMOS	DVCC	–
83	P7.0	I/O	LVCMOS	DVCC	OFF
	S11	O	LVCMOS	DVCC	–
84	P7.1	I/O	LVCMOS	DVCC	OFF
	S10	O	LVCMOS	DVCC	–
85	P7.2	I/O	LVCMOS	DVCC	OFF
	S9	O	LVCMOS	DVCC	–
86	P7.3	I/O	LVCMOS	DVCC	OFF
	S8	O	LVCMOS	DVCC	–

Copyright © 2015–2018, Texas Instruments Incorporated

Table 4-3. Pin Attributes, PZ Package (continued)

PIN NO.	SIGNAL NAME (1) (2)	SIGNAL TYPE (3)	BUFFER TYPE (4)	POWER SOURCE	RESET STATE AFTER BOR (5)
87	P7.4	I/O	LVCMOS	DVCC	OFF
	S7	O	LVCMOS	DVCC	–
88	P7.5	I/O	LVCMOS	DVCC	OFF
	S6	O	LVCMOS	DVCC	–
89	P7.6	I/O	LVCMOS	DVCC	OFF
	S5	O	LVCMOS	DVCC	–
90	P7.7	I/O	LVCMOS	DVCC	OFF
	S4	O	LVCMOS	DVCC	–
91	P8.0	I/O	LVCMOS	DVCC	OFF
	S3	O	LVCMOS	DVCC	–
92	P8.1	I/O	LVCMOS	DVCC	OFF
	S2	O	LVCMOS	DVCC	–
93	P8.2	I/O	LVCMOS	DVCC	OFF
	S1	O	LVCMOS	DVCC	–
94	P8.3	I/O	LVCMOS	DVCC	OFF
	S0	O	LVCMOS	DVCC	–
95	TEST	I	LVCMOS	DVCC	OFF
	SBWTCK	I	LVCMOS	DVCC	–
96	PJ.0	I/O	LVCMOS	DVCC	OFF
	SMCLK	O	LVCMOS	DVCC	–
	TDO	O	LVCMOS	DVCC	–
97	PJ.1	I/O	LVCMOS	DVCC	OFF
	MCLK	O	LVCMOS	DVCC	–
	TDI	I	LVCMOS	DVCC	–
	TCLK	I	LVCMOS	DVCC	–
98	PJ.2	I/O	LVCMOS	DVCC	OFF
	ADC10CLK	O	LVCMOS	DVCC	–
	TMS	I	LVCMOS	DVCC	–
99	PJ.3	I/O	LVCMOS	DVCC	OFF
	ACLK	O	LVCMOS	DVCC	–
	TCK	I	LVCMOS	DVCC	–
100	$\overline{\text{RST}}$	I	LVCMOS	DVCC	PU
	NMI	I	LVCMOS	DVCC	–
	SBWTDIO	I/O	LVCMOS	DVCC	–

Copyright © 2015–2018, Texas Instruments Incorporated

Table 4-4 lists the pin attributes for all device variants in the PN package. For the PZ package, see Table 4-3.

Table 4-4. Pin Attributes, PN Package

PIN NO.	SIGNAL NAME (1) (2)	SIGNAL TYPE (3)	BUFFER TYPE (4)	POWER SOURCE	RESET STATE AFTER BOR (5)
1	SD0P0	I	Analog	AVCC	OFF
2	SD0N0	I	Analog	AVCC	OFF
3	SD1P0	I	Analog	AVCC	OFF
4	SD1N0	I	Analog	AVCC	OFF
5	SD2P0	I	Analog	AVCC	OFF
6	SD2N0	I	Analog	AVCC	OFF
7	VREF	I	Power	–	N/A
8	AVSS	P	Power	–	N/A
9	AVCC	P	Power	–	N/A
10	VASYS	P	Power	–	N/A
11	P1.0	I/O	LVCMOS	DVCC	OFF
	PM_TA0.0	I/O	LVCMOS	DVCC	–
	VeREF-	I	Power	–	–
	A2	I	Analog	AVCC	–
12	P1.1	I/O	LVCMOS	DVCC	OFF
	PM_TA0.1	I/O	LVCMOS	DVCC	–
	VeREF+	I	Power	–	–
	A1	I	Analog	AVCC	–
13	P1.2	I/O	LVCMOS	DVCC	OFF
	PM_UCA0RXD	I	LVCMOS	DVCC	–
	PM_UCA0SOMI	I/O	LVCMOS	DVCC	–
	A0	I	Analog	AVCC	–
14	P1.3	I/O	LVCMOS	DVCC	OFF
	PM_UCA0TXD	O	LVCMOS	DVCC	–
	PM_UCA0SIMO	I/O	LVCMOS	DVCC	–
	R03	I/O	Analog	AVCC	–
15	AUXVCC2	P	Power	–	N/A
16	AUXVCC1	P	Power	–	N/A
17	VDSYS	P	Power	–	N/A
18	DVCC	P	Power	–	N/A
19	DVSS	P	Power	–	N/A
20	VCORE	P	Power	–	N/A
21	XIN	I	LVCMOS	DVCC	OFF
22	XOUT	O	LVCMOS	DVCC	OFF
23	AUXVCC3	P	Power	–	N/A

(1) For each multiplexed pin, the signal that is listed first in this table is the default after reset.
(2) To determine the pin mux encodings for each pin, refer to 节 6.12, *Input/Output Diagrams*.
(3) Signal Types: I = Input, O = Output, I/O = Input or Output.
(4) Buffer Types: LVCMOS, Analog, or Power (see Table 4-7, *Buffer Type*)
(5) Reset States:
OFF = High-impedance input with pullup or pulldown disabled (if available)
N/A = Not applicable

Table 4-4. Pin Attributes, PN Package (continued)

PIN NO.	SIGNAL NAME (1) (2)	SIGNAL TYPE (3)	BUFFER TYPE (4)	POWER SOURCE	RESET STATE AFTER BOR (5)
24	P1.4	I/O	LVCMOS	DVCC	OFF
	PM_UCA1RXD	I	LVCMOS	DVCC	–
	PM_UCA1SOMI	I/O	LVCMOS	DVCC	–
	LCDREF	I	Analog	AVCC	–
	R13	I/O	Analog	AVCC	–
25	P1.5	I/O	LVCMOS	DVCC	OFF
	PM_UCA1TXD	O	LVCMOS	DVCC	–
	PM_UCA1SIMO	I/O	LVCMOS	DVCC	–
	R23	I/O	Analog	AVCC	–
26	LCDCAP	I/O	Analog	AVCC	OFF
	R33	I/O	Analog	AVCC	OFF
27	COM0	O	LVCMOS	DVCC	OFF
28	COM1	O	LVCMOS	DVCC	OFF
29	COM2	O	LVCMOS	DVCC	OFF
30	COM3	O	LVCMOS	DVCC	OFF
31	P1.6	I/O	LVCMOS	DVCC	OFF
	PM_UCA0CLK	I/O	LVCMOS	DVCC	–
	COM4	O	LVCMOS	DVCC	–
32	P1.7	I/O	LVCMOS	DVCC	OFF
	PM_UCB0CLK	I/O	LVCMOS	DVCC	–
	COM5	O	LVCMOS	DVCC	–
33	P2.0	I/O	LVCMOS	DVCC	OFF
	PM_UCB0SOMI	I/O	LVCMOS	DVCC	–
	PM_UCB0SCL	I/O	LVCMOS	DVCC	–
	COM6	O	LVCMOS	DVCC	–
	S39	O	LVCMOS	DVCC	–
34	P2.1	I/O	LVCMOS	DVCC	OFF
	PM_UCB0SIMO	I/O	LVCMOS	DVCC	–
	PM_UCB0SDA	I/O	LVCMOS	DVCC	–
	COM7	O	LVCMOS	DVCC	–
	S38	O	LVCMOS	DVCC	–
35	P2.2	I/O	LVCMOS	DVCC	OFF
	PM_UCA2RXD	I	LVCMOS	DVCC	–
	PM_UCA2SOMI	I/O	LVCMOS	DVCC	–
	S37	O	LVCMOS	DVCC	–
36	P2.3	I/O	LVCMOS	DVCC	OFF
	PM_UCA2TXD	O	LVCMOS	DVCC	–
	PM_UCA2SIMO	I/O	LVCMOS	DVCC	–
	S36	O	LVCMOS	DVCC	–
37	P2.4	I/O	LVCMOS	DVCC	OFF
	PM_UCA1CLK	I/O	LVCMOS	DVCC	–
	S35	O	LVCMOS	DVCC	–
38	P2.5	I/O	LVCMOS	DVCC	OFF
	PM_UCA2CLK	I/O	LVCMOS	DVCC	–
	S34	O	LVCMOS	DVCC	–

Copyright © 2015–2018, Texas Instruments Incorporated

Table 4-4. Pin Attributes, PN Package (continued)

PIN NO.	SIGNAL NAME (1) (2)	SIGNAL TYPE (3)	BUFFER TYPE (4)	POWER SOURCE	RESET STATE AFTER BOR (5)
39	P2.6	I/O	LVCMOS	DVCC	OFF
	PM_TA1.0	I/O	LVCMOS	DVCC	–
	S33	O	LVCMOS	DVCC	–
40	P2.7	I/O	LVCMOS	DVCC	OFF
	PM_TA1.1	I/O	LVCMOS	DVCC	–
	S32	O	LVCMOS	DVCC	–
41	P3.0	I/O	LVCMOS	DVCC	OFF
	PM_TA2.0	I/O	LVCMOS	DVCC	–
	S31	O	LVCMOS	DVCC	–
	BSL_TX	O	LVCMOS	DVCC	–
42	P3.1	I/O	LVCMOS	DVCC	OFF
	PM_TA2.1	I/O	LVCMOS	DVCC	–
	S30	O	LVCMOS	DVCC	–
	BSL_RX	I	LVCMOS	DVCC	–
43	P3.2	I/O	LVCMOS	DVCC	OFF
	PM_TACLK	I	LVCMOS	DVCC	–
	PM_RTCCLK	O	LVCMOS	DVCC	–
	S29	O	LVCMOS	DVCC	–
44	P3.3	I/O	LVCMOS	DVCC	OFF
	PM_TA0.2	I/O	LVCMOS	DVCC	–
	S28	O	LVCMOS	DVCC	–
45	P3.4	I/O	LVCMOS	DVCC	OFF
	PM_SDCLK	I/O	LVCMOS	DVCC	–
	S27	O	LVCMOS	DVCC	–
46	P3.5	I/O	LVCMOS	DVCC	OFF
	PM_SD0DIO	I/O	LVCMOS	DVCC	–
	S26	O	LVCMOS	DVCC	–
47	P3.6	I/O	LVCMOS	DVCC	OFF
	PM_SD1DIO	I/O	LVCMOS	DVCC	–
	S25	O	LVCMOS	DVCC	–
48	P3.7	I/O	LVCMOS	DVCC	OFF
	PM_SD2DIO	I/O	LVCMOS	DVCC	–
	S24	O	LVCMOS	DVCC	–
49	P4.0	I/O	LVCMOS	DVCC	OFF
	S23	O	LVCMOS	DVCC	–
50	P4.1	I/O	LVCMOS	DVCC	OFF
	S22	O	LVCMOS	DVCC	–
51	P4.2	I/O	LVCMOS	DVCC	OFF
	S21	O	LVCMOS	DVCC	–
52	P4.3	I/O	LVCMOS	DVCC	OFF
	S20	O	LVCMOS	DVCC	–
53	P4.4	I/O	LVCMOS	DVCC	OFF
	S19	O	LVCMOS	DVCC	–
54	P4.5	I/O	LVCMOS	DVCC	OFF
	S18	O	LVCMOS	DVCC	–
55	P4.6	I/O	LVCMOS	DVCC	OFF
	S17	O	LVCMOS	DVCC	–

Copyright © 2015–2018, Texas Instruments Incorporated

Table 4-4. Pin Attributes, PN Package (continued)

PIN NO.	SIGNAL NAME (1) (2)	SIGNAL TYPE (3)	BUFFER TYPE (4)	POWER SOURCE	RESET STATE AFTER BOR (5)
56	P4.7	I/O	LVCMOS	DVCC	OFF
	S16	O	LVCMOS	DVCC	–
57	P5.0	I/O	LVCMOS	DVCC	OFF
	S15	O	LVCMOS	DVCC	–
58	P5.1	I/O	LVCMOS	DVCC	OFF
	S14	O	LVCMOS	DVCC	–
59	DVSYS	P	Power	–	N/A
60	DVSS	P	Power	–	N/A
61	P5.2	I/O	LVCMOS	DVCC	OFF
	S13	O	LVCMOS	DVCC	–
62	P5.3	I/O	LVCMOS	DVCC	OFF
	S12	O	LVCMOS	DVCC	–
63	P5.4	I/O	LVCMOS	DVCC	OFF
	S11	O	LVCMOS	DVCC	–
64	P5.5	I/O	LVCMOS	DVCC	OFF
	S10	O	LVCMOS	DVCC	–
65	P5.6	I/O	LVCMOS	DVCC	OFF
	S9	O	LVCMOS	DVCC	–
66	P5.7	I/O	LVCMOS	DVCC	OFF
	S8	O	LVCMOS	DVCC	–
67	P6.0	I/O	LVCMOS	DVCC	OFF
	S7	O	LVCMOS	DVCC	–
68	P6.1	I/O	LVCMOS	DVCC	OFF
	S6	O	LVCMOS	DVCC	–
69	P6.2	I/O	LVCMOS	DVCC	OFF
	S5	O	LVCMOS	DVCC	–
70	P6.3	I/O	LVCMOS	DVCC	OFF
	S4	O	LVCMOS	DVCC	–
71	P6.4	I/O	LVCMOS	DVCC	OFF
	S3	O	LVCMOS	DVCC	–
72	P6.5	I/O	LVCMOS	DVCC	OFF
	S2	O	LVCMOS	DVCC	–
73	P6.6	I/O	LVCMOS	DVCC	OFF
	S1	O	LVCMOS	DVCC	–
74	P6.7	I/O	LVCMOS	DVCC	OFF
	S0	O	LVCMOS	DVCC	–
75	TEST	I	LVCMOS	DVCC	OFF
	SBWTCK	I	LVCMOS	DVCC	–
76	PJ.0	I/O	LVCMOS	DVCC	OFF
	SMCLK	O	LVCMOS	DVCC	–
	TDO	O	LVCMOS	DVCC	–
77	PJ.1	I/O	LVCMOS	DVCC	OFF
	MCLK	O	LVCMOS	DVCC	–
	TDI	I	LVCMOS	DVCC	–
	TCLK	I	LVCMOS	DVCC	–

Copyright © 2015–2018, Texas Instruments Incorporated

Table 4-4. Pin Attributes, PN Package (continued)

PIN NO.	SIGNAL NAME (1) (2)	SIGNAL TYPE (3)	BUFFER TYPE (4)	POWER SOURCE	RESET STATE AFTER BOR (5)
78	PJ.2	I/O	LVCMOS	DVCC	OFF
	ADC10CLK	O	LVCMOS	DVCC	–
	TMS	I	LVCMOS	DVCC	–
79	PJ.3	I/O	LVCMOS	DVCC	OFF
	ACLK	O	LVCMOS	DVCC	–
	TCK	I	LVCMOS	DVCC	–
80	$\overline{\text{RST}}$	I/O	LVCMOS	DVCC	PU
	NMI	I	LVCMOS	DVCC	–
	SBWTDIO	I/O	LVCMOS	DVCC	–

4.3 Signal Descriptions

Table 4-5 describes the signals for all device variants in the PZ package. See Table 4-6 for signal descriptions in the PN package.

Table 4-5. Signal Descriptions, PZ Package

FUNCTION	SIGNAL NAME	PIN NO.	SIGNAL TYPE	DESCRIPTION
ADC10	A0	16	I	Analog input A0 for 10-bit ADC
	A1	15	I	Analog input A1 for 10-bit ADC
	A2	14	I	Analog input A2 for 10-bit ADC
	A3	13	I	Analog input A3 for 10-bit ADC
	A4	12	I	Analog input A4 for 10-bit ADC
	A5	11	I	Analog input A5 for 10-bit ADC
	ADC10CLK	98	O	ADC10_A clock output
	VeREF+	15	I	Positive terminal for the ADC reference voltage for an external applied reference voltage
	VeREF-	14	I	Negative terminal for the ADC reference voltage for an external applied reference voltage
BSL	BSL_RX	50	I	Bootloader data receive
	BSL_TX	49	O	Bootloader data transmit
Clock	ACLK	99	O	ACLK clock output
	MCLK	97	O	MCLK clock output
	PM_RTCCLK	51	O	Default mapping: RTCCLK clock output
	RTCCLK	42	O	RTCCLK clock output
	SMCLK	96	O	SMCLK clock output
	XIN	24	I	Input terminal for crystal oscillator
	XOUT	25	O	Output terminal for crystal oscillator
Debug	SBWTCK	95	I	Spy-Bi-Wire input clock
	SBWTDIO	100	I/O	Spy-Bi-Wire data input/output
	TCK	99	I	Test clock
	TCLK	97	I	Test clock input
	TDI	97	I	Test data input
	TDO	96	O	Test data output
	TEST	95	I	Test mode pin – select digital I/O on JTAG pins
	TMS	98	I	Test mode select
GPIO	P1.0	14	I/O	General-purpose digital I/O with port interrupt and mappable secondary function
	P1.1	15	I/O	General-purpose digital I/O with port interrupt and mappable secondary function
	P1.2	16	I/O	General-purpose digital I/O with port interrupt and mappable secondary function
	P1.3	17	I/O	General-purpose digital I/O with port interrupt and mappable secondary function
	P1.4	27	I/O	General-purpose digital I/O with port interrupt and mappable secondary function
	P1.5	28	I/O	General-purpose digital I/O with port interrupt and mappable secondary function
	P1.6	36	I/O	General-purpose digital I/O with port interrupt and mappable secondary function
	P1.7	37	I/O	General-purpose digital I/O with port interrupt and mappable secondary function

Copyright © 2015–2018, Texas Instruments Incorporated

Table 4-5. Signal Descriptions, PZ Package (continued)

FUNCTION	SIGNAL NAME	PIN NO.	SIGNAL TYPE	DESCRIPTION
GPIO	P2.0	38	I/O	General-purpose digital I/O with port interrupt and mappable secondary function
	P2.1	39	I/O	General-purpose digital I/O with port interrupt and mappable secondary function
	P2.2	43	I/O	General-purpose digital I/O with port interrupt and mappable secondary function
	P2.3	44	I/O	General-purpose digital I/O with port interrupt and mappable secondary function
	P2.4	45	I/O	General-purpose digital I/O with port interrupt and mappable secondary function
	P2.5	46	I/O	General-purpose digital I/O with port interrupt and mappable secondary function
	P2.6	47	I/O	General-purpose digital I/O with port interrupt and mappable secondary function
	P2.7	48	I/O	General-purpose digital I/O with port interrupt and mappable secondary function
	P3.0	49	I/O	General-purpose digital I/O with mappable secondary function
	P3.1	50	I/O	General-purpose digital I/O with mappable secondary function
	P3.2	51	I/O	General-purpose digital I/O with mappable secondary function
	P3.3	52	I/O	General-purpose digital I/O with mappable secondary function
	P3.4	53	I/O	General-purpose digital I/O with mappable secondary function
	P3.5	54	I/O	General-purpose digital I/O with mappable secondary function
	P3.6	55	I/O	General-purpose digital I/O with mappable secondary function
	P3.7	56	I/O	General-purpose digital I/O with mappable secondary function
	P4.0	57	I/O	General-purpose digital I/O
	P4.1	58	I/O	General-purpose digital I/O
	P4.2	59	I/O	General-purpose digital I/O
	P4.3	60	I/O	General-purpose digital I/O
	P4.4	61	I/O	General-purpose digital I/O
	P4.5	62	I/O	General-purpose digital I/O
	P4.6	63	I/O	General-purpose digital I/O
	P4.7	64	I/O	General-purpose digital I/O
	P5.0	65	I/O	General-purpose digital I/O
	P5.1	66	I/O	General-purpose digital I/O
	P5.2	67	I/O	General-purpose digital I/O
	P5.3	68	I/O	General-purpose digital I/O
	P5.4	69	I/O	General-purpose digital I/O
	P5.5	70	I/O	General-purpose digital I/O
	P5.6	71	I/O	General-purpose digital I/O
	P5.7	72	I/O	General-purpose digital I/O
	P6.0	73	I/O	General-purpose digital I/O
	P6.1	76	I/O	General-purpose digital I/O
	P6.2	77	I/O	General-purpose digital I/O
	P6.3	78	I/O	General-purpose digital I/O
	P6.4	79	I/O	General-purpose digital I/O
	P6.5	80	I/O	General-purpose digital I/O
	P6.6	81	I/O	General-purpose digital I/O
	P6.7	82	I/O	General-purpose digital I/O

Copyright © 2015–2018, Texas Instruments Incorporated

Table 4-5. Signal Descriptions, PZ Package (continued)

FUNCTION	SIGNAL NAME	PIN NO.	SIGNAL TYPE	DESCRIPTION
GPIO	P7.0	83	I/O	General-purpose digital I/O
	P7.1	84	I/O	General-purpose digital I/O
	P7.2	85	I/O	General-purpose digital I/O
	P7.3	86	I/O	General-purpose digital I/O
	P7.4	87	I/O	General-purpose digital I/O
	P7.5	88	I/O	General-purpose digital I/O
	P7.6	89	I/O	General-purpose digital I/O
	P7.7	90	I/O	General-purpose digital I/O
	P8.0	91	I/O	General-purpose digital I/O
	P8.1	92	I/O	General-purpose digital I/O
	P8.2	93	I/O	General-purpose digital I/O
	P8.3	94	I/O	General-purpose digital I/O
	P8.4	30	I/O	General-purpose digital I/O
	P8.5	31	I/O	General-purpose digital I/O
	P8.6	40	I/O	General-purpose digital I/O
	P8.7	41	I/O	General-purpose digital I/O
	P9.0	42	I/O	General-purpose digital I/O
	P9.1	11	I/O	General-purpose digital I/O
	P9.2	12	I/O	General-purpose digital I/O
	P9.3	13	I/O	General-purpose digital I/O
	PJ.0	96	I/O	General-purpose digital I/O
	PJ.1	97	I/O	General-purpose digital I/O
	PJ.2	98	I/O	General-purpose digital I/O
	PJ.3	99	I/O	General-purpose digital I/O
I^2C	PM_UCB0SCL	38	I/O	Default mapping: eUSCI_B0 I^2C clock
	PM_UCB0SDA	39	I/O	Default mapping: eUSCI_B0 I^2C data
LCD	COM0	32	O	LCD common output COM0 for LCD backplane
	COM1	33	O	LCD common output COM1 for LCD backplane
	COM2	34	O	LCD common output COM2 for LCD backplane
	COM3	35	O	LCD common output COM3 for LCD backplane
	COM4	36	O	LCD common output COM4 for LCD backplane
	COM5	37	O	LCD common output COM5 for LCD backplane
	COM6	38	O	LCD common output COM6 for LCD backplane
	COM7	39	O	LCD common output COM7 for LCD backplane
	LCDCAP	29	I/O	LCD capacitor connection **CAUTION**: This pin must be connected to DVSS if not used.
	LCDREF	27	I	External reference voltage input for regulated LCD voltage
	R03	17	I/O	Input/output port of lowest analog LCD voltage (V5)
	R13	27	I/O	Input/output port of third most positive analog LCD voltage (V3 or V4)
	R23	28	I/O	Input/output port of second most positive analog LCD voltage (V2)
	R33	29	I/O	Input/output port of most positive analog LCD voltage (V1) **CAUTION**: This pin must be connected to DVSS if not used.

Copyright © 2015–2018, Texas Instruments Incorporated

Table 4-5. Signal Descriptions, PZ Package (continued)

FUNCTION	SIGNAL NAME	PIN NO.	SIGNAL TYPE	DESCRIPTION
LCD	S0	94	O	LCD segment output S0
	S1	93	O	LCD segment output S1
	S2	92	O	LCD segment output S2
	S3	91	O	LCD segment output S3
	S4	90	O	LCD segment output S4
	S5	89	O	LCD segment output S5
	S6	88	O	LCD segment output S6
	S7	87	O	LCD segment output S7
	S8	86	O	LCD segment output S8
	S9	85	O	LCD segment output S9
	S10	84	O	LCD segment output S10
	S11	83	O	LCD segment output S11
	S12	82	O	LCD segment output S12
	S13	81	O	LCD segment output S13
	S14	80	O	LCD segment output S14
	S15	79	O	LCD segment output S15
	S16	78	O	LCD segment output S16
	S17	77	O	LCD segment output S17
	S18	76	O	LCD segment output S18
	S19	73	O	LCD segment output S19
	S20	72	O	LCD segment output S20
	S21	71	O	LCD segment output S21
	S22	70	O	LCD segment output S22
	S23	69	O	LCD segment output S23
	S24	68	O	LCD segment output S24
	S25	67	O	LCD segment output S25
	S26	66	O	LCD segment output S26
	S27	65	O	LCD segment output S27
	S28	64	O	LCD segment output S28
	S29	63	O	LCD segment output S29
	S30	62	O	LCD segment output S30
	S31	61	O	LCD segment output S31
	S32	60	O	LCD segment output S32
	S33	59	O	LCD segment output S33
	S34	58	O	LCD segment output S34
	S35	57	O	LCD segment output S35
	S36	56	O	LCD segment output S36
	S37	55	O	LCD segment output S37
	S38	54	O	LCD segment output S38
	S39	53	O	LCD segment output S39

Copyright © 2015–2018, Texas Instruments Incorporated

Table 4-5. Signal Descriptions, PZ Package (continued)

FUNCTION	SIGNAL NAME	PIN NO.	SIGNAL TYPE	DESCRIPTION
Power	AUXVCC1	19	P	Auxiliary power supply AUXVCC1
	AUXVCC2	18	P	Auxiliary power supply AUXVCC2
	AUXVCC3	26	P	Auxiliary power supply AUXVCC3 for back up subsystem
	AVCC	9	P	Analog power supply
	AVSS	8	P	Analog ground supply
	DVCC	21	P	Digital power supply
	DVSS	22 75	P	Digital ground supply
	DVSYS (1)	74	P	Digital power supply for I/Os
	VASYS	10	P	Analog power supply selected among AVCC, AUXVCC1, AUXVCC2. Connect recommended capacitor value of C_{VSYS} (see Table 5-18).
	VCORE (2)	23	P	Regulated core power supply (internal use only, no external current loading)
	VDSYS (1)	20	P	Digital power supply selected between DVCC, AUXVCC1, AUXVCC2. Connect recommended capacitor value of C_{VSYS} (see Table 5-18).
SD24	PM_SD0DIO	54	I/O	Default mapping: SD24_B converter 0 bit stream data input/output
	PM_SD1DIO	55	I/O	Default mapping: SD24_B converter 1 bit stream data input/output
	PM_SD2DIO	56	I/O	Default mapping: SD24_B converter 2 bit stream data input/output (not available on F672xA devices)
	PM_SDCLK	53	I/O	Default mapping: SD24_B bit stream clock input/output
	SD0N0	2	I	SD24_B negative analog input for converter 0 (3)
	SD0P0	1	I	SD24_B positive analog input for converter 0 (3)
	SD1N0	4	I	SD24_B negative analog input for converter 1 (3)
	SD1P0	3	I	SD24_B positive analog input for converter 1 (3)
	SD2N0	6	I	SD24_B negative analog input for converter 2 (3) (not available on F672xA devices)
	SD2P0	5	I	SD24_B positive analog input for converter 2 (3) (not available on F672xA devices)
	VREF	7	O	SD24_B external reference voltage
SPI	PM_UCA0CLK	36	I/O	Default mapping: eUSCI_A0 clock input/output
	PM_UCA0SIMO	17	I/O	Default mapping: eUSCI_A0 SPI slave in/master out
	PM_UCA0SOMI	16	I/O	Default mapping: eUSCI_A0 SPI slave out/master in
	PM_UCA1CLK	45	I/O	Default mapping: eUSCI_A1 clock input/output
	PM_UCA1SIMO	28	I/O	Default mapping: eUSCI_A1 SPI slave in/master out
	PM_UCA1SOMI	27	I/O	Default mapping: eUSCI_A1 SPI slave out/master in
	PM_UCA2CLK	46	I/O	Default mapping: eUSCI_A2 clock input/output
	PM_UCA2SIMO	44	I/O	Default mapping: eUSCI_A2 SPI slave in/master out
	PM_UCA2SOMI	43	I/O	Default mapping: eUSCI_A2 SPI slave out/master in
	PM_UCB0CLK	37	I/O	Default mapping: eUSCI_B0 clock input/output
	PM_UCB0SIMO	39	I/O	Default mapping: eUSCI_B0 SPI slave in/master out
	PM_UCB0SOMI	38	I/O	Default mapping: eUSCI_B0 SPI slave out/master in
System	NMI	100	I	Nonmaskable interrupt input
	$\overline{RST}$	100	I	Reset input active low (4)

(1) The pins VDSYS and DVSYS must be connected externally on board for proper device operation.
(2) VCORE is for internal use only. No external current loading is possible. VCORE should only be connected to the recommended capacitor value, C_{VCORE}.
(3) TI recommends shorting unused analog input pairs and connect them to analog ground.
(4) When this pin is configured as reset, the internal pullup resistor is enabled by default.

Copyright © 2015–2018, Texas Instruments Incorporated

Table 4-5. Signal Descriptions, PZ Package (continued)

FUNCTION	SIGNAL NAME	PIN NO.	SIGNAL TYPE	DESCRIPTION
Timer_A	PM_TA0.0	14	I/O	Default mapping: Timer TA0 CCR0 capture: CCI0A input, compare: Out0 output
	PM_TA0.1	15	I/O	Default mapping: Timer TA0 CCR1 capture: CCI1A input, compare: Out1 output
	PM_TA0.2	52	I/O	Default mapping: Timer TA0 capture CCR2: CCI2A input, compare: Out2 output
	PM_TA1.0	47	I/O	Default mapping: Timer TA1 capture CCR0: CCI0A input, compare: Out0 output
	PM_TA1.1	48	I/O	Default mapping: Timer TA1 capture CCR1: CCI1A input, compare: Out1 output
	PM_TA2.0	49	I/O	Default mapping: Timer TA2 capture CCR0: CCI0A input, compare: Out0 output
	PM_TA2.1	50	I/O	Default mapping: Timer TA2 capture CCR1: CCI1A input, compare: Out1 output
	PM_TACLK	51	I	Default mapping: Timer clock input TACLK for TA0, TA1, TA2, TA3
	TA1.0	30	I/O	Timer TA1 CCR0 capture: CCI0A input, compare: Out0 output
	TA1.1	31	I/O	Timer TA1 CCR1 capture: CCI1A input, compare: Out1 output
	TA2.0	40	I/O	Timer TA2 CCR0 capture: CCI0A input, compare: Out0 output
	TA2.1	41	I/O	Timer TA2 CCR1 capture: CCI1A input, compare: Out1 output
	TACLK	42	I	Timer clock input TACLK for TA0, TA1, TA2, TA3
UART	PM_UCA0RXD	16	I	Default mapping: eUSCI_A0 UART receive data
	PM_UCA0TXD	17	O	Default mapping: eUSCI_A0 UART transmit data
	PM_UCA1RXD	27	I	Default mapping: eUSCI_A1 UART receive data
	PM_UCA1TXD	28	O	Default mapping: eUSCI_A1 UART transmit data
	PM_UCA2RXD	43	I	Default mapping: eUSCI_A2 UART receive data
	PM_UCA2TXD	44	O	Default mapping: eUSCI_A2 UART transmit data

Copyright © 2015–2018, Texas Instruments Incorporated

Table 4-6 describes the signals for all device variants in the PN package. See Table 4-5 for signal descriptions in the PZ package.

Table 4-6. Signal Descriptions, PN Package

FUNCTION	SIGNAL NAME	PIN NO.	SIGNAL TYPE (1)	DESCRIPTION
ADC10	A0	13	I	Analog input A0 for 10-bit ADC
	A1	12	I	Analog input A1 for 10-bit ADC
	A2	11	I	Analog input A2 for 10-bit ADC
	ADC10CLK	78	O	ADC10_A clock output
	VeREF+	12	I	Positive terminal for the ADC reference voltage for an external applied reference voltage
	VeREF-	11	I	Negative terminal for the ADC reference voltage for an external applied reference voltage
BSL	BSL_RX	42	I	Bootloader data receive
	BSL_TX	41	O	Bootloader data transmit
Clock	ACLK	79	O	ACLK clock output
	MCLK	77	O	MCLK clock output
	PM_RTCCLK	43	O	Default mapping: RTCCLK clock output
	SMCLK	76	O	SMCLK clock output
	XIN	21	I	Input terminal for crystal oscillator
	XOUT	22	O	Output terminal for crystal oscillator
Debug	SBWTCK	75	I	Spy-Bi-Wire input clock
	SBWTDIO	80	I/O	Spy-Bi-Wire data input/output
	TCK	79	I	Test clock
	TCLK	77	I	Test clock input
	TDI	77	I	Test data input
	TDO	76	O	Test data output
	TEST	75	I	Test mode pin – select digital I/O on JTAG pins
	TMS	78	I	Test mode select
GPIO	P1.0	11	I/O	General-purpose digital I/O with port interrupt and mappable secondary function
	P1.1	12	I/O	General-purpose digital I/O with port interrupt and mappable secondary function
	P1.2	13	I/O	General-purpose digital I/O with port interrupt and mappable secondary function
	P1.3	14	I/O	General-purpose digital I/O with port interrupt and mappable secondary function
	P1.4	24	I/O	General-purpose digital I/O with port interrupt and mappable secondary function
	P1.5	25	I/O	General-purpose digital I/O with port interrupt and mappable secondary function
	P1.6	31	I/O	General-purpose digital I/O with port interrupt and mappable secondary function
	P1.7	32	I/O	General-purpose digital I/O with port interrupt and mappable secondary function
	P2.0	33	I/O	General-purpose digital I/O with port interrupt and mappable secondary function
	P2.1	34	I/O	General-purpose digital I/O with port interrupt and mappable secondary function
	P2.2	35	I/O	General-purpose digital I/O with port interrupt and mappable secondary function
	P2.3	36	I/O	General-purpose digital I/O with port interrupt and mappable secondary function

(1) I = input, O = output

Copyright © 2015–2018, Texas Instruments Incorporated

Table 4-6. Signal Descriptions, PN Package (continued)

FUNCTION	SIGNAL NAME	PIN NO.	SIGNAL TYPE(1)	DESCRIPTION
GPIO	P2.4	37	I/O	General-purpose digital I/O with port interrupt and mappable secondary function
	P2.5	38	I/O	General-purpose digital I/O with port interrupt and mappable secondary function
	P2.6	39	I/O	General-purpose digital I/O with port interrupt and mappable secondary function
	P2.7	40	I/O	General-purpose digital I/O with port interrupt and mappable secondary function
	P3.0	41	I/O	General-purpose digital I/O with mappable secondary function
	P3.1	42	I/O	General-purpose digital I/O with mappable secondary function
	P3.2	43	I/O	General-purpose digital I/O with mappable secondary function
	P3.3	44	I/O	General-purpose digital I/O with mappable secondary function
	P3.4	45	I/O	General-purpose digital I/O with mappable secondary function
	P3.5	46	I/O	General-purpose digital I/O with mappable secondary function
	P3.6	47	I/O	General-purpose digital I/O with mappable secondary function
	P3.7	48	I/O	General-purpose digital I/O with mappable secondary function
	P4.0	49	I/O	General-purpose digital I/O
	P4.1	50	I/O	General-purpose digital I/O
	P4.2	51	I/O	General-purpose digital I/O
	P4.3	52	I/O	General-purpose digital I/O
	P4.4	53	I/O	General-purpose digital I/O
	P4.5	54	I/O	General-purpose digital I/O
	P4.6	55	I/O	General-purpose digital I/O
	P4.7	56	I/O	General-purpose digital I/O
	P5.0	57	I/O	General-purpose digital I/O
	P5.1	58	I/O	General-purpose digital I/O
	P5.2	61	I/O	General-purpose digital I/O
	P5.3	62	I/O	General-purpose digital I/O
	P5.4	63	I/O	General-purpose digital I/O
	P5.5	64	I/O	General-purpose digital I/O
	P5.6	65	I/O	General-purpose digital I/O
	P5.7	66	I/O	General-purpose digital I/O
	P6.0	67	I/O	General-purpose digital I/O
	P6.1	68	I/O	General-purpose digital I/O
	P6.2	69	I/O	General-purpose digital I/O
	P6.3	70	I/O	General-purpose digital I/O
	P6.4	71	I/O	General-purpose digital I/O
	P6.5	72	I/O	General-purpose digital I/O
	P6.6	73	I/O	General-purpose digital I/O
	P6.7	74	I/O	General-purpose digital I/O
	PJ.0	76	I/O	General-purpose digital I/O
	PJ.1	77	I/O	General-purpose digital I/O
	PJ.2	78	I/O	General-purpose digital I/O
	PJ.3	79	I/O	General-purpose digital I/O
I^2C	PM_UCB0SCL	33	I/O	Default mapping: eUSCI_B0 I^2C clock
	PM_UCB0SDA	34	I/O	Default mapping: eUSCI_B0 I^2C data

Table 4-6. Signal Descriptions, PN Package (continued)

FUNCTION	SIGNAL NAME	PIN NO.	SIGNAL TYPE(1)	DESCRIPTION
LCD	COM0	27	O	LCD common output COM0 for LCD backplane
	COM1	28	O	LCD common output COM1 for LCD backplane
	COM2	29	O	LCD common output COM2 for LCD backplane
	COM3	30	O	LCD common output COM3 for LCD backplane
	COM4	31	O	LCD common output COM4 for LCD backplane
	COM5	32	O	LCD common output COM5 for LCD backplane
	COM6	33	O	LCD common output COM6 for LCD backplane
	COM7	34	O	LCD common output COM7 for LCD backplane
	LCDCAP	26	I/O	LCD capacitor connection **CAUTION**: This pin must be connected to DVSS if not used.
	LCDREF	24	I	External reference voltage input for regulated LCD voltage
	R03	14	I/O	Input/output port of lowest analog LCD voltage (V5)
	R13	24	I/O	Input/output port of third most positive analog LCD voltage (V3 or V4)
	R23	25	I/O	Input/output port of second most positive analog LCD voltage (V2)
	R33	26	I/O	Input/output port of most positive analog LCD voltage (V1) **CAUTION**: This pin must be connected to DVSS if not used.
	S0	74	O	LCD segment output S0
	S1	73	O	LCD segment output S1
	S2	72	O	LCD segment output S2
	S3	71	O	LCD segment output S3
	S4	70	O	LCD segment output S4
	S5	69	O	LCD segment output S5
	S6	68	O	LCD segment output S6
	S7	67	O	LCD segment output S7
	S8	66	O	LCD segment output S8
	S9	65	O	LCD segment output S9
	S10	64	O	LCD segment output S10
	S11	63	O	LCD segment output S11
	S12	62	O	LCD segment output S12
	S13	61	O	LCD segment output S13
	S14	58	O	LCD segment output S14
	S15	57	O	LCD segment output S15
	S16	56	O	LCD segment output S16
	S17	55	O	LCD segment output S17
	S18	54	O	LCD segment output S18
	S19	53	O	LCD segment output S19
	S20	52	O	LCD segment output S20
	S21	51	O	LCD segment output S21
	S22	50	O	LCD segment output S22
	S23	49	O	LCD segment output S23
	S24	48	O	LCD segment output S24
	S25	47	O	LCD segment output S25
	S26	46	O	LCD segment output S26

Copyright © 2015–2018, Texas Instruments Incorporated

Table 4-6. Signal Descriptions, PN Package (continued)

FUNCTION	SIGNAL NAME	PIN NO.	SIGNAL TYPE(1)	DESCRIPTION
LCD	S27	45	O	LCD segment output S27
	S28	44	O	LCD segment output S28
	S29	43	O	LCD segment output S29
	S30	42	O	LCD segment output S30
	S31	41	O	LCD segment output S31
	S32	40	O	LCD segment output S32
	S33	39	O	LCD segment output S33
	S34	38	O	LCD segment output S34
	S35	37	O	LCD segment output S35
	S36	36	O	LCD segment output S36
	S37	35	O	LCD segment output S37
	S38	34	O	LCD segment output S38
	S39	33	O	LCD segment output S39
Power	AUXVCC1	16	P	Auxiliary power supply AUXVCC1
	AUXVCC2	15	P	Auxiliary power supply AUXVCC2
	AUXVCC3	23	P	Auxiliary power supply AUXVCC3 for backup subsystem
	AVCC	9	P	Analog power supply
	AVSS	8	P	Analog ground supply
	DVCC	18	P	Digital power supply
	DVSS	19	P	Digital ground supply
	DVSS	60	P	Digital ground supply
	DVSYS(2)	59	P	Digital power supply for I/Os
	VASYS	10	P	Analog power supply selected between AVCC, AUXVCC1, AUXVCC2. Connect recommended capacitor value of C_{VSYS} (see Table 5-18).
	VCORE(3)	20	P	Regulated core power supply (internal use only, no external current loading)
	VDSYS(2)	17	P	Digital power supply selected between DVCC, AUXVCC1, AUXVCC2. Connect recommended capacitor value of C_{VSYS} (see Table 5-18).
SD24	PM_SD0DIO	46	I/O	Default mapping: SD24_B converter 0 bit stream data input/output
	PM_SD1DIO	47	I/O	Default mapping: SD24_B converter 1 bit stream data input/output
	PM_SD2DIO	48	I/O	Default mapping: SD24_B converter 2 bit stream data input/output (not available on F672xA devices)
	PM_SDCLK	45	I/O	Default mapping: SD24_B bit stream clock input/output
	SD0N0	2	I	SD24_B negative analog input for converter 0(4)
	SD0P0	1	I	SD24_B positive analog input for converter 0(4)
	SD1N0	4	I	SD24_B negative analog input for converter 1(4)
	SD1P0	3	I	SD24_B positive analog input for converter 1(4)
	SD2N0	6	I	SD24_B negative analog input for converter 2(4) (not available on F672xA devices)
	SD2P0	5	I	SD24_B positive analog input for converter 2(4) (not available on F672xA devices)
	VREF	7	I	SD24_B external reference voltage

(2) The pins VDSYS and DVSYS must be connected externally on board for proper device operation.
(3) VCORE is for internal use only. No external current loading is possible. VCORE should only be connected to the recommended capacitor value, C_{VCORE}.
(4) TI recommends shorting unused analog input pairs and connect them to analog ground.

Copyright © 2015–2018, Texas Instruments Incorporated

Table 4-6. Signal Descriptions, PN Package (continued)

FUNCTION	SIGNAL NAME	PIN NO.	SIGNAL TYPE (1)	DESCRIPTION
SPI	PM_UCA0CLK	31	I/O	Default mapping: eUSCI_A0 clock input/output
	PM_UCA0SIMO	14	I/O	Default mapping: eUSCI_A0 SPI slave in/master out
	PM_UCA0SOMI	13	I/O	Default mapping: eUSCI_A0 SPI slave out/master in
	PM_UCA1CLK	37	I/O	Default mapping: eUSCI_A1 clock input/output
	PM_UCA1SIMO	25	I/O	Default mapping: eUSCI_A1 SPI slave in/master out
	PM_UCA1SOMI	24	I/O	Default mapping: eUSCI_A1 SPI slave out/master in
	PM_UCA2CLK	38	I/O	Default mapping: eUSCI_A2 clock input/output
	PM_UCA2SIMO	36	I/O	Default mapping: eUSCI_A2 SPI slave in/master out
	PM_UCA2SOMI	35	I/O	Default mapping: eUSCI_A2 SPI slave out/master in
	PM_UCB0CLK	32	I/O	Default mapping: eUSCI_B0 clock input/output
	PM_UCB0SIMO	34	I/O	Default mapping: eUSCI_B0 SPI slave in/master out
	PM_UCB0SOMI	33	I/O	Default mapping: eUSCI_B0 SPI slave out/master in
System	NMI	80	I	Nonmaskable interrupt input
	$\overline{\text{RST}}$	80	I/O	Reset input active low (5)
Timer_A	PM_TA0.0	11	I/O	Default mapping: Timer TA0 CCR0 capture: CCI0A input, compare: Out0 output
	PM_TA0.1	12	I/O	Default mapping: Timer TA0 CCR1 capture: CCI1A input, compare: Out1 output
	PM_TA0.2	44	I/O	Default mapping: Timer TA0 capture CCR2: CCI2A input, compare: Out2 output
	PM_TA1.0	39	I/O	Default mapping: Timer TA1 capture CCR0: CCI0A input, compare: Out0 output
	PM_TA1.1	40	I/O	Default mapping: Timer TA1 capture CCR1: CCI1A input, compare: Out1 output
	PM_TA2.0	41	I/O	Default mapping: Timer TA2 capture CCR0: CCI0A input, compare: Out0 output
	PM_TA2.1	42	I/O	Default mapping: Timer TA2 capture CCR1: CCI1A input, compare: Out1 output
	PM_TACLK	43	I	Default mapping: Timer clock input TACLK for TA0, TA1, TA2, TA3
UART	PM_UCA0RXD	13	I	Default mapping: eUSCI_A0 UART receive data
	PM_UCA0TXD	14	O	Default mapping: eUSCI_A0 UART transmit data
	PM_UCA1RXD	24	I	Default mapping: eUSCI_A1 UART receive data
	PM_UCA1TXD	25	O	Default mapping: eUSCI_A1 UART transmit data
	PM_UCA2RXD	35	I	Default mapping: eUSCI_A2 UART receive data
	PM_UCA2TXD	36	O	Default mapping: eUSCI_A2 UART transmit data

(5) When this pin is configured as reset, the internal pullup resistor is enabled by default.

Copyright © 2015–2018, Texas Instruments Incorporated

4.4 Pin Multiplexing

Pin multiplexing for these devices is controlled by both register settings and operating modes (for example, if the device is in test mode). For details of the settings for each pin and schematics of the multiplexed ports, see 节 6.12.

4.5 Buffer Type

Table 4-7 describes the buffer types that are referenced in Table 4-3 and Table 4-4.

Table 4-7. Buffer Type

BUFFER TYPE (STANDARD)	NOMINAL VOLTAGE	HYSTERESIS	PU OR PD	NOMINAL PU OR PD STRENGTH (µA)	OUTPUT DRIVE STRENGTH (mA)	OTHER CHARACTERISTICS
LVCMOS	3.0 V	Y	Programmable	See 节 5.8.4 *Digital I/O Ports*	See 节 5.8.4 *Digital I/O Ports*	
Analog	3.0 V	N	N/A	N/A	N/A	See analog modules in Section 5, *Specifications*, for details.
Power	3.0 V	Y with SVS on	N/A	N/A	N/A	

4.6 Connection of Unused Pins

Table 4-8 lists the correct termination of unused pins.

Table 4-8. Connection of Unused Pins(1)

PIN	POTENTIAL	COMMENT
AVCC	DV_{CC}	
AVSS	DV_{SS}	
Px.y	Open	Switched to port function, output direction (PxDIR.n = 1). Px.y represents port x and bit y of port x (for example, P1.0, P1.1, P2.2, PJ.0, PJ.1)
XIN	DV_{SS}	For dedicated XIN pins only. XIN pins with shared GPIO functions should be programmed to GPIO and follow Px.y recommendations.
XOUT	Open	For dedicated XOUT pins only. XOUT pins with shared GPIO functions should be programmed to GPIO and follow Px.y recommendations.
LCDCAP	DV_{SS}	
$\overline{RST}$/NMI	DV_{CC} or V_{CC}	47-kΩ pullup or internal pullup selected with 10-nF (2.2-nF) pulldown(2)
PJ.0/TDO PJ.1/TDI PJ.2/TMS PJ.3/TCK	Open	The JTAG pins are shared with general-purpose I/O function (PJ.x). If not being used, these should be switched to port function, output direction (PJDIR.n = 1). When used as JTAG pins, these pins should remain open.
TEST	Open	This pin always has an internal pulldown enabled.

(1) Any unused pin with a secondary function that is shared with a general-purpose I/O must follow the Px.y unused pin connection guidelines.
(2) The pulldown capacitor should not exceed 2.2 nF when using devices with Spy-Bi-Wire interface in Spy-Bi-Wire mode or in 4-wire JTAG mode with TI tools such as FET interfaces or GANG programmers.

5 Specifications

All graphs in this section are for typical conditions, unless otherwise noted.

Typical (TYP) values are specified at V_{CC} = 3.3 V and T_A = 25°C, unless otherwise noted.

5.1 Absolute Maximum Ratings

over operating free-air temperature range (unless otherwise noted)[1]

		MIN	MAX	UNIT
Voltage applied at DVCC to DVSS		–0.3	4.1	V
Voltage applied to pins[2]	All pins except VCORE[3], SD24_B input pins (SDxN0, SDxP0)[4], AUXVCC1, AUXVCC2, and AUXVCC3[5]	–0.3	V_{CC} + 0.3	V
Diode current at pins	All pins except SD24_B input pins (SDxN0, SDxP0)		±2	mA
	SD0N0, SD0P0, SD1N0, SD1P0, SD2N0, SD2P0[6]		2	
Maximum junction temperature, T_J			95	°C
Storage temperature, T_{stg}[7]		–55	105	°C

(1) Stresses beyond those listed under *Absolute Maximum Ratings* may cause permanent damage to the device. These are stress ratings only, and functional operation of the device at these or any other conditions beyond those indicated under *Recommended Operating Conditions* is not implied. Exposure to absolute-maximum-rated conditions for extended periods may affect device reliability.
(2) All voltages referenced to V_{SS} = V_{DVSS} = V_{AVSS}.
(3) VCORE is for internal device use only. No external DC loading or voltage should be applied.
(4) See Table 5-35 for SD24_B specifications.
(5) See Table 5-18 for AUX specifications.
(6) A protection diode is connected to V_{CC} for the SD24_B input pins. No protection diode is connected to V_{SS}.
(7) Higher temperature may be applied during board soldering according to the current JEDEC J-STD-020 specification with peak reflow temperatures not higher than classified on the device label on the shipping boxes or reels.

5.2 ESD Ratings

			VALUE	UNIT
$V_{(ESD)}$	Electrostatic discharge	Human-body model (HBM), per ANSI/ESDA/JEDEC JS-001[1]	±1000	V
		Charged-device model (CDM), per JEDEC specification JESD22-C101[2]	±250	

(1) JEDEC document JEP155 states that 500-V HBM allows safe manufacturing with a standard ESD control process. Pins listed as ±1000 V may actually have higher performance.
(2) JEDEC document JEP157 states that 250-V CDM allows safe manufacturing with a standard ESD control process. Pins listed as ±250 V may actually have higher performance.

5.3 Recommended Operating Conditions

			MIN	NOM	MAX	UNIT
V_{CC}	Supply voltage during program execution and flash programming. $V_{(AVCC)}$ = $V_{(DVCC)}$ = V_{CC} [1] [2]	PMMCOREVx = 0	1.8		3.6	V
		PMMCOREVx = 0, 1	2.0		3.6	
		PMMCOREVx = 0, 1, 2	2.2		3.6	
		PMMCOREVx = 0, 1, 2, 3	2.4		3.6	
V_{SS}	Supply voltage $V_{(AVSS)}$ = $V_{(DVSS)}$ = V_{SS}			0		V
T_A	Operating free-air temperature	I version	–40		85	°C
T_J	Operating junction temperature	I version	–40		85	°C
C_{VCORE}	Recommended capacitor at VCORE[3]			470		nF
C_{DVCC} / C_{VCORE}	Capacitor ratio of DVCC to VCORE		10			

(1) TI recommends powering AVCC and DVCC from the same source. A maximum difference of 0.3 V between V(AVCC) and V(DVCC) can be tolerated during power up and operation.
(2) The minimum supply voltage is defined by the supervisor SVS levels when it is enabled. See the Table 5-14 threshold parameters for the exact values and further details.
(3) A capacitor tolerance of ±20% or better is required.

Copyright © 2015–2018, Texas Instruments Incorporated

Recommended Operating Conditions *(continued)*

			MIN	NOM	MAX	UNIT
f_{SYSTEM}	Processor frequency (maximum MCLK frequency)(4) (5) (see Figure 5-1)	PMMCOREVx = 0, 1.8 V ≤ V_{CC} ≤ 3.6 V (default condition)	0		8.0	MHz
		PMMCOREVx = 1, 2.0 V ≤ V_{CC} ≤ 3.6 V	0		12.0	
		PMMCOREVx = 2, 2.2 V ≤ V_{CC} ≤ 3.6 V	0		20.0	
		PMMCOREVx = 3, 2.4 V ≤ V_{CC} ≤ 3.6 V	0		25.0	
$I_{LOAD, DVCCD}$	Maximum load current that can be drawn from DVCC for core and IO ($I_{LOAD} = I_{CORE} + I_{IO}$)				20	mA
$I_{LOAD, AUX1D}$	Maximum load current that can be drawn from AUXVCC1 for core and IO ($I_{LOAD} = I_{CORE} + I_{IO}$)				20	mA
$I_{LOAD, AUX2D}$	Maximum load current that can be drawn from AUXVCC2 for core and IO ($I_{LOAD} = I_{CORE} + I_{IO}$)				20	mA
$I_{LOAD, AVCCA}$	Maximum load current that can be drawn from AVCC for analog modules ($I_{LOAD} = I_{Modules}$)				10	mA
$I_{LOAD, AUX1A}$	Maximum load current that can be drawn from AUXVCC1 for analog modules ($I_{LOAD} = I_{Modules}$)				5	mA
$I_{LOAD, AUX2A}$	Maximum load current that can be drawn from AUXVCC2 for analog modules ($I_{LOAD} = I_{Modules}$)				5	mA

(4) The MSP430 CPU is clocked directly with MCLK. Both the high and low phase of MCLK must not exceed the pulse width of the specified maximum frequency.
(5) Modules may have a different maximum input clock specification. Refer to the specification of the respective module in this data sheet.

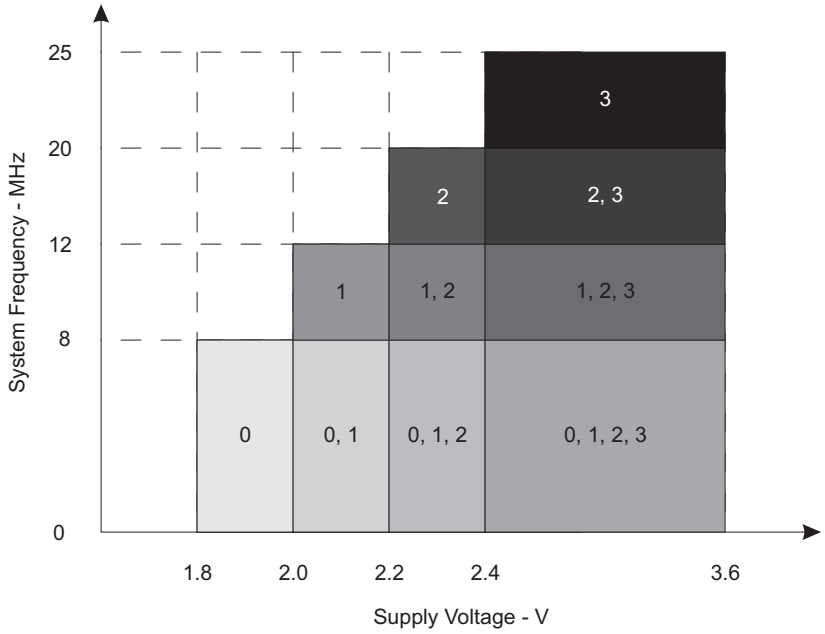

The numbers within the fields denote the supported PMMCOREVx settings.

Figure 5-1. Maximum System Frequency

5.4 Active Mode Supply Current Into V_{CC} Excluding External Current

over recommended operating free-air temperature (unless otherwise noted)(1) (2) (3)

PARAMETER	EXECUTION MEMORY	V_{CC}	PMMCOREVx	FREQUENCY ($f_{DCO} = f_{MCLK} = f_{SMCLK}$)										UNIT
				1 MHz		8 MHz		12 MHz		20 MHz		25 MHz		
				TYP	MAX	TYP	MAX	TYP	MAX	TYP	MAX	TYP	MAX	
$I_{AM, Flash}$ (4)	Flash	3.0 V	0	0.32	0.36	2.10	2.30							mA
			1	0.36		2.39		3.54	3.90					
			2	0.39		2.65		3.94		6.54	7.23			
			3	0.42		2.82		4.20		6.96		8.65	9.54	
$I_{AM, RAM}$ (5)	RAM	3.0 V	0	0.20	0.22	1.10	1.22							mA
			1	0.22		1.30		1.90	2.10					
			2	0.24		1.45		2.15		3.55	4.0			
			3	0.26		1.55		2.30		3.80		4.70	5.30	

(1) All inputs are tied to 0 or to V_{CC}. Outputs do not source or sink any current.
(2) The currents are characterized with a Micro Crystal MS1V-T1K crystal with a load capacitance of 12.5 pF. The internal and external load capacitance are chosen to closely match the required 12.5 pF.
(3) Characterized with program executing typical data processing.
f_{ACLK} = 32786 Hz, $f_{DCO} = f_{MCLK} = f_{SMCLK}$ at specified frequency.
XTS = CPUOFF = SCG0 = SCG1 = OSCOFF = SMCLKOFF = 0.
(4) Active mode supply current when program executes in flash at a nominal supply voltage of 3 V.
(5) Active mode supply current when program executes in RAM at a nominal supply voltage of 3 V.

Copyright © 2015–2018, Texas Instruments Incorporated

5.5 Low-Power Mode Supply Currents (Into V_{CC}) Excluding External Current

over recommended ranges of supply voltage and operating free-air temperature (unless otherwise noted)(1) (2)

PARAMETER		V_{CC}	PMMCOREVx	TEMPERATURE (T_A)								UNIT
				–40°C		25°C		60°C		85°C		
				TYP	MAX	TYP	MAX	TYP	MAX	TYP	MAX	
$I_{LPM0,1MHz}$	Low-power mode 0(3) (4)	2.2 V	0	75		78	87	81		84	96	µA
		3.0 V	3	85		89	99	93		98	110	
I_{LPM2}	Low-power mode 2(5) (4)	2.2 V	0	5.9		6.2	9	6.9		9.4	17	µA
		3.0 V	3	6.9		7.4	10	8.4		11	19	
$I_{LPM3,XT1LF}$	Low-power mode 3, crystal mode(6) (4)	2.2 V	0	1.4		1.7		2.5		4.9		µA
			1	1.5		1.9		2.7		5.2		
			2	1.7		2.0		2.9		5.5		
$I_{LPM3,XT1LF}$	Low-power mode 3, crystal mode(6) (4)	3.0 V	0	2.2		2.5	3.1	3.3		5.5	12.7	µA
			1	2.3		2.7		3.5		5.8		
			2	2.5		2.9		3.7		6.1		
			3	2.5		2.9	3.5	3.7		6.1	14.0	
$I_{LPM3,VLO}$	Low-power mode 3, VLO mode(7) (4)	3.0 V	0	1.4		1.7	2.2	2.4		4.5	11.5	µA
			1	1.5		1.8		2.5		4.7		
			2	1.6		1.9		2.7		4.9		
			3	1.6		1.9	2.4	2.7		5.0	12.7	
I_{LPM4}	Low-power mode 4(8) (4)	3.0 V	0	1.3		1.6	2.0	2.3		4.4	11.1	µA
			1	1.4		1.6		2.4		4.5		
			2	1.4		1.7		2.5		4.8		
			3	1.4		1.7	2.2	2.5		4.8	12.2	
$I_{LPM3.5}$	Low-power mode 3.5, RTC active on AUXVCC3(9)	2.2 V		0.65		0.80		0.90		1.30		µA
		3.0 V		1.16		1.24	2.05	1.43		1.87	2.71	
$I_{LPM4.5}$	Low-power mode 4.5(10)	3.0 V		0.70		0.78	1.05	0.90		1.20	1.85	µA

(1) All inputs are tied to 0 V or to V_{CC}. Outputs do not source or sink any current.
(2) The currents are characterized with a Micro Crystal MS1V-T1K crystal with a load capacitance of 12.5 pF. The internal and external load capacitance are chosen to closely match the required 12.5 pF.
(3) Current for watchdog timer clocked by SMCLK included. ACLK = low-frequency crystal operation (XTS = 0, XT1DRIVEx = 0).
CPUOFF = 1, SCG0 = 0, SCG1 = 0, OSCOFF = 0 (LPM0), f_{ACLK} = 32768 Hz, f_{MCLK} = 0 MHz, f_{SMCLK} = f_{DCO} = 1 MHz
(4) Current for brownout, high-side supervisor (SVS_H) normal mode included. Low-side supervisor (SVS_L) and low-side monitor (SVM_L) disabled. High-side monitor (SVM_H) disabled. RAM retention enabled.
(5) Current for watchdog timer clocked by ACLK and RTC clocked by XT1 included. ACLK = low-frequency crystal operation (XTS = 0, XT1DRIVEx = 0).
CPUOFF = 1, SCG0 = 0, SCG1 = 1, OSCOFF = 0 (LPM2), f_{ACLK} = 32768 Hz, f_{MCLK} = 0 MHz, f_{SMCLK} = f_{DCO} = 0 MHz, DCO setting = 1-MHz operation, DCO bias generator enabled.
(6) Current for watchdog timer clocked by ACLK and RTC clocked by XT1 included. ACLK = low-frequency crystal operation (XTS = 0, XT1DRIVEx = 0).
CPUOFF = 1, SCG0 = 1, SCG1 = 1, OSCOFF = 0 (LPM3), f_{ACLK} = 32768 Hz, f_{MCLK} = f_{SMCLK} = f_{DCO} = 0 MHz
(7) Current for watchdog timer clocked by ACLK included. RTC is disabled (RTCHOLD=1). ACLK = VLO.
CPUOFF = 1, SCG0 = 1, SCG1 = 1, OSCOFF = 0 (LPM3), f_{ACLK} = f_{VLO}, f_{MCLK} = f_{SMCLK} = f_{DCO} = 0 MHz
(8) CPUOFF = 1, SCG0 = 1, SCG1 = 1, OSCOFF = 1 (LPM4), f_{DCO} = f_{ACLK} = f_{MCLK} = f_{SMCLK} = 0 MHz
(9) f_{DCO} = f_{MCLK} = f_{SMCLK} = 0 MHz, f_{ACLK} = 32768 Hz, PMMREGOFF = 1, RTC active on AUXVCC3 supply
(10) f_{DCO} = f_{MCLK} = f_{SMCLK} = 0 MHz, f_{ACLK} = 0 Hz, PMMREGOFF = 1

Copyright © 2015–2018, Texas Instruments Incorporated

5.6 Low-Power Mode With LCD Supply Currents (Into V_{CC}) Excluding External Current

over recommended ranges of supply voltage and operating free-air temperature (unless otherwise noted)(1) (2)

PARAMETER		V_{CC}	PMMCOREVx	TEMPERATURE (T_A)								UNIT
				–40°C		25°C		60°C		85°C		
				TYP	MAX	TYP	MAX	TYP	MAX	TYP	MAX	
I_{LPM3} LCD, int. bias	Low-power mode 3 (LPM3) current, LCD 4-mux mode, internal biasing, charge pump disabled(3) (4)	2.2 V	0	2.4		2.9	3.6	3.8		5.8	12.2	µA
			1	2.5		3.1		4.0		6.0		
			2	2.6		3.3	3.9	4.2		6.3	13.4	
I_{LPM3} LCD, int. bias	Low-power mode 3 (LPM3) current, LCD 4-mux mode, internal biasing, charge pump disabled(3) (4)	3.0 V	0	2.8		3.2	3.9	4.1		6.4	13.3	µA
			1	2.9		3.4		4.3		6.7		
			2	3.1		3.6		4.5		7.0		
			3	3.1		3.6	4.5	4.5		7.0	14.7	
I_{LPM3} LCD,CP	Low-power mode 3 (LPM3) current, LCD 4-mux mode, internal biasing, charge pump enabled(3) (5)	2.2 V	0			3.8						µA
			1			3.9						
			2			4.0						
		3.0 V	0			4.0						
			1			4.1						
			2			4.2						
			3			4.2						

(1) All inputs are tied to 0 V or to V_{CC}. Outputs do not source or sink any current.
(2) The currents are characterized with a Micro Crystal MS1V-T1K crystal with a load capacitance of 12.5 pF. The internal and external load capacitance are chosen to closely match the required 12.5 pF.
(3) Current for watchdog timer clocked by ACLK and RTC clocked by XT1 included. ACLK = low-frequency crystal operation (XTS = 0, XT1DRIVEx = 0).
CPUOFF = 1, SCG0 = 1, SCG1 = 1, OSCOFF = 0 (LPM3), f_{ACLK} = 32768 Hz, $f_{MCLK} = f_{SMCLK} = f_{DCO}$ = 0 MHz
Current for brownout and high-side supervisor (SVS_H) normal mode included. Low-side supervisor (SVS_L) and low-side monitor (SVM_L) disabled. High-side monitor (SVM_H) disabled. RAM retention enabled.
(4) LCDMx = 11 (4-mux mode), LCDREXT = 0, LCDEXTBIAS = 0 (internal biasing), LCD2B = 0 (1/3 bias), LCDCPEN = 0 (charge pump disabled), LCDSSEL = 0, LCDPREx = 101, LCDDIVx = 00011 (f_{LCD} = 32768 Hz / 32 / 4 = 256 Hz)
Even segments S0, S2, ... = 0 and odd segments S1, S3, ... = 1. No LCD panel load.
(5) LCDMx = 11 (4-mux mode), LCDREXT = 0, LCDEXTBIAS = 0 (internal biasing), LCD2B = 0 (1/3 bias), LCDCPEN = 1 (charge pump enabled), VLCDx = 1000 (V_{LCD} = 3 V, typical), LCDSSEL = 0, LCDPREx = 101, LCDDIVx = 00011 (f_{LCD} = 32768 Hz / 32 / 4 = 256 Hz)
Even segments S0, S2, ... = 0 and odd segments S1, S3, ... = 1. No LCD panel load.

版权 © 2015–2018, Texas Instruments Incorporated

5.7 Thermal Resistance Characteristics

THERMAL METRIC[1] [2]			VALUE	UNIT
$R\theta_{JA}$	Junction-to-ambient thermal resistance, still air	LQFP 80 (PN)	46.3	°C/W
		LQFP 100 (PZ)	45.6	
$R\theta_{JC(TOP)}$	Junction-to-case (top) thermal resistance	LQFP 80 (PN)	11.5	°C/W
		LQFP 100 (PZ)	11.0	
$R\theta_{JC(BOTTOM)}$	Junction-to-case (bottom) thermal resistance	LQFP 80 (PN)	N/A[3]	°C/W
		LQFP 100 (PZ)	N/A	
$R\theta_{JB}$	Junction-to-board thermal resistance	LQFP 80 (PN)	21.9	°C/W
		LQFP 100 (PZ)	23.4	
Ψ_{JT}	Junction-to-package-top thermal characterization parameter	LQFP 80 (PN)	0.5	°C/W
		LQFP 100 (PZ)	0.4	
Ψ_{JB}	Junction-to-board thermal characterization parameter	LQFP 80 (PN)	21.6	°C/W
		LQFP 100 (PZ)	23.0	

(1) For more information about traditional and new thermal metrics, see *Semiconductor and IC Package Thermal Metrics*.
(2) These values are based on a JEDEC-defined 2S2P system (with the exception of the Theta JC [$R\theta_{JC}$] value, which is based on a JEDEC-defined 1S0P system) and will change based on environment as well as application. For more information, see these EIA/JEDEC standards:
- JESD51-2, *Integrated Circuits Thermal Test Method Environmental Conditions - Natural Convection (Still Air)*
- JESD51-3, *Low Effective Thermal Conductivity Test Board for Leaded Surface Mount Packages*
- JESD51-7, *High Effective Thermal Conductivity Test Board for Leaded Surface Mount Packages*
- JESD51-9, *Test Boards for Area Array Surface Mount Package Thermal Measurements*

(3) N/A = not applicable

5.8 Timing and Switching Characteristics

5.8.1 Power Supply Sequencing

TI recommends powering AVCC and DVCC pins from the same source. At a minimum, during power up, power down, and device operation, the voltage difference between AVCC and DVCC must not exceed the limits specified in *Absolute Maximum Ratings*. Exceeding the specified limits may cause malfunction of the device including erroneous writes to RAM and flash.

5.8.2 Reset Timing

Table 5-1 lists the device wake-up times.

Table 5-1. Wake-up Times From Low-Power Modes and Reset

over recommended ranges of supply voltage and operating free-air temperature (unless otherwise noted)

PARAMETER		TEST CONDITIONS		MIN	TYP	MAX	UNIT
$t_{WAKE-UP-FAST}$	Wake-up time from LPM2, LPM3, or LPM4 to active mode (1)	PMMCOREV = SVSMLRRL = n (where n = 0, 1, 2, or 3), SVSLFP = 1	$f_{MCLK} \geq 4$ MHz		3	5	µs
			1 MHz < f_{MCLK} < 4 MHz		4	6	
$t_{WAKE-UP-SLOW}$	Wake-up time from LPM2, LPM3, or LPM4 to active mode (2) (3)	PMMCOREV = SVSMLRRL = n (where n = 0, 1, 2, or 3), SVSLFP = 0			150	160	µs
$t_{WAKE-UP-LPM4.5}$	Wake-up time from LPM4.5 to active mode (4)				2	3	ms
$t_{WAKE-UP-RESET}$	Wake-up time from $\overline{RST}$ or BOR event to active mode (4)				2	3	ms

(1) This value represents the time from the wake-up event to the first active edge of MCLK. The wake-up time depends on the performance mode of the low-side supervisor (SVS_L) and low-side monitor (SVM_L). $t_{WAKE-UP-FAST}$ is possible with SVS_L and SVM_L in full performance mode or disabled. For specific register settings, see the *Low-Side SVS and SVM Control and Performance Mode Selection* section in the *Power Management Module and Supply Voltage Supervisor* chapter of the *MSP430x5xx and MSP430x6xx Family User's Guide*.
(2) This value represents the time from the wake-up event to the first active edge of MCLK. The wake-up time depends on the performance mode of the low-side supervisor (SVS_L) and low-side monitor (SVM_L). $t_{WAKE-UP-SLOW}$ is set with SVS_L and SVM_L in normal mode (low current mode). For specific register settings, see the *Low-Side SVS and SVM Control and Performance Mode Selection* section in the *Power Management Module and Supply Voltage Supervisor* chapter of the *MSP430x5xx and MSP430x6xx Family User's Guide*.
(3) The wake-up times from LPM0 and LPM1 to AM are not specified. They are proportional to MCLK cycle time but are not affected by the performance mode settings as for LPM2, LPM3, and LPM4.
(4) This value represents the time from the wake-up event to the reset vector execution.

版权 © 2015–2018, Texas Instruments Incorporated

5.8.3 Clock Specifications

Table 5-2 lists the characteristics of the crystal oscillator in low-frequency mode.

Table 5-2. Crystal Oscillator, XT1, Low-Frequency Mode(1)

over recommended ranges of supply voltage and operating free-air temperature (unless otherwise noted)

PARAMETER		TEST CONDITIONS	V_{CC}	MIN	TYP	MAX	UNIT
$\Delta I_{DVCC.LF}$	Differential XT1 oscillator crystal current consumption from lowest drive setting, LF mode	f_{OSC} = 32768 Hz, XTS = 0, XT1BYPASS = 0, XT1DRIVEx = 1, T_A = 25°C	3.0 V		0.075		µA
		f_{OSC} = 32768 Hz, XTS = 0, XT1BYPASS = 0, XT1DRIVEx = 2, T_A = 25°C			0.170		
		f_{OSC} = 32768 Hz, XTS = 0, XT1BYPASS = 0, XT1DRIVEx = 3, T_A = 25°C			0.290		
$f_{XT1,LF0}$	XT1 oscillator crystal frequency, LF mode	XTS = 0, XT1BYPASS = 0			32768		Hz
$f_{XT1,LF,SW}$	XT1 oscillator logic-level square-wave input frequency, LF mode	XTS = 0, XT1BYPASS = 1(2) (3)		10	32.768	50	kHz
OA_{LF}	Oscillation allowance for LF crystals(4)	XTS = 0, XT1BYPASS = 0, XT1DRIVEx = 0, $f_{XT1,LF}$ = 32768 Hz, $C_{L,eff}$ = 6 pF			210		kΩ
		XTS = 0, XT1BYPASS = 0, XT1DRIVEx = 1, $f_{XT1,LF}$ = 32768 Hz, $C_{L,eff}$ = 12 pF			300		
$C_{L,eff}$	Integrated effective load capacitance, LF mode(5)	XTS = 0, XCAPx = 0(6)			1		pF
		XTS = 0, XCAPx = 1			5.5		
		XTS = 0, XCAPx = 2			8.5		
		XTS = 0, XCAPx = 3			12.0		
	Duty cycle, LF mode	XTS = 0, Measured at ACLK, $f_{XT1,LF}$ = 32768 Hz		30%		70%	
$f_{Fault,LF}$	Oscillator fault frequency, LF mode(7)	XTS = 0(8)		10		10000	Hz
$t_{START,LF}$	Start-up time, LF mode	f_{OSC} = 32768 Hz, XTS = 0, XT1BYPASS = 0, XT1DRIVEx = 0, T_A = 25°C, $C_{L,eff}$ = 6 pF	3.0 V		1000		ms
		f_{OSC} = 32768 Hz, XTS = 0, XT1BYPASS = 0, XT1DRIVEx = 3, T_A = 25°C, $C_{L,eff}$ = 12 pF			500		

(1) To improve EMI on the XT1 oscillator, the following guidelines should be observed.
- Keep the trace between the device and the crystal as short as possible.
- Design a good ground plane around the oscillator pins.
- Prevent crosstalk from other clock or data lines into oscillator pins XIN and XOUT.
- Avoid running PCB traces underneath or adjacent to the XIN and XOUT pins.
- Use assembly materials and processes that avoid any parasitic load on the oscillator XIN and XOUT pins.
- If conformal coating is used, ensure that it does not induce capacitive or resistive leakage between the oscillator pins.

(2) When XT1BYPASS is set, XT1 circuits are automatically powered down. Input signal is a digital square wave with parametrics defined in the Schmitt-Trigger Inputs section of this data sheet.

(3) Maximum frequency of operation of the entire device cannot be exceeded.

(4) Oscillation allowance is based on a safety factor of 5 for recommended crystals. The oscillation allowance is a function of the XT1DRIVEx settings and the effective load. In general, comparable oscillator allowance can be achieved based on the following guidelines, but should be evaluated based on the actual crystal selected for the application:
- For XT1DRIVEx = 0, $C_{L,eff} \le 6$ pF
- For XT1DRIVEx = 1, 6 pF $\le C_{L,eff} \le$ 9 pF
- For XT1DRIVEx = 2, 6 pF $\le C_{L,eff} \le$ 10 pF
- For XT1DRIVEx = 3, $C_{L,eff} \ge 6$ pF

(5) Includes parasitic bond and package capacitance (approximately 2 pF per pin).
Because the PCB adds additional capacitance, TI recommends verifying the correct load by measuring the ACLK frequency. For a correct setup, the effective load capacitance should always match the specification of the used crystal.

(6) Requires external capacitors at both terminals. Values are specified by crystal manufacturers.

(7) Frequencies below the MIN specification set the fault flag. Frequencies above the MAX specification do not set the fault flag. Frequencies in between might set the flag.

(8) Measured with logic-level input frequency but also applies to operation with crystals.

Copyright © 2015–2018, Texas Instruments Incorporated

Table 5-3 lists the characteristics of the VLO.

Table 5-3. Internal Very-Low-Power Low-Frequency Oscillator (VLO)

over recommended ranges of supply voltage and operating free-air temperature (unless otherwise noted)

PARAMETER		TEST CONDITIONS	V_{CC}	MIN	TYP	MAX	UNIT
f_{VLO}	VLO frequency	Measured at ACLK	1.8 V to 3.6 V	6	9.4	15	kHz
df_{VLO}/d_T	VLO frequency temperature drift	Measured at ACLK(1)	1.8 V to 3.6 V		0.5		%/°C
df_{VLO}/dV_{CC}	VLO frequency supply voltage drift	Measured at ACLK(2)	1.8 V to 3.6 V		4		%/V
	Duty cycle	Measured at ACLK	1.8 V to 3.6 V	30%		70%	

(1) Calculated using the box method: (MAX(–40°C to 85°C) – MIN(–40°C to 85°C)) / MIN(85°C – (–40°C))
(2) Calculated using the box method: (MAX(1.8 V to 3.6 V) – MIN(1.8 V to 3.6 V)) / MIN(1.8 V to 3.6 V) / (3.6 V – 1.8 V)

Table 5-4 lists the characteristics of the REFO.

Table 5-4. Internal Reference, Low-Frequency Oscillator (REFO)

over recommended ranges of supply voltage and operating free-air temperature (unless otherwise noted)

PARAMETER		TEST CONDITIONS	V_{CC}	MIN	TYP	MAX	UNIT
I_{REFO}	REFO oscillator current consumption	T_A = 25°C	1.8 V to 3.6 V		3		µA
f_{REFO}	REFO frequency calibrated	Measured at ACLK	1.8 V to 3.6 V		32768		Hz
	REFO absolute tolerance calibrated	Full temperature range	1.8 V to 3.6 V			±3.5%	
		T_A = 25°C	3 V			±1.5%	
df_{REFO}/d_T	REFO frequency temperature drift	Measured at ACLK(1)	1.8 V to 3.6 V		0.01		%/°C
df_{REFO}/dV_{CC}	REFO frequency supply voltage drift	Measured at ACLK(2)	1.8 V to 3.6 V		1.0		%/V
	Duty cycle	Measured at ACLK	1.8 V to 3.6 V	40%	50%	60%	
t_{START}	REFO start-up time	40%/60% duty cycle	1.8 V to 3.6 V		25		µs

(1) Calculated using the box method: (MAX(–40°C to 85°C) – MIN(–40°C to 85°C)) / MIN(85°C – (–40°C))
(2) Calculated using the box method: (MAX(1.8 V to 3.6 V) – MIN(1.8 V to 3.6 V)) / MIN(1.8 V to 3.6 V) / (3.6 V – 1.8 V)

Copyright © 2015–2018, Texas Instruments Incorporated

Table 5-5 lists the DCO frequencies.

Table 5-5. DCO Frequency

over recommended ranges of supply voltage and operating free-air temperature (unless otherwise noted) (see Figure 5-2)

PARAMETER		TEST CONDITIONS	MIN	TYP	MAX	UNIT
$f_{DCO(0,0)}$	DCO frequency (0, 0)(1)	DCORSELx = 0, DCOx = 0, MODx = 0	0.07		0.20	MHz
$f_{DCO(0,31)}$	DCO frequency (0, 31)(1)	DCORSELx = 0, DCOx = 31, MODx = 0	0.70		1.70	MHz
$f_{DCO(1,0)}$	DCO frequency (1, 0)(1)	DCORSELx = 1, DCOx = 0, MODx = 0	0.15		0.36	MHz
$f_{DCO(1,31)}$	DCO frequency (1, 31)(1)	DCORSELx = 1, DCOx = 31, MODx = 0	1.47		3.45	MHz
$f_{DCO(2,0)}$	DCO frequency (2, 0)(1)	DCORSELx = 2, DCOx = 0, MODx = 0	0.32		0.75	MHz
$f_{DCO(2,31)}$	DCO frequency (2, 31)(1)	DCORSELx = 2, DCOx = 31, MODx = 0	3.17		7.38	MHz
$f_{DCO(3,0)}$	DCO frequency (3, 0)(1)	DCORSELx = 3, DCOx = 0, MODx = 0	0.64		1.51	MHz
$f_{DCO(3,31)}$	DCO frequency (3, 31)(1)	DCORSELx = 3, DCOx = 31, MODx = 0	6.07		14.0	MHz
$f_{DCO(4,0)}$	DCO frequency (4, 0)(1)	DCORSELx = 4, DCOx = 0, MODx = 0	1.3		3.2	MHz
$f_{DCO(4,31)}$	DCO frequency (4, 31)(1)	DCORSELx = 4, DCOx = 31, MODx = 0	12.3		28.2	MHz
$f_{DCO(5,0)}$	DCO frequency (5, 0)(1)	DCORSELx = 5, DCOx = 0, MODx = 0	2.5		6.0	MHz
$f_{DCO(5,31)}$	DCO frequency (5, 31)(1)	DCORSELx = 5, DCOx = 31, MODx = 0	23.7		54.1	MHz
$f_{DCO(6,0)}$	DCO frequency (6, 0)(1)	DCORSELx = 6, DCOx = 0, MODx = 0	4.6		10.7	MHz
$f_{DCO(6,31)}$	DCO frequency (6, 31)(1)	DCORSELx = 6, DCOx = 31, MODx = 0	39.0		88.0	MHz
$f_{DCO(7,0)}$	DCO frequency (7, 0)(1)	DCORSELx = 7, DCOx = 0, MODx = 0	8.5		19.6	MHz
$f_{DCO(7,31)}$	DCO frequency (7, 31)(1)	DCORSELx = 7, DCOx = 31, MODx = 0	60		135	MHz
$S_{DCORSEL}$	Frequency step between range DCORSEL and DCORSEL + 1	$S_{RSEL} = f_{DCO(DCORSEL+1,DCO)}/f_{DCO(DCORSEL,DCO)}$	1.2		2.3	ratio
S_{DCO}	Frequency step between tap DCO and DCO + 1	$S_{DCO} = f_{DCO(DCORSEL,DCO+1)}/f_{DCO(DCORSEL,DCO)}$	1.02		1.12	ratio
	Duty cycle	Measured at SMCLK	40%	50%	60%	
df_{DCO}/dT	DCO frequency temperature drift	f_{DCO} = 1 MHz		0.1		%/°C
df_{DCO}/dV_{CORE}	DCO frequency voltage drift	f_{DCO} = 1 MHz		1.9		%/V

(1) When selecting the proper DCO frequency range (DCORSELx), the target DCO frequency, f_{DCO}, should be set to reside within the range of $f_{DCO(n,\ 0),MAX} \le f_{DCO} \le f_{DCO(n,\ 31),MIN}$, where $f_{DCO(n,\ 0),MAX}$ represents the maximum frequency specified for the DCO frequency, range n, tap 0 (DCOx = 0) and $f_{DCO(n,31),MIN}$ represents the minimum frequency specified for the DCO frequency, range n, tap 31 (DCOx = 31). This ensures that the target DCO frequency resides within the range selected. It should also be noted that if the actual f_{DCO}frequency for the selected range causes the FLL or the application to select tap 0 or 31, the DCO fault flag is set to report that the selected range is at its minimum or maximum tap setting.

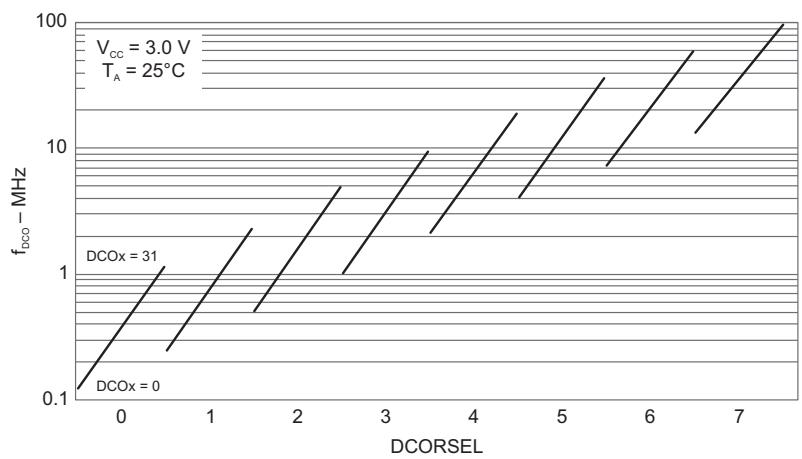

Figure 5-2. Typical DCO Frequency

5.8.4 Digital I/O Ports

Table 5-6 lists the characteristics of the GPIOs.

Table 5-6. Schmitt-Trigger Inputs, General-Purpose I/O

over recommended ranges of supply voltage and operating free-air temperature (unless otherwise noted)

PARAMETER		TEST CONDITIONS	V_{CC}	MIN	TYP	MAX	UNIT
V_{IT+}	Positive-going input threshold voltage		1.8 V	0.80		1.40	V
			3 V	1.50		2.10	
V_{IT-}	Negative-going input threshold voltage		1.8 V	0.45		1.00	V
			3 V	0.75		1.65	
V_{hys}	Input voltage hysteresis ($V_{IT+} - V_{IT-}$)		1.8 V	0.3		0.85	V
			3 V	0.4		1.0	
R_{Pull}	Pullup or pulldown resistor(1)	For pullup: $V_{IN} = V_{SS}$ For pulldown: $V_{IN} = V_{CC}$		20	35	50	kΩ
C_I	Input capacitance	$V_{IN} = V_{SS}$ or V_{CC}			5		pF

(1) Also applies to $\overline{RST}$ pin when pullup or pulldown resistor is enabled.

Table 5-7 lists the characteristics of the P1 and P2 inputs.

Table 5-7. Inputs, Ports P1 and P2(1)

over recommended ranges of supply voltage and operating free-air temperature (unless otherwise noted)

PARAMETER		TEST CONDITIONS	V_{CC}	MIN	MAX	UNIT
$t_{(int)}$	External interrupt timing(2)	Port P1, P2: P1.x to P2.x, External trigger pulse duration to set interrupt flag	2.2 V, 3 V	20		ns

(1) Some devices may contain additional ports with interrupts. See the block diagram and terminal function descriptions.
(2) An external signal sets the interrupt flag every time the minimum interrupt pulse duration $t_{(int)}$ is met. It might be set by trigger signals shorter than $t_{(int)}$.

Table 5-8 lists the leakage currents of the GPIOs.

Table 5-8. Leakage Current, General-Purpose I/O

over recommended ranges of supply voltage and operating free-air temperature (unless otherwise noted)

PARAMETER		TEST CONDITIONS	V_{CC}	MIN	MAX	UNIT
$I_{lkg(Px.y)}$	High-impedance leakage current	See (1) (2)	1.8 V, 3 V		±50	nA

(1) The leakage current is measured with V_{SS}or V_{CC} applied to the corresponding pins, unless otherwise noted.
(2) The leakage of the digital port pins is measured individually. The port pin is selected for input and the pullup or pulldown resistor is disabled.

Copyright © 2015–2018, Texas Instruments Incorporated

Table 5-9 lists the output characteristics of the GPIOs in full drive strength mode. Also see Figure 5-3 through Figure 5-6.

Table 5-9. Outputs, General-Purpose I/O (Full Drive Strength)

over recommended ranges of supply voltage and operating free-air temperature (unless otherwise noted)

PARAMETER		TEST CONDITIONS	V_{CC}	MIN	MAX	UNIT
V_{OH}	High-level output voltage	$I_{(OHmax)}$ = –3 mA (1)	1.8 V	V_{CC} – 0.25	V_{CC}	V
		$I_{(OHmax)}$ = –10 mA (1)		V_{CC} – 0.60	V_{CC}	
		$I_{(OHmax)}$ = –5 mA (1)	3 V	V_{CC} – 0.25	V_{CC}	
		$I_{(OHmax)}$ = –15 mA (1)		V_{CC} – 0.60	V_{CC}	
V_{OL}	Low-level output voltage	$I_{(OLmax)}$ = 3 mA (2)	1.8 V	V_{SS}	V_{SS} + 0.25	V
		$I_{(OLmax)}$ = 10 mA (3)		V_{SS}	V_{SS} + 0.60	
		$I_{(OLmax)}$ = 5 mA (2)	3 V	V_{SS}	V_{SS} + 0.25	
		$I_{(OLmax)}$ = 15 mA (3)		V_{SS}	V_{SS} + 0.60	

(1) The maximum total current, $I_{(OHmax)}$, for all outputs combined should not exceed ±20 mA to hold the maximum voltage drop specified. See Section 5.3 for more details.
(2) The maximum total current, $I_{(OLmax)}$, for all outputs combined should not exceed ±48 mA to hold the maximum voltage drop specified.
(3) The maximum total current, $I_{(OLmax)}$, for all outputs combined should not exceed ±100 mA to hold the maximum voltage drop specified.

5.8.4.1 Typical Characteristics, General-Purpose I/O (Full Drive Strength)

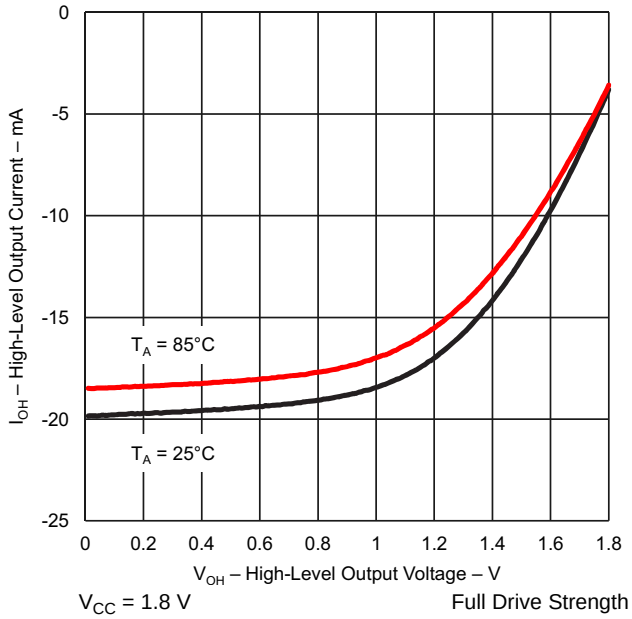

Figure 5-3. High-Level Output Current vs High-Level Output Voltage

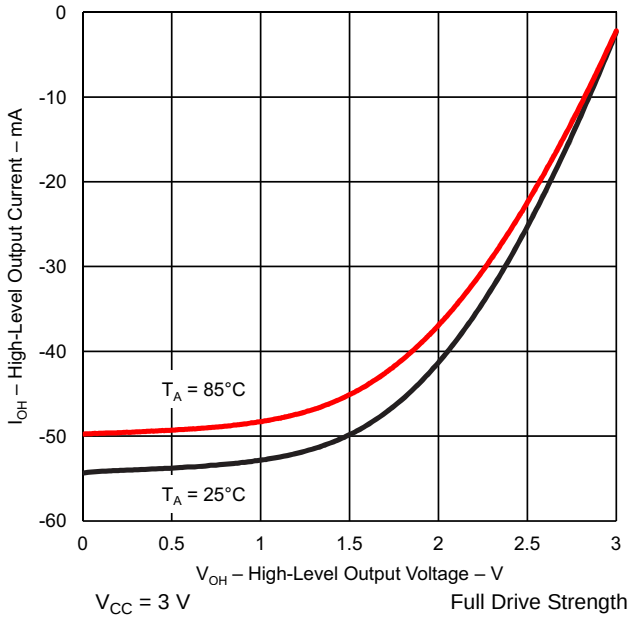

Figure 5-4. High-Level Output Current vs High-Level Output Voltage

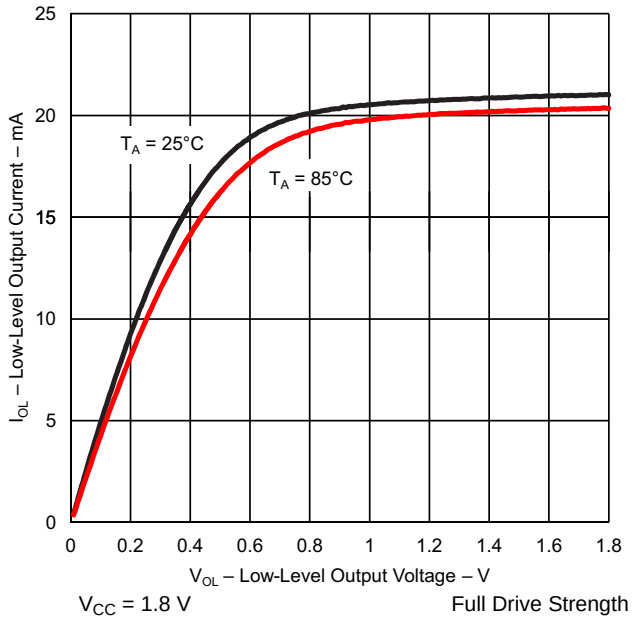

Figure 5-5. Low-Level Output Current vs Low-Level Output Voltage

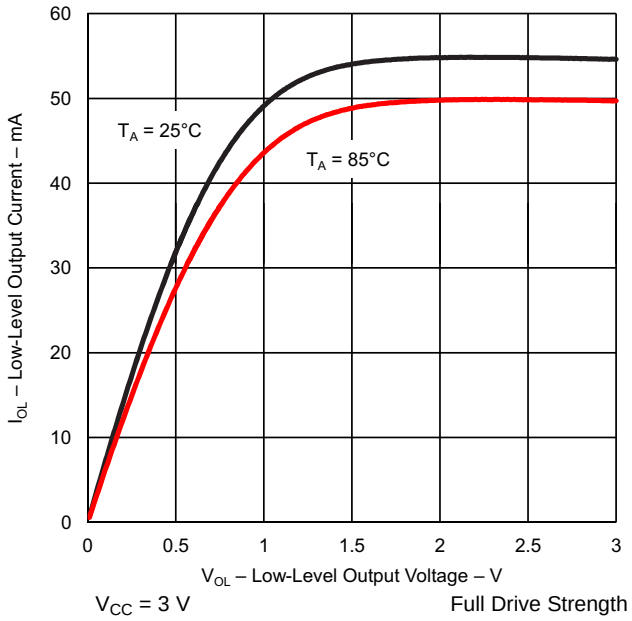

Figure 5-6. Low-Level Output Current vs Low-Level Output Voltage

Copyright © 2015–2018, Texas Instruments Incorporated

Table 5-10 lists the output characteristics of the GPIOs in reduced drive strength mode. Also see Figure 5-7 through Figure 5-10.

Table 5-10. Outputs, General-Purpose I/O (Reduced Drive Strength)

over recommended ranges of supply voltage and operating free-air temperature (unless otherwise noted)(1)

PARAMETER		TEST CONDITIONS	V_{CC}	MIN	MAX	UNIT
V_{OH}	High-level output voltage	$I_{(OHmax)}$ = –1 mA(2)	1.8 V	V_{CC} – 0.25	V_{CC}	V
		$I_{(OHmax)}$ = –3 mA(2)		V_{CC} – 0.60	V_{CC}	
		$I_{(OHmax)}$ = –2 mA(2)	3.0 V	V_{CC} – 0.25	V_{CC}	
		$I_{(OHmax)}$ = –6 mA(2)		V_{CC} – 0.60	V_{CC}	
V_{OL}	Low-level output voltage	$I_{(OLmax)}$ = 1 mA(3)	1.8 V	V_{SS}	V_{SS} + 0.25	V
		$I_{(OLmax)}$ = 3 mA(4)		V_{SS}	V_{SS} + 0.60	
		$I_{(OLmax)}$ = 2 mA(3)	3.0 V	V_{SS}	V_{SS} + 0.25	
		$I_{(OLmax)}$ = 6 mA(4)		V_{SS}	V_{SS} + 0.60	

(1) Selecting reduced drive strength may reduce EMI.
(2) The maximum total current, $I_{(OHmax)}$, for all outputs combined should not exceed ±20 mA to hold the maximum voltage drop specified. See Section 5.3 for more details.
(3) The maximum total current, $I_{(OLmax)}$, for all outputs combined, should not exceed ±48 mA to hold the maximum voltage drop specified.
(4) The maximum total current, $I_{(OLmax)}$, for all outputs combined, should not exceed ±100 mA to hold the maximum voltage drop specified.

5.8.4.2 Typical Characteristics, General-Purpose I/O (Reduced Drive Strength)

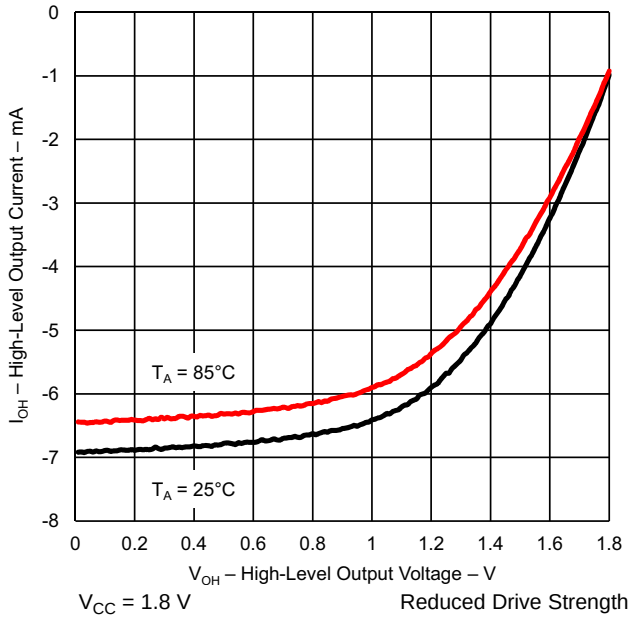

Figure 5-7. High-Level Output Current vs High-Level Output Voltage

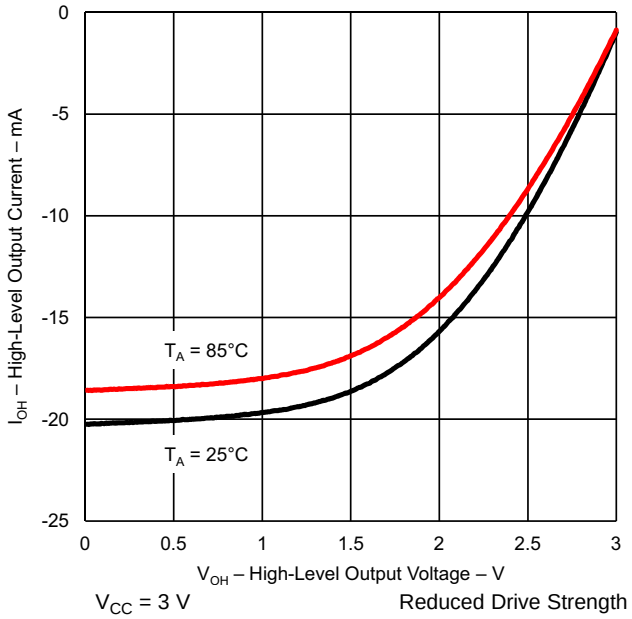

Figure 5-8. High-Level Output Current vs High-Level Output Voltage

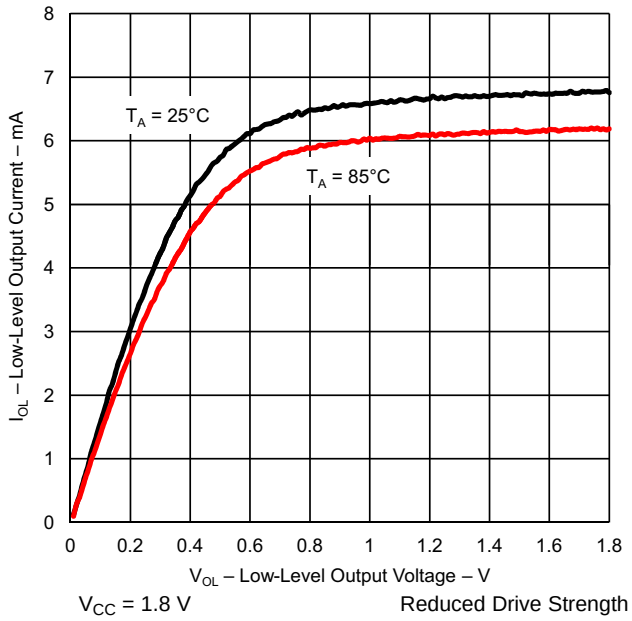

Figure 5-9. Low-Level Output Current vs Low-Level Output Voltage

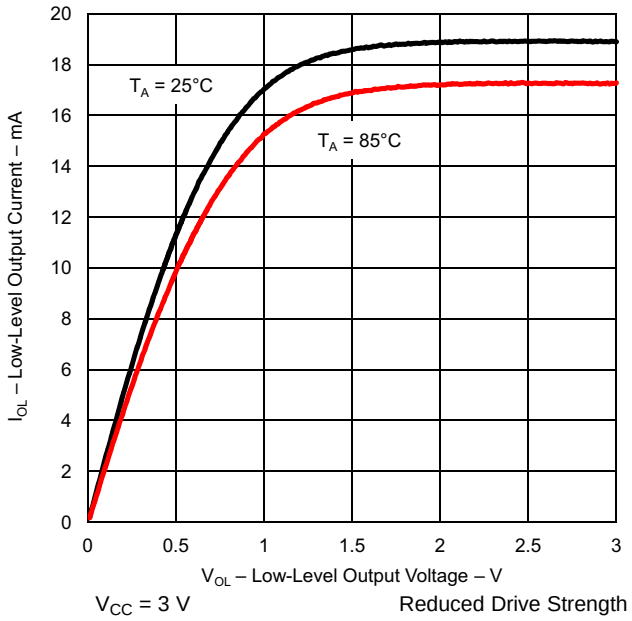

Figure 5-10. Low-Level Output Current vs Low-Level Output Voltage

Copyright © 2015–2018, Texas Instruments Incorporated

Table 5-11 lists the output frequencies of the GPIOs.

Table 5-11. Output Frequency, General-Purpose I/O

over recommended ranges of supply voltage and operating free-air temperature (unless otherwise noted)

PARAMETER		TEST CONDITIONS		MIN	MAX	UNIT
$f_{Px.y}$	Port output frequency (with load)	See[1] [2]	V_{CC} = 1.8 V, PMMCOREVx = 0		16	MHz
			V_{CC} = 3 V, PMMCOREVx = 3		25	
f_{Port_CLK}	Clock output frequency	ACLK, SMCLK, MCLK, C_L = 20 pF[2]	V_{CC} = 1.8 V, PMMCOREVx = 0		16	MHz
			V_{CC} = 3 V, PMMCOREVx = 3		25	

(1) A resistive divider with 2 × R1 between V_{CC} and V_{SS} is used as load. The output is connected to the center tap of the divider. For full drive strength, R1 = 550 Ω. For reduced drive strength, R1 = 1.6 kΩ. C_L = 20 pF is connected to the output to V_{SS}.
(2) The output voltage reaches at least 10% and 90% V_{CC} at the specified toggle frequency.

5.8.5 Power-Management Module (PMM)

Table 5-12 lists the characteristics of the BOR.

Table 5-12. PMM, Brownout Reset (BOR)

over recommended ranges of supply voltage and operating free-air temperature (unless otherwise noted)

PARAMETER		TEST CONDITIONS	MIN	TYP	MAX	UNIT
$V_{(DVCC_BOR_IT-)}$	BOR_H on voltage, DV_{CC} falling level	$\lvert dDV_{CC}/d_t \rvert < 3$ V/s			1.45	V
$V_{(DVCC_BOR_IT+)}$	BOR_H off voltage, DV_{CC} rising level	$\lvert dDV_{CC}/d_t \rvert < 3$ V/s	0.80	1.30	1.50	V
$V_{(DVCC_BOR_hys)}$	BOR_H hysteresis		50		250	mV
t_{RESET} (1)	Pulse duration required at $\overline{RST}$/NMI pin to accept a reset		2			µs

(1) Pulse shorter than 2 µs might trigger reset.

Table 5-13 lists the characteristics of the PMM core voltage.

Table 5-13. PMM, Core Voltage

over recommended ranges of supply voltage and operating free-air temperature (unless otherwise noted)

PARAMETER		TEST CONDITIONS	MIN	TYP	MAX	UNIT
V_{CORE3}(AM)	Core voltage, active mode, PMMCOREV = 3	2.4 V ≤ DV_{CC} ≤ 3.6 V		1.93		V
V_{CORE2}(AM)	Core voltage, active mode, PMMCOREV = 2	2.2 V ≤ DV_{CC} ≤ 3.6 V		1.83		V
V_{CORE1}(AM)	Core voltage, active mode, PMMCOREV = 1	2.0 V ≤ DV_{CC} ≤ 3.6 V		1.62		V
V_{CORE0}(AM)	Core voltage, active mode, PMMCOREV = 0	1.8 V ≤ DV_{CC} ≤ 3.6 V		1.42		V
V_{CORE3}(LPM)	Core voltage, low-current mode, PMMCOREV = 3	2.4 V ≤ DV_{CC} ≤ 3.6 V		1.96		V
V_{CORE2}(LPM)	Core voltage, low-current mode, PMMCOREV = 2	2.2 V ≤ DV_{CC} ≤ 3.6 V		1.94		V
V_{CORE1}(LPM)	Core voltage, low-current mode, PMMCOREV = 1	2.0 V ≤ DV_{CC} ≤ 3.6 V		1.74		V
V_{CORE0}(LPM)	Core voltage, low-current mode, PMMCOREV = 0	1.8 V ≤ DV_{CC} ≤ 3.6 V		1.54		V

Copyright © 2015–2018, Texas Instruments Incorporated

Table 5-14 lists the characteristics of the high-side SVS.

Table 5-14. PMM, SVS High Side

over recommended ranges of supply voltage and operating free-air temperature (unless otherwise noted)

PARAMETER		TEST CONDITIONS	MIN	TYP	MAX	UNIT
$I_{(SVSH)}$	SVS current consumption	SVSHE = 0, DV_{CC} = 3.6 V		0		nA
		SVSHE = 1, DV_{CC} = 3.6 V, SVSHFP = 0		200		
		SVSHE = 1, DV_{CC} = 3.6 V, SVSHFP = 1		1.5		µA
$V_{(SVSH_IT-)}$	SVS_H on voltage level(1)	SVSHE = 1, SVSHRVL = 0	1.60	1.65	1.70	V
		SVSHE = 1, SVSHRVL = 1	1.77	1.84	1.90	
		SVSHE = 1, SVSHRVL = 2	1.97	2.04	2.10	
		SVSHE = 1, SVSHRVL = 3	2.09	2.16	2.23	
$V_{(SVSH_IT+)}$	SVS_H off voltage level(1)	SVSHE = 1, SVSMHRRL = 0	1.68	1.74	1.80	V
		SVSHE = 1, SVSMHRRL = 1	1.89	1.95	2.01	
		SVSHE = 1, SVSMHRRL = 2	2.08	2.14	2.21	
		SVSHE = 1, SVSMHRRL = 3	2.21	2.27	2.34	
		SVSHE = 1, SVSMHRRL = 4	2.35	2.41	2.49	
		SVSHE = 1, SVSMHRRL = 5	2.65	2.72	2.80	
		SVSHE = 1, SVSMHRRL = 6	2.96	3.04	3.13	
		SVSHE = 1, SVSMHRRL = 7	2.96	3.04	3.13	
$t_{pd(SVSH)}$	SVS_H propagation delay	SVSHE = 1, dV_{DVCC}/dt = 10 mV/µs, SVSHFP = 1		2.5		µs
		SVSHE = 1, dV_{DVCC}/dt = 1 mV/µs, SVSHFP = 0		20		
$t_{(SVSH)}$	SVS_H on or off delay time	SVSHE = 0 → 1, SVSHFP = 1		12.5		µs
		SVSHE = 0 → 1, SVSHFP = 0		100		
dV_{DVCC}/dt	DV_{CC} rise time		0		1000	V/s

(1) The SVS_H settings available depend on the VCORE (PMMCOREVx) setting. Please refer to the *Power Management Module and Supply Voltage Supervisor* chapter in the *MSP430x5xx and MSP430x6xx Family User's Guide* on recommended settings and use.

Table 5-15 lists the characteristics of the high-side SVM.

Table 5-15. PMM, SVM High Side

over recommended ranges of supply voltage and operating free-air temperature (unless otherwise noted)

PARAMETER		TEST CONDITIONS	MIN	TYP	MAX	UNIT
$I_{(SVMH)}$	SVM_H current consumption	SVMHE = 0, DV_{CC} = 3.6 V		0		nA
		SVMHE = 1, DV_{CC} = 3.6 V, SVMHFP = 0		200		
		SVMHE = 1, DV_{CC} = 3.6 V, SVMHFP = 1		1.5		µA
$V_{(SVMH)}$	SVM_H on or off voltage level(1)	SVMHE = 1, SVSMHRRL = 0	1.68	1.74	1.80	V
		SVMHE = 1, SVSMHRRL = 1	1.89	1.95	2.01	
		SVMHE = 1, SVSMHRRL = 2	2.08	2.14	2.21	
		SVMHE = 1, SVSMHRRL = 3	2.21	2.27	2.34	
		SVMHE = 1, SVSMHRRL = 4	2.35	2.41	2.49	
		SVMHE = 1, SVSMHRRL = 5	2.65	2.72	2.80	
		SVMHE = 1, SVSMHRRL = 6	2.96	3.04	3.13	
		SVMHE = 1, SVSMHRRL = 7	2.96	3.04	3.13	
		SVMHE = 1, SVMHOVPE = 1		3.79		
$t_{pd(SVMH)}$	SVM_H propagation delay	SVMHE = 1, dV_{DVCC}/dt = 10 mV/µs, SVMHFP = 1		2.5		µs
		SVMHE = 1, dV_{DVCC}/dt = 1 mV/µs, SVMHFP = 0		20		
$t_{(SVMH)}$	SVM_H on or off delay time	SVMHE = 0 → 1, SVMHFP = 1		12.5		µs
		SVMHE = 0 → 1, SVMHFP = 0		100		

(1) The SVM_H settings available depend on the VCORE (PMMCOREVx) setting. Refer to the *Power Management Module and Supply Voltage Supervisor* chapter in the *MSP430x5xx and MSP430x6xx Family User's Guide* on recommended settings and use.

Copyright © 2015–2018, Texas Instruments Incorporated

Table 5-16 lists the characteristics of the low-side SVS.

Table 5-16. PMM, SVS Low Side

over recommended ranges of supply voltage and operating free-air temperature (unless otherwise noted)

PARAMETER		TEST CONDITIONS	MIN	TYP	MAX	UNIT
$I_{(SVSL)}$	SVS_L current consumption	SVSLE = 0, PMMCOREV = 2		0		nA
		SVSLE = 1, PMMCOREV = 2, SVSLFP = 0		200		
		SVSLE = 1, PMMCOREV = 2, SVSLFP = 1		1.5		µA
$t_{pd(SVSL)}$	SVS_L propagation delay	SVSLE = 1, dV_{CORE}/dt = 10 mV/µs, SVSLFP = 1		2.5		µs
		SVSLE = 1, dV_{CORE}/dt = 1 mV/µs, SVSLFP = 0		20		
$t_{(SVSL)}$	SVS_L on or off delay time	SVSLE = 0 → 1, SVSLFP = 1		12.5		µs
		SVSLE = 0 → 1, SVSLFP = 0		100		

Table 5-17 lists the characteristics of the low-side SVM.

Table 5-17. PMM, SVM Low Side

over recommended ranges of supply voltage and operating free-air temperature (unless otherwise noted)

PARAMETER		TEST CONDITIONS	MIN	TYP	MAX	UNIT
$I_{(SVML)}$	SVM_L current consumption	SVMLE = 0, PMMCOREV = 2		0		nA
		SVMLE = 1, PMMCOREV = 2, SVMLFP = 0		200		
		SVMLE = 1, PMMCOREV = 2, SVMLFP = 1		1.5		µA
$t_{pd(SVML)}$	SVM_L propagation delay	SVMLE = 1, dV_{CORE}/dt = 10 mV/µs, SVMLFP = 1		2.5		µs
		SVMLE = 1, dV_{CORE}/dt = 1 mV/µs, SVMLFP = 0		20		
$t_{(SVML)}$	SVM_L on or off delay time	SVMLE = 0 → 1, SVMLFP = 1		12.5		µs
		SVMLE = 0 → 1, SVMLFP = 0		100		

版权 © 2015–2018, Texas Instruments Incorporated

5.8.6 Auxiliary Supplies Module

Table 5-18 lists the recommended operating conditions of the auxiliary supplies.

Table 5-18. Auxiliary Supplies, Recommended Operating Conditions

over operating free-air temperature range (unless otherwise noted)

			MIN	NOM	MAX	UNIT
V_{CC}	Supply voltage for all supplies at pins DVCC, AVCC, AUX1, AUX2, AUX3		1.8		3.6	V
V_{DSYS}	Digital system supply voltage range, $V_{DSYS} = V_{CC} – R_{ON} × I_{LOAD}$	PMMCOREVx = 0	1.8		3.6	V
		PMMCOREVx = 1	2.0		3.6	
		PMMCOREVx = 2	2.2		3.6	
		PMMCOREVx = 3	2.4		3.6	
V_{ASYS}	Analog system supply voltage range, $V_{ASYS} = V_{CC} - R_{ON} × I_{LOAD}$		Refer to modules			V
C_{VCC}, $C_{AUX1/2}$	Recommended capacitor at pins DVCC, AVCC, AUX1, AUX2			4.7		µF
C_{VSYS}	Recommended capacitor at pins VDSYS and VASYS			4.7		µF
C_{VCORE}	Recommended capacitance at pin VCORE			0.47		µF
C_{AUX3}	Recommended capacitor at pin AUX3			0.47		µF

Table 5-19 lists the current consumption of AUX3.

Table 5-19. Auxiliary Supplies, AUX3 (Backup Subsystem) Currents

over operating free-air temperature range (unless otherwise noted)

PARAMETER		TEST CONDITIONS	V_{CC}	T_A	MIN	MAX	UNIT
$I_{AUX3,RTCon}$	AUX3 current with RTC enabled	RTC and 32-kHz oscillator in backup subsystem enabled	3 V	25°C		0.83	µA
				85°C		0.95	
$I_{AUX3,RTCoff}$	AUX3 current with RTC disabled	RTC and 32-kHz oscillator in backup subsystem disabled	3 V	25°C		110	nA
				85°C		165	

Table 5-20 lists the characteristics of the auxiliary supply monitor.

Table 5-20. Auxiliary Supplies, Auxiliary Supply Monitor

over operating free-air temperature range (unless otherwise noted)

PARAMETER		TEST CONDITIONS	V_{CC}	MIN	TYP	MAX	UNIT
$I_{CC,Monitor}$	Average supply current for monitoring circuitry drawn from VDSYS (also see Figure 5-11)	LOCKAUX = 0, AUXMRx = 0, AUX0MD = 0, AUX1MD = 0, AUX2MD = 1, VDSYS = DVCC, VASYS = AVCC, Current measured at VDSYS pin	3 V			0.70	µA
$I_{Meas,Monitor}$	Average current drawn from monitored supply during measurement cycle (also see Figure 5-12)	LOCKAUX = 0, AUXMRx = 0, AUX0MD = 0, AUX1MD = 0, AUX2MD = 1, VDSYS = DVCC, VASYS = AVCC, AUXVCC1 = 3 V, Current measured at AUXVCC1 pin				0.11	µA
$V_{Monitor}$	Auxiliary supply threshold level	AUXLVLx = 0		1.67	1.74	1.80	V
		AUXLVLx = 1		1.87	1.95	2.01	
		AUXLVLx = 2		2.06	2.14	2.21	
		AUXLVLx = 3		2.19	2.27	2.33	
		AUXLVLx = 4		2.33	2.41	2.48	
		AUXLVLx = 5		2.63	2.72	2.79	
		AUXLVLx = 6		2.91	3.02	3.10	
		AUXLVLx = 7		2.91	3.02	3.10	

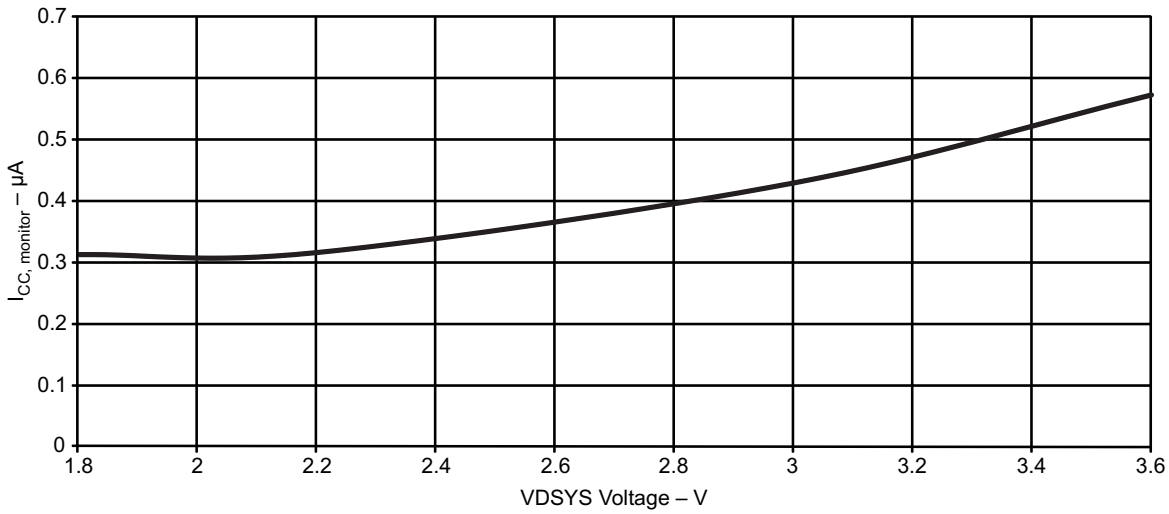

Figure 5-11. VDSYS Voltage vs $I_{CC,Monitor}$

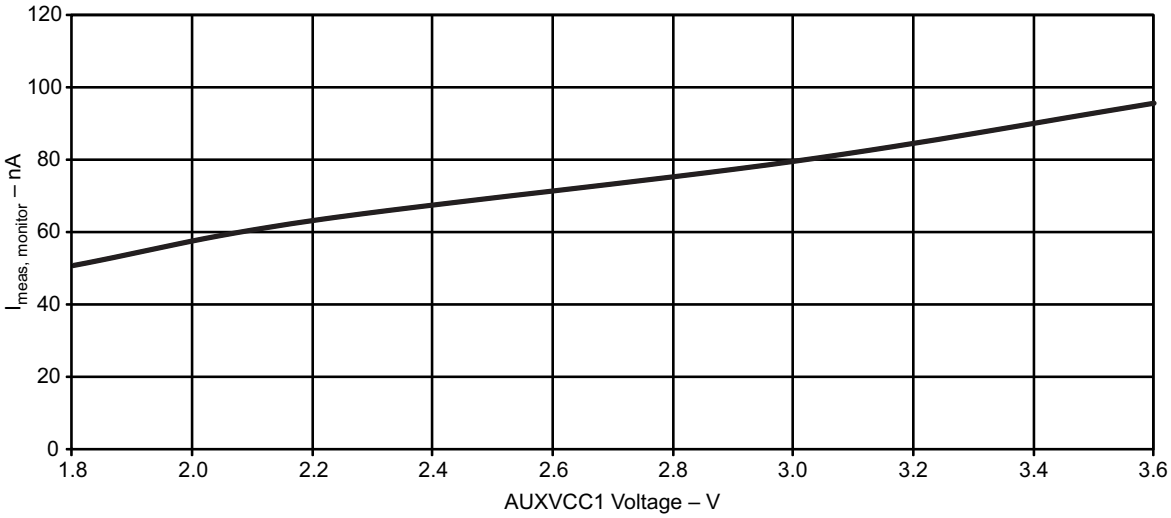

Figure 5-12. AUXVCC1 Voltage vs $I_{Meas,Monitor}$

Table 5-21 lists the AUX switch ON resistance characteristics.

Table 5-21. Auxiliary Supplies, Switch ON-Resistance

over operating free-air temperature range (unless otherwise noted)

PARAMETER		TEST CONDITIONS	MIN	MAX	UNIT
$R_{ON,DVCC}$	ON-resistance of switch between DVCC and VDSYS	$I_{LOAD} = I_{CORE} + I_{IO}$ = 10 mA + 10 mA = 20 mA		5	Ω
$R_{ON,DAUX1}$	ON-resistance of switch between AUX1 and VDSYS	$I_{LOAD} = I_{CORE} + I_{IO}$ = 10 mA + 10 mA = 20 mA		5	Ω
$R_{ON,DAUX2}$	ON-resistance of switch between AUX2 and VDSYS	$I_{LOAD} = I_{CORE} + I_{IO}$ = 10 mA + 10 mA = 20 mA		5	Ω
$R_{ON,AVCC}$	ON-resistance of switch between AVCC and V_{ASYS}	$I_{LOAD} = I_{Modules}$ = 10 mA		5	Ω
$R_{ON,AAUX1}$	ON-resistance of switch between AUX1 and V_{ASYS}	$I_{LOAD} = I_{Modules}$ = 5 mA		20	Ω
$R_{ON,AAUX2}$	ON-resistance of switch between AUX2 and V_{ASYS}	$I_{LOAD} = I_{Modules}$ = 5 mA		20	Ω

Copyright © 2015–2018, Texas Instruments Incorporated

Table 5-22 lists the switching times of the auxiliary supplies.

Table 5-22. Auxiliary Supplies, Switching Time

over operating free-air temperature range (unless otherwise noted)

PARAMETER		MIN	MAX	UNIT
t_{Switch}	Time from occurrence of trigger (SVM or software) to "new" supply connected to system supplies		100	ns
$t_{Recover}$	"Recovery time" after a switch over takes place; during this time, no further switching takes place	200	450	µs

Table 5-23 lists the leakage characteristics of the auxiliary supplies switch.

Table 5-23. Auxiliary Supplies, Switch Leakage

over operating free-air temperature range (unless otherwise noted)

PARAMETER		TEST CONDITIONS	MIN	TYP	MAX	UNIT
$I_{SW,Lkg}$	Current into DVCC, AVCC, AUX1 or AUX2 if not selected	Per supply (but not the highest supply)		50	100	nA
I_{Vmax}	Current drawn from highest supply			450	730	nA

Table 5-24 lists the characteristics of the auxiliary supplies to the ADC.

Table 5-24. Auxiliary Supplies, Auxiliary Supplies to ADC10_A

over operating free-air temperature range (unless otherwise noted)

PARAMETER		TEST CONDITIONS		V_{CC}	MIN	TYP	MAX	UNIT
V_3	Supply voltage divider $V_3 = V_{Supply} / 3$			1.8 V	0.58	0.60	0.62	V
				3.0 V	0.98	1.00	1.02	
				3.6 V	1.18	1.20	1.22	
R_{V3}	Load resistance	AUXADCRx = 0					18	kΩ
		AUXADCRx = 1					1.5	
		AUXADCRx = 2					0.6	
$t_{Sample,V3}$	Sampling time required if V_3 selected	AUXADC = 1, ADC10ON = 1, INCH = 0Ch, Error of conversion result ≤ 1 LSB	AUXADCRx = 0		1000			ns
			AUXADCRx = 1		1000			
			AUXADCRx = 2		1000			

Table 5-25 lists the characteristics of the charge-limiting resistor.

Table 5-25. Auxiliary Supplies, Charge-Limiting Resistor

over operating free-air temperature range (unless otherwise noted)

PARAMETER		TEST CONDITIONS	V_{CC}	MIN	TYP	MAX	UNIT
R_{CHARGE}	Charge limiting resistor	CHCx = 1	3 V			5	kΩ
		CHCx = 2	3 V			10	
		CHCx = 3	3 V			20	

5.8.7 Timer_A Module

Table 5-26 lists the characteristics of the Timer_A.

Table 5-26. Timer_A

over recommended ranges of supply voltage and operating free-air temperature (unless otherwise noted)

PARAMETER		TEST CONDITIONS	V_{CC}	MIN	TYP	MAX	UNIT
f_{TA}	Timer_A input clock frequency	Internal: SMCLK, ACLK External: TACLK Duty cycle = 50% ± 10%	1.8 V, 3 V			25	MHz
$t_{TA,cap}$	Timer_A capture timing	All capture inputs, Minimum pulse duration required for capture	1.8 V, 3 V	20			ns

5.8.8 eUSCI Module

Table 5-27 lists the supported clock frequencies of the eUSCI in UART mode.

Table 5-27. eUSCI (UART Mode) Clock Frequency

PARAMETER		TEST CONDITIONS	MIN	MAX	UNIT
f_{eUSCI}	eUSCI input clock frequency	Internal: SMCLK or ACLK, External: UCLK, Duty cycle = 50% ±10%		f_{SYSTEM}	MHz
f_{BITCLK}	BITCLK clock frequency (equals baud rate in MBaud)			5	MHz

Table 5-28 lists the switching characteristics of the eUSCI in UART mode.

Table 5-28. eUSCI (UART Mode) Switching Characteristics

over recommended ranges of supply voltage and operating free-air temperature (unless otherwise noted)

PARAMETER		TEST CONDITIONS	V_{CC}	MIN	TYP	MAX	UNIT
t_t	UART receive deglitch time(1)	UCGLITx = 0	2 V, 3 V	10	15	25	ns
		UCGLITx = 1		30	50	85	
		UCGLITx = 2		50	80	150	
		UCGLITx = 3		70	120	200	

(1) Pulses on the UART receive input (UCxRX) shorter than the UART receive deglitch time are suppressed. To ensure that pulses are correctly recognized their width should exceed the maximum specification of the deglitch time.

Copyright © 2015–2018, Texas Instruments Incorporated

Table 5-29 lists the supported clock frequencies of the eUSCI in SPI master mode.

Table 5-29. eUSCI (SPI Master Mode) Clock Frequency

PARAMETER		TEST CONDITIONS	MIN	MAX	UNIT
f_{eUSCI}	eUSCI input clock frequency	Internal: SMCLK or ACLK, Duty cycle = 50% ±10%		f_{SYSTEM}	MHz

Table 5-30 lists the switching characteristics of the eUSCI in SPI master mode.

Table 5-30. eUSCI (SPI Master Mode) Switching Characteristics

over recommended ranges of supply voltage and operating free-air temperature (unless otherwise noted)(1)

PARAMETER		TEST CONDITIONS	V_{CC}	MIN	MAX	UNIT
$t_{STE,LEAD}$	STE lead time, STE active to clock	UCSTEM = 0, UCMODEx = 01 or 10	2 V, 3 V	150		ns
		UCSTEM = 1, UCMODEx = 01 or 10	2 V, 3 V	150		
$t_{STE,LAG}$	STE lag time, Last clock to STE inactive	UCSTEM = 0, UCMODEx = 01 or 10	2 V, 3 V	200		ns
		UCSTEM = 1, UCMODEx = 01 or 10	2 V, 3 V	200		
$t_{STE,ACC}$	STE access time, STE active to SIMO data out	UCSTEM = 0, UCMODEx = 01 or 10	2 V		50	ns
			3 V		30	
		UCSTEM = 1, UCMODEx = 01 or 10	2 V		50	
			3 V		30	
$t_{STE,DIS}$	STE disable time, STE inactive to SIMO high impedance	UCSTEM = 0, UCMODEx = 01 or 10	2 V		40	ns
			3 V		25	
		UCSTEM = 1, UCMODEx = 01 or 10	2 V		40	
			3 V		25	
$t_{SU,MI}$	SOMI input data setup time		2 V	50		ns
			3 V	30		
$t_{HD,MI}$	SOMI input data hold time		2 V	0		ns
			3 V	0		
$t_{VALID,MO}$	SIMO output data valid time(2)	UCLK edge to SIMO valid, C_L = 20 pF	2 V		9	ns
			3 V		5	
$t_{HD,MO}$	SIMO output data hold time(3)	C_L = 20 pF	2 V	0		ns
			3 V	0		

(1) $f_{UCxCLK} = 1/2t_{LO/HI}$ with $tL_{O/HI} = \max(t_{VALID,MO(eUSCI)} + t_{SU,SI(Slave)}, t_{SU,MI(eUSCI)} + t_{VALID,SO(Slave)})$
For the slave parameters $t_{SU,SI(Slave)}$ and $t_{VALID,SO(Slave)}$, see the SPI parameters of the attached slave.
(2) Specifies the time to drive the next valid data to the SIMO output after the output changing UCLK clock edge. See the timing diagrams in Figure 5-13 and Figure 5-14.
(3) Specifies how long data on the SIMO output is valid after the output changing UCLK clock edge. Negative values indicate that the data on the SIMO output can become invalid before the output changing clock edge observed on UCLK. See the timing diagrams in Figure 5-13 and Figure 5-14.

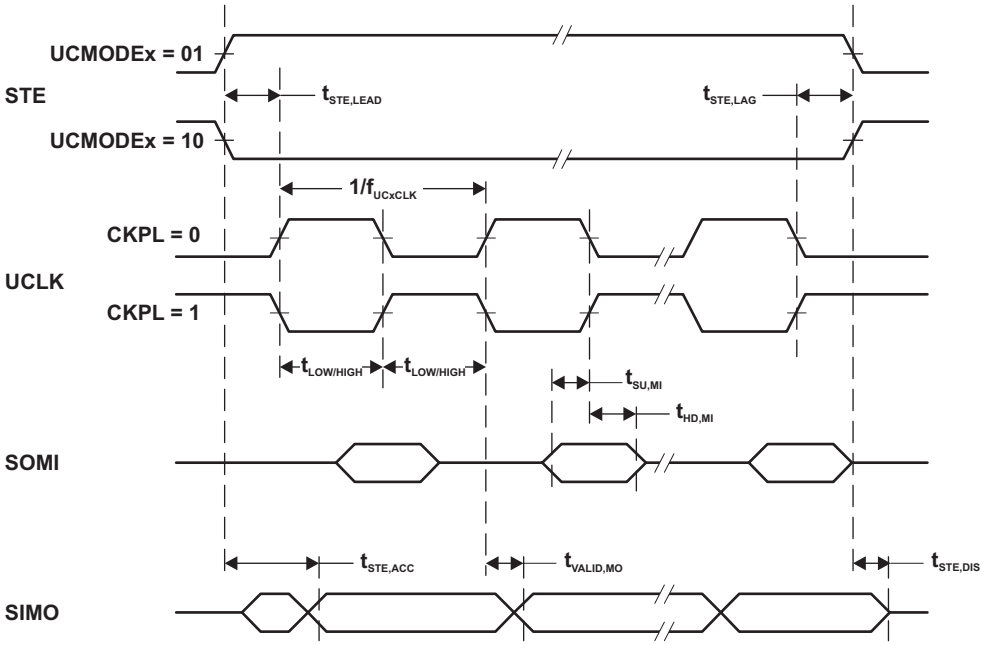

Figure 5-13. BadDriveBacuSPI Master Mode, CKPH = 0

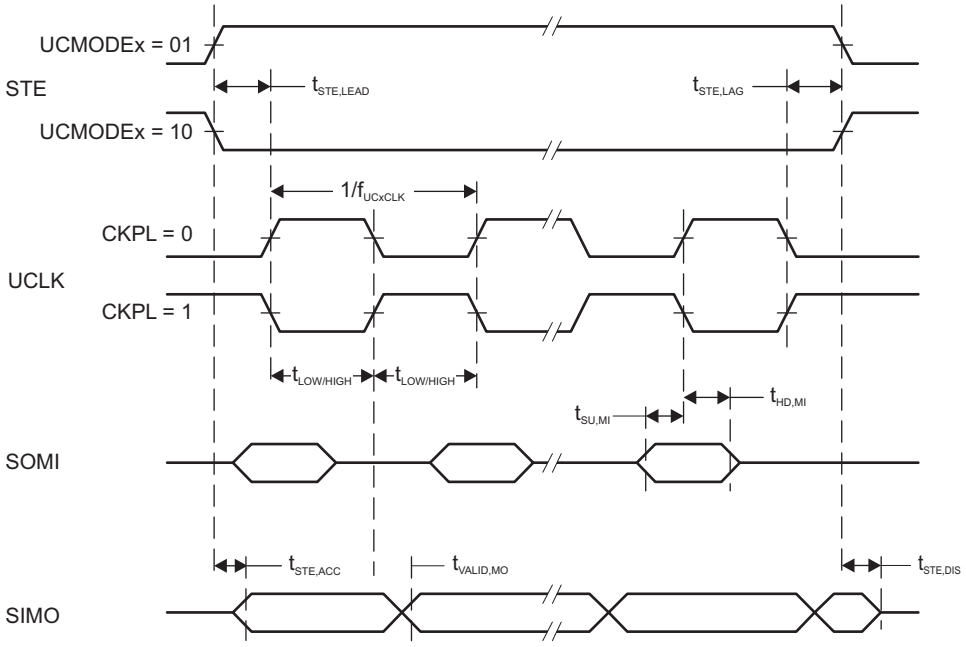

Figure 5-14. SPI Master Mode, CKPH = 1

Copyright © 2015–2018, Texas Instruments Incorporated

Table 5-31 lists the switching characteristics of the eUSCI in SPI slave mode.

Table 5-31. eUSCI (SPI Slave Mode)

over recommended ranges of supply voltage and operating free-air temperature (unless otherwise noted)(1)

PARAMETER		TEST CONDITIONS	V_{CC}	MIN	MAX	UNIT
$t_{STE,LEAD}$	STE lead time, STE active to clock		2.0 V	4		ns
			3.0 V	3		
$t_{STE,LAG}$	STE lag time, Last clock to STE inactive		2.0 V	0		ns
			3.0 V	0		
$t_{STE,ACC}$	STE access time, STE active to SOMI data out		2.0 V		46	ns
			3.0 V		24	
$t_{STE,DIS}$	STE disable time, STE inactive to SOMI high impedance		2.0 V		38	ns
			3.0 V		25	
$t_{SU,SI}$	SIMO input data setup time		2.0 V	2		ns
			3.0 V	1		
$t_{HD,SI}$	SIMO input data hold time		2.0 V	2		ns
			3.0 V	2		
$t_{VALID,SO}$	SOMI output data valid time(2)	UCLK edge to SOMI valid, C_L = 20 pF	2.0 V		55	ns
			3.0 V		32	
$t_{HD,SO}$	SOMI output data hold time(3)	C_L = 20 pF	2.0 V	24		ns
			3.0 V	16		

(1) $f_{UCxCLK} = 1/2t_{LO/HI}$ with $tL_{O/HI} = \max(t_{VALID,MO(Master)} + t_{SU,SI(eUSCI)}, t_{SU,MI(Master)} + t_{VALID,SO(eUSCI)})$
For the master parameters $t_{SU,MI(Master)}$ and $t_{VALID,MO(Master)}$, see the SPI parameters of the attached master.
(2) Specifies the time to drive the next valid data to the SOMI output after the output changing UCLK clock edge. Refer to the timing diagrams in Figure 5-13 and Figure 5-14.
(3) Specifies how long data on the SOMI output is valid after the output changing UCLK clock edge. Refer to the timing diagrams in Figure 5-15 and Figure 5-16.

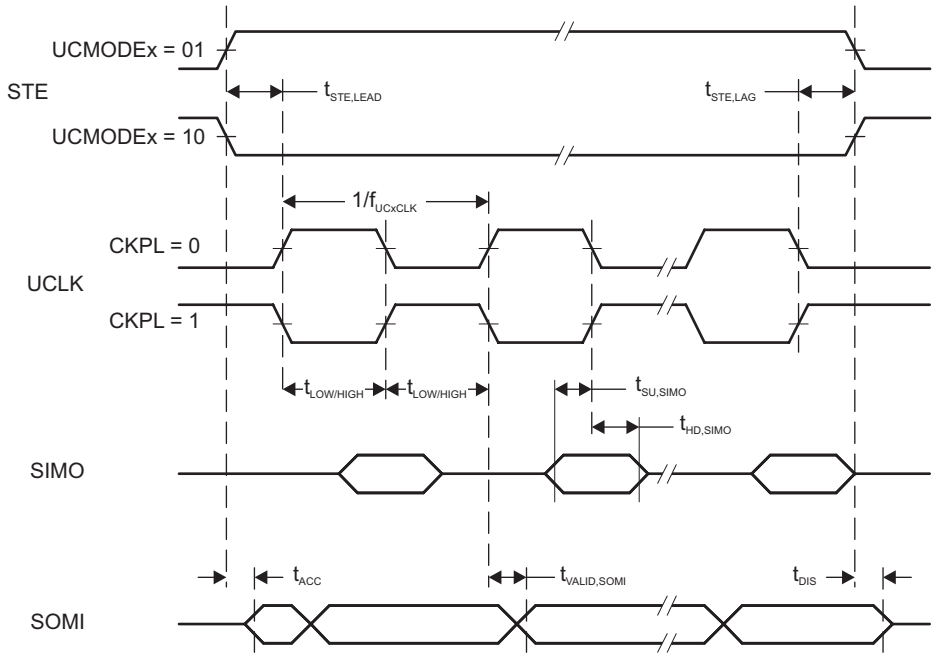

Figure 5-15. SPI Slave Mode, CKPH = 0

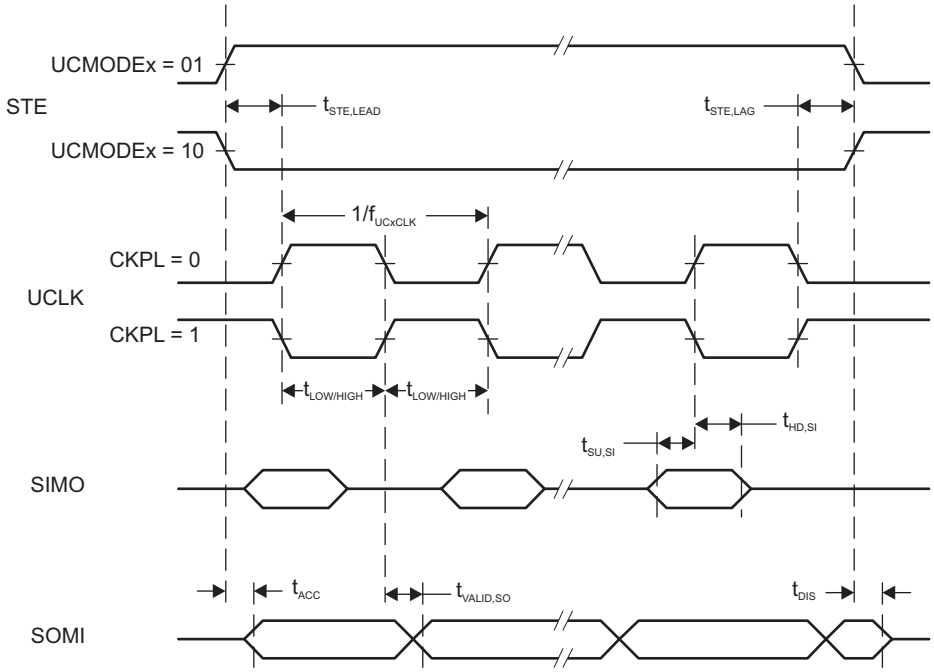

Figure 5-16. SPI Slave Mode, CKPH = 1

Copyright © 2015–2018, Texas Instruments Incorporated

Table 5-32 lists the characteristics of the eUSCI in I²C mode.

Table 5-32. eUSCI (I²C Mode)

over recommended ranges of supply voltage and operating free-air temperature (unless otherwise noted) (see Figure 5-17)

PARAMETER		TEST CONDITIONS	V_{CC}	MIN	TYP	MAX	UNIT
f_{eUSCI}	eUSCI input clock frequency	Internal: SMCLK, ACLK External: UCLK Duty cycle = 50% ±10%				f_{SYSTEM}	MHz
f_{SCL}	SCL clock frequency		2 V, 3 V	0		400	kHz
$t_{HD,STA}$	Hold time (repeated) START	f_{SCL} = 100 kHz	2 V, 3 V	5.1			µs
		f_{SCL} > 100 kHz		1.5			
$t_{SU,STA}$	Setup time for a repeated START	f_{SCL} = 100 kHz	2 V, 3 V	5.1			µs
		f_{SCL} > 100 kHz		1.4			
$t_{HD,DAT}$	Data hold time		2 V, 3 V	0.4			µs
$t_{SU,DAT}$	Data setup time	f_{SCL} = 100 kHz	2 V, 3 V	5.0			µs
		f_{SCL} > 100 kHz	2 V, 3 V	1.3			
$t_{SU,STO}$	Setup time for STOP	f_{SCL} = 100 kHz	2 V, 3 V	5.2			µs
		f_{SCL} > 100 kHz		1.7			
t_{SP}	Pulse duration of spikes suppressed by input filter	UCGLITx = 0	2 V, 3 V	75		220	ns
		UCGLITx = 1		35		120	
		UCGLITx = 2		30		60	
		UCGLITx = 3		20		35	
$t_{TIMEOUT}$	Clock low time-out	UCCLTOx = 1	2 V, 3 V		30		ms
		UCCLTOx = 2			33		
		UCCLTOx = 3			37		

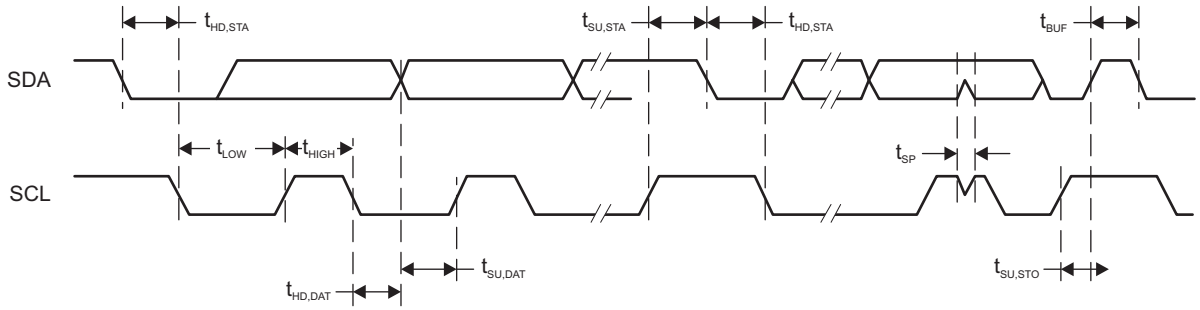

Figure 5-17. I²C Mode Timing

5.8.9 LCD Controller

Table 5-33 lists the operating conditions of the LCD.

Table 5-33. LCD_C Operating Conditions

PARAMETER		TEST CONDITIONS	MIN	NOM	MAX	UNIT
$V_{CC,LCD_C,CP\ en,3.6}$	Supply voltage range, charge pump enabled, $V_{LCD} \leq 3.6$ V	LCDCPEN = 1, 0000 < VLCDx ≤ 1111 (charge pump enabled, $V_{LCD} \leq 3.6$ V)	2.2		3.6	V
$V_{CC,LCD_C,CP\ en,3.3}$	Supply voltage range, charge pump enabled, $V_{LCD} \leq 3.3$ V	LCDCPEN = 1, 0000 < VLCDx ≤ 1100 (charge pump enabled, $V_{LCD} \leq 3.3$ V)	2.0		3.6	V
$V_{CC,LCD_C,int.\ bias}$	Supply voltage range, internal biasing, charge pump disabled	LCDCPEN = 0, VLCDEXT = 0	2.4		3.6	V
$V_{CC,LCD_C,ext.\ bias}$	Supply voltage range, external biasing, charge pump disabled	LCDCPEN = 0, VLCDEXT = 0	2.4		3.6	V
$V_{CC,LCD_C,VLCDEXT}$	Supply voltage range, external LCD voltage, internal or external biasing, charge pump disabled	LCDCPEN = 0, VLCDEXT = 1	2.0		3.6	V
$V_{LCDCAP/R33}$	External LCD voltage at LCDCAP/R33, internal or external biasing, charge pump disabled	LCDCPEN = 0, VLCDEXT = 1	2.4		3.6	V
C_{LCDCAP}	Capacitor on LCDCAP when charge pump enabled	LCDCPEN = 1, VLCDx > 0000 (charge pump enabled)		4.7	10	µF
f_{LCD}	LCD frequency range	$f_{FRAME} = 1/(2 \times mux) \times f_{LCD}$ with mux = 1 (static) to 8	0		1024	Hz
$f_{FRAME,4mux}$	LCD frame frequency range	$f_{FRAME,4mux}(MAX) = 1/(2 \times 4) \times f_{LCD}(MAX) = 1/(2 \times 4) \times 1024$ Hz			128	Hz
$f_{FRAME,8mux}$	LCD frame frequency range	$f_{FRAME,8mux}(MAX) = 1/(2 \times 4) \times f_{LCD}(MAX) = 1/(2 \times 8) \times 1024$ Hz			64	Hz
$f_{ACLK,in}$	ACLK input frequency range		30	32	40	kHz
C_{Panel}	Panel capacitance	100-Hz frame frequency			10000	pF
V_{R33}	Analog input voltage at R33	LCDCPEN = 0, VLCDEXT = 1	2.4		V_{CC} + 0.2	V
$V_{R23,1/3bias}$	Analog input voltage at R23	LCDREXT = 1, LCDEXTBIAS = 1, LCD2B = 0	V_{R13}	$V_{R03} + 2/3 \times (V_{R33} - V_{R03})$	V_{R33}	V
$V_{R13,1/3bias}$	Analog input voltage at R13 with 1/3 biasing	LCDREXT = 1, LCDEXTBIAS = 1, LCD2B = 0	V_{R03}	$V_{R03} + 1/3 \times (V_{R33} - V_{R03})$	V_{R23}	V
$V_{R13,1/2bias}$	Analog input voltage at R13 with 1/2 biasing	LCDREXT = 1, LCDEXTBIAS = 1, LCD2B = 1	V_{R03}	$V_{R03} + 1/2 \times (V_{R33} - V_{R03})$	V_{R33}	V
V_{R03}	Analog input voltage at R03	R0EXT = 1	V_{SS}			V
V_{LCD}-V_{R03}	Voltage difference between V_{LCD} and R03	LCDCPEN = 0, R0EXT = 1	2.4		V_{CC} + 0.2	V
$V_{LCDREF/R13}$	External LCD reference voltage applied at LCDREF/R13	VLCDREFx = 01	0.8	1.2	1.5	V

Copyright © 2015–2018, Texas Instruments Incorporated

Table 5-34 lists the characteristics of the LCD.

Table 5-34. LCD_C Electrical Characteristics

over operating free-air temperature range (unless otherwise noted)

PARAMETER		TEST CONDITIONS	V_{CC}	MIN	TYP	MAX	UNIT
V_{LCD}	LCD voltage	VLCDx = 0000, VLCDEXT = 0	2.4 V to 3.6 V		V_{CC}		V
		LCDCPEN = 1, VLCDx = 0001	2 V to 3.6 V		2.58		
		LCDCPEN = 1, VLCDx = 0010	2 V to 3.6 V		2.64		
		LCDCPEN = 1, VLCDx = 0011	2 V to 3.6 V		2.71		
		LCDCPEN = 1, VLCDx = 0100	2 V to 3.6 V		2.78		
		LCDCPEN = 1, VLCDx = 0101	2 V to 3.6 V		2.83		
		LCDCPEN = 1, VLCDx = 0110	2 V to 3.6 V		2.90		
		LCDCPEN = 1, VLCDx = 0111	2 V to 3.6 V		2.96		
		LCDCPEN = 1, VLCDx = 1000	2 V to 3.6 V		3.02		
		LCDCPEN = 1, VLCDx = 1001	2 V to 3.6 V		3.07		
		LCDCPEN = 1, VLCDx = 1010	2 V to 3.6 V		3.14		
		LCDCPEN = 1, VLCDx = 1011	2 V to 3.6 V		3.21		
		LCDCPEN = 1, VLCDx = 1100	2 V to 3.6 V		3.27		
		LCDCPEN = 1, VLCDx = 1101	2.2 V to 3.6 V		3.32		
		LCDCPEN = 1, VLCDx = 1110	2.2 V to 3.6 V		3.38		
		LCDCPEN = 1, VLCDx = 1111	2.2 V to 3.6 V		3.44	3.6	
$I_{CC,Peak,CP}$	Peak supply currents due to charge pump activities	LCDCPEN = 1, VLCDx = 1111	2.2 V		400		µA
$t_{LCD,CP,on}$	Time to charge C_{LCD} when discharged	C_{LCD} = 4.7µF, LCDCPEN = 0→1, VLCDx = 1111	2.2 V		150	500	ms
$I_{CP,Load}$	Maximum charge pump load current	LCDCPEN = 1, VLCDx = 1111	2.2 V	50			µA
$R_{LCD,Seg}$	LCD driver output impedance, segment lines	LCDCPEN = 1, VLCDx = 1000, I_{LOAD} = ±10 µA	2.2 V			10	kΩ
$R_{LCD,COM}$	LCD driver output impedance, common lines	LCDCPEN = 1, VLCDx = 1000, I_{LOAD} = ±10 µA	2.2 V			10	kΩ

5.8.10 SD24_B Module

Table 5-35 lists the power supply and recommended operating conditions of the SD24_B.

Table 5-35. SD24_B Power Supply and Recommended Operating Conditions

				MIN	TYP	MAX	UNIT
AV_{CC}	Analog supply voltage	$AV_{CC} = DV_{CC}$, $AV_{SS} = DV_{SS} = 0$ V		2.4		3.6	V
f_{SD}	Modulator clock frequency(1)			0.03		2.3	MHz
V_I	Absolute input voltage range			$AV_{SS} – 1$		AV_{CC}	V
V_{IC}	Common-mode input voltage range			$AV_{SS} – 1$		AV_{CC}	V
$V_{ID,FS}$	Differential full-scale input voltage	$V_{ID} = V_{I,A+} – V_{I,A–}$		$–V_{REF}$/GAIN		$+V_{REF}$/GAIN	mV
V_{ID}	Differential input voltage for specified performance(2)	SD24REFS = 1	SD24GAINx = 1	±910	±920		mV
			SD24GAINx = 2	±455	±460		
			SD24GAINx = 4	±227	±230		
			SD24GAINx = 8	±113	±115		
			SD24GAINx = 16	±57	±58		
			SD24GAINx = 32	±28	±29		
			SD24GAINx = 64	±14	±14.5		
			SD24GAINx = 128	±7	±7.2		
C_{REF}	VREF load capacitance(3)	SD24REFS = 1			100		nF

(1) Modulator clock frequency: MIN = 32.768 kHz – 10% ≈ 30 kHz. MAX = 32.768 kHz × 64 + 10% ≈ 2.3 MHz
(2) The full-scale range (FSR) is defined by $V_{FS+} = +V_{REF}$/GAIN and $V_{FS–} = –V_{REF}$/GAIN: FSR = $V_{FS+} – V_{FS–} = 2 \times V_{REF}$ / GAIN. If V_{REF} is sourced externally, the analog input range should not exceed 80% of V_{FS+} or $V_{FS–}$; that is, $V_{ID} = 0.8\ V_{FS–}$ to $0.8\ V_{FS+}$. If V_{REF} is sourced internally, the given V_{ID} ranges apply.
(3) There is no capacitance required on VREF. However, a capacitance of 100 nF is recommended to reduce any reference voltage noise.

Table 5-36 lists the analog input characteristics of the SD24_B.

Table 5-36. SD24_B Analog Input (1)

PARAMETER		TEST CONDITIONS		V_{CC}	MIN	TYP	MAX	UNIT
C_I	Input capacitance	SD24GAINx = 1				5		pF
		SD24GAINx = 2				5		
		SD24GAINx = 4				5		
		SD24GAINx = 8				5		
		SD24GAINx = 16				5		
		SD24GAINx = 32, 64, 128				5		
Z_I	Input impedance (Pin A+ or A- to AV_{SS})	f_{SD24} = 1 MHz	SD24GAINx = 1	3 V		200		kΩ
			SD24GAINx = 8	3 V		200		
			SD24GAINx = 32	3 V		200		
Z_{ID}	Differential input impedance (Pin A+ to pin A-)	f_{SD24} = 1 MHz	SD24GAINx = 1	3 V	300	400		kΩ
			SD24GAINx = 8	3 V		400		
			SD24GAINx = 32	3 V	300	400		

(1) All parameters pertain to each SD24_B converter.

Copyright © 2015–2018, Texas Instruments Incorporated

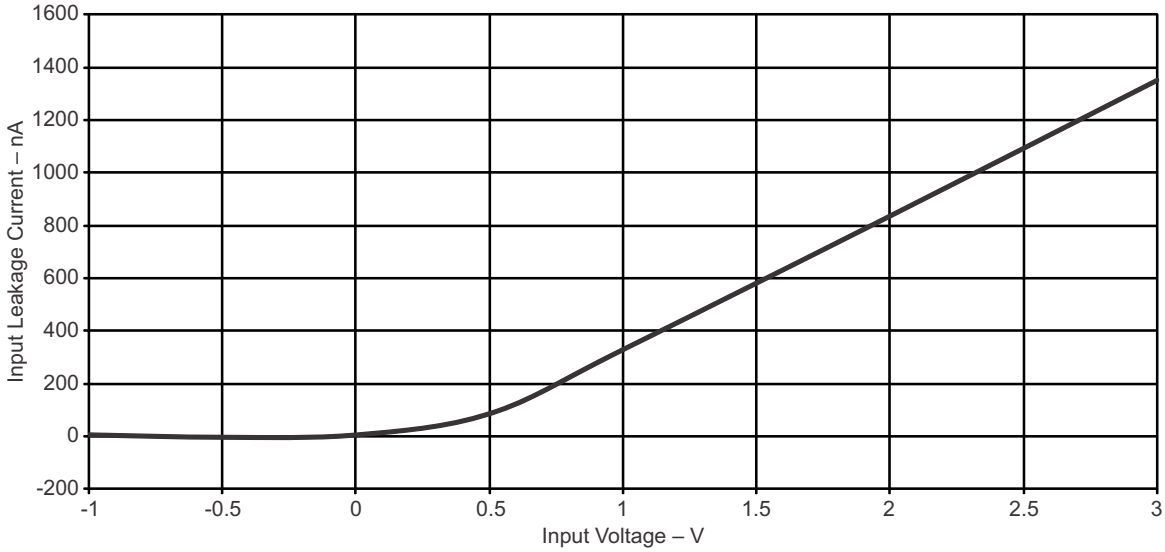

Figure 5-18. Input Leakage Current vs Input Voltage (Modulator OFF)

Table 5-37 lists the supply current of the SD24_B.

Table 5-37. SD24_B Supply Currents

PARAMETER		TEST CONDITIONS		V_{CC}	MIN	TYP	MAX	UNIT
$I_{SD,256}$	Analog plus digital supply current per converter (reference not included)	f_{SD24} = 1 MHz, SD24OSR = 256	SD24GAIN: 1	3 V		600	675	µA
			SD24GAIN: 2	3 V		600	675	
			SD24GAIN: 4	3 V		600	675	
			SD24GAIN: 8	3 V		700	750	
			SD24GAIN: 16	3 V		700	750	
			SD24GAIN: 32	3 V		775	850	
			SD24GAIN: 64	3 V		775	850	
			SD24GAIN: 128	3 V		775	850	
$I_{SD,512}$	Analog plus digital supply current per converter (reference not included)	f_{SD24} = 2 MHz, SD24OSR = 512	SD24GAIN: 1	3 V		750	800	µA
			SD24GAIN: 8	3 V		825	900	
			SD24GAIN: 32	3 V		900	1000	

Table 5-38 lists the performance characteristics of the SD24_B.

Table 5-38. SD24_B Performance

f_{SD24} = 1 MHz, SD24OSRx = 256, SD24REFS = 1

PARAMETER		TEST CONDITIONS	V_{CC}	MIN	TYP	MAX	UNIT
INL	Integral nonlinearity, end-point fit	SD24GAIN: 1	3 V	–0.01		0.01	% of FSR
		SD24GAIN: 8	3 V	–0.01		0.01	
		SD24GAIN: 32	3 V	–0.01		0.01	
G_{nom}	Nominal gain	SD24GAIN: 1	3 V		1		
		SD24GAIN: 2	3 V		2		
		SD24GAIN: 4	3 V		4		
		SD24GAIN: 8	3 V		8		
		SD24GAIN: 16	3 V		16		
		SD24GAIN: 32	3 V		31.7		
		SD24GAIN: 64	3 V		63.4		
		SD24GAIN: 128	3 V		126.8		

Copyright © 2015–2018, Texas Instruments Incorporated

Table 5-38. SD24_B Performance (continued)

f_{SD24} = 1 MHz, SD24OSRx = 256, SD24REFS = 1

PARAMETER		TEST CONDITIONS	V_{CC}	MIN	TYP	MAX	UNIT
E_G	Gain error (1)	SD24GAIN: 1, with external reference (1.2 V)	3 V	–1%		+1%	
		SD24GAIN: 8, with external reference (1.2 V)	3 V	–2%		+2%	
		SD24GAIN: 32, with external reference (1.2 V)	3 V	–2%		+2%	
$\Delta E_G/\Delta T$	Gain error temperature coefficient (2), internal reference	SD24GAIN: 1, 8, or 32 (with internal reference)	3 V			50	ppm/°C
$\Delta E_G/\Delta V_{CC}$	Gain error vs V_{CC} (3)	SD24GAIN: 1			0.15		%/V
		SD24GAIN: 8			0.15		
		SD24GAIN: 32			0.4		
E_{OS}[V]	Offset error (4)	SD24GAIN: 1 (with V_{diff} = 0 V)	3 V			2.3	mV
		SD24GAIN: 8	3 V			0.73	
		SD24GAIN: 32	3 V			0.18	
E_{OS}[FS]	Offset error (4)	SD24GAIN: 1 (with V_{diff} = 0 V)	3 V	–0.2		0.2	% FS
		SD24GAIN: 8	3 V	–0.5		0.5	
		SD24GAIN: 32	3 V	–0.5		0.5	
$\Delta E_{OS}/\Delta T$	Offset error temperature coefficient (5)	SD24GAIN: 1	3 V		1		µV/°C
		SD24GAIN: 8	3 V		0.15		
		SD24GAIN: 32	3 V		0.1		
$\Delta E_{OS}/\Delta V_{CC}$	Offset error vs V_{CC} (6)	SD24GAIN: 1			600		µV/V
		SD24GAIN: 8			100		
		SD24GAIN: 32			50		
CMRR,DC	Common-mode rejection at DC (7)	SD24GAIN: 1	3 V		–110		dB
		SD24GAIN: 8	3 V		–110		
		SD24GAIN: 32	3 V		–110		

(1) The gain error E_G specifies the deviation of the actual gain G_{act} from the nominal gain G_{nom}: $E_G = (G_{act} – G_{nom})/G_{nom}$. It covers process, temperature and supply voltage variations.

(2) The gain error temperature coefficient $\Delta E_G / \Delta T$ specifies the variation of the gain error E_G over temperature ($E_G(T) = (G_{act}(T) – G_{nom})/G_{nom}$) using the box method (that is, MIN and MAX values):
$\Delta E_G/ \Delta T = (MAX(E_G(T)) – MIN(E_G(T))) / (MAX(T) – MIN(T)) = (MAX(G_{act}(T)) – MIN(G_{act}(T)) / G_{nom} / (MAX(T) – MIN(T))$
with T ranging from –40°C to +85°C.

(3) The gain error vs V_{CC} coefficient $\Delta E_G/ \Delta V_{CC}$ specifies the variation of the gain error E_G over supply voltage ($E_G(V_{CC}) = (G_{act}(V_{CC}) – G_{nom})/G_{nom}$) using the box method (that is, MIN and MAX values):
$\Delta E_G/ \Delta V_{CC} = (MAX(E_G(V_{CC})) – MIN(E_G(V_{CC})) / (MAX(V_{CC}) – MIN(V_{CC})) = (MAX(G_{act}(V_{CC})) – MIN(G_{act}(V_{CC})) / G_{nom} / (MAX(V_{CC}) – MIN(V_{CC}))$
with V_{CC} ranging from 2.4 V to 3.6 V.

(4) The offset error E_{OS} is measured with shorted inputs in 2s-complement mode with +100% FS = V_{REF} / G and –100% FS = –V_{REF} / G. Conversion between E_{OS} [FS] and E_{OS} [V] is as follows: E_{OS} [FS] = E_{OS} [V]×G/V_{REF}; E_{OS} [V] = E_{OS} [FS]×V_{REF}/G.

(5) The offset error temperature coefficient $\Delta E_{OS} / \Delta T$ specifies the variation of the offset error E_{OS} over temperature using the box method (that is, MIN and MAX values):
$\Delta E_{OS} / \Delta T = (MAX(E_{OS}(T)) – MIN(E_{OS}(T)) / (MAX(T) – MIN(T))$
with T ranging from –40°C to +85°C.

(6) The offset error vs V_{CC} $\Delta E_{OS} / \Delta V_{CC}$ specifies the variation of the offset error E_{OS} over supply voltage using the box method (that is, MIN and MAX values):
$\Delta E_{OS} / \Delta V_{CC} = (MAX(E_{OS}(V_{CC})) – MIN(E_{OS}(V_{CC})) / (MAX(V_{CC}) – MIN(V_{CC}))$
with V_{CC} ranging from 2.4 V to 3.6 V.

(7) The DC CMRR specifies the change in the measured differential input voltage value when the common-mode voltage varies:
DC CMRR = $–20\log(\Delta_{MAX}/FSR)$ with Δ_{MAX} being the difference between the minium value and the maximum value measured when sweeping the common-mode voltage (for example, calculating with 16-bit FSR = 65536, a maximum change by 1 LSB results in $–20\log(1/65536) \approx –96$ dB) .
The DC CMRR is measured with both inputs connected to the common-mode voltage (that is, no differential input signal is applied), and the common-mode voltage is swept from –1 V to V_{CC}.

Copyright © 2015–2018, Texas Instruments Incorporated

Table 5-38. SD24_B Performance (continued)

f_{SD24} = 1 MHz, SD24OSRx = 256, SD24REFS = 1

PARAMETER		TEST CONDITIONS	V_{CC}	MIN	TYP	MAX	UNIT
CMRR,50Hz	Common-mode rejection at 50 Hz (8)	SD24GAIN: 1, f_{CM} = 50 Hz, V_{CM} = 930 mV	3 V		–110		dB
		SD24GAIN: 8, f_{CM} = 50 Hz, V_{CM} = 120 mV	3 V		–110		
		SD24GAIN: 32, f_{CM} = 50 Hz, V_{CM} = 30 mV	3 V		–110		
AC PSRR,ext	AC power supply rejection ratio, external reference (9)	SD24GAIN: 1, V_{CC} = 3 V + 50 mV × sin(2π × f_{Vcc} × t), f_{Vcc} = 50 Hz			–61		dB
		SD24GAIN: 8, V_{CC} = 3 V + 50 mV × sin(2π × f_{Vcc} × t), f_{Vcc} = 50 Hz			–77		
		SD24GAIN: 32, V_{CC} = 3 V + 50 mV × sin(2π × f_{Vcc} × t), f_{Vcc} = 50 Hz			–79		
AC PSRR,int	AC power supply rejection ratio, internal reference (9)	SD24GAIN: 1, V_{CC} = 3 V + 50 mV × sin(2π × f_{Vcc} × t), f_{Vcc} = 50 Hz			–61		dB
		SD24GAIN: 8, V_{CC} = 3 V + 50 mV × sin(2π × f_{Vcc} × t), f_{Vcc} = 50 Hz			–77		
		SD24GAIN: 32, V_{CC} = 3 V + 50 mV × sin(2π × f_{Vcc} × t), f_{Vcc} = 50 Hz			–79		
XT	Crosstalk between converters (10)	Crosstalk source: SD24GAIN: 1, Sine wave with maximum possible Vpp, f_{IN} = 50 Hz or 100 Hz, Converter under test: SD24GAIN: 1	3 V		–120		dB
		Crosstalk source: SD24GAIN: 1, Sine wave with maximum possible Vpp, f_{IN} = 50 Hz or 100 Hz, Converter under test: SD24GAIN: 8	3 V		–115		
		Crosstalk source: SD24GAIN: 1, Sine wave with maximum possible Vpp, f_{IN} = 50 Hz or 100 Hz, Converter under test: SD24GAIN: 32	3 V		–100		

(8) The AC CMRR is the difference between a hypothetical signal with the amplitude and frequency of the applied common-mode ripple applied to the inputs of the ADC and the actual common-mode signal spur visible in the FFT spectrum:
AC CMRR = Error Spur [dBFS] – 20log(V_{CM} / 1.2 V / G) [dBFS] with a common-mode signal of V_{CM} × sin(2π × f_{CM} × t) applied to the analog inputs.
The AC CMRR is measured with the both inputs connected to the common-mode signal (that is, no differential input signal is applied).
With the specified typical values the error spur is within the noise floor (as specified by the SINAD values).

(9) The AC PSRR is the difference between a hypothetical signal with the amplitude and frequency of the applied supply voltage ripple applied to the inputs of the ADC and the actual supply ripple spur visible in the FFT spectrum:
AC PSRR = Error Spur [dBFS] – 20log(50 mV / 1.2 V / G) [dBFS] with a signal of 50 mV × sin(2π × f_{Vcc} × t) added to V_{CC}.
The AC PSRR is measured with the inputs grounded (that is, no analog input signal is applied).
With the specified typical values the error spur is within the noise floor (as specified by the SINAD values).
SD24GAIN: 1 → Hypothetical signal: 20log(50 mV / 1.2 V / 1) = –27.6 dBFS
SD24GAIN: 8 → Hypothetical signal: 20log(50 mV / 1.2 V / 8) = –9.5 dBFS
SD24GAIN: 32 → Hypothetical signal: 20log(50 mV / 1.2 V / 32) = 2.5 dBFS

(10) The crosstalk (XT) is specified as the tone level of the signal applied to the crosstalk source seen in the spectrum of the converter under test. It is measured with the inputs of the converter under test being grounded.

Copyright © 2015–2018, Texas Instruments Incorporated

Table 5-39 lists the AC performance characteristics of the SD24_B.

Table 5-39. SD24_B AC Performance

f_{SD24} = 1 MHz, SD24OSRx = 256, SD24REFS = 1

PARAMETER		TEST CONDITIONS		V_{CC}	MIN	TYP	MAX	UNIT
SINAD	Signal-to-noise + distortion ratio	SD24GAIN: 1	f_{IN} = 50 Hz (1)	3 V	85	87		dB
		SD24GAIN: 2		3 V		86		
		SD24GAIN: 4		3 V		85		
		SD24GAIN: 8		3 V	82	84		
		SD24GAIN: 16		3 V		80		
		SD24GAIN: 32		3 V	73	74		
		SD24GAIN: 64		3 V		68		
		SD24GAIN: 128		3 V		62		
THD	Total harmonic distortion	SD24GAIN: 1	f_{IN} = 50 Hz (1)	3 V		100		dB
		SD24GAIN: 8		3 V		90		
		SD24GAIN: 32		3 V		80		

(1) The following voltages were applied to the SD24_B inputs:
$V_{I,A+}(t) = 0\ V + V_{PP} / 2 \times \sin(2\pi \times f_{IN} \times t)$
$V_{I,A-}(t) = 0\ V - V_{PP} / 2 \times \sin(2\pi \times f_{IN} \times t)$
resulting in a differential voltage of $V_{ID} = V_{I,A+}(t) - V_{I,A-}(t) = V_{PP} \times \sin(2\pi \times f_{IN} \times t)$ with V_{PP} being selected as the maximum value allowed for a given range (according to SD24_B recommended operating conditions).

Table 5-40 lists the AC performance characteristics of the SD24_B.

Table 5-40. SD24_B AC Performance

f_{SD24} = 2 MHz, SD24OSRx = 512, SD24REFS = 1

PARAMETER		TEST CONDITIONS		V_{CC}	MIN	TYP	MAX	UNIT
SINAD	Signal-to-noise + distortion ratio	SD24GAIN: 1	f_{IN} = 50 Hz (1)	3 V		87		dB
		SD24GAIN: 2		3 V		86		
		SD24GAIN: 4		3 V		85		
		SD24GAIN: 8		3 V		84		
		SD24GAIN: 16		3 V		81		
		SD24GAIN: 32		3 V		76		
		SD24GAIN: 64		3 V		71		
		SD24GAIN: 128		3 V		65		

(1) The following voltages were applied to the SD24_B inputs:
$V_{I,A+}(t) = 0\ V + V_{PP} / 2 \times \sin(2\pi \times f_{IN} \times t)$
$V_{I,A-}(t) = 0\ V - V_{PP} / 2 \times \sin(2\pi \times f_{IN} \times t)$
resulting in a differential voltage of $V_{ID} = V_{I,A+}(t) - V_{I,A-}(t) = V_{PP} \times \sin(2\pi \times f_{IN} \times t)$ with V_{PP} being selected as the maximum value allowed for a given range (according to SD24_B recommended operating conditions).

Copyright © 2015–2018, Texas Instruments Incorporated

Table 5-41 lists the AC performance characteristics of the SD24_B.

Table 5-41. SD24_B AC Performance

f_{SD24} = 32 kHz, SD24OSRx = 512, SD24REFS = 1

PARAMETER		TEST CONDITIONS		V_{CC}	MIN	TYP	MAX	UNIT
SINAD	Signal-to-noise + distortion ratio	SD24GAIN: 1	f_{IN} = 12 Hz (1)	3 V		89		dB
		SD24GAIN: 2		3 V		85		
		SD24GAIN: 4		3 V		84		
		SD24GAIN: 8		3 V		86		
		SD24GAIN: 16		3 V		80		
		SD24GAIN: 32		3 V		76		
		SD24GAIN: 64		3 V		67		
		SD24GAIN: 128		3 V		61		

(1) The following voltages were applied to the SD24_B inputs:
$V_{I,A+}(t) = 0\ V + V_{PP} / 2 \times \sin(2\pi \times f_{IN} \times t)$
$V_{I,A-}(t) = 0\ V - V_{PP} / 2 \times \sin(2\pi \times f_{IN} \times t)$
resulting in a differential voltage of $V_{ID} = V_{I,A+}(t) - V_{I,A-}(t) = V_{PP} \times \sin(2\pi \times f_{IN} \times t)$ with V_{PP} being selected as the maximum value allowed for a given range (according to SD24_B recommended operating conditions).

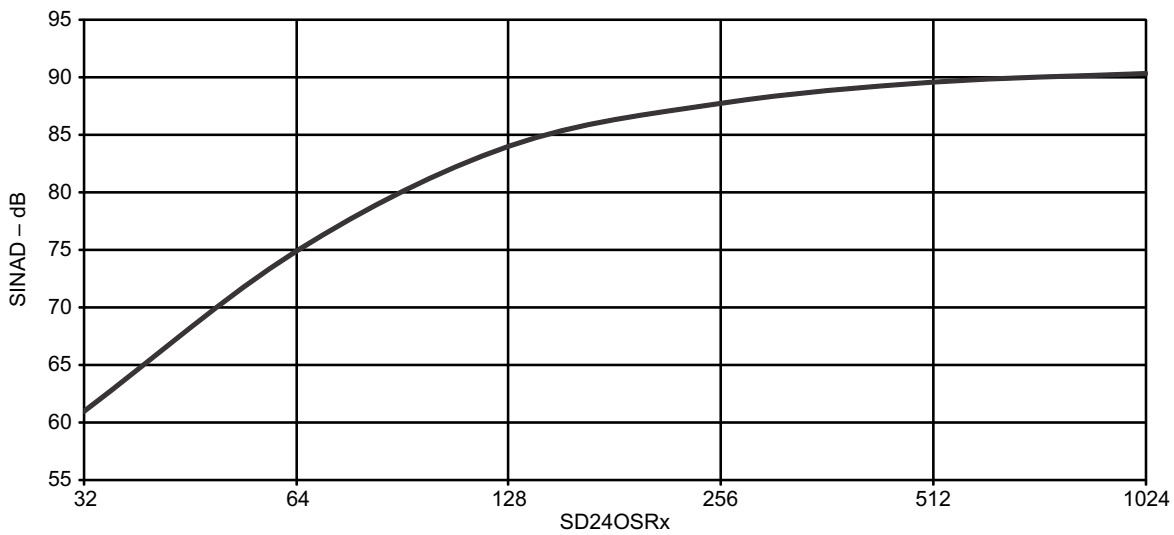

Figure 5-19. SINAD vs OSR
(f_{SD24} = 1 MHz, SD24REFS = 1, SD24GAIN = 1)

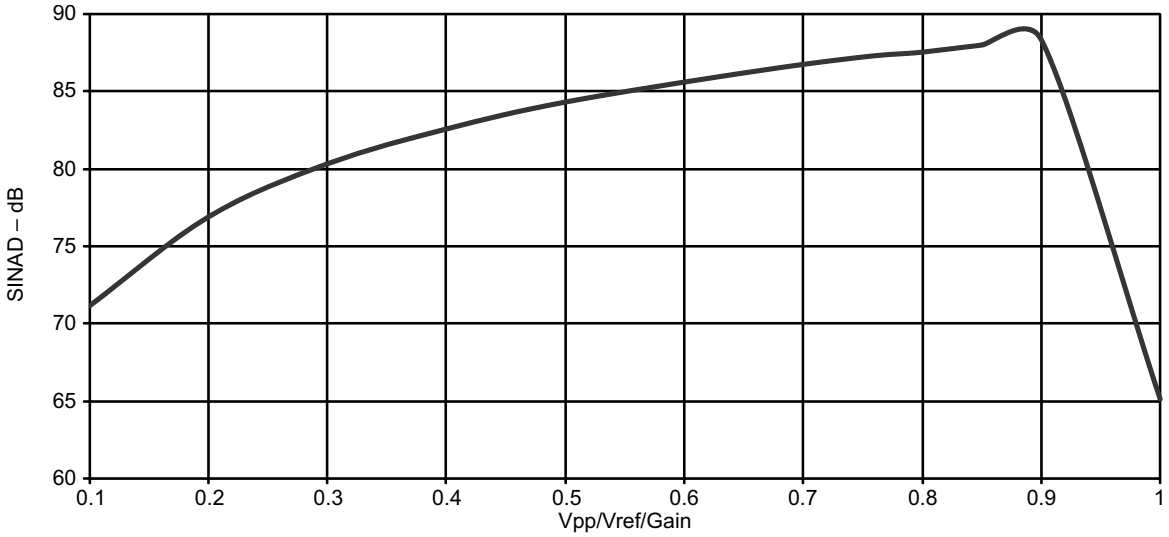

Figure 5-20. SINAD vs V_{PP}

Table 5-42 lists the external reference input requirements of the SD24_B.

Table 5-42. SD24_B External Reference Input

ensure correct input voltage range according to V_{REF}

PARAMETER		TEST CONDITIONS	V_{CC}	MIN	TYP	MAX	UNIT
$V_{REF(I)}$	Input voltage	SD24REFS = 0	3 V	1.0	1.20	1.5	V
$I_{REF(I)}$	Input current	SD24REFS = 0	3 V			50	nA

版权 © 2015–2018, Texas Instruments Incorporated

5.8.11 ADC10_A Module

Table 5-43 lists the input requirements of the ADC.

Table 5-43. 10-Bit ADC, Power Supply and Input Range Conditions

over recommended ranges of supply voltage and operating free-air temperature (unless otherwise noted)

PARAMETER		TEST CONDITIONS	V_{CC}	MIN	TYP	MAX	UNIT
AV_{CC}	Analog supply voltage	AV_{CC} and DV_{CC} are connected together, AV_{SS} and DV_{SS} are connected together, $V_{(AVSS)} = V_{(DVSS)} = 0$ V		1.8		3.6	V
$V_{(Ax)}$	Analog input voltage range (1)	All ADC10_A pins		0		AV_{CC}	V
I_{ADC10_A}	Operating supply current into AVCC terminal, REF module and reference buffer off	$f_{ADC10CLK}$ = 5 MHz, ADC10ON =1, REFON = 0, SHT0 = 0, SHT1 = 0, ADC10DIV = 0, ADC10SREF = 00	2.2 V		70	105	µA
			3 V		80	115	
	Operating supply current into AVCC terminal, REF module on, reference buffer on	$f_{ADC10CLK}$ = 5 MHz, ADC10ON = 1, REFON = 1, SHT0 = 0, SHT1 = 0, ADC10DIV = 0, ADC10SREF = 01	3 V		130	185	
	Operating supply current into AVCC terminal, REF module off, reference buffer on	$f_{ADC10CLK}$ = 5 MHz, ADC10ON = 1, REFON = 0, SHT0 = 0, SHT1 = 0, ADC10DIV = 0, ADC10SREF = 10, VEREF = 2.5 V	3 V		108	160	
	Operating supply current into AVCC terminal, REF module off, reference buffer off	$f_{ADC10CLK}$ = 5 MHz, ADC10ON = 1, REFON = 0, SHT0 = 0, SHT1 = 0, ADC10DIV = 0, ADC10SREF = 11, VEREF = 2.5 V	3 V		74	105	
C_I	Input capacitance	Only one terminal Ax can be selected at one time from the pad to the ADC10_A capacitor array including wiring and pad.	2.2 V		3.5		pF
R_I	Input MUX ON resistance	AV_{CC} > 2 V, 0 V ≤ V_{Ax} ≤ AV_{CC}				36	kΩ
		1.8 V < AV_{CC} < 2 V, 0 V ≤ V_{Ax} ≤ AV_{CC}				96	

(1) The analog input voltage range must be within the selected reference voltage range V_{R+} to V_{R-} for valid conversion results. The external reference voltage requires decoupling capacitors. Two decoupling capacitors, 10 µF and 100 nF, should be connected to VREF to decouple the dynamic current required for an external reference source if it is used for the ADC10_A. Also see the *MSP430x5xx and MSP430x6xx Family User's Guide*.

Table 5-44 lists the timing parameters of the ADC.

Table 5-44. 10-Bit ADC, Timing Parameters

over recommended ranges of supply voltage and operating free-air temperature (unless otherwise noted)

PARAMETER		TEST CONDITIONS	V_{CC}	MIN	TYP	MAX	UNIT
$f_{ADC10CLK}$		For specified performance of ADC10_A linearity parameters	2.2 V, 3 V	0.45	5	5.5	MHz
$f_{ADC10OSC}$	Internal ADC10_A oscillator (1)	ADC10DIV = 0, $f_{ADC10CLK}$ = $f_{ADC10OSC}$	2.2 V, 3 V	4.4	5.0	5.6	MHz
$t_{CONVERT}$	Conversion time	REFON = 0, Internal oscillator, 12 ADC10CLK cycles, 10-bit mode $f_{ADC10OSC}$ = 4 MHz to 5 MHz	2.2 V, 3 V	2.4		3.0	µs
		External $f_{ADC10CLK}$ from ACLK, MCLK or SMCLK, ADC10SSEL ≠ 0			12 × 1 / $f_{ADC10CLK}$		
$t_{ADC10ON}$	Turnon settling time of the ADC	See (2)				100	ns
t_{Sample}	Sampling time	R_S = 1000 Ω, R_I = 96 kΩ, C_I = 3.5 pF (3)	1.8 V	3			µs
		R_S = 1000 Ω, R_I = 36 kΩ, C_I = 3.5 pF (3)	3 V	1			

(1) The ADC10OSC is sourced directly from MODOSC inside the UCS.
(2) The condition is that the error in a conversion started after $t_{ADC10ON}$ is less than ±0.5 LSB. The reference and input signal are already settled.
(3) Approximately 8 Tau (t) are needed to get an error of less than ±0.5 LSB

Table 5-45 lists the linearity parameters of the ADC.

Table 5-45. 10-Bit ADC, Linearity Parameters

over recommended ranges of supply voltage and operating free-air temperature (unless otherwise noted)

PARAMETER		TEST CONDITIONS	V_{CC}	MIN	TYP	MAX	UNIT
E_I	Integral linearity error	$1.4\ V \le (V_{eREF+} - V_{eREF-}) \le 1.6\ V$, $C_{VeREF+} = 20\ pF$	2.2 V, 3 V			±1.0	LSB
		$1.6\ V < (V_{eREF+} - V_{eREF-}) \le V_{AVCC}$, $C_{VeREF+} = 20\ pF$				±1.0	
E_D	Differential linearity error	$1.4\ V \le (V_{eREF+} - V_{eREF-})$, $C_{VeREF+} = 20\ pF$	2.2 V, 3 V			±1.0	LSB
E_O	Offset error	$1.4\ V \le (V_{eREF+} - V_{eREF-})$, $C_{VeREF+} = 20\ pF$ Internal impedance of source $R_S < 100\ \Omega$	2.2 V, 3 V			±1.0	LSB
E_G	Gain error	$1.4\ V \le (V_{eREF+} - V_{eREF-})$, $C_{VeREF+} = 20\ pF$, ADC10SREFx = 11b	2.2 V, 3 V			±1.0	LSB
E_T	Total unadjusted error	$1.4\ V \le (V_{eREF+} - V_{eREF-})$, $C_{VeREF+} = 20\ pF$, ADC10SREFx = 11b	2.2 V, 3 V		±1.0	±2.0	LSB

Table 5-46 lists the characteristics of the external reference for the ADC.

Table 5-46. 10-Bit ADC, External Reference

over recommended ranges of supply voltage and operating free-air temperature (unless otherwise noted)(1)

PARAMETER		TEST CONDITIONS	V_{CC}	MIN	TYP	MAX	UNIT
V_{eREF+}	Positive external reference voltage input	$V_{eREF+} > V_{eREF-}$ (2)		1.4		AV_{CC}	V
V_{eREF-}	Negative external reference voltage input	$V_{eREF+} > V_{eREF-}$ (3)		0		1.2	V
$(V_{eREF+} - V_{eREF-})$	Differential external reference voltage input	$V_{eREF+} > V_{eREF-}$ (4)		1.4		AV_{CC}	V
I_{VeREF+}, I_{VeREF-}	Static input current	$1.4\ V \le V_{eREF+} \le V_{AVCC}$, $V_{eREF-} = 0\ V$, $f_{ADC10CLK} = 5\ MHz$, ADC10SHTx = 0x0001, Conversion rate 200 ksps	2.2 V, 3 V		±8.5	±26	µA
		$1.4\ V \le V_{eREF+} \le V_{AVCC}$, $V_{eREF-} = 0\ V$, $f_{ADC10CLK} = 5\ MHz$, ADC10SHTX = 0x1000, Conversion rate 20 ksps	2.2 V, 3 V			±1	µA
$C_{VeREF+/-}$	Capacitance at VeREF+ or VeREF- terminal	See (5)		10			µF

(1) The external reference is used during ADC conversion to charge and discharge the capacitance array. The input capacitance, C_I, is also the dynamic load for an external reference during conversion. The dynamic impedance of the reference supply should follow the recommendations on analog-source impedance to allow the charge to settle for 10-bit accuracy.
(2) The accuracy limits the minimum positive external reference voltage. Lower reference voltage levels may be applied with reduced accuracy requirements.
(3) The accuracy limits the maximum negative external reference voltage. Higher reference voltage levels may be applied with reduced accuracy requirements.
(4) The accuracy limits the minimum external differential reference voltage. Lower differential reference voltage levels may be applied with reduced accuracy requirements.
(5) Two decoupling capacitors, 10 µF and 100 nF, should be connected to VeREF to decouple the dynamic current required for an external reference source if it is used for the ADC10_A. Also see the *MSP430x5xx and MSP430x6xx Family User's Guide* .

版权 © 2015–2018, Texas Instruments Incorporated

5.8.12 REF Module

Table 5-47 lists the characteristics of the built-in reference.

Table 5-47. REF, Built-In Reference

over recommended ranges of supply voltage and operating free-air temperature (unless otherwise noted)

PARAMETER		TEST CONDITIONS	V_{CC}	MIN	TYP	MAX	UNIT
V_{REF+}	Positive built-in reference voltage	REFVSEL = {2} for 2.5 V, REFON = 1	3 V	2.47	2.51	2.55	V
		REFVSEL = {1} for 2.0 V, REFON = 1	3 V	1.95	1.99	2.03	
		REFVSEL = {0} for 1.5 V, REFON = 1	2.2 V, 3 V	1.46	1.50	1.54	
$AV_{CC(min)}$	AVCC minimum voltage, Positive built-in reference active	REFVSEL = {0} for 1.5 V		1.8			V
		REFVSEL = {1} for 2.0 V		2.2			
		REFVSEL = {2} for 2.5 V		2.7			
I_{REF+}	Operating supply current into AVCC terminal (1)	$f_{ADC10CLK}$ = 5 MHz, REFON = 1, REFBURST = 0, REFVSEL = {2} for 2.5 V	3 V		23	30	µA
		$f_{ADC10CLK}$ = 5 MHz, REFON = 1, REFBURST = 0, REFVSEL = {1} for 2.0 V			21	27	
		$f_{ADC10CLK}$ = 5 MHz, REFON = 1, REFBURST = 0, REFVSEL = {0} for 1.5 V			19	25	
TC_{REF+}	Temperature coefficient of built-in reference (2)	REFVSEL = {0, 1, 2}, REFON = 1			10	50	ppm/°C
I_{SENSOR}	Operating supply current into AVCC terminal	REFON = 1, ADC10ON = 1, INCH = 0Ah, T_A = 30°C	2.2 V		145	220	µA
			3 V		170	245	
V_{SENSOR}	See (3)	REFON = 1, ADC10ON = 1, INCH = 0Ah, T_A = 30°C	2.2 V		780		mV
			3 V		780		
V_{MID}	AV_{CC} divider at channel 11	ADC10ON = 1, INCH = 0Bh, $V_{MID} \approx 0.5 \times V_{AVCC}$	2.2 V	1.08	1.1	1.12	V
			3 V	1.48	1.5	1.52	
$t_{SENSOR(sample)}$	Sample time required if channel 10 is selected (4)	REFON = 1, ADC10ON = 1, INCH = 0Ah, Error of conversion result ≤ 1 LSB		30			µs
$t_{VMID(sample)}$	Sample time required if channel 11 is selected (5)	ADC10ON = 1, INCH = 0Bh, Error of conversion result ≤ 1 LSB		1			µs
PSRR_DC	Power supply rejection ratio (DC)	AV_{CC} = AV_{CC}(min) to AV_{CC}(max), T_A = 25°C, REFVSEL = {0, 1, 2}, REFON = 1			120	300	µV/V
PSRR_AC	Power supply rejection ratio (AC)	AV_{CC} = AV_{CC}(min) to AV_{CC}(max), T_A = 25°C, f = 1 kHz, ΔVpp = 100 mV, REFVSEL = {0, 1, 2}, REFON = 1			1		mV/V
t_{SETTLE}	Settling time of reference voltage (6)	AV_{CC} = AV_{CC}(min) to AV_{CC}(max), REFVSEL = {0, 1, 2}, REFON = 0 → 1			75		µs
$V_{SD24REF}$	SD24_B internal reference voltage	SD24REFS = 1	3 V	1.137	1.151	1.165	V
t_{ON}	SD24_B internal reference turnon time (7)	SD24REFS = 0→1, C_{REF} = 100 nF	3 V		200		µs

(1) The internal reference current is supplied by terminal AVCC. Consumption is independent of the ADC10ON control bit, unless a conversion is active. The REFON bit enables to settle the built-in reference before starting an A/D conversion.
(2) Calculated using the box method: (MAX(–40°C to 85°C) – MIN(–40°C to 85°C)) / MIN(–40°C to 85°C)/(85°C – (–40°C)).
(3) The temperature sensor offset can be significant. TI recommends a single-point calibration to minimize the offset error of the built-in temperature sensor.
(4) The typical equivalent impedance of the sensor is 51 kΩ. The sample time required includes the sensor-on time $t_{SENSOR(on)}$.
(5) The on-time $t_{VMID(on)}$ is included in the sampling time $t_{VMID(sample)}$; no additional on time is needed.
(6) The condition is that the error in a conversion started after t_{REFON} is ≤ 1 LSB.
(7) The condition is that SD24_B conversion started after t_{ON} should ensure specified SINAD values for the selected Gain, OSR, and f_{SD24}.

5.8.13 Flash

Table 5-48 lists the characteristics of the flash memory.

Table 5-48. Flash Memory

over recommended ranges of supply voltage and operating free-air temperature (unless otherwise noted)

PARAMETER		T_J	MIN	TYP	MAX	UNIT
$DV_{CC(PGM/ERASE)}$	Program and erase supply voltage		1.8		3.6	V
I_{PGM}	Average supply current from DVCC during program			3	5	mA
I_{ERASE}	Average supply current from DVCC during erase			6	11	mA
I_{MERASE}, I_{BANK}	Average supply current from DVCC during mass erase or bank erase			6	11	mA
t_{CPT}	Cumulative program time(1)				16	ms
	Program and erase endurance		10^4	10^5		cycles
$t_{Retention}$	Data retention duration	25°C	100			years
t_{Word}	Word or byte program time(2)		64		85	µs
$t_{Block, 0}$	Block program time for first byte or word(2)		49		65	µs
$t_{Block, 1–(N–1)}$	Block program time for each additional byte or word, except for last byte or word(2)		37		49	µs
$t_{Block, N}$	Block program time for last byte or word(2)		55		73	µs
t_{Erase}	Erase time for segment erase, mass erase, and bank erase when available(2)		23		32	ms
$f_{MCLK,MGR}$	MCLK frequency in marginal read mode (FCTL4.MGR0 = 1 or FCTL4. MGR1 = 1)		0		1	MHz

(1) The cumulative program time must not be exceeded when writing to a 128-byte flash block. This parameter applies to all programming modes: individual word or byte write and block write.
(2) These values are hardwired into the state machine of the flash controller.

5.8.14 Emulation and Debug

Table 5-49 lists the characteristics of the JTAG and Spy-Bi-Wire interface.

Table 5-49. JTAG and Spy-Bi-Wire Interface

over recommended ranges of supply voltage and operating free-air temperature (unless otherwise noted)

PARAMETER		V_{CC}	MIN	TYP	MAX	UNIT
f_{SBW}	Spy-Bi-Wire input frequency	2.2 V, 3 V	0		20	MHz
$t_{SBW,Low}$	Spy-Bi-Wire low clock pulse duration	2.2 V, 3 V	0.025		15	µs
$t_{SBW, En}$	Spy-Bi-Wire enable time (TEST high to acceptance of first clock edge)(1)	2.2 V, 3 V			1	µs
$t_{SBW,Rst}$	Spy-Bi-Wire return to normal operation time		15		100	µs
f_{TCK}	TCK input frequency for 4-wire JTAG(2)	2.2 V	0		5	MHz
		3 V	0		10	
$R_{internal}$	Internal pulldown resistance on TEST	2.2 V, 3 V	45	60	80	kΩ

(1) Tools that access the Spy-Bi-Wire interface must wait for the minimum $t_{SBW,En}$ time after pulling the TEST/SBWTCK pin high before applying the first SBWTCK clock edge.
(2) f_{TCK} may be restricted to meet the timing requirements of the module selected.

版权 © 2015–2018, Texas Instruments Incorporated

6 Detailed Description

6.1 Overview

The MSP430F673xA and MSP430F673xA microcontrollers feature three high-performance 24-bit sigma-delta ADCs, a 10-bit ADC, four enhanced universal serial communication interfaces (three eUSCI_A modules and one eUSCI_B module), four 16-bit timers, a hardware multiplier, a DMA module, an RTC module with alarm capabilities, a segment LCD driver with integrated contrast control, an auxiliary supply system, and up to 72 I/O pins in the 100-pin devices and 52 I/O pins in the 80-pin devices.

6.2 CPU

The MSP430 CPU has a 16-bit RISC architecture that is highly transparent to the application. All operations, other than program-flow instructions, are performed as register operations in conjunction with seven addressing modes for source operand and four addressing modes for destination operand.

The CPU is integrated with 16 registers that provide reduced instruction execution time. The register-to-register operation execution time is one cycle of the CPU clock. Four of the registers, R0 to R3, are dedicated as program counter, stack pointer, status register, and constant generator, respectively. The remaining registers are general-purpose registers (see 图 6-1).

Peripherals are connected to the CPU using data, address, and control buses. Peripherals can be managed with all instructions.

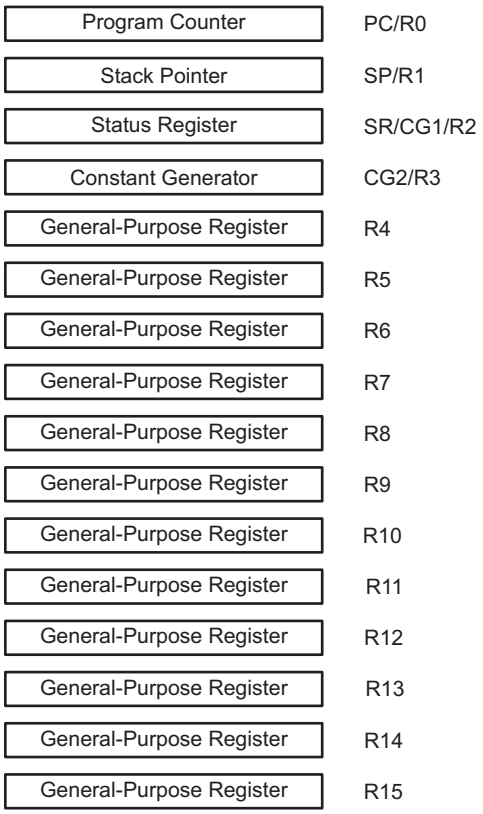

图 6-1. Integrated CPU Registers

6.3 Instruction Set

The instruction set consists of the original 51 instructions with three formats and seven address modes and additional instructions for the expanded address range. Each instruction can operate on word and byte data. 表 6-1 lists examples of the three types of instruction formats. 表 6-2 lists the address modes.

表 6-1. Instruction Word Formats

INSTRUCTION WORD FORMAT	EXAMPLE	OPERATION
Dual operands, source-destination	ADD R4,R5	R4 + R5 → R5
Single operands, destination only	CALL R8	PC → (TOS), R8 → PC
Relative jump, conditional or unconditional	JNE	Jump-on-equal bit = 0

表 6-2. Address Mode Descriptions

ADDRESS MODE	S(1)	D(1)	SYNTAX	EXAMPLE	OPERATION
Register	+	+	MOV Rs,Rd	MOV R10,R11	R10 → R11
Indexed	+	+	MOV X(Rn),Y(Rm)	MOV 2(R5),6(R6)	M(2+R5) → M(6+R6)
Symbolic (PC relative)	+	+	MOV EDE,TONI		M(EDE) → M(TONI)
Absolute	+	+	MOV & MEM, & TCDAT		M(MEM) → M(TCDAT)
Indirect	+		MOV @Rn,Y(Rm)	MOV @R10,Tab(R6)	M(R10) → M(Tab+R6)
Indirect autoincrement	+		MOV @Rn+,Rm	MOV @R10+,R11	M(R10) → R11 R10 + 2 → R10
Immediate	+		MOV #X,TONI	MOV #45,TONI	#45 → M(TONI)

(1) S = source, D = destination

版权 © 2015–2018, Texas Instruments Incorporated

6.4 Operating Modes

The MSP430F673xA and MSP430F673xA microcontrollers have one active mode and seven software-selectable low-power modes of operation. An interrupt event can wake up the device from any of the low-power modes, service the request, and restore back to the low-power mode on return from the interrupt program.

Software can configure the following operating modes:

- Active mode (AM)
  - All clocks are active
- Low-power mode 0 (LPM0)
  - CPU is disabled
  - ACLK and SMCLK remain active, MCLK is disabled
  - FLL loop control remains active
- Low-power mode 1 (LPM1)
  - CPU is disabled
  - FLL loop control is disabled
  - ACLK and SMCLK remain active, MCLK is disabled
- Low-power mode 2 (LPM2)
  - CPU is disabled
  - MCLK and FLL loop control and DCOCLK are disabled
  - DC generator of the DCO remains enabled
  - ACLK remains active
- Low-power mode 3 (LPM3)
  - CPU is disabled
  - MCLK, FLL loop control, and DCOCLK are disabled
  - DC generator of the DCO is disabled
  - ACLK remains active
- Low-power mode 4 (LPM4)
  - CPU is disabled
  - ACLK is disabled
  - MCLK, FLL loop control, and DCOCLK are disabled
  - DC generator of the DCO is disabled
  - Crystal oscillator is stopped
  - Complete data retention
- Low-power mode 3.5 (LPM3.5)
  - Internal regulator disabled
  - No RAM retention, Backup RAM retained
  - I/O pad state retention
  - RTC clocked by low-frequency oscillator
  - Wake-up input from $\overline{\text{RST}}$/NMI, RTC_C events, Ports P1 and P2
- Low-power mode 4.5 (LPM4.5)
  - Internal regulator disabled
  - No RAM retention, Backup RAM retained
  - RTC is disabled
  - I/O pad state retention
  - Wake-up input from $\overline{\text{RST}}$/NMI, Ports P1 and P2

6.5 Interrupt Vector Addresses

The interrupt vectors and the power-up start address are in the address range 0FFFFh to 0FF80h (see 表 6-3). The vector contains the 16-bit address of the appropriate interrupt-handler instruction sequence.

表 6-3. Interrupt Sources, Flags, and Vectors

INTERRUPT SOURCE	INTERRUPT FLAG	SYSTEM INTERRUPT	WORD ADDRESS	PRIORITY
System Reset Power-Up External Reset Watchdog Time-out, Key Violation Flash Memory Key Violation	WDTIFG, KEYV (SYSRSTIV)(1) (2)	Reset	0FFFEh	63, highest
System NMI PMM Vacant Memory Access JTAG Mailbox	SVMLIFG, SVMHIFG, DLYLIFG, DLYHIFG, VLRLIFG, VLRHIFG, VMAIFG, JMBNIFG, JMBOUTIFG (SYSSNIV) (1) (3)	(Non)maskable	0FFFCh	62
User NMI NMI Oscillator Fault Flash Memory Access Violation Supply Switch	NMIIFG, OFIFG, ACCVIFG, AUXSWNMIFG (SYSUNIV)(1) (3)	(Non)maskable	0FFFAh	61
Watchdog Timer_A Interval Timer Mode	WDTIFG	Maskable	0FFF8h	60
eUSCI_A0 Receive or Transmit	UCA0RXIFG, UCA0TXIFG (UCA0IV)(1) (4)	Maskable	0FFF6h	59
eUSCI_B0 Receive or Transmit	UCB0RXIFG, UCB0TXIFG (UCB0IV)(1) (4)	Maskable	0FFF4h	58
ADC10_A	ADC10IFG0, ADC10INIFG, ADC10LOIFG, ADC10HIIFG, ADC10TOVIFG, ADC10OVIFG (ADC10IV)(1) (4)	Maskable	0FFF2h	57
SD24_B	SD24_B Interrupt Flags (SD24IV)(1) (4)	Maskable	0FFF0h	56
Timer TA0	TA0CCR0 CCIFG0(4)	Maskable	0FFEEh	55
Timer TA0	TA0CCR1 CCIFG1, TA0CCR2 CCIFG2, TA0IFG (TA0IV)(1) (4)	Maskable	0FFECh	54
eUSCI_A1 Receive or Transmit	UCA1RXIFG, UCA1TXIFG (UCA1IV)(1) (4)	Maskable	0FFEAh	53
eUSCI_A2 Receive or Transmit	UCA2RXIFG, UCA2TXIFG (UCA2IV)(1) (4)	Maskable	0FFE8h	52
Auxiliary Supplies	Auxiliary Supplies Interrupt Flags (AUXIV)(1) (4)	Maskable	0FFE6h	51
DMA	DMA0IFG, DMA1IFG, DMA2IFG (DMAIV)(1) (4)	Maskable	0FFE4h	50
Timer TA1	TA1CCR0 CCIFG0(4)	Maskable	0FFE2h	49
Timer TA1	TA1CCR1 CCIFG1, TA1IFG (TA1IV)(1) (4)	Maskable	0FFE0h	48
I/O Port P1	P1IFG.0 to P1IFG.7 (P1IV)(1) (4)	Maskable	0FFDEh	47
Timer TA2	TA2CCR0 CCIFG0(4)	Maskable	0FFDCh	46
Timer TA2	TA2CCR1 CCIFG1, TA2IFG (TA2IV)(1) (4)	Maskable	0FFDAh	45
I/O Port P2	P2IFG.0 to P2IFG.7 (P2IV)(1) (4)	Maskable	0FFD8h	44
Timer TA3	TA3CCR0 CCIFG0(4)	Maskable	0FFD6h	43
Timer TA3	TA3CCR1 CCIFG1, TA3IFG (TA3IV)(1) (4)	Maskable	0FFD4h	42
LCD_C	LCD_C Interrupt Flags (LCDCIV)(1) (4)	Maskable	0FFD2h	41
RTC_C	RTCOFIFG, RTCRDYIFG, RTCTEVIFG, RTCAIFG, RT0PSIFG, RT1PSIFG (RTCIV)(1) (4)	Maskable	0FFD0h	40

(1) Multiple source flags
(2) A reset is generated if the CPU tries to fetch instructions from within peripheral space or vacant memory space.
(3) (Non)maskable: the individual interrupt-enable bit can disable an interrupt event, but the general-interrupt enable cannot disable it.
(4) Interrupt flags are located in the module.

版权 © 2015–2018, Texas Instruments Incorporated

表 6-3. Interrupt Sources, Flags, and Vectors (continued)

INTERRUPT SOURCE	INTERRUPT FLAG	SYSTEM INTERRUPT	WORD ADDRESS	PRIORITY
Reserved	Reserved(5)		0FFCEh	39
			⋮	⋮
			0FF80h	0, lowest

(5) Reserved interrupt vectors at addresses are not used in this device and can be used for regular program code if necessary. To maintain compatibility with other devices, TI recommends reserving these locations.

6.6 Bootloader (BSL)

The BSL lets users program the flash memory or RAM using various serial interfaces. Access to the device memory through the BSL is protected by an user-defined password. BSL entry requires a specific entry sequence on the $\overline{\text{RST}}$/NMI/SBWTDIO and TEST/SBWTCK pins. For complete description of the features of the BSL and its implementation, see the *MSP430™ Flash Device Bootloader (BSL) User's Guide*. 表 6-4 lists the BSL pin requirements.

表 6-4. UART BSL Pin Requirements and Functions

DEVICE SIGNAL	BSL FUNCTION
$\overline{\text{RST}}$/NMI/SBWTDIO	Entry sequence signal
TEST/SBWTCK	Entry sequence signal
P3.0	Data transmit
P3.1	Data receive
DVCC	Power supply
DVSS	Ground supply

6.7 JTAG Operation

6.7.1 JTAG Standard Interface

The MSP430 family supports the standard JTAG interface which requires four signals for sending and receiving data. The JTAG signals are shared with general-purpose I/O. The TEST/SBWTCK pin is used to enable the JTAG signals. In addition to these signals, the $\overline{\text{RST}}$/NMI/SBWTDIO is required to interface with MSP430 development tools and device programmers. 表 6-5 lists the JTAG pin requirements. For further details on interfacing to development tools and device programmers, see the *MSP430 Hardware Tools User's Guide* and *MSP430 Programming With the JTAG Interface*.

表 6-5. JTAG Pin Requirements and Functions

DEVICE SIGNAL	DIRECTION	FUNCTION
PJ.3/ACLK/TCK	IN	JTAG clock input
PJ.2/ADC10CLK/TMS	IN	JTAG state control
PJ.1/MCLK/TDI/TCLK	IN	JTAG data input/TCLK input
PJ.0/SMCLK/TDO	OUT	JTAG data output
TEST/SBWTCK	IN	Enable JTAG pins
$\overline{\text{RST}}$/NMI/SBWTDIO	IN	External reset
DVCC		Power supply
DVSS		Ground supply

6.7.2 Spy-Bi-Wire Interface

In addition to the standard JTAG interface, the MSP430 family supports the two-wire Spy-Bi-Wire interface. Spy-Bi-Wire can be used to interface with MSP430 development tools and device programmers. 表 6-6 lists the Spy-Bi-Wire interface pin requirements. For further details on interfacing to development tools and device programmers, see the *MSP430 Hardware Tools User's Guide* and *MSP430 Programming With the JTAG Interface*.

表 6-6. Spy-Bi-Wire Pin Requirements and Functions

DEVICE SIGNAL	DIRECTION	FUNCTION
TEST/SBWTCK	IN	Spy-Bi-Wire clock input
$\overline{\text{RST}}$/NMI/SBWTDIO	IN, OUT	Spy-Bi-Wire data input/output
DVCC		Power supply
DVSS		Ground supply

6.8 Flash Memory

The flash memory can be programmed through the JTAG port, Spy-Bi-Wire (SBW), the BSL, or in-system by the CPU. The CPU can perform single-byte, single-word, and long-word writes to the flash memory. Features of the flash memory include:

- Flash memory has n segments of main memory and four segments of information memory (A to D) of 128 bytes each. Each segment in main memory is 512 bytes in size.
- Segments 0 to n may be erased in one step, or each segment may be individually erased.
- Segments A to D can be erased individually, or as a group with segments 0 to n. Segments A to D are also called *information memory*.
- Segment A can be locked separately.

6.9 RAM

The RAM is made up of n sectors. Each sector can be completely powered down to save leakage; however, all data are lost. Features of the RAM include:

- RAM has n sectors of 2 kbytes each.
- Each sector 0 to n can be completely disabled; however, data retention is lost.
- Each sector 0 to n automatically enters low-power retention mode when possible.

6.10 Backup RAM

The backup RAM provides a limited number of bytes of RAM that are retained during LPMx.5. This backup RAM is part of the Backup subsystem that operates on dedicated power supply AUXVCC3. 8 bytes of backup RAM are available in this device. The backup RAM can be word-wise accessed through the registers BAKMEM0, BAKMEM1, BAKMEM2, and BAKMEM3. The backup RAM registers cannot be accessed by the CPU when the high-side SVS is disabled by software.

版权 © 2015–2018, Texas Instruments Incorporated

6.11 Peripherals

Peripherals are connected to the CPU through data, address, and control buses. The peripherals can be handled using all instructions. For complete module descriptions, see the *MSP430x5xx and MSP430x6xx Family User's Guide*.

6.11.1 Oscillator and System Clock

The Unified Clock System (UCS) module includes support for a 32768-Hz watch crystal oscillator, an internal very-low-power low-frequency oscillator (VLO), an internal trimmed low-frequency oscillator (REFO), and an integrated internal digitally controlled oscillator (DCO). The UCS module is designed to meet the requirements of both low system cost and low power consumption. The UCS module features digital frequency-locked loop (FLL) hardware that, in conjunction with a digital modulator, stabilizes the DCO frequency to a programmable multiple of the selected FLL reference frequency. The internal DCO provides a fast turn-on clock source and stabilizes in 3 µs (typical). The UCS module provides the following clock signals:

- Auxiliary clock (ACLK), sourced from a 32768-Hz watch crystal, the internal low-frequency oscillator (VLO), or the trimmed low-frequency oscillator (REFO).
- Main clock (MCLK), the system clock used by the CPU. MCLK can be sourced by same sources made available to ACLK.
- Sub-Main clock (SMCLK), the subsystem clock used by the peripheral modules. SMCLK can be sourced by same sources made available to ACLK.
- ACLK/n, the buffered output of ACLK, ACLK/2, ACLK/4, ACLK/8, ACLK/16, ACLK/32.

6.11.2 Power-Management Module (PMM)

The PMM includes an integrated voltage regulator that supplies the core voltage to the device and contains programmable output levels to provide for power optimization. The PMM also includes supply voltage supervisor (SVS) and supply voltage monitoring (SVM) circuitry, as well as brownout protection. The brownout circuit is implemented to provide the proper internal reset signal to the device during power-on and power-off. The SVS/SVM circuitry detects if the supply voltage drops below a user-selectable level and supports both supply voltage supervision (the device is automatically reset) and supply voltage monitoring (the device is not automatically reset). SVS and SVM are available on the primary supply and the core supply.

6.11.3 Auxiliary Supply System

The auxiliary supply system provides the possibility to operate the device from auxiliary supplies when the primary supply fails.There are two auxililary supplies (AUXVCC1 and AUXVCC2) are supported. This module supports automatic and manual switching from primary supply to auxiliary suppllies while maintaining full functionality. It allows threshold based monitoring of primary and auxiliary supplies. The device can be started from primary supply or AUXVCC1, whichever is higher. Auxiliary supply system enables internal monitoring of voltage levels on primary and auxiliary supplies using ADC10_A. Also this module implements simple charger for backup supplies.

6.11.4 Backup Subsystem

The Backup subsystem operates on a dedicated power supply AUXVCC3. This subsystem includes low-frequency oscillator (XT1), RTC module, and backup RAM. The functionality of the Backup subsystem is retained during LPM3.5. The Backup subsystem module registers cannot be accessed by CPU when the high-side SVS is disabled by the user. It is necessary to keep the high-side SVS enabled with SVSHMD = 1 and SVSMHACE = 0 to turn off the low-frequency oscillator (XT1) in LPM4.

6.11.5 Digital I/O

Up to nine 8-bit I/O ports are implemented. For 100-pin options, Ports P1 to P8 are complete, and P9 is reduced to 4-bit I/O. For 80-pin options, Ports P1 to P6 are complete, and P7 to P9 are completely removed. Port PJ contains four individual I/O pins, common to all devices. All I/O bits are individually programmable.

- Any combination of input, output and interrupt conditions is possible.
- Pullup or pulldown on all ports is programmable.
- Programmable drive strength on all ports.
- Edge-selectable interrupt and LPM3.5, LPM4.5 wake-up input capability available for all bits of ports P1 and P2.
- Read and write access to port-control registers is supported by all instructions.
- Ports can be accessed byte-wise (P1 through P9) or word-wise in pairs (PA through PE).

6.11.6 Port Mapping Controller

The port mapping controller allows flexible and reconfigurable mapping of digital functions to P1, P2, and P3 (see 表 6-7). 表 6-8 lists the default settings for all pins that support port mapping.

表 6-7. Port Mapping Mnemonics and Functions

VALUE	PxMAPy MNEMONIC	INPUT PIN FUNCTION	OUTPUT PIN FUNCTION
0	PM_NONE	None	DVSS
1	PM_UCA0RXD	eUSCI_A0 UART RXD (direction controlled by eUSCI – Input)	
	PM_UCA0SOMI	eUSCI_A0 SPI slave out master in (direction controlled by eUSCI)	
2	PM_UCA0TXD	eUSCI_A0 UART TXD (direction controlled by eUSCI – Output)	
	PM_UCA0SIMO	eUSCI_A0 SPI slave in master out (direction controlled by eUSCI)	
3	PM_UCA0CLK	eUSCI_A0 clock input/output (direction controlled by eUSCI)	
4	PM_UCA0STE	eUSCI_A0 SPI slave transmit enable (direction controlled by eUSCI)	
5	PM_UCA1RXD	eUSCI_A1 UART RXD (direction controlled by eUSCI – Input)	
	PM_UCA1SOMI	eUSCI_A1 SPI slave out master in (direction controlled by eUSCI)	
6	PM_UCA1TXD	eUSCI_A1 UART TXD (direction controlled by eUSCI – Output)	
	PM_UCA1SIMO	eUSCI_A1 SPI slave in master out (direction controlled by eUSCI)	
7	PM_UCA1CLK	eUSCI_A1 clock input/output (direction controlled by eUSCI)	
8	PM_UCA1STE	eUSCI_A1 SPI slave transmit enable (direction controlled by eUSCI)	
9	PM_UCA2RXD	eUSCI_A2 UART RXD (direction controlled by eUSCI – Input)	
	PM_UCA2SOMI	eUSCI_A2 SPI slave out master in (direction controlled by eUSCI)	
10	PM_UCA2TXD	eUSCI_A2 UART TXD (direction controlled by eUSCI – Output)	
	PM_ UCA2SIMO	eUSCI_A2 SPI slave in master out (direction controlled by eUSCI)	
11	PM_UCA2CLK	eUSCI_A2 clock input/output (direction controlled by eUSCI)	
12	PM_UCA2STE	eUSCI_A2 SPI slave transmit enable (direction controlled by eUSCI)	
13	PM_UCB0SIMO	eUSCI_B0 SPI slave in master out (direction controlled by eUSCI)	
	PM_UCB0SDA	eUSCI_B0 I2C data (open drain and direction controlled by eUSCI)	
14	PM_UCB0SOMI	eUSCI_B0 SPI slave out master in (direction controlled by eUSCI)	
	PM_UCB0SCL	eUSCI_B0 I2C clock (open drain and direction controlled by eUSCI)	
15	PM_UCB0CLK	eUSCI_B0 clock input/output (direction controlled by eUSCI)	
16	PM_UCB0STE	eUSCI_B0 SPI slave transmit enable (direction controlled by eUSCI)	
17	PM_TA0.0	TA0 CCR0 capture input CCI0A	TA0 CCR0 compare output Out0
18	PM_TA0.1	TA0 CCR1 capture input CCI1A	TA0 CCR1 compare output Out1
19	PM_TA0.2	TA0 CCR2 capture input CCI2A	TA0 CCR2 compare output Out2
20	PM_TA1.0	TA1 CCR0 capture input CCI0A	TA1 CCR0 compare output Out0
21	PM_TA1.1	TA1 CCR1 capture input CCI1A	TA1 CCR1 compare output Out1

版权 © 2015–2018, Texas Instruments Incorporated

表 6-7. Port Mapping Mnemonics and Functions (continued)

VALUE	PxMAPy MNEMONIC	INPUT PIN FUNCTION	OUTPUT PIN FUNCTION
22	PM_TA2.0	TA2 CCR0 capture input CCI0A	TA2 CCR0 compare output Out0
23	PM_TA2.1	TA2 CCR1 capture input CCI1A	TA2 CCR1 compare output Out1
24	PM_TA3.0	TA3 CCR0 capture input CCI0A	TA3 CCR0 compare output Out0
25	PM_TA3.1	TA3 CCR1 capture input CCI1A	TA3 CCR1 compare output Out1
26	PM_TACLK	Timer_A clock input to TA0, TA1, TA2, TA3	None
	PM_RTCCLK	None	RTC_C clock output
27	PM_SDCLK	SD24_B bit stream clock input/output (direction controlled by SD24_B)	
28	PM_SD0DIO	SD24_B converter 0 bit stream data input/output (direction controlled by SD24_B)	
29	PM_SD1DIO	SD24_B converter 1 bit stream data input/output (direction controlled by SD24_B)	
30	PM_SD2DIO	SD24_B converter 2 bit stream data input/output (direction controlled by SD24_B)	
31 (0FFh) (1)	PM_ANALOG	Disables the output driver and the input Schmitt-trigger to prevent parasitic cross currents when applying analog signals.	

(1) The value of the PM_ANALOG mnemonic is set to 0FFh. The port mapping registers are only 5 bits wide, and the upper bits are ignored, which results in a read value of 31.

表 6-8. Default Mapping

PIN NAME		PxMAPy MNEMONIC	INPUT PIN FUNCTION	OUTPUT PIN FUNCTION
PZ	PN			
P1.0/PM_TA0.0/ VeREF-/A2	P1.0/PM_TA0.0/ VeREF-/A2	PM_TA0.0	TA0 CCR0 capture input CCI0A	TA0 CCR0 compare output Out0
P1.1/PM_TA0.1/ VeREF+/A1	P1.1/PM_TA0.1/ VeREF+/A1	PM_TA0.1	TA0 CCR1 capture input CCI1A	TA0 CCR1 compare output Out1
P1.2/PM_UCA0RXD/ PM_UCA0SOMI/A0	P1.2/PM_UCA0RXD/ PM_UCA0SOMI/A0	PM_UCA0RXD, PM_UCA0SOMI	eUSCI_A0 UART RXD (direction controlled by eUSCI – input), eUSCI_A0 SPI slave out master in (direction controlled by eUSCI)	
P1.3/PM_UCA0TXD/ PM_UCA0SIMO/R03	P1.3/PM_UCA0TXD/ PM_UCA0SIMO/R03	PM_UCA0TXD, PM_UCA0SIMO	eUSCI_A0 UART TXD (direction controlled by eUSCI – output), eUSCI_A0 SPI slave in master out (direction controlled by eUSCI)	
P1.4/PM_UCA1RXD/ PM_UCA1SOMI/ LCDREF/R13	P1.4/PM_UCA1RXD/ PM_UCA1SOMI/ LCDREF/R13	PM_UCA1RXD, PM_UCA1SOMI	eUSCI_A1 UART RXD (direction controlled by eUSCI – input), eUSCI_A1 SPI slave out master in (direction controlled by eUSCI)	
P1.5/PM_UCA1TXD/ PM_UCA1SIMO/R23	P1.5/PM_UCA1TXD/ PM_UCA1SIMO/R23	PM_UCA1TXD, PM_UCA1SIMO	eUSCI_A1 UART TXD (direction controlled by eUSCI – output), eUSCI_A1 SPI slave in master out (direction controlled by eUSCI)	
P1.6/PM_UCA0CLK/ COM4	P1.6/PM_UCA0CLK/ COM4	PM_UCA0CLK	eUSCI_A0 clock input/output (direction controlled by eUSCI)	
P1.7/PM_UCB0CLK/ COM5	P1.7/PM_UCB0CLK/ COM5	PM_UCB0CLK	eUSCI_B0 clock input/output (direction controlled by eUSCI)	
P2.0/PM_UCB0SOMI/ PM_UCB0SCL/COM6	P2.0/PM_UCB0SOMI/ PM_UCB0SCL/COM6/S39	PM_UCB0SOMI, PM_UCB0SCL	eUSCI_B0 SPI slave out master in (direction controlled by eUSCI), eUSCI_B0 I2C clock (open drain and direction controlled by eUSCI)	
P2.1/PM_UCB0SIMO/ PM_UCB0SDA/COM7	P2.1/PM_UCB0SIMO/ PM_UCB0SDA/COM7/S38	PM_UCB0SIMO, PM_UCB0SDA	eUSCI_B0 SPI slave in master out (direction controlled by eUSCI), eUSCI_B0 I2C data (open drain and direction controlled by eUSCI)	
P2.2/PM_UCA2RXD/ PM_UCA2SOMI	P2.2/PM_UCA2RXD/ PM_UCA2SOMI/S37	PM_UCA2RXD, PM_UCA2SOMI	eUSCI_A2 UART RXD (direction controlled by eUSCI – input), eUSCI_A2 SPI slave out master in (direction controlled by eUSCI)	
P2.3/PM_UCA2TXD/ PM_UCA2SIMO	P2.3/PM_UCA2TXD/ PM_UCA2SIMO/S36	PM_UCA2TXD, PM_UCA2SIMO	eUSCI_A2 UART TXD (direction controlled by eUSCI – output), eUSCI_A2 SPI slave in master out (direction controlled by eUSCI)	
P2.4/PM_UCA1CLK	P2.4/PM_UCA1CLK/S35	PM_UCA1CLK	eUSCI_A1 clock input/output (direction controlled by eUSCI)	

表 6-8. Default Mapping (continued)

PIN NAME		PxMAPy MNEMONIC	INPUT PIN FUNCTION	OUTPUT PIN FUNCTION
PZ	PN			
P2.5/PM_UCA2CLK	P2.5/PM_UCA2CLK/S34	PM_UCA2CLK	eUSCI_A2 clock input/output (direction controlled by eUSCI)	
P2.6/PM_TA1.0	P2.6/PM_TA1.0/S33	PM_TA1.0	TA1 CCR0 capture input CCI0A	TA1 CCR0 compare output Out0
P2.7/PM_TA1.1	P2.7/PM_TA1.1/S32	PM_TA1.1	TA1 CCR1 capture input CCI1A	TA1 CCR1 compare output Out1
P3.0/PM_TA2.0	P3.0/PM_TA2.0/S31	PM_TA2.0	TA2 CCR0 capture input CCI0A	TA2 CCR0 compare output Out0
P3.1/PM_TA2.1	P3.1/PM_TA2.1/S30	PM_TA2.1	TA2 CCR1 capture input CCI1A	TA2 CCR1 compare output Out1
P3.2/PM_TACLK/ PM_RTCCLK	P3.2/PM_TACLK/ PM_RTCCLK/S29	PM_TACLK, PM_RTCCLK	Timer_A clock input to TA0, TA1, TA2, TA3	RTC_C clock output
P3.3/PM_TA0.2	P3.3/PM_TA0.2/S28	PM_TA0.2	TA0 CCR2 capture input CCI2A	TA0 CCR2 compare output Out2
P3.4/PM_SDCLK/S39	P3.4/PM_SDCLK/S27	PM_SDCLK	SD24_B bit stream clock input/output (direction controlled by SD24_B)	
P3.5/PM_SD0DIO/S38	P3.5/PM_SD0DIO/S26	PM_SD0DIO	SD24_B converter 0 bit stream data input/output (direction controlled by SD24_B)	
P3.6/PM_SD1DIO/S37	P3.6/PM_SD1DIO/S25	PM_SD1DIO	SD24_B converter 1 bit stream data input/output (direction controlled by SD24_B)	
P3.7/PM_SD2DIO/S36	P3.7/PM_SD2DIO/S24	PM_SD2DIO	SD24_B converter 2 bit stream data input/output (direction controlled by SD24_B)	

6.11.7 System Module (SYS)

The SYS module handles many of the system functions within the device. These include power-on reset (POR) and power-up clear (PUC) handling, NMI source selection and management, reset interrupt vector generators (see 表 6-9), bootloader entry mechanisms, and configuration management (device descriptors). It also includes a data exchange mechanism through JTAG called a JTAG mailbox that can be used in the application.

表 6-9. System Module Interrupt Vector Registers

INTERRUPT VECTOR REGISTER	INTERRUPT EVENT	WORD ADDRESS	OFFSET	PRIORITY
SYSRSTIV, System Reset	No interrupt pending	019Eh	00h	
	Brownout (BOR)		02h	Highest
	RST/NMI (POR)		04h	
	DoBOR (BOR)		06h	
	Wakeup from LPMx.5 (BOR)		08h	
	Security violation (BOR)		0Ah	
	SVSL (POR)		0Ch	
	SVSH (POR)		0Eh	
	SVML_OVP (POR)		10h	
	SVMH_OVP (POR)		12h	
	DoPOR (POR)		14h	
	WDT time-out (PUC)		16h	
	WDT key violation (PUC)		18h	
	KEYV flash key violation (PUC)		1Ah	
	Reserved		1Ch	
	Peripheral area fetch (PUC)		1Eh	
	PMM key violation (PUC)		20h	
	Reserved		22h to 3Eh	Lowest

版权 © 2015–2018, Texas Instruments Incorporated

表 6-9. System Module Interrupt Vector Registers (continued)

INTERRUPT VECTOR REGISTER	INTERRUPT EVENT	WORD ADDRESS	OFFSET	PRIORITY
SYSSNIV, System NMI	No interrupt pending	019Ch	00h	
	SVMLIFG		02h	Highest
	SVMHIFG		04h	
	DLYLIFG		06h	
	DLYHIFG		08h	
	VMAIFG		0Ah	
	JMBINIFG		0Ch	
	JMBOUTIFG		0Eh	
	VLRLIFG		10h	
	VLRHIFG		12h	
	Reserved		14h to 1Eh	Lowest
SYSUNIV, User NMI	No interrupt pending	019Ah	00h	
	NMIIFG		02h	Highest
	OFIFG		04h	
	ACCVIFG		06h	
	AUXSWNMIFG		08h	
	Reserved		0Ah to 1Eh	Lowest

6.11.8 Watchdog Timer (WDT_A)

The primary function of the WDT_A module is to perform a controlled system restart after a software problem occurs. If the selected time interval expires, a system reset is generated. If the watchdog function is not needed in an application, the timer can be configured as an interval timer and can generate interrupts at selected time intervals.

6.11.9 DMA Controller

The DMA controller allows movement of data from one memory address to another without CPU intervention. For example, the DMA controller can be used to move data from the ADC10_A conversion memory to RAM. Using the DMA controller can increase the throughput of peripheral modules. The DMA controller reduces system power consumption by allowing the CPU to remain in sleep mode, without having to awaken to move data to or from a peripheral. 表 6-10 lists the available DMA triggers.

表 6-10. DMA Trigger Assignments(1)

TRIGGER	CHANNEL		
	0	1	2
0	DMAREQ		
1	TA0CCR0 CCIFG		
2	TA0CCR2 CCIFG		
3	TA1CCR0 CCIFG		
4	Reserved		
5	TA2CCR0 CCIFG		
6	Reserved		
7	TA3CCR0 CCIFG		
8	Reserved		
9	Reserved		

(1) Reserved DMA triggers may be used by other devices in the family. Reserved DMA triggers do not cause any DMA trigger event when selected.

表 6-10. DMA Trigger Assignments[(1)] (continued)

TRIGGER	CHANNEL		
	0	1	2
10	Reserved		
11	Reserved		
12	Reserved		
13	SD24IFG		
14	Reserved		
15	Reserved		
16	UCA0RXIFG		
17	UCA0TXIFG		
18	UCA1RXIFG		
19	UCA1TXIFG		
20	UCA2RXIFG		
21	UCA2TXIFG		
22	UCB0RXIFG0		
23	UCB0TXIFG0		
24	ADC10IFG0		
25	Reserved		
26	Reserved		
27	Reserved		
28	Reserved		
29	MPY ready		
30	DMA2IFG	DMA0IFG	DMA1IFG
31	Reserved		

6.11.10 CRC16

The CRC16 module produces a signature based on a sequence of entered data values and can be used for data checking purposes. The CRC16 module signature is based on the CRC-CCITT standard.

6.11.11 Hardware Multiplier

The multiplication operation is supported by a dedicated peripheral module. The module performs operations with 32-, 24-, 16-, and 8-bit operands. The module supports signed and unsigned multiplication as well as signed and unsigned multiply-and-accumulate operations.

6.11.12 Enhanced Universal Serial Communication Interface (eUSCI)

The eUSCI module is used for serial data communication. The eUSCI module supports synchronous communication protocols such as SPI (3- or 4-pin) and I^2C, and asynchronous communication protocols such as UART, enhanced UART with automatic baud-rate detection, and IrDA.

The eUSCI_An module supports for SPI (3- or 4-pin), UART, enhanced UART, or IrDA.

The eUSCI_Bn module supports for SPI (3- or 4-pin) or I^2C.

Three eUSCI_A and one eUSCI_B module are implemented.

6.11.13 ADC10_A

The ADC10_A module supports fast 10-bit analog-to-digital conversions. The module implements a 10-bit SAR core, sample select control, reference generator, and a conversion results buffer. A window comparator with a lower and upper limit allows CPU independent result monitoring with three window comparator interrupt flags.

版权 © 2015–2018, Texas Instruments Incorporated

6.11.14 SD24_B

The SD24_B module integrates up to three independent 24-bit sigma-delta analog-to-digital converters. Each converter is designed with a fully differential analog input pair and programmable gain amplifier input stage. The converters are based on second-order over-sampling sigma-delta modulators and digital decimation filters. The decimation filters are comb-type filters with selectable oversampling ratios of up to 1024.

6.11.15 TA0

TA0 is a 16-bit timer/counter (Timer_A type) with three capture/compare registers. TA0 can support multiple capture/compares, PWM outputs, and interval timing (see 表 6-11). TA0 also has extensive interrupt capabilities. Interrupts may be generated from the counter on overflow conditions and from each of the capture/compare registers.

表 6-11. TA0 Signal Connections

DEVICE INPUT SIGNAL	MODULE INPUT NAME	MODULE BLOCK	MODULE OUTPUT SIGNAL	DEVICE OUTPUT SIGNAL
PM_TACLK	TACLK	Timer	NA	NA
ACLK (internal)	ACLK			
SMCLK (internal)	SMCLK			
PM_TACLK	INCLK			
PM_TA0.0	CCI0A	CCR0	TA0	PM_TA0.0
DVSS	CCI0B			
DVSS	GND			
DVCC	VCC			
PM_TA0.1	CCI1A	CCR1	TA1	PM_TA0.1
ACLK (internal)	CCI1B			ADC10_A (internal) ADC10SHSx = {1}
DVSS	GND			SD24_B (internal) SD24SCSx = {1}
DVCC	VCC			
PM_TA0.2	CCI2A	CCR2	TA2	PM_TA0.2
DVSS	CCI2B			
DVSS	GND			
DVCC	VCC			

6.11.16 TA1

TA1 is a 16-bit timer/counter (Timer_A type) with two capture/compare registers. TA1 can support multiple capture/compares, PWM outputs, and interval timing (see 表 6-12). TA1 also has extensive interrupt capabilities. Interrupts may be generated from the counter on overflow conditions and from each of the capture/compare registers.

表 6-12. TA1 Signal Connections

DEVICE INPUT SIGNAL	MODULE INPUT NAME	MODULE BLOCK	MODULE OUTPUT SIGNAL	DEVICE OUTPUT SIGNAL
				PZ
PM_TACLK	TACLK	Timer	NA	NA
ACLK (internal)	ACLK			
SMCLK (internal)	SMCLK			
PM_TACLK	INCLK			
PM_TA1.0	CCI0A	CCR0	TA0	PM_TA1.0
DVSS	CCI0B			
DVSS	GND			
DVCC	VCC			
PM_TA1.1	CCI1A	CCR1	TA1	PM_TA1.1
ACLK (internal)	CCI1B			
DVSS	GND			
DVCC	VCC			

6.11.17 TA2

TA2 is a 16-bit timer/counter (Timer_A type) with two capture/compare registers. TA2 can support multiple capture/compares, PWM outputs, and interval timing (see 表 6-13). TA2 also has extensive interrupt capabilities. Interrupts may be generated from the counter on overflow conditions and from each of the capture/compare registers.

表 6-13. TA2 Signal Connections

DEVICE INPUT SIGNAL	MODULE INPUT NAME	MODULE BLOCK	MODULE OUTPUT SIGNAL	DEVICE OUTPUT SIGNAL
PM_TACLK	TACLK	Timer	NA	NA
ACLK (internal)	ACLK			
SMCLK (internal)	SMCLK			
PM_TACLK	INCLK			
PM_TA2.0	CCI0A	CCR0	TA0	PM_TA2.0
DVSS	CCI0B			
DVSS	GND			
DVCC	VCC			
PM_TA2.1	CCI1A	CCR1	TA1	PM_TA2.1
ACLK (internal)	CCI1B			SD24_B (internal) SD24SCSx = {2}
DVSS	GND			
DVCC	VCC			

版权 © 2015–2018, Texas Instruments Incorporated

6.11.18 TA3

TA3 is a 16-bit timer/counter (Timer_A type) with two capture/compare registers. TA3 can support multiple capture/compares, PWM outputs, and interval timing (see 表 6-14). TA3 also has extensive interrupt capabilities. Interrupts may be generated from the counter on overflow conditions and from each of the capture/compare registers.

表 6-14. TA3 Signal Connections

DEVICE INPUT SIGNAL	MODULE INPUT NAME	MODULE BLOCK	MODULE OUTPUT SIGNAL	DEVICE OUTPUT SIGNAL
PM_TACLK	TACLK	Timer	NA	
ACLK (internal)	ACLK			
SMCLK (internal)	SMCLK			
PM_TACLK	INCLK			
PM_TA3.0	CCI0A	CCR0	TA0	PM_TA3.0
DVSS	CCI0B			ADC10_A (internal) ADC10SHSx = {2}
DVSS	GND			
DVCC	VCC			
PM_TA3.1	CCI1A	CCR1	TA1	PM_TA3.1
ACLK (internal)	CCI1B			SD24_B (internal) SD24SCSx = {3}
DVSS	GND			
DVCC	VCC			

6.11.19 SD24_B Triggers

表 6-15 lists the input trigger connections to SD24_B converters from Timer_A modules and the output trigger pulse connection from SD24_B to ADC10_A.

表 6-15. SD24_B Input/Output Trigger Connections

DEVICE INPUT SIGNAL	MODULE INPUT SIGNAL	MODULE BLOCK	MODULE OUTPUT SIGNAL	DEVICE OUTPUT SIGNAL
TA0.1 (internal)	SD24_B SD24SCSx = {1}	SD24_B	Trigger Pulse	ADC10_A (internal) ADC10SHSx = {3}
TA2.1 (internal)	SD24_B SD24SCSx = {2}			
TA3.1 (internal)	SD24_B SD24SCSx = {3}			

6.11.20 ADC10_A Triggers

表 6-16 lists the input trigger connections to ADC10_A from Timer_A modules and SD24_B.

表 6-16. ADC10_A Input Trigger Connections

DEVICE INPUT SIGNAL	MODULE INPUT SIGNAL	MODULE BLOCK
TA0.1 (internal)	ADC10_A ADC10SHSx = {1}	ADC10_A
TA3.0 (internal)	ADC10_A ADC10SHSx = {2}	

6.11.21 Real-Time Clock (RTC_C)

The RTC_C module can be configured for real-time clock or calendar mode that provides seconds, hours, day of week, day of month, month, and year. The RTC_C control and configuration registers are password-protected to ensure clock integrity against runaway code. Calendar mode integrates an internal calendar that compensates for months with less than 31 days and includes leap year correction. The RTC_C also supports flexible alarm functions, offset calibration, and temperature compensation. The RTC_C on this device operates on dedicated AUXVCC3 supply and supports operation in LPM3.5.

6.11.22 Reference (REF) ModuleVoltage Reference

The REF is responsible for generation of all critical reference voltages that can be used by the various analog peripherals in the device. These include the ADC10_A, LCD_C, and SD24_B modules.

6.11.23 LCD_C

The LCD_C driver generates the segment and common signals required to drive a segment liquid crystal display (LCD). The LCD_C controller has dedicated data memories to hold segment drive information. Common and segment signals are generated as defined by the mode. Static, 2-mux, 3-mux, 4-mux, up to 8-mux LCDs are supported. The module can provide a LCD voltage independent of the supply voltage with its integrated charge pump. It is possible to control the level of the LCD voltage, and thus contrast, by software. The module also provides an automatic blinking capability for individual segments in static, 2-mux, 3-mux, and 4-mux modes.

6.11.24 Embedded Emulation Module (EEM) (S Version)

The EEM supports real-time in-system debugging. The S version of the EEM has the following features:

- Three hardware triggers or breakpoints on memory access
- One hardware trigger or breakpoint on CPU register write access
- Up to four hardware triggers can be combined to form complex triggers or breakpoints
- One cycle counter
- Clock control on module level

版权 © 2015–2018, Texas Instruments Incorporated

6.12 Input/Output Diagrams

6.12.1 Port P1 (P1.0 and P1.1) Input/Output With Schmitt Trigger (MSP430F67xxAIPZ and MSP430F67xxAIPN)

图 6-2 shows the port diagram. 表 6-17 summarizes the selection of the pin functions.

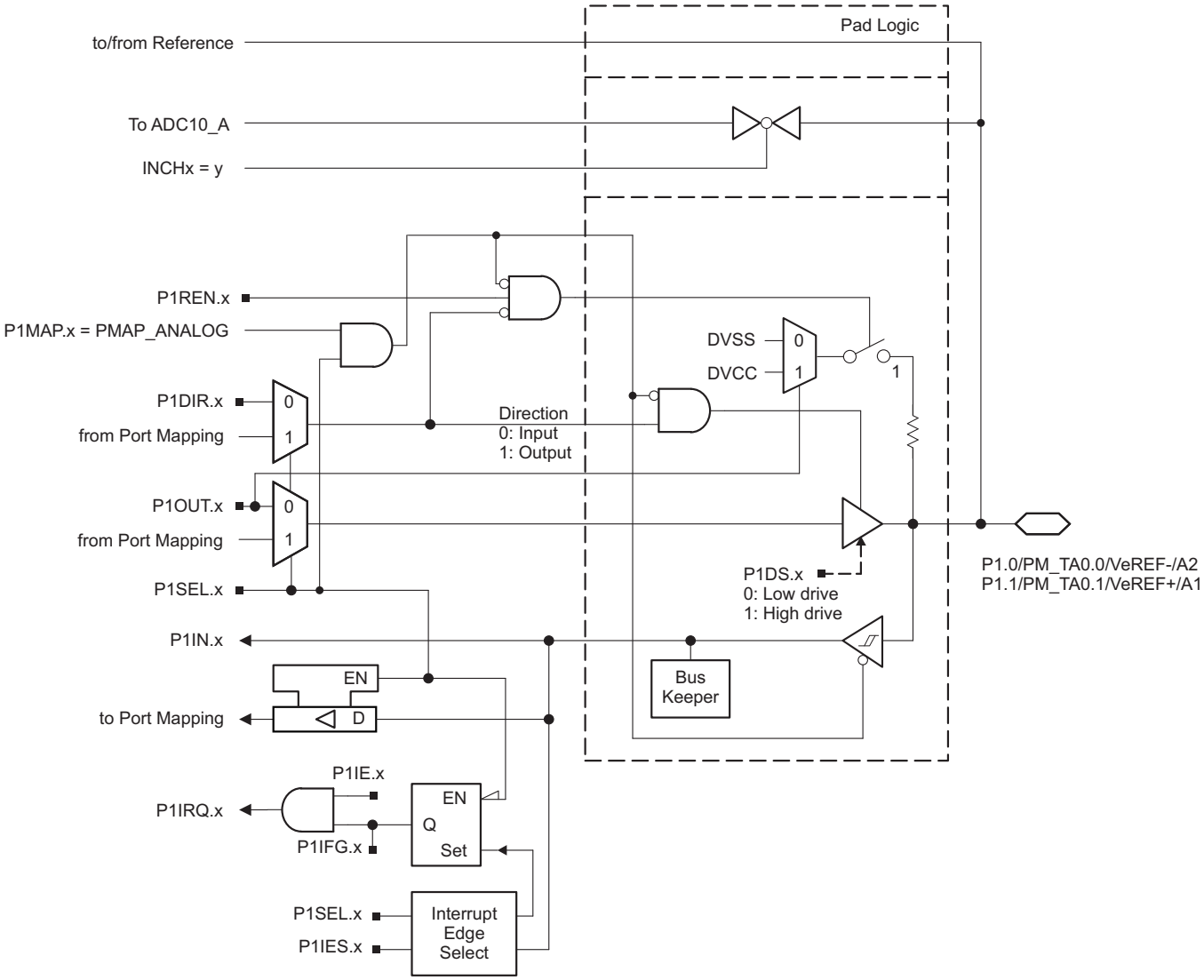

图 6-2. Port P1 (P1.0 and P1.1) Diagram (MSP430F67xxAIPZ and MSP430F67xxAIPN)

表 6-17. Port P1 (P1.0 and P1.1) Pin Functions (MSP430F67xxAIPZ and MSP430F67xxAIPN)

PIN NAME (P1.x)	x	FUNCTION	CONTROL BITS OR SIGNALS (1)		
			P1DIR.x	P1SEL.x	P1MAPx
P1.0/PM_TA0.0/ VeREF-/A2	0	P1.0 (I/O)	I: 0; O: 1	0	X
		TA0.CCI0A	0	1	default
		TA0.TA0	1	1	default
		VeREF-/A2 (2)	X	1	= 31
P1.1/PM_TA0.1/ VeREF+/A1	1	P1.1 (I/O)	I: 0; O: 1	0	X
		TA0.CCI1A	0	1	default
		TA0.TA1	1	1	default
		VeREF+/A1 (2)	X	1	= 31

(1) X = Don't care
(2) Setting P1SEL.x bit together with P1MAPx = PM_ANALOG disables the output driver and the input Schmitt trigger.

版权 © 2015–2018, Texas Instruments Incorporated

6.12.2 Port P1 (P1.2) Input/Output With Schmitt Trigger (MSP430F67xxAIPZ and MSP430F67xxAIPN)

图 6-3 shows the port diagram. 表 6-18 summarizes the selection of the pin functions.

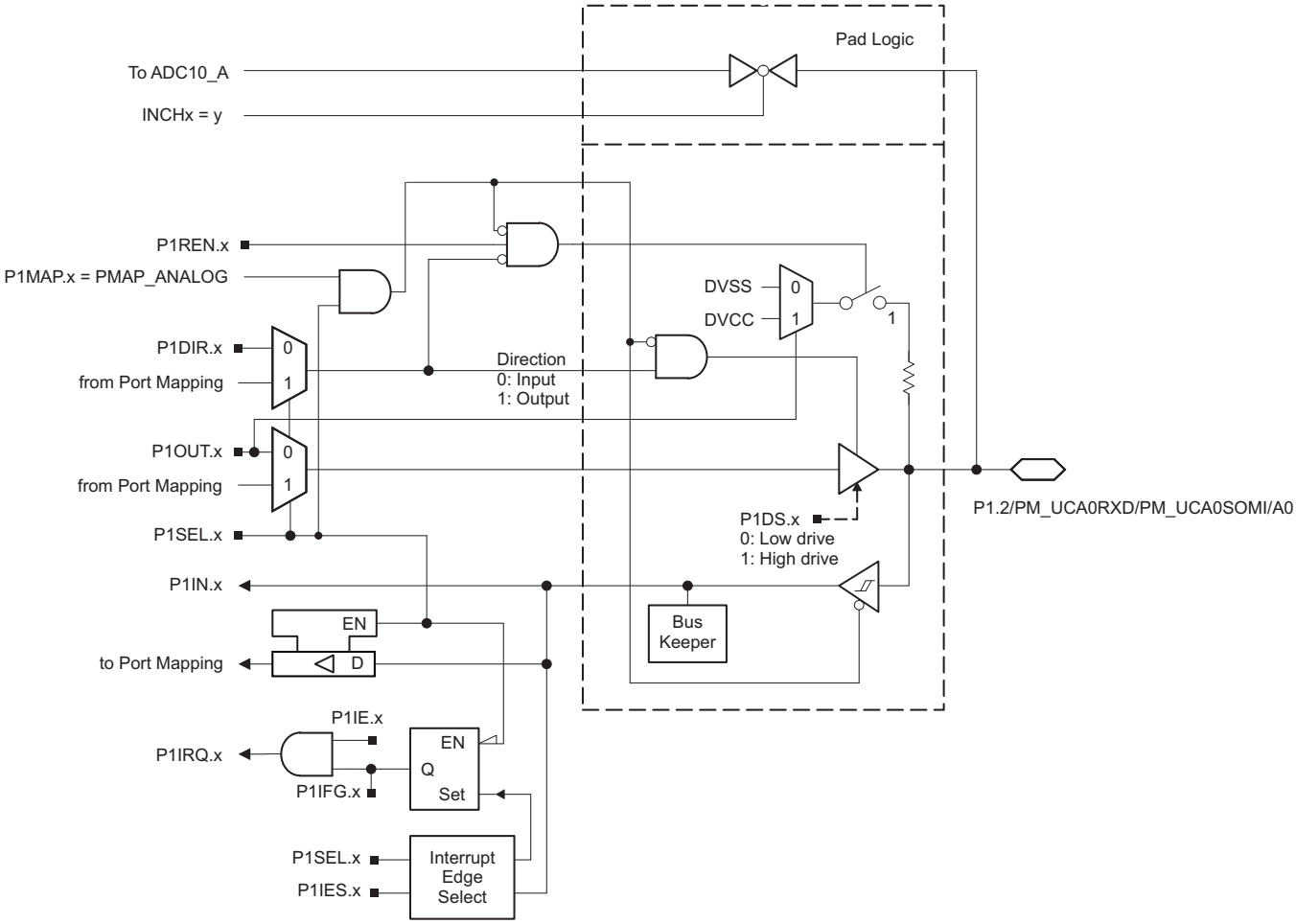

图 6-3. Port P1 (P1.2) Diagram (MSP430F67xxAIPZ and MSP430F67xxAIPN)

表 6-18. Port P1 (P1.2) Pin Functions (MSP430F67xxAIPZ and MSP430F67xxAIPN)

PIN NAME (P1.x)	x	FUNCTION	CONTROL BITS OR SIGNALS(1)		
			P1DIR.x	P1SEL.x	P1MAPx
P1.2/PM_UCA0RXD/ PM_UCA0SOMI/A0	2	P1.2 (I/O)	I: 0; O: 1	0	X
		UCA0RXD/UCA0SOMI	X	1	default
		A0(2)	X	1	= 31

(1) X = Don't care
(2) Setting P1SEL.x bit together with P1MAPx = PM_ANALOG disables the output driver and the input Schmitt trigger.

6.12.3 Port P1 (P1.3 to P1.5) Input/Output With Schmitt Trigger (MSP430F67xxAIPZ and MSP430F67xxAIPN)

图 6-4 shows the port diagram. 表 6-19 summarizes the selection of the pin functions.

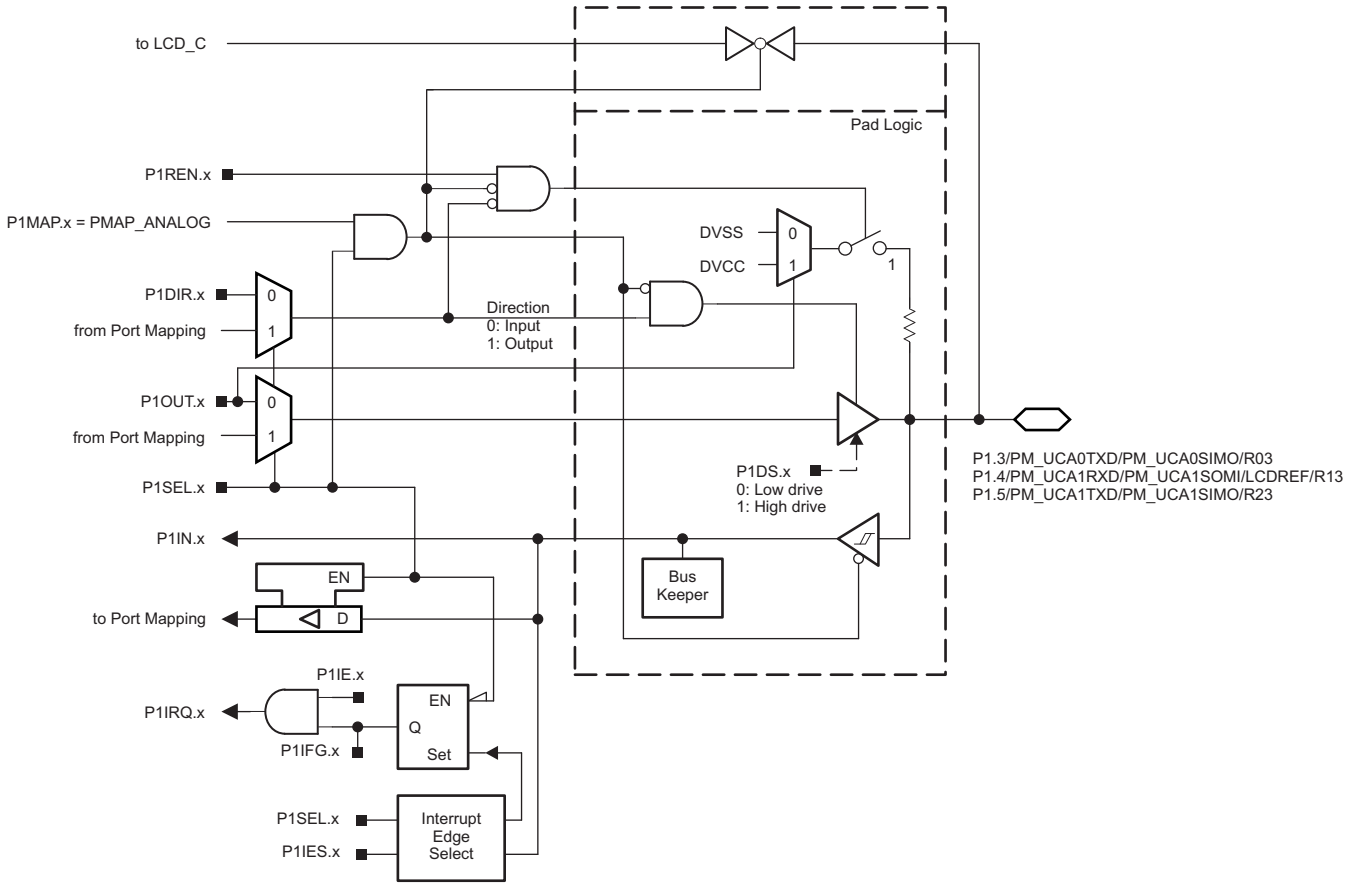

图 6-4. Port P1 (P1.3 to P1.5) Diagram (MSP430F67xxAIPZ and MSP430F67xxAIPN)

表 6-19. Port P1 (P1.3 to P1.5) Pin Functions (MSP430F67xxAIPZ and MSP430F67xxAIPN)

PIN NAME (P1.x)	x	FUNCTION	CONTROL BITS OR SIGNALS(1)		
			P1DIR.x	P1SEL.x	P1MAPx
P1.3/PM_UCA0TXD/ PM_UCA0SIMO/R03	3	P1.3 (I/O)	I: 0; O: 1	0	X
		UCA0TXD/UCA0SIMO	X	1	default
		R03(2)	X	1	= 31
P1.4/PM_UCA1RXD/ PM_UCA1SOMI/ LCDREF/R13	4	P1.4 (I/O)	I: 0; O: 1	0	X
		UCA1RXD/UCA1SOMI	X	1	default
		LCDREF/R13(2)	X	1	= 31
P1.5/PM_UCA1TXD/ PM_UCA1SIMO/R23	5	P1.5 (I/O)	I: 0; O: 1	0	X
		UCA1TXD/UCA1SIMO	X	1	default
		R23(2)	X	1	= 31

(1) X = Don't care
(2) Setting P1SEL.x bit together with P1MAPx = PM_ANALOG disables the output driver and the input Schmitt trigger.

版权 © 2015–2018, Texas Instruments Incorporated

6.12.4 Port P1 (P1.6 and P1.7) (MSP430F67xxAIPZ and MSP430F67xxAIPN) and Port P2 (P2.0 and P2.1) (MSP430F67xxAIPZ Only) Input/Output With Schmitt Trigger

图 6-5 shows the port diagram. 表 6-20 and 表 6-21 summarize the selection of the pin functions.

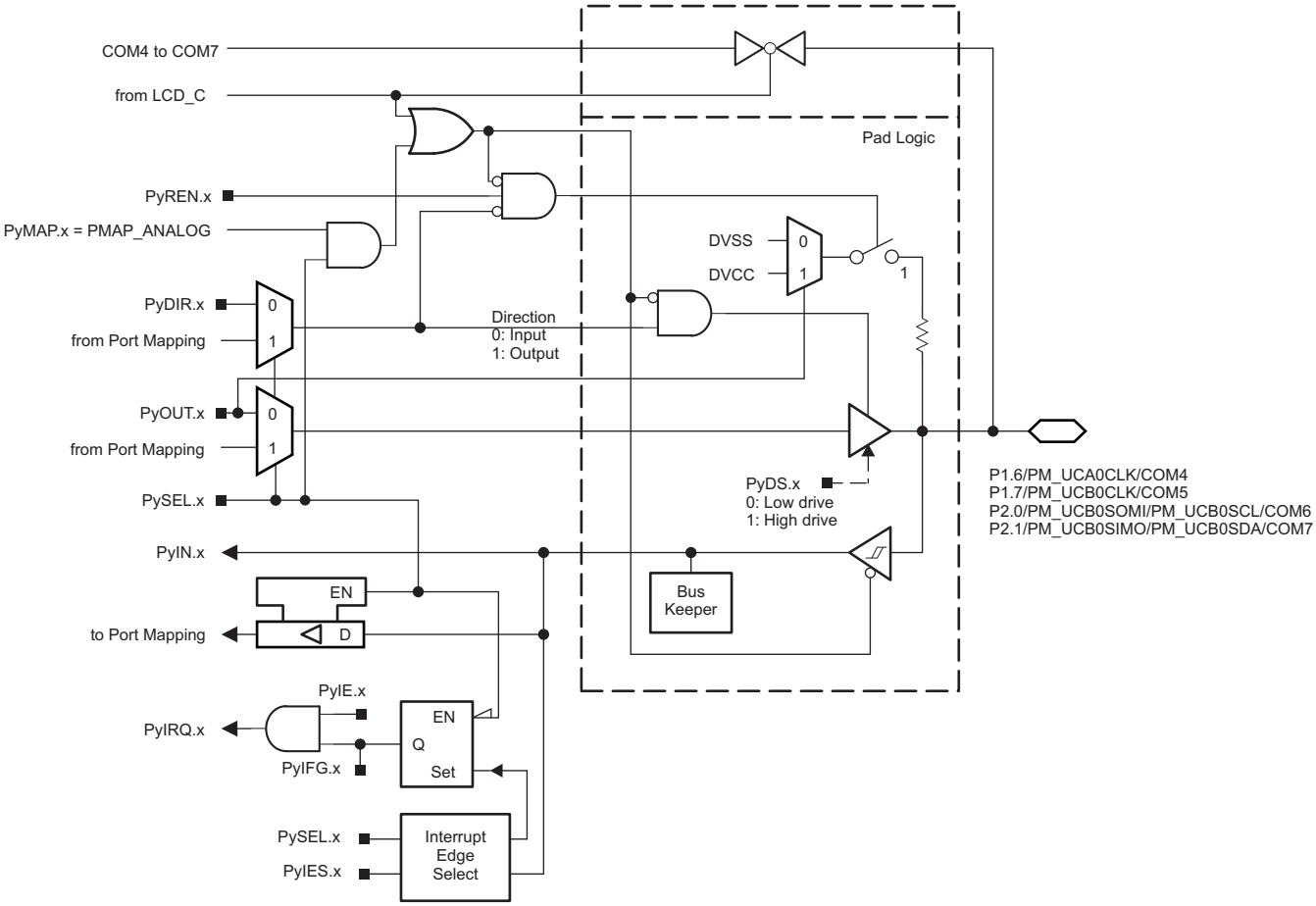

图 6-5. Port P1 (P1.6 and P1.7) (MSP430F67xxAIPZ and MSP430F67xxAIPN), Port P2 (P2.0 and P2.1) (MSP430F67xxAIPZ Only) Diagram

表 6-20. Port P1 (P1.6 and P1.7) Pin Functions (MSP430F67xxAIPZ and MSP430F67xxAIPN)

PIN NAME (P1.x)	x	FUNCTION	CONTROL BITS OR SIGNALS(1)			
			P1DIR.x	P1SEL.x	P1MAPx	COM4, COM5 Enable Signal
P1.6/PM_UCA0CLK/COM4	6	P1.6 (I/O)	I: 0; O: 1	0	X	0
		UCA0CLK	X	1	default	0
		Output driver and input Schmitt trigger disabled	X	1	= 31	0
		COM4	X	X	X	1
P1.7/PM_UCB0CLK/COM5	7	P1.7 (I/O)	I: 0; O: 1	0	X	0
		UCB0CLK	X	1	default	0
		Output driver and input Schmitt trigger disabled	X	1	= 31	0
		COM5	X	X	X	1

(1) X = Don't care

表 6-21. Port P2 (P2.0 and P2.1) Pin Functions (MSP430F67xxAIPZ Only)

PIN NAME (P2.x)	x	FUNCTION	CONTROL BITS OR SIGNALS(1)			
			P2DIR.x	P2SEL.x	P2MAPx	COM6, COM7 Enable Signal
P2.0/PM_UCB0SOMI/ PM_UCB0SCL/COM6	0	P2.0 (I/O)	I: 0; O: 1	0	X	0
		UCB0SOMI/UCB0SCL	X	1	default	0
		Output driver and input Schmitt trigger disabled	X	1	= 31	0
		COM6	X	X	X	1
P2.1/PM_UCB0SIMO/ PM_UCB0SDA/COM7	1	P2.1 (I/O)	I: 0; O: 1	0	X	0
		UCB0SIMO/UCB0SDA	X	1	default	0
		Output driver and input Schmitt trigger disabled	X	1	= 31	0
		COM7	X	X	X	1

(1) X = Don't care

版权 © 2015–2018, Texas Instruments Incorporated

6.12.5 Port P2 (P2.2 to P2.7) Input/Output With Schmitt Trigger (MSP430F67xxAIPZ Only)

图 6-6 shows the port diagram. 表 6-22 summarizes the selection of the pin functions.

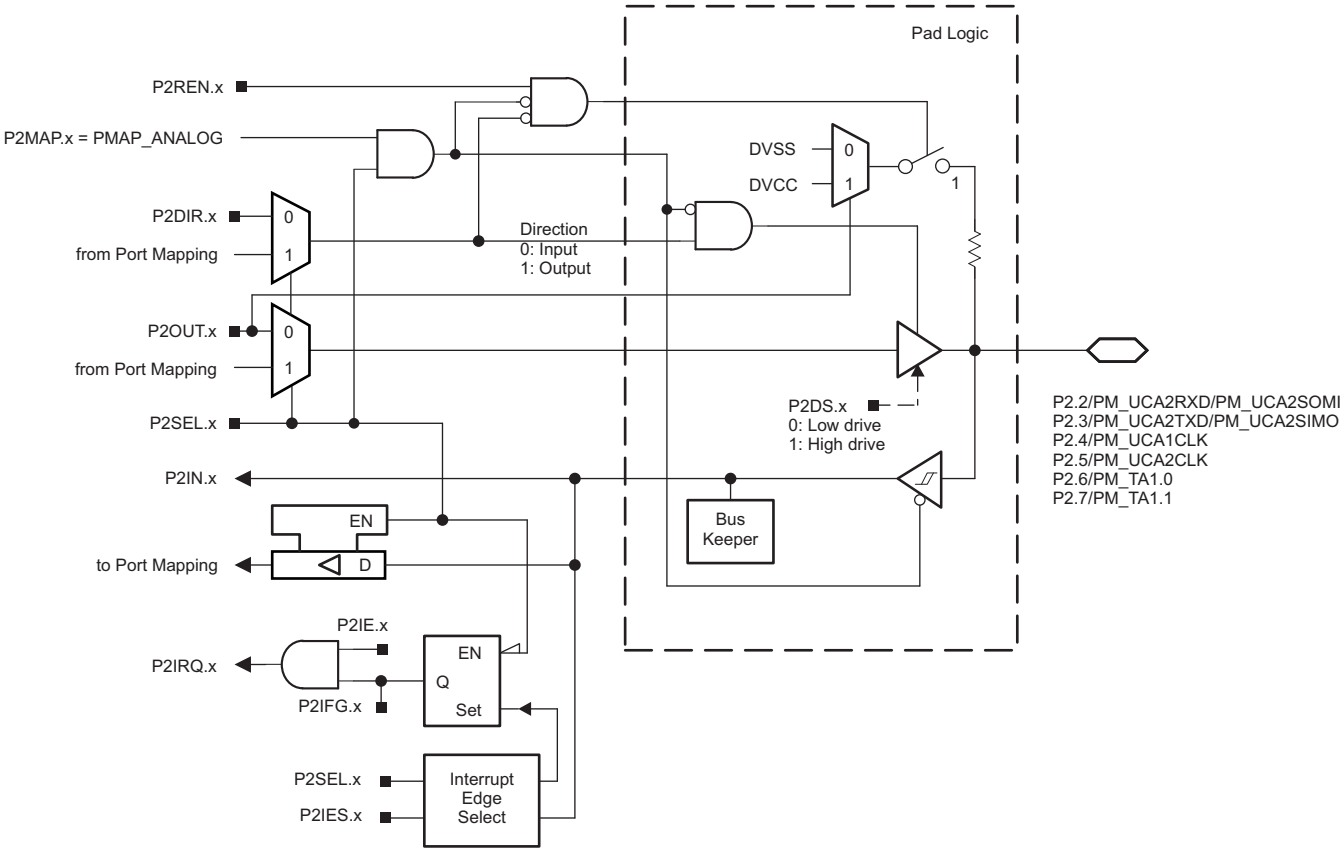

图 6-6. Port P2 (P2.2 to P2.7) Diagram (MSP430F67xxAIPZ Only)

表 6-22. Port P2 (P2.2 to P2.7) Pin Functions (MSP430F67xxAIPZ Only)

PIN NAME (P2.x)	x	FUNCTION	CONTROL BITS OR SIGNALS(1)		
			P2DIR.x	P2SEL.x	P2MAPx
P2.2/PM_UCA2RXD/ PM_UCA2SOMI	2	P2.2 (I/O)	I: 0; O: 1	0	X
		UCA2RXD/UCA2SOMI	X	1	default
		Output driver and input Schmitt trigger disabled	X	1	= 31
P2.3/PM_UCA2TXD/ PM_UCA2SIMO	3	P2.3 (I/O)	I: 0; O: 1	0	X
		UCA2TXD/UCA2SIMO	X	1	default
		Output driver and input Schmitt trigger disabled	X	1	= 31
P2.4/PM_UCA1CLK	4	P2.4 (I/O)	I: 0; O: 1	0	X
		UCA1CLK	X	1	default
		Output driver and input Schmitt trigger disabled	X	1	= 31
P2.5/PM_UCA2CLK	5	P2.5 (I/O)	I: 0; O: 1	0	X
		UCA2CLK	X	1	default
		Output driver and input Schmitt trigger disabled	X	1	= 31
P2.6/PM_TA1.0	6	P2.6 (I/O)	I: 0; O: 1	0	X
		TA1.CC10A	0	1	default
		TA1.TA0	1	1	default
		Output driver and input Schmitt trigger disabled	X	1	= 31
P2.7/PM_TA1.1	7	P2.7 (I/O)	I: 0; O: 1	0	X
		TA1.CCI1A	0	1	default
		TA1.TA1	1	1	default
		Output driver and input Schmitt trigger disabled	X	1	= 31

(1) X = Don't care

版权 © 2015–2018, Texas Instruments Incorporated

6.12.6 Port P3 (P3.0 to P3.3) Input/Output With Schmitt Trigger (MSP430F67xxAIPZ Only)

图 6-7 shows the port diagram. 表 6-23 summarizes the selection of the pin functions.

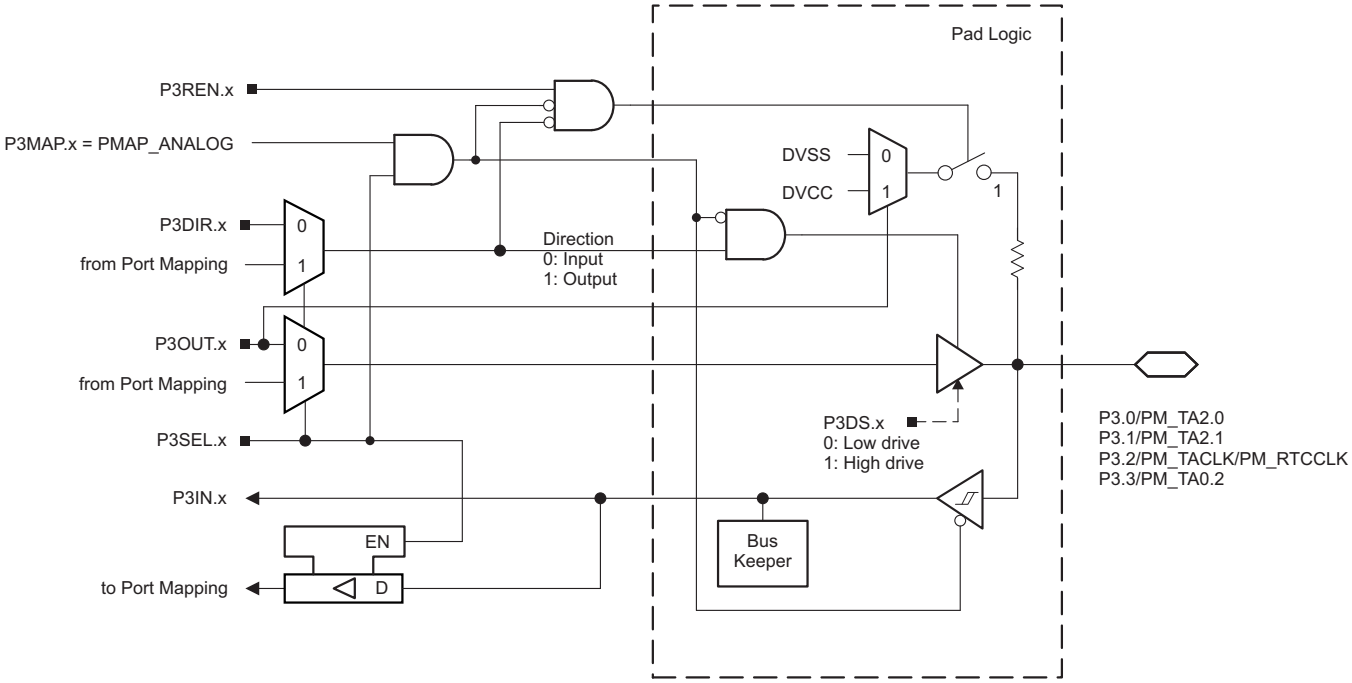

图 6-7. Port P3 (P3.0 to P3.3) Diagram (MSP430F67xxAIPZ Only)

表 6-23. Port P3 (P3.0 to P3.3) Pin Functions (MSP430F67xxAIPZ Only)

PIN NAME (P3.x)	x	FUNCTION	CONTROL BITS OR SIGNALS(1)		
			P3DIR.x	P3SEL.x	P3MAPx
P3.0/PM_TA2.0	0	P3.0 (I/O)	I: 0; O: 1	0	X
		TA2.CC10A	0	1	default
		TA2.TA0	1	1	default
		Output driver and input Schmitt trigger disabled	X	1	= 31
P3.1/PM_TA2.1	1	P3.1 (I/O)	I: 0; O: 1	0	X
		TA2.CCI1A	0	1	default
		TA2.TA1	1	1	default
		Output driver and input Schmitt trigger disabled	X	1	= 31
P3.2/PM_TACLK/ PM_RTCCLK	2	P3.2 (I/O)	I: 0; O: 1	0	X
		TACLK	0	1	default
		RTCCLK	1	1	default
		Output driver and input Schmitt trigger disabled	X	1	= 31
P3.3/PM_TA0.2	3	P3.3 (I/O)	I: 0; O: 1	0	X
		TA0.CCI2A	0	1	default
		TA0.TA2	1	1	default
		Output driver and input Schmitt trigger disabled	X	1	= 31

(1) X = Don't care

6.12.7 Port P3 (P3.4 to P3.7) Input/Output With Schmitt Trigger (MSP430F67xxAIPZ Only)

图 6-8 shows the port diagram. 表 6-24 summarizes the selection of the pin functions.

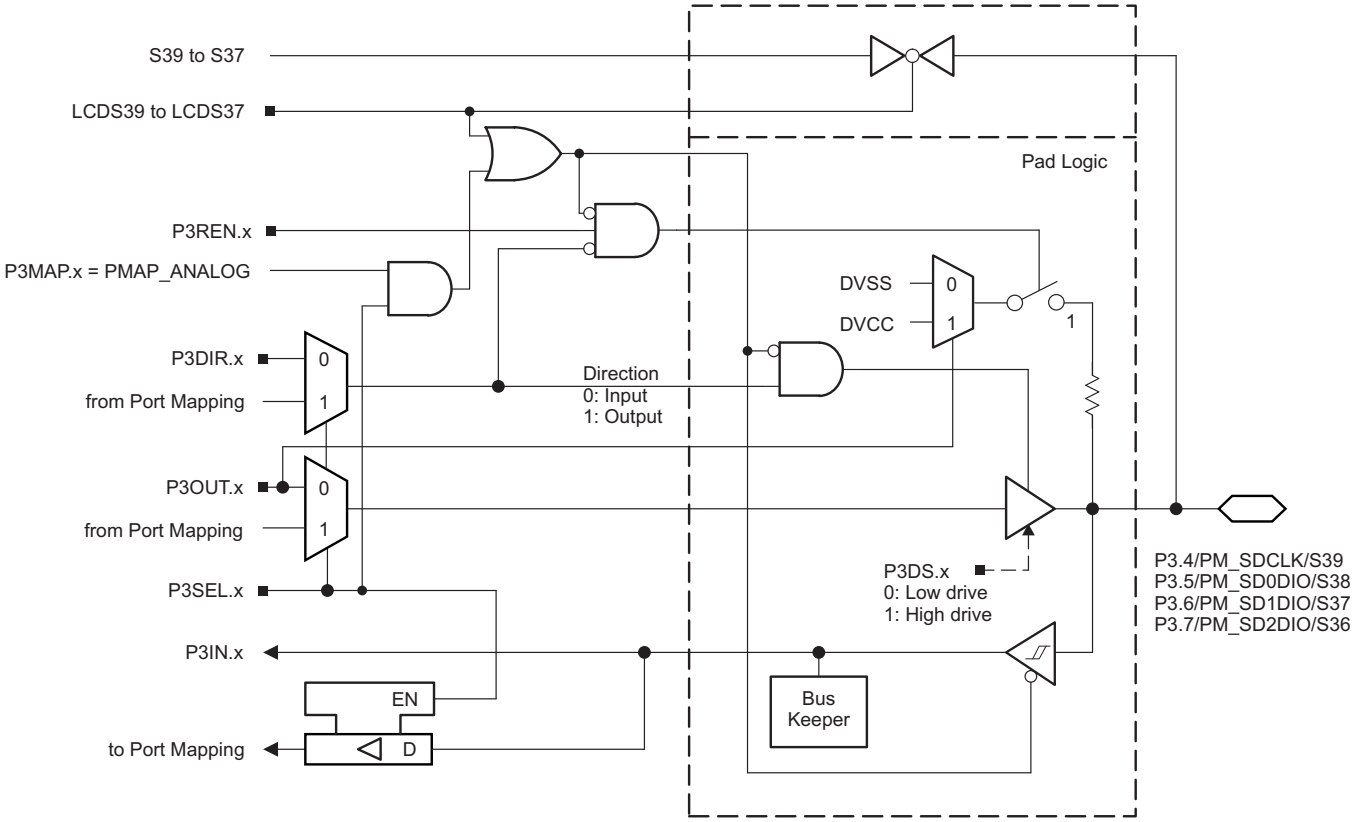

图 6-8. Port P3 (P3.4 to P3.7) Diagram (MSP430F67xxAIPZ Only)

版权 © 2015–2018, Texas Instruments Incorporated

表 6-24. Port P3 (P3.4 to P3.7) Pin Functions (MSP430F67xxAIPZ Only)

PIN NAME (P3.x)	x	FUNCTION	CONTROL BITS OR SIGNALS(1)			
			P3DIR.x	P3SEL.x	P3MAPx	LCDS39... LCDS36
P3.4/PM_SDCLK/S39	4	P3.4 (I/O)	I: 0; O: 1	0	X	0
		SDCLK	X	1	default	0
		Output driver and input Schmitt trigger disabled	X	1	= 31	0
		S39	X	X	X	1
P3.5/PM_SD0DIO/S38	5	P3.5 (I/O)	I: 0; O: 1	0	X	0
		SD0DIO	X	1	default	0
		Output driver and input Schmitt trigger disabled	X	1	= 31	0
		S38	X	X	X	1
P3.6/PM_SD1DIO/S37	6	P3.6 (I/O)	I: 0; O: 1	0	X	0
		SD1DIO	X	1	default	0
		Output driver and input Schmitt trigger disabled	X	1	= 31	0
		S37	X	X	X	1
P3.7/PM_SD2DIO/S36	7	P3.7 (I/O)	I: 0; O: 1	0	X	0
		SD2DIO	X	1	default	0
		Output driver and input Schmitt trigger disabled	X	1	= 31	0
		S36	X	X	X	1

(1) X = Don't care

6.12.8 Port P4 (P4.0 to P4.7), Port P5 (P5.0 to P5.7), Port P6 (P6.0 to P6.7), Port P7 (P7.0 to P7.7), Port P8 (P8.0 to P8.3) Input/Output With Schmitt Trigger (MSP430F67xxAIPZ Only)

图 6-9 shows the port diagram. 表 6-25 through 表 6-29 summarize the selection of the pin functions.

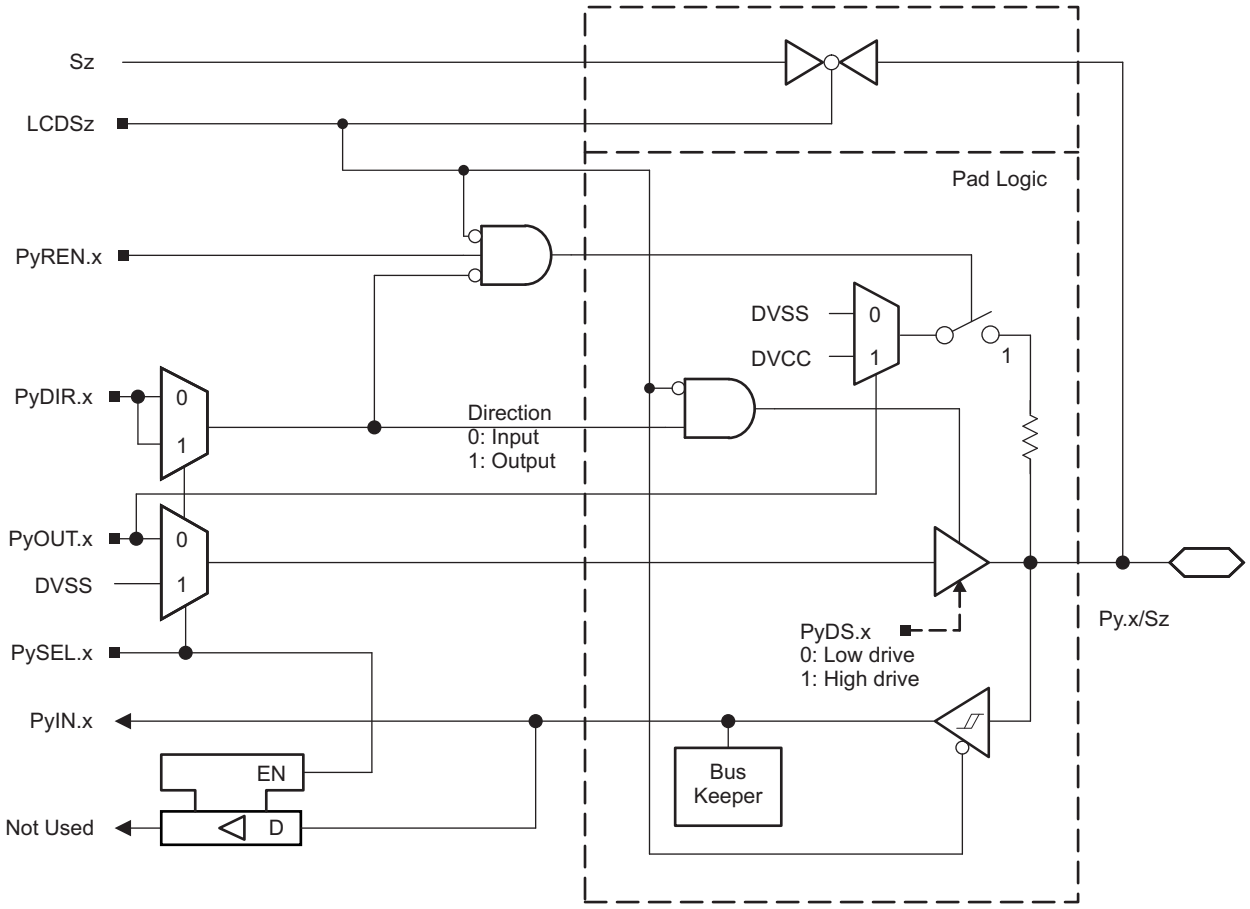

图 6-9. Port P4 (P4.0 to P4.7), Port P5 (P5.0 to P5.7), Port P6 (P6.0 to P6.7), Port P7 (P7.0 to P7.7), Port P8 (P8.0 to P8.3) Diagram (MSP430F67xxAIPZ Only)

版权 © 2015–2018, Texas Instruments Incorporated

表 6-25. Port P4 (P4.0 to P4.7) Pin Functions (MSP430F67xxAIPZ Only)

PIN NAME (P4.x)	x	FUNCTION	CONTROL BITS OR SIGNALS[1]		
			P4DIR.x	P4SEL.x	LCDS35... LCDS28
P4.0/S35	0	P4.0 (I/O)	I: 0; O: 1	0	0
		N/A	0	1	0
		DVSS	1	1	0
		S35	X	X	1
P4.1/S34	1	P4.1 (I/O)	I: 0; O: 1	0	0
		N/A	0	1	0
		DVSS	1	1	0
		S34	X	X	1
P4.2/S33	2	P4.2 (I/O)	I: 0; O: 1	0	0
		N/A	0	1	0
		DVSS	1	1	0
		S33	X	X	1
P4.3/S32	3	P4.3 (I/O)	I: 0; O: 1	0	0
		N/A	0	1	0
		DVSS	1	1	0
		S32	X	X	1
P4.4/S31	4	P4.4 (I/O)	I: 0; O: 1	0	0
		N/A	0	1	0
		DVSS	1	1	0
		S31	X	X	1
P4.5/S30	5	P4.5 (I/O)	I: 0; O: 1	0	0
		N/A	0	1	0
		DVSS	1	1	0
		S30	X	X	1
P4.6/S29	6	P4.6 (I/O)	I: 0; O: 1	0	0
		N/A	0	1	0
		DVSS	1	1	0
		S29	X	X	1
P4.7/S28	7	P4.7 (I/O)	I: 0; O: 1	0	0
		N/A	0	1	0
		DVSS	1	1	0
		S28	X	X	1

(1) X = Don't care

表 6-26. Port P5 (P5.0 to P5.7) Pin Functions (MSP430F67xxAIPZ Only)

PIN NAME (P5.x)	x	FUNCTION	CONTROL BITS OR SIGNALS[1]		
			P5DIR.x	P5SEL.x	LCDS27... LCDS20
P5.0/S27	0	P5.0 (I/O)	I: 0; O: 1	0	0
		N/A	0	1	0
		DVSS	1	1	0
		S27	X	X	1
P5.1/S26	1	P5.1 (I/O)	I: 0; O: 1	0	0
		N/A	0	1	0
		DVSS	1	1	0
		S26	X	X	1
P5.2/S25	2	P5.2 (I/O)	I: 0; O: 1	0	0
		N/A	0	1	0
		DVSS	1	1	0
		S25	X	X	1
P5.3/S24	3	P5.3 (I/O)	I: 0; O: 1	0	0
		N/A	0	1	0
		DVSS	1	1	0
		S24	X	X	1
P5.4/S23	4	P5.4 (I/O)	I: 0; O: 1	0	0
		N/A	0	1	0
		DVSS	1	1	0
		S23	X	X	1
P5.5/S22	5	P5.5 (I/O)	I: 0; O: 1	0	0
		N/A	0	1	0
		DVSS	1	1	0
		S22	X	X	1
P5.6/S21	6	P5.6 (I/O)	I: 0; O: 1	0	0
		N/A	0	1	0
		DVSS	1	1	0
		S21	X	X	1
P5.7/S20	7	P5.7 (I/O)	I: 0; O: 1	0	0
		N/A	0	1	0
		DVSS	1	1	0
		S20	X	X	1

(1) X = Don't care

版权 © 2015–2018, Texas Instruments Incorporated

表 6-27. Port P6 (P6.0 to P6.7) Pin Functions (MSP430F67xxAIPZ Only)

PIN NAME (P6.x)	x	FUNCTION	CONTROL BITS OR SIGNALS(1)		
			P6DIR.x	P6SEL.x	LCDS19... LCDS12
P6.0/S19	0	P6.0 (I/O)	I: 0; O: 1	0	0
		N/A	0	1	0
		DVSS	1	1	0
		S19	X	X	1
P6.1/S18	1	P6.1 (I/O)	I: 0; O: 1	0	0
		N/A	0	1	0
		DVSS	1	1	0
		S18	X	X	1
P6.2/S17	2	P6.2 (I/O)	I: 0; O: 1	0	0
		N/A	0	1	0
		DVSS	1	1	0
		S17	X	X	1
P6.3/S16	3	P6.3 (I/O)	I: 0; O: 1	0	0
		N/A	0	1	0
		DVSS	1	1	0
		S16	X	X	1
P6.4/S15	4	P6.4 (I/O)	I: 0; O: 1	0	0
		N/A	0	1	0
		DVSS	1	1	0
		S15	X	X	1
P6.5/S14	5	P6.5 (I/O)	I: 0; O: 1	0	0
		N/A	0	1	0
		DVSS	1	1	0
		S14	X	X	1
P6.6/S13	6	P6.6 (I/O)	I: 0; O: 1	0	0
		N/A	0	1	0
		DVSS	1	1	0
		S13	X	X	1
P6.7/S12	7	P6.7 (I/O)	I: 0; O: 1	0	0
		N/A	0	1	0
		DVSS	1	1	0
		S12	X	X	1

(1) X = Don't care

表 6-28. Port P7 (P7.0 to P7.7) Pin Functions (MSP430F67xxAIPZ Only)

PIN NAME (P7.x)	x	FUNCTION	CONTROL BITS OR SIGNALS[1]		
			P7DIR.x	P7SEL.x	LCDS11... LCDS4
P7.0/S11	0	P7.0 (I/O)	I: 0; O: 1	0	0
		N/A	0	1	0
		DVSS	1	1	0
		S11	X	X	1
P7.1/S10	1	P7.1 (I/O)	I: 0; O: 1	0	0
		N/A	0	1	0
		DVSS	1	1	0
		S10	X	X	1
P7.2/S9	2	P7.2 (I/O)	I: 0; O: 1	0	0
		N/A	0	1	0
		DVSS	1	1	0
		S9	X	X	1
P7.3/S8	3	P7.3 (I/O)	I: 0; O: 1	0	0
		N/A	0	1	0
		DVSS	1	1	0
		S8	X	X	1
P7.4/S7	4	P7.4 (I/O)	I: 0; O: 1	0	0
		N/A	0	1	0
		DVSS	1	1	0
		S7	X	X	1
P7.5/S6	5	P7.5 (I/O)	I: 0; O: 1	0	0
		N/A	0	1	0
		DVSS	1	1	0
		S6	X	X	1
P7.6/S5	6	P7.6 (I/O)	I: 0; O: 1	0	0
		N/A	0	1	0
		DVSS	1	1	0
		S5	X	X	1
P7.7/S4	7	P7.7 (I/O)	I: 0; O: 1	0	0
		N/A	0	1	0
		DVSS	1	1	0
		S4	X	X	1

(1) X = Don't care

版权 © 2015–2018, Texas Instruments Incorporated

表 6-29. Port P8 (P8.0 to P8.3) Pin Functions (MSP430F67xxAIPZ Only)

PIN NAME (P8.x)	x	FUNCTION	CONTROL BITS OR SIGNALS(1)		
			P8DIR.x	P8SEL.x	LCDS3... LCDS0
P8.0/S3	0	P8.0 (I/O)	I: 0; O: 1	0	0
		N/A	0	1	0
		DVSS	1	1	0
		S3	X	X	1
P8.1/S2	1	P8.1 (I/O)	I: 0; O: 1	0	0
		N/A	0	1	0
		DVSS	1	1	0
		S2	X	X	1
P8.2/S1	2	P8.2 (I/O)	I: 0; O: 1	0	0
		N/A	0	1	0
		DVSS	1	1	0
		S1	X	X	1
P8.3/S0	3	P8.3 (I/O)	I: 0; O: 1	0	0
		N/A	0	1	0
		DVSS	1	1	0
		S0	X	X	1

(1) X = Don't care

6.12.9 Port P8 (P8.4 to P8.7) Input/Output With Schmitt Trigger (MSP430F67xxAIPZ Only)

图 6-10 shows the port diagram. 表 6-30 summarizes the selection of the pin functions.

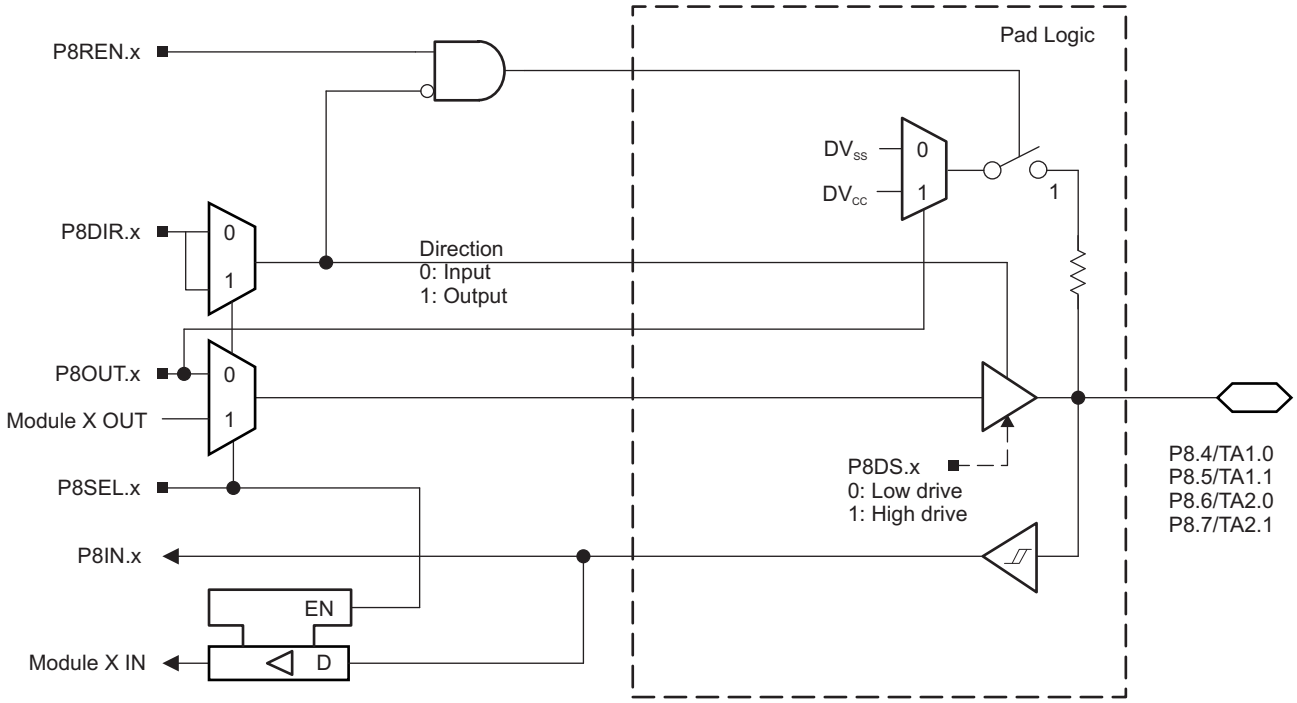

图 6-10. Port P8 (P8.4 to P8.7) Diagram (MSP430F67xxAIPZ Only)

表 6-30. Port P8 (P8.4 to P8.7) Pin Functions (MSP430F67xxAIPZ Only)

PIN NAME (P8.x)	x	FUNCTION	CONTROL BITS OR SIGNALS	
			P8DIR.x	P8SEL.x
P8.4/TA1.0	4	P8.4 (I/O)	I: 0; O: 1	0
		TA1.CCI0A	0	1
		TA1.TA0	1	1
P8.5/TA1.1	5	P8.5 (I/O)	I: 0; O: 1	0
		TA1.CCI1A	0	1
		TA1.TA1	1	1
P8.6/TA2.0	6	P8.6 (I/O)	I: 0; O: 1	0
		TA2.CCI0A	0	1
		TA2.TA0	1	1
P8.7/TA2.1	7	P8.7 (I/O)	I: 0; O: 1	0
		TA2.CCI1A	0	1
		TA2.TA1	1	1

版权 © 2015–2018, Texas Instruments Incorporated

6.12.10 Port P9 (P9.0) Input/Output With Schmitt Trigger (MSP430F67xxAIPZ Only)

图 6-11 shows the port diagram. 表 6-31 summarizes the selection of the pin functions.

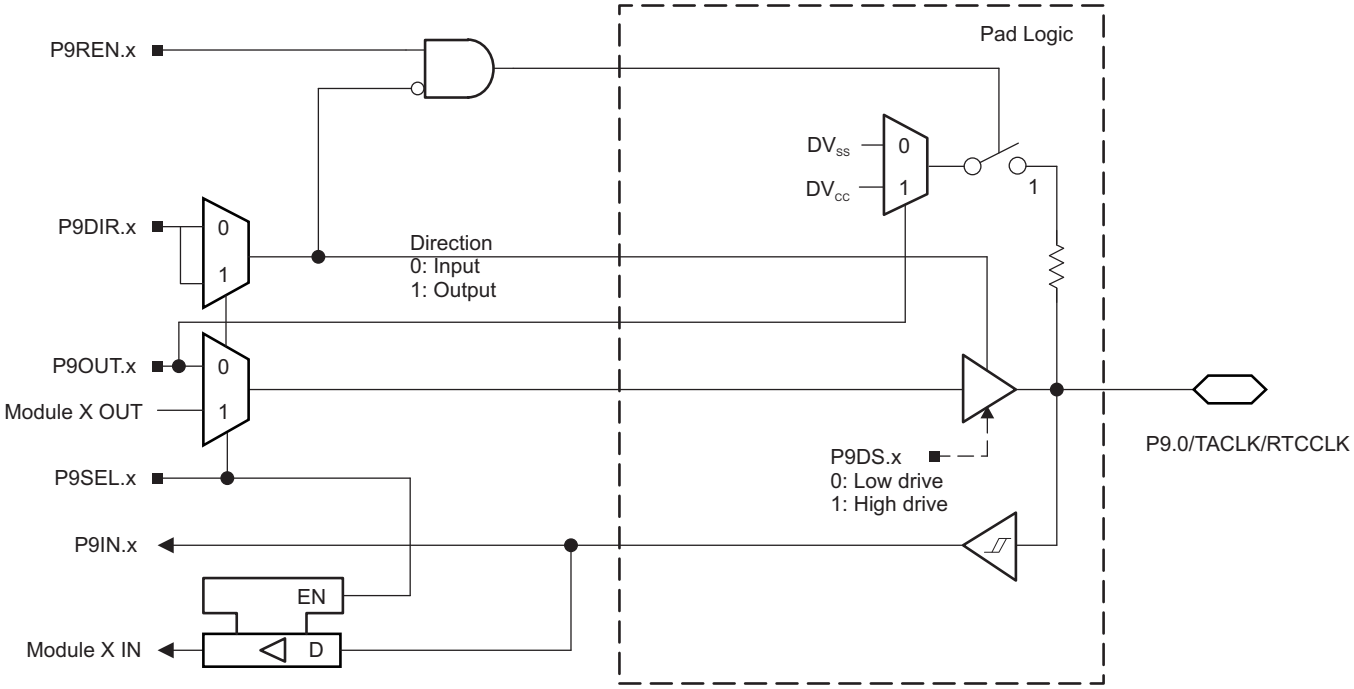

图 6-11. Port P9 (P9.0) Diagram (MSP430F67xxAIPZ Only)

表 6-31. Port P9 (P9.0) Pin Functions (MSP430F67xxAIPZ Only)

PIN NAME (P9.x)	x	FUNCTION	CONTROL BITS OR SIGNALS	
			P9DIR.x	P9SEL.x
P9.0/TACLK/RTCCLK	0	P9.0 (I/O)	I: 0; O: 1	0
		TACLK	0	1
		RTCCLK	1	1

6.12.11 Port P9 (P9.1 to P9.3) Input/Output With Schmitt Trigger (MSP430F67xxAIPZ Only)

图 6-12 shows the port diagram. 表 6-32 summarizes the selection of the pin functions.

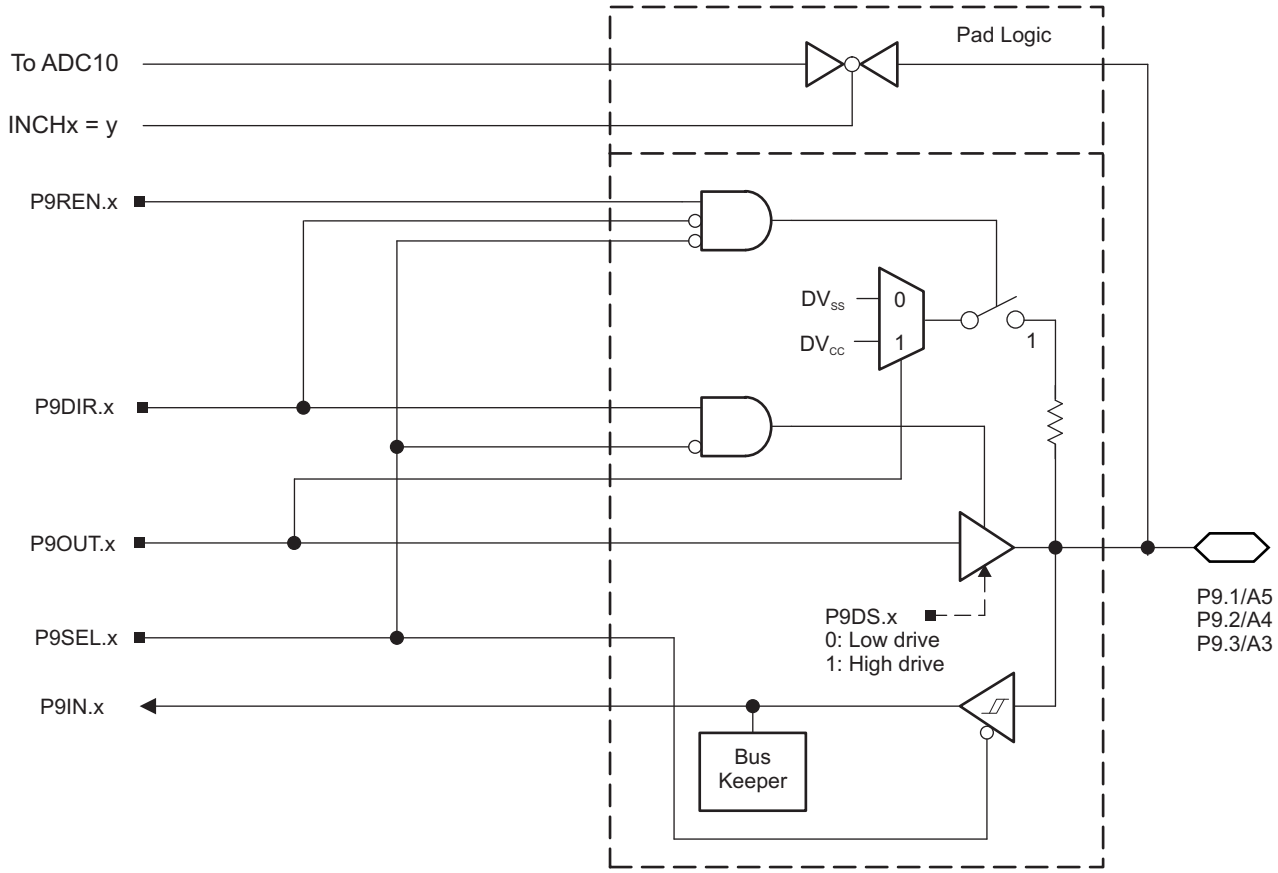

图 6-12. Port P9 (P9.1 to P9.3) Diagram (MSP430F67xxAIPZ Only)

表 6-32. Port P9 (P9.1 to P9.3) Pin Functions (MSP430F67xxAIPZ Only)

PIN NAME (P9.x)	x	FUNCTION	CONTROL BITS OR SIGNALS(1)	
			P9DIR.x	P9SEL.x
P9.1/A5	1	P9.1 (I/O)	I: 0; O: 1	0
		A5(2)	X	1
P9.2/A4	2	P9.2 (I/O)	I: 0; O: 1	0
		A4(2)	X	1
P9.3/A3	3	P9.3 (I/O)	I: 0; O: 1	0
		A3(2)	X	1

(1) X = Don't care
(2) Setting P9SEL.x bit disables the output driver and the input Schmitt trigger.

版权 © 2015–2018, Texas Instruments Incorporated

6.12.12 Port P2 (P2.0 and P2.1) Input/Output With Schmitt Trigger (MSP430F67xxAIPN Only)

图 6-13 shows the port diagram. 表 6-33 summarizes the selection of the pin functions.

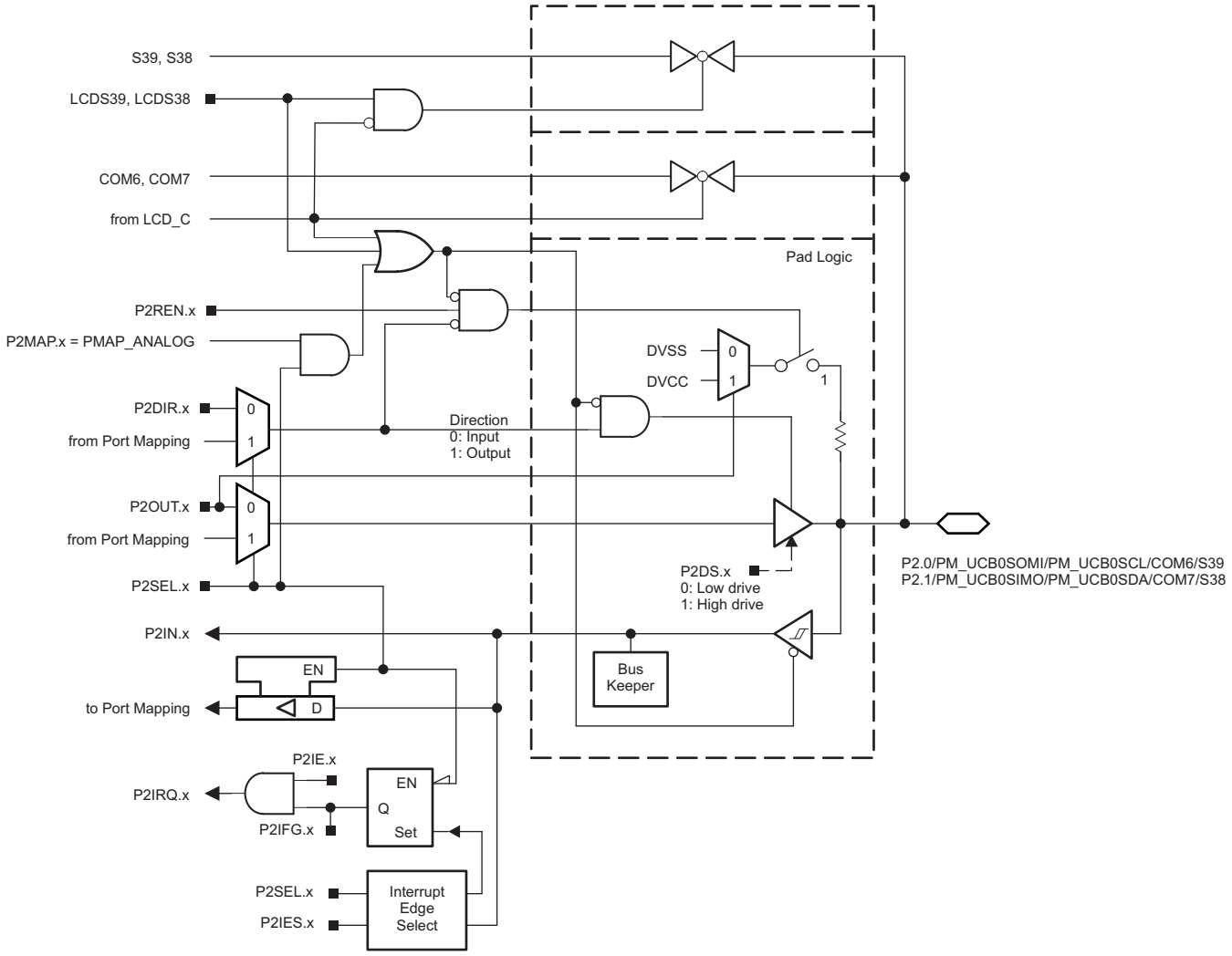

图 6-13. Port P2 (P2.0 and P2.1) Diagram (MSP430F67xxAIPN Only)

表 6-33. Port P2 (P2.0 and P2.1) Pin Functions (MSP430F67xxAIPN Only)

PIN NAME (P2.x)	x	FUNCTION	CONTROL BITS OR SIGNALS(1)				
			P2DIR.x	P2SEL.x	P2MAPx	LCDS39, LCDS38	COM6, COM7 Enable Signal
P2.0/PM_UCB0SOMI/ PM_UCB0SCL/COM6/ S39	0	P2.0 (I/O)	I: 0; O: 1	0	X	0	0
		UCB0SOMI/UCB0SCL	X	1	default	0	0
		Output driver and input Schmitt trigger disabled	X	1	= 31	0	0
		COM6	X	X	X	X	1
		S39	X	X	X	1	0
P2.1/PM_UCB0SIMO/ PM_UCB0SDA/COM7/ S38	1	P2.1 (I/O)	I: 0; O: 1	0	X	0	0
		UCB0SIMO/UCB0SDA	X	1	default	0	0
		Output driver and input Schmitt trigger disabled	X	1	= 31	0	0
		COM7	X	X	X	X	1
		S38	X	X	X	1	0

(1) X = Don't care

版权 © 2015–2018, Texas Instruments Incorporated

6.12.13 Port P2 (P2.2 to P2.7) Input/Output With Schmitt Trigger (MSP430F67xxAIPN Only)

图 6-14 shows the port diagram. 表 6-34 summarizes the selection of the pin functions.

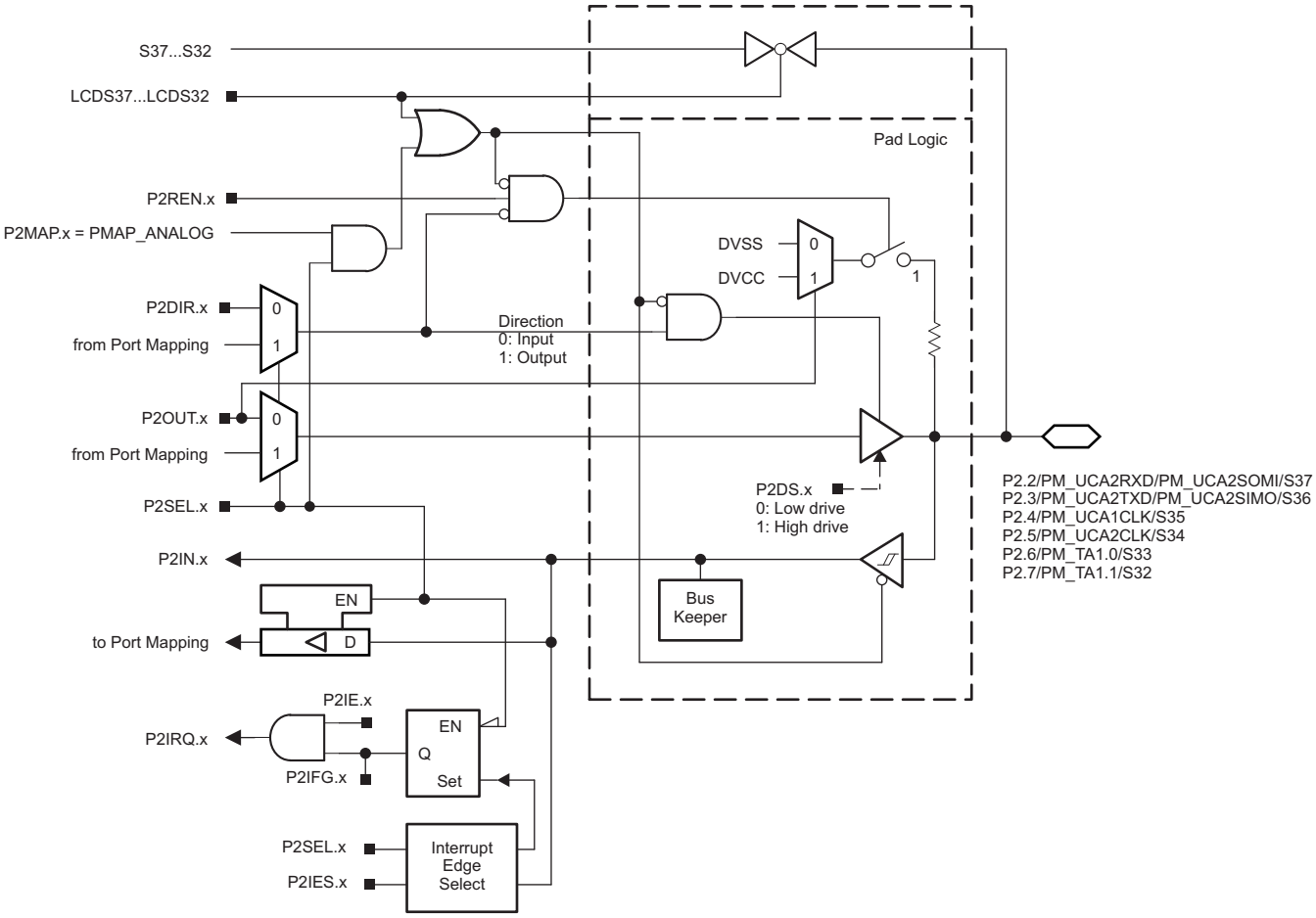

图 6-14. Port P2 (P2.2 to P2.7) Diagram (MSP430F67xxAIPN Only)

表 6-34. Port P2 (P2.2 to P2.7) Pin Functions (MSP430F67xxAIPN Only)

PIN NAME (P2.x)	x	FUNCTION	CONTROL BITS OR SIGNALS[1]			
			P2DIR.x	P2SEL.x	P2MAPx	LCDS37... LCDS32
P2.2/PM_UCA2RXD/ PM_UCA2SOMI/S37	2	P2.2 (I/O)	I: 0; O: 1	0	X	0
		UCA2RXD/UCA2SOMI	X	1	default	0
		Output driver and input Schmitt trigger disabled	X	1	= 31	0
		S37	X	X	X	1
P2.3/PM_UCA2TXD/ PM_UCA2SIMO/S36	3	P2.3 (I/O)	I: 0; O: 1	0	X	0
		UCA2TXD/UCA2SIMO	X	1	default	0
		Output driver and input Schmitt trigger disabled	X	1	= 31	0
		S36	X	X	X	1
P2.4/PM_UCA1CLK/S35	4	P2.4 (I/O)	I: 0; O: 1	0	X	0
		UCA1CLK	X	1	default	0
		Output driver and input Schmitt trigger disabled	X	1	= 31	0
		S35	X	X	X	1
P2.5/PM_UCA2CLK/S34	5	P2.5 (I/O)	I: 0; O: 1	0	X	0
		UCA2CLK	X	1	default	0
		Output driver and input Schmitt trigger disabled	X	1	= 31	0
		S34	X	X	X	1
P2.6/PM_TA1.0/S33	6	P2.6 (I/O)	I: 0; O: 1	0	X	0
		TA1.CCI0A	0	1	default	0
		TA1.TA0	1	1	default	0
		Output driver and input Schmitt trigger disabled	X	1	= 31	0
		S33	X	X	X	1
P2.7/PM_TA1.1/S32	7	P2.7 (I/O)	I: 0; O: 1	0	X	0
		TA1.CCI1A	0	1	default	0
		TA1.TA1	1	1	default	0
		Output driver and input Schmitt trigger disabled	X	1	= 31	0
		S32	X	X	X	1

(1) X = Don't care

版权 © 2015–2018, Texas Instruments Incorporated

6.12.14 Port P3 (P3.0 to P3.7) Input/Output With Schmitt Trigger (MSP430F67xxAIPN Only)

图 6-15 shows the port diagram. 表 6-35 summarizes the selection of the pin functions.

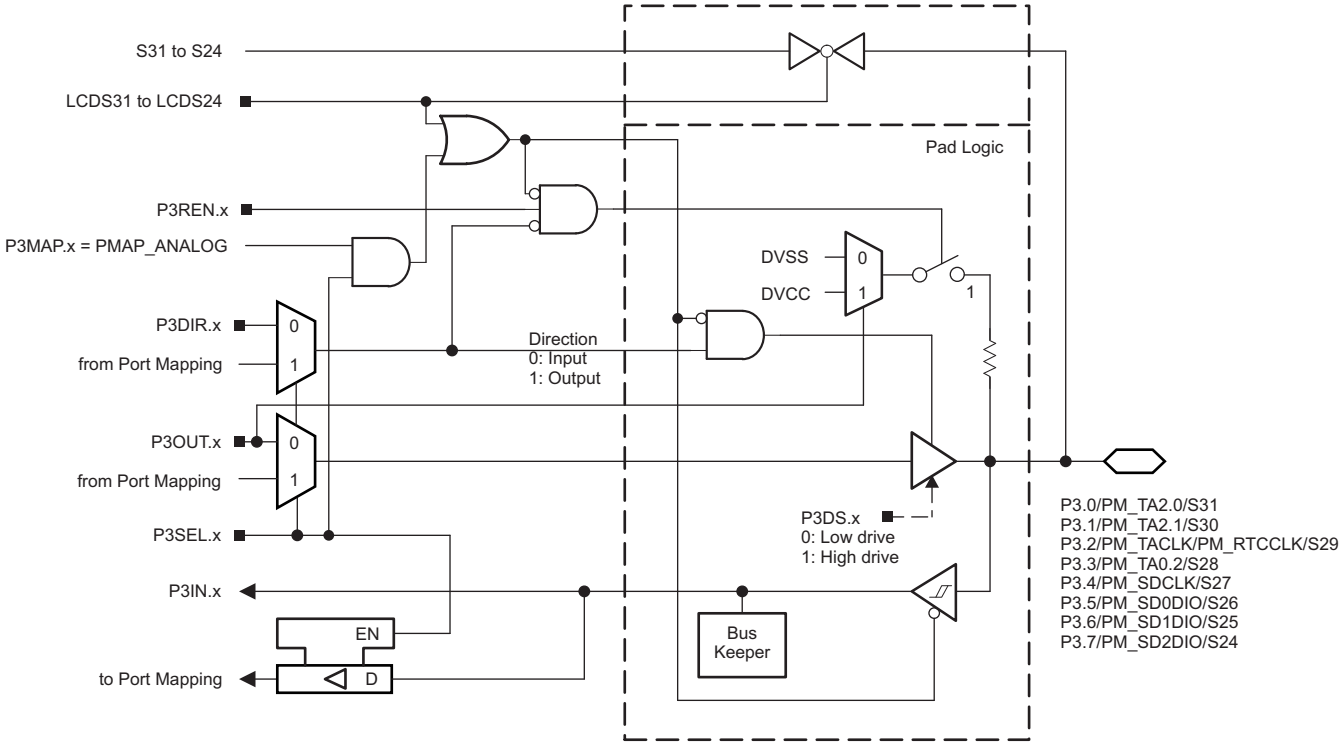

图 6-15. Port P3 (P3.0 to P3.7) Diagram (MSP430F67xxAIPN Only)

表 6-35. Port P3 (P3.0 to P3.7) Pin Functions (MSP430F67xxAIPN Only)

PIN NAME (P3.x)	x	FUNCTION	CONTROL BITS OR SIGNALS[1]			
			P3DIR.x	P3SEL.x	P3MAPx	LCDS31... LCDS24
P3.0/PM_TA2.0/S31	0	P3.0 (I/O)	I: 0; O: 1	0	X	0
		TA2.CCI0A	0	1	default	0
		TA2.TA0	1	1	default	0
		Output driver and input Schmitt trigger disabled	X	1	= 31	0
		S31	X	X	X	1
P3.1/PM_TA2.1/S30	1	P3.1 (I/O)	I: 0; O: 1	0	X	0
		TA2.CCI1A	0	1	default	0
		TA2.TA1	1	1	default	0
		Output driver and input Schmitt trigger disabled	X	1	= 31	0
		S30	X	X	X	1
P3.2/PM_TACLK/ PM_RTCCLK/S29	2	P3.2 (I/O)	I: 0; O: 1	0	X	0
		TACLK	0	1	default	0
		RTCCLK	1	1	default	0
		Output driver and input Schmitt trigger disabled	X	1	= 31	0
		S29	X	X	X	1
P3.3/PM_TA0.2/S28	3	P3.3 (I/O)	I: 0; O: 1	0	X	0
		TA0.CCI2A	0	1	default	0
		TA0.TA2	1	1	default	0
		Output driver and input Schmitt trigger disabled	X	1	= 31	0
		S28	X	X	X	1
P3.4/PM_SDCLK/S27	4	P3.4 (I/O)	I: 0; O: 1	0	X	0
		SDCLK	X	1	default	0
		Output driver and input Schmitt trigger disabled	X	1	= 31	0
		S27	X	X	X	1
P3.5/PM_SD0DIO/S26	5	P3.5 (I/O)	I: 0; O: 1	0	X	0
		SD0DIO	X	1	default	0
		Output driver and input Schmitt trigger disabled	X	1	= 31	0
		S26	X	X	X	1
P3.6/PM_SD1DIO/S25	6	P3.6 (I/O)	I: 0; O: 1	0	X	0
		SD1DIO	X	1	default	0
		Output driver and input Schmitt trigger disabled	X	1	= 31	0
		S25	X	X	X	1
P3.7/PM_SD2DIO/S24	7	P3.7 (I/O)	I: 0; O: 1	0	X	0
		SD2DIO	X	1	default	0
		Output driver and input Schmitt trigger disabled	X	1	= 31	0
		S24	X	X	X	1

(1) X = Don't care

版权 © 2015–2018, Texas Instruments Incorporated

6.12.15 Port P4 (P4.0 to P4.7), Port P5 (P5.0 to P5.7), Port P6 (P6.0 to P6.7) Input/Output With Schmitt Trigger (MSP430F67xxAIPN Only)

图 6-16 shows the port diagram. 表 6-36 through 表 6-38 summarize the selection of the pin functions.

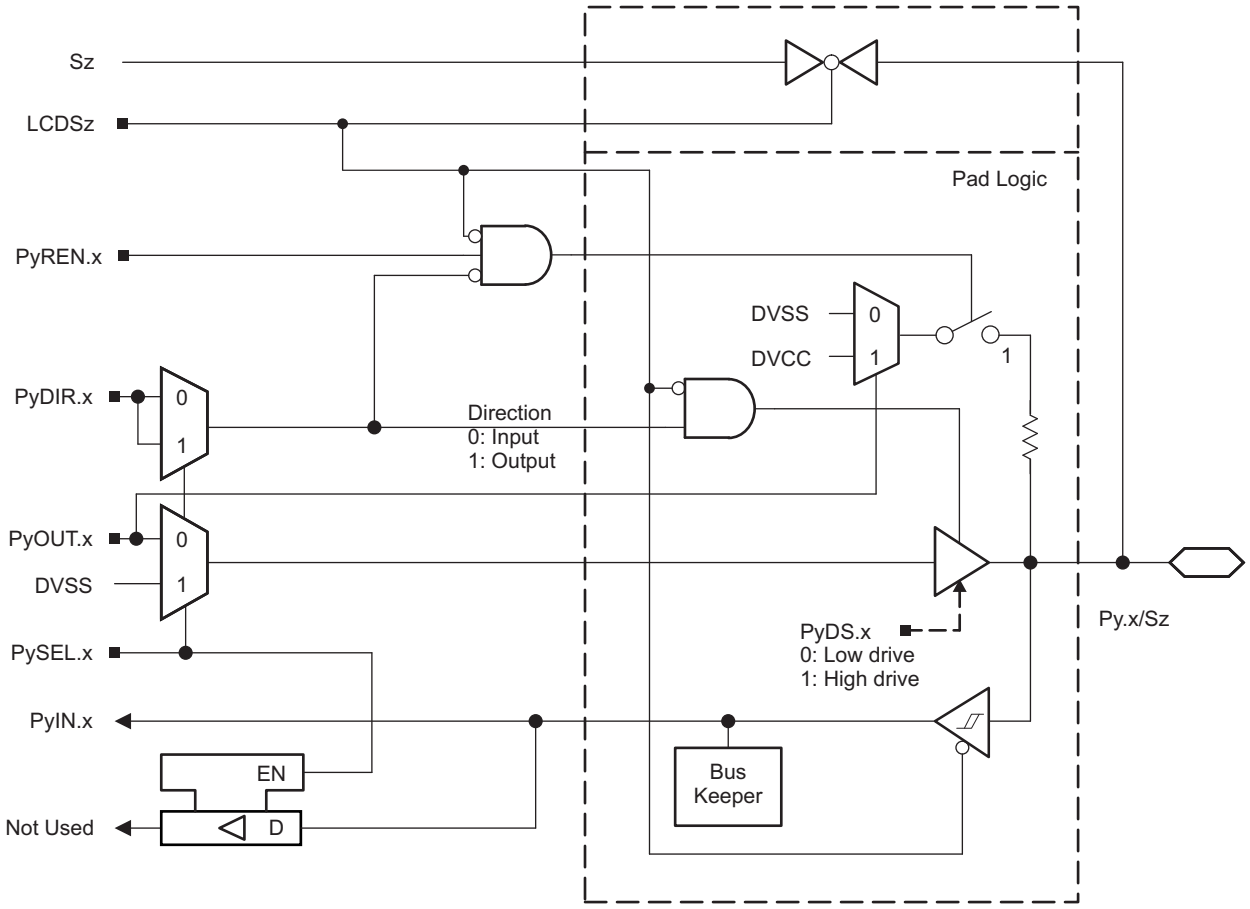

图 6-16. Port P4 (P4.0 to P4.7), Port P5 (P5.0 to P5.7), Port P6 (P6.0 to P6.7) Diagram (MSP430F67xxAIPN Only)

表 6-36. Port P4 (P4.0 to P4.7) Pin Functions (MSP430F67xxAIPN Only)

PIN NAME (P4.x)	x	FUNCTION	CONTROL BITS OR SIGNALS(1)		
			P4DIR.x	P4SEL.x	LCDS23... LCDS16
P4.0/S23	0	P4.0 (I/O)	I: 0; O: 1	0	0
		N/A	0	1	0
		DVSS	1	1	0
		S23	X	X	1
P4.1/S22	1	P4.1 (I/O)	I: 0; O: 1	0	0
		N/A	0	1	0
		DVSS	1	1	0
		S22	X	X	1
P4.2/S21	2	P4.2 (I/O)	I: 0; O: 1	0	0
		N/A	0	1	0
		DVSS	1	1	0
		S21	X	X	1
P4.3/S20	3	P4.3 (I/O)	I: 0; O: 1	0	0
		N/A	0	1	0
		DVSS	1	1	0
		S20	X	X	1
P4.4/S19	4	P4.4 (I/O)	I: 0; O: 1	0	0
		N/A	0	1	0
		DVSS	1	1	0
		S19	X	X	1
P4.5/S18	5	P4.5 (I/O)	I: 0; O: 1	0	0
		N/A	0	1	0
		DVSS	1	1	0
		S18	X	X	1
P4.6/S17	6	P4.6 (I/O)	I: 0; O: 1	0	0
		N/A	0	1	0
		DVSS	1	1	0
		S17	X	X	1
P4.7/S16	7	P4.7 (I/O)	I: 0; O: 1	0	0
		N/A	0	1	0
		DVSS	1	1	0
		S16	X	X	1

(1) X = Don't care

版权 © 2015–2018, Texas Instruments Incorporated

表 6-37. Port P5 (P5.0 to P5.7) Pin Functions (MSP430F67xxAIPN Only)

PIN NAME (P5.x)	x	FUNCTION	CONTROL BITS OR SIGNALS(1)		
			P5DIR.x	P5SEL.x	LCDS15... LCDS8
P5.0/S15	0	P5.0 (I/O)	I: 0; O: 1	0	0
		N/A	0	1	0
		DVSS	1	1	0
		S15	X	X	1
P5.1/S14	1	P5.1 (I/O)	I: 0; O: 1	0	0
		N/A	0	1	0
		DVSS	1	1	0
		S14	X	X	1
P5.2/S13	2	P5.2 (I/O)	I: 0; O: 1	0	0
		N/A	0	1	0
		DVSS	1	1	0
		S13	X	X	1
P5.3/S12	3	P5.3 (I/O)	I: 0; O: 1	0	0
		N/A	0	1	0
		DVSS	1	1	0
		S12	X	X	1
P5.4/S11	4	P5.4 (I/O)	I: 0; O: 1	0	0
		N/A	0	1	0
		DVSS	1	1	0
		S11	X	X	1
P5.5/S10	5	P5.5 (I/O)	I: 0; O: 1	0	0
		N/A	0	1	0
		DVSS	1	1	0
		S10	X	X	1
P5.6/S9	6	P5.6 (I/O)	I: 0; O: 1	0	0
		N/A	0	1	0
		DVSS	1	1	0
		S9	X	X	1
P5.7/S8	7	P5.7 (I/O)	I: 0; O: 1	0	0
		N/A	0	1	0
		DVSS	1	1	0
		S8	X	X	1

(1) X = Don't care

表 6-38. Port P6 (P6.0 to P6.7) Pin Functions (MSP430F67xxAIPN Only)

PIN NAME (P6.x)	x	FUNCTION	CONTROL BITS OR SIGNALS (1)		
			P6DIR.x	P6SEL.x	LCDS7... LCDS0
P6.0/S7	0	P6.0 (I/O)	I: 0; O: 1	0	0
		N/A	0	1	0
		DVSS	1	1	0
		S7	X	X	1
P6.1/S6	1	P6.1 (I/O)	I: 0; O: 1	0	0
		N/A	0	1	0
		DVSS	1	1	0
		S6	X	X	1
P6.2/S5	2	P6.2 (I/O)	I: 0; O: 1	0	0
		N/A	0	1	0
		DVSS	1	1	0
		S5	X	X	1
P6.3/S4	3	P6.3 (I/O)	I: 0; O: 1	0	0
		N/A	0	1	0
		DVSS	1	1	0
		S4	X	X	1
P6.4/S3	4	P6.4 (I/O)	I: 0; O: 1	0	0
		N/A	0	1	0
		DVSS	1	1	0
		S3	X	X	1
P6.5/S2	5	P6.5 (I/O)	I: 0; O: 1	0	0
		N/A	0	1	0
		DVSS	1	1	0
		S2	X	X	1
P6.6/S1	6	P6.6 (I/O)	I: 0; O: 1	0	0
		N/A	0	1	0
		DVSS	1	1	0
		S1	X	X	1
P6.7/S0	7	P6.7 (I/O)	I: 0; O: 1	0	0
		N/A	0	1	0
		DVSS	1	1	0
		S0	X	X	1

(1) X = Don't care

版权 © 2015–2018, Texas Instruments Incorporated

6.12.16 Port PJ (PJ.0) JTAG Pin TDO, Input/Output With Schmitt Trigger or Output

图 6-17 shows the port diagram. 表 6-39 summarizes the selection of the pin functions.

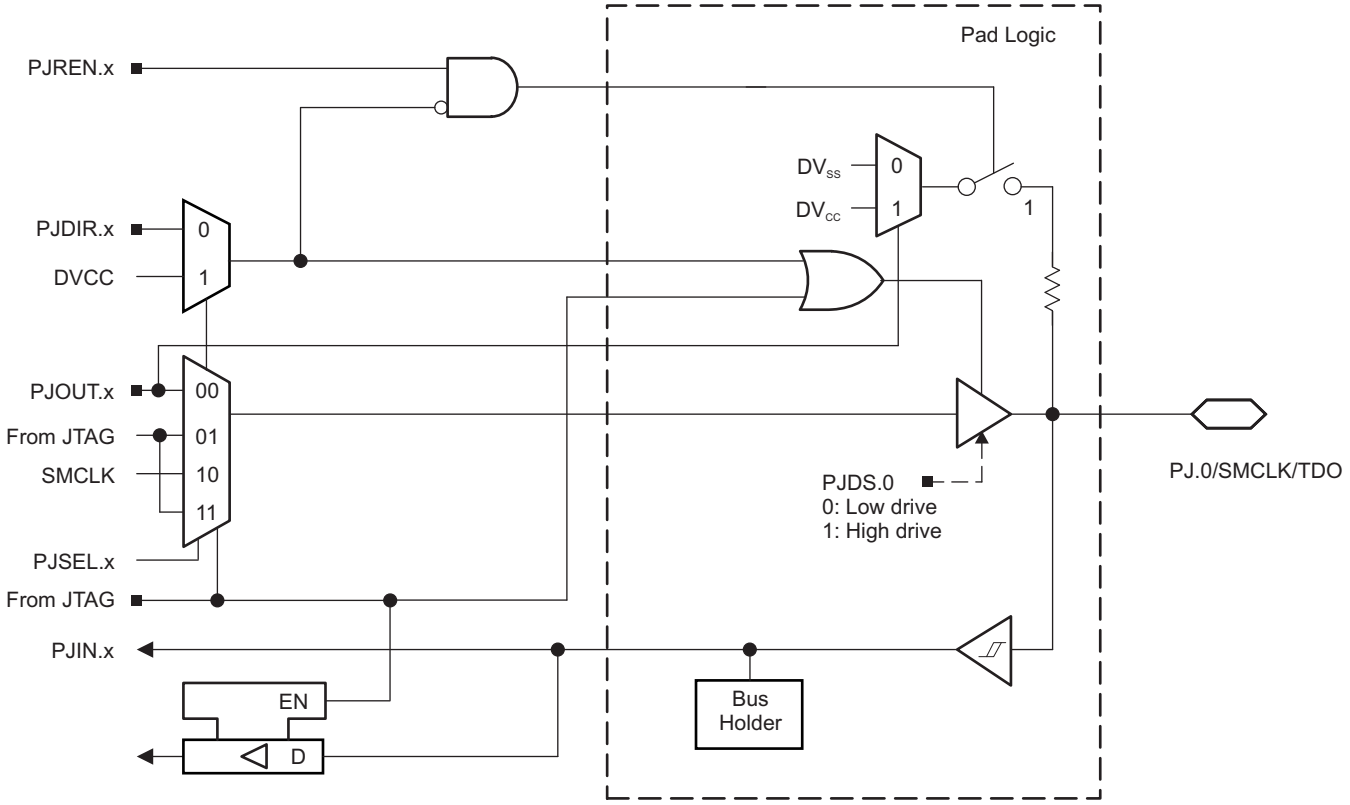

图 6-17. Port PJ (PJ.0) Diagram

6.12.17 Port PJ (PJ.1 to PJ.3) JTAG Pins TMS, TCK, TDI/TCLK, Input/Output With Schmitt Trigger or Output

图 6-18 shows the port diagram. 表 6-39 summarizes the selection of the pin functions.

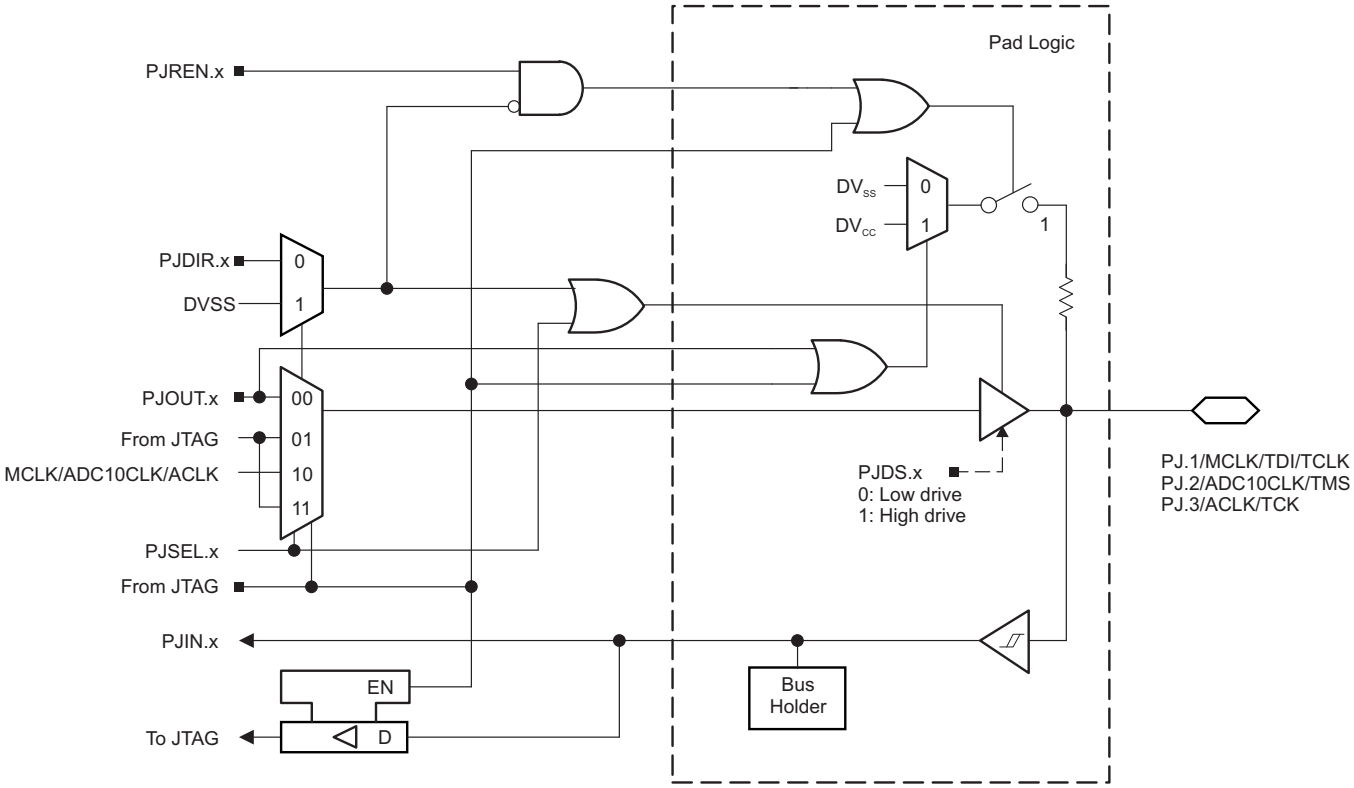

图 6-18. Port PJ (PJ.1 to PJ.3) Diagram

表 6-39. Port PJ (PJ.0 to PJ.3) Pin Functions

PIN NAME (PJ.x)	x	FUNCTION	CONTROL BITS OR SIGNALS(1)		
			PJDIR.x	PJSEL.x	JTAG Mode Signal
PJ.0/SMCLK/TDO	0	PJ.0 (I/O)(2)	I: 0; O: 1	0	0
		SMCLK	1	1	0
		TDO(3)	X	X	1
PJ.1/MCLK/TDI/TCLK	1	PJ.1 (I/O)(2)	I: 0; O: 1	0	0
		MCLK	1	1	0
		TDI/TCLK (3) (4)	X	X	1
PJ.2/ADC10CLK/TMS	2	PJ.2 (I/O)(2)	I: 0; O: 1	0	0
		ADC10CLK	1	1	0
		TMS (3) (4)	X	X	1
PJ.3/ACLK/TCK	3	PJ.3 (I/O)(2)	I: 0; O: 1	0	0
		ACLK	1	1	0
		TCK (3) (4)	X	X	1

(1) X = Don't care
(2) Default condition
(3) The pin direction is controlled by the JTAG module.
(4) In JTAG mode, pullups are activated automatically on TMS, TCK, and TDI/TCLK. PJREN.x are don't care.

版权 © 2015–2018, Texas Instruments Incorporated

6.13 Device Descriptors (TLV)

表 6-40 and 表 6-41 list the complete contents of the device descriptor tag-length-value (TLV) structure for each device type.

表 6-40. MSP430F673xA Device Descriptors

DESCRIPTION		ADDRESS	SIZE (bytes)	VALUE					
				F6736A	F6735A	F6734A	F6733A	F6731A	F6730A
Info Block	Info length	01A00h	1	06h	06h	06h	06h	06h	06h
	CRC length	01A01h	1	06h	06h	06h	06h	06h	06h
	CRC value	01A02h	2	Per unit	Per unit	Per unit	Per unit	Per unit	Per unit
	Device ID	01A04h	1	86h	85h	84h	83h	81h	80h
	Device ID	01A05h	1	82h	82h	82h	82h	82h	82h
	Hardware revision	01A06h	1	Per unit	Per unit	Per unit	Per unit	Per unit	Per unit
	Firmware revision	01A07h	1	Per unit	Per unit	Per unit	Per unit	Per unit	Per unit
Die Record	Die record tag	01A08h	1	08h	08h	08h	08h	08h	08h
	Die record length	01A09h	1	0Ah	0Ah	0Ah	0Ah	0Ah	0Ah
	Lot/wafer ID	01A0Ah	4	Per unit	Per unit	Per unit	Per unit	Per unit	Per unit
	Die X position	01A0Eh	2	Per unit	Per unit	Per unit	Per unit	Per unit	Per unit
	Die Y position	01A10h	2	Per unit	Per unit	Per unit	Per unit	Per unit	Per unit
	Test results	01A12h	2	Per unit	Per unit	Per unit	Per unit	Per unit	Per unit
ADC10 Calibration	ADC10 calibration tag	01A14h	1	13h	13h	13h	13h	13h	13h
	ADC10 calibration length	01A15h	1	10h	10h	10h	10h	10h	10h
	ADC gain factor	01A16h	2	Per unit	Per unit	Per unit	Per unit	Per unit	Per unit
	ADC offset	01A18h	2	Per unit	Per unit	Per unit	Per unit	Per unit	Per unit
	ADC 1.5-V reference Temperature sensor 30°C	01A1Ah	2	Per unit	Per unit	Per unit	Per unit	Per unit	Per unit
	ADC 1.5-V reference Temperature sensor 85°C	01A1Ch	2	Per unit	Per unit	Per unit	Per unit	Per unit	Per unit
	ADC 2.0-V reference Temperature sensor 30°C	01A1Eh	2	Per unit	Per unit	Per unit	Per unit	Per unit	Per unit
	ADC 2.0-V reference Temperature sensor 85°C	01A20h	2	Per unit	Per unit	Per unit	Per unit	Per unit	Per unit
	ADC 2.5-V reference Temperature sensor 30°C	01A22h	2	Per unit	Per unit	Per unit	Per unit	Per unit	Per unit
	ADC 2.5-V reference Temperature sensor 85°C	01A24h	2	Per unit	Per unit	Per unit	Per unit	Per unit	Per unit

表 6-41. MSP430F672xA Device Descriptors

DESCRIPTION		ADDRESS	SIZE (bytes)	VALUE					
				F6726A	F6725A	F6724A	F6723A	F6721A	F6720A
Info Block	Info length	01A00h	1	06h	06h	06h	06h	06h	06h
	CRC length	01A01h	1	06h	06h	06h	06h	06h	06h
	CRC value	01A02h	2	Per unit	Per unit	Per unit	Per unit	Per unit	Per unit
	Device ID	01A04h	1	7Ch	7Bh	7Ah	79h	77h	76h
	Device ID	01A05h	1	82h	82h	82h	82h	82h	82h
	Hardware revision	01A06h	1	Per unit	Per unit	Per unit	Per unit	Per unit	Per unit
	Firmware revision	01A07h	1	Per unit	Per unit	Per unit	Per unit	Per unit	Per unit
Die Record	Die record tag	01A08h	1	08h	08h	08h	08h	08h	08h
	Die record length	01A09h	1	0Ah	0Ah	0Ah	0Ah	0Ah	0Ah
	Lot/wafer ID	01A0Ah	4	Per unit	Per unit	Per unit	Per unit	Per unit	Per unit
	Die X position	01A0Eh	2	Per unit	Per unit	Per unit	Per unit	Per unit	Per unit
	Die Y position	01A10h	2	Per unit	Per unit	Per unit	Per unit	Per unit	Per unit
	Test results	01A12h	2	Per unit	Per unit	Per unit	Per unit	Per unit	Per unit
ADC10 Calibration	ADC10 calibration tag	01A14h	1	13h	13h	13h	13h	13h	13h
	ADC10 calibration length	01A15h	1	10h	10h	10h	10h	10h	10h
	ADC gain factor	01A16h	2	Per unit	Per unit	Per unit	Per unit	Per unit	Per unit
	ADC offset	01A18h	2	Per unit	Per unit	Per unit	Per unit	Per unit	Per unit
	ADC 1.5-V reference Temperature sensor 30°C	01A1Ah	2	Per unit	Per unit	Per unit	Per unit	Per unit	Per unit
	ADC 1.5-V reference Temperature sensor 85°C	01A1Ch	2	Per unit	Per unit	Per unit	Per unit	Per unit	Per unit
	ADC 2.0-V reference Temperature sensor 30°C	01A1Eh	2	Per unit	Per unit	Per unit	Per unit	Per unit	Per unit
	ADC 2.0-V reference Temperature sensor 85°C	01A20h	2	Per unit	Per unit	Per unit	Per unit	Per unit	Per unit
	ADC 2.5-V reference Temperature sensor 30°C	01A22h	2	Per unit	Per unit	Per unit	Per unit	Per unit	Per unit
	ADC 2.5-V reference Temperature sensor 85°C	01A24h	2	Per unit	Per unit	Per unit	Per unit	Per unit	Per unit

版权 © 2015–2018, Texas Instruments Incorporated

6.14 Memory

6.14.1 Memory Organization

表 6-42 and 表 6-43 summarize the memory map for all device variants.

表 6-42. Memory Organization

		MSP430F6730A MSP430F6720A	MSP430F6731A MSP430F6721A	MSP430F6733A MSP430F6723A
Main Memory (flash)	Total Size	16KB	32KB	64KB
Main: Interrupt vector		00FFFFh–00FF80h	00FFFFh–00FF80h	00FFFFh–00FF80h
Main: code memory	Bank 3	Not available	Not available	Not available
	Bank 2	Not available	Not available	Not available
	Bank 1	Not available	16KB 00FFFFh–00C000h	32KB 013FFFh–00C000h
	Bank 0	16KB 00FFFFh–00C000h	16KB 00BFFFh–008000h	32KB 00BFFFh–004000h
RAM	Total Size	1KB	2KB	4KB
	Sector 3	Not available	Not available	Not available
	Sector 2	Not available	Not available	Not available
	Sector 1	Not available	Not available	2KB 002BFFh–002400h
	Sector 0	1KB 001FFFh–001C00h	2KB 0023FFh–001C00h	2KB 0023FFh–001C00h
Information memory (flash)	Info A	128 B 0019FFh–001980h	128 B 0019FFh–001980h	128 B 0019FFh–001980h
	Info B	128 B 00197Fh–001900h	128 B 00197Fh–001900h	128 B 00197Fh–001900h
	Info C	128 B 0018FFh–001880h	128 B 0018FFh–001880h	128 B 0018FFh–001880h
	Info D	128 B 00187Fh–001800h	128 B 00187Fh–001800h	128 B 00187Fh–001800h
Bootloader (BSL) memory (flash)	BSL 3	512 B 0017FFh–001600h	512 B 0017FFh–001600h	512 B 0017FFh–001600h
	BSL 2	512 B 0015FFh–001400h	512 B 0015FFh–001400h	512 B 0015FFh–001400h
	BSL 1	512 B 0013FFh–001200h	512 B 0013FFh–001200h	512 B 0013FFh–001200h
	BSL 0	512 B 0011FFh–001000h	512 B 0011FFh–001000h	512 B 0011FFh–001000h
Peripherals		4 KB 000FFFh–0h	4 KB 000FFFh–0h	4 KB 000FFFh–0h

表 6-43. Memory Organization

		MSP430F6734A MSP430F6724A	MSP430F6735A MSP430F6725A	MSP430F6736A MSP430F6726A
Main Memory (flash)	Total Size	96KB	128KB	128KB
Main: Interrupt vector		00FFFFh–00FF80h	00FFFFh–00FF80h	00FFFFh–00FF80h
Main: code memory	Bank 3	Not available	32KB 023FFFh–01C000h	32KB 023FFFh–01C000h
	Bank 2	32KB 01BFFFh–014000h	32KB 01BFFFh–014000h	32KB 01BFFFh–014000h
	Bank 1	32KB 013FFFh–00C000h	32KB 013FFFh–00C000h	32KB 013FFFh–00C000h
	Bank 0	32KB 00BFFFh–004000h	32KB 00BFFFh–004000h	32KB 00BFFFh–004000h
RAM	Total Size	4KB	4KB	8KB
	Sector 3	Not available	Not available	2KB 003BFFh–003400h
	Sector 2	Not available	Not available	2KB 0033FFh–002C00h
	Sector 1	2KB 002BFFh–002400h	2KB 002BFFh–002400h	2KB 002BFFh–002400h
	Sector 0	2KB 0023FFh–001C00h	2KB 0023FFh–001C00h	2KB 0023FFh–001C00h
Information memory (flash)	Info A	128 B 0019FFh–001980h	128 B 0019FFh–001980h	128 B 0019FFh–001980h
	Info B	128 B 00197Fh–001900h	128 B 00197Fh–001900h	128 B 00197Fh–001900h
	Info C	128 B 0018FFh–001880h	128 B 0018FFh–001880h	128 B 0018FFh–001880h
	Info D	128 B 00187Fh–001800h	128 B 00187Fh–001800h	128 B 00187Fh–001800h
Bootloader (BSL) memory (flash)	BSL 3	512 B 0017FFh–001600h	512 B 0017FFh–001600h	512 B 0017FFh–001600h
	BSL 2	512 B 0015FFh–001400h	512 B 0015FFh–001400h	512 B 0015FFh–001400h
	BSL 1	512 B 0013FFh–001200h	512 B 0013FFh–001200h	512 B 0013FFh–001200h
	BSL 0	512 B 0011FFh–001000h	512 B 0011FFh–001000h	512 B 0011FFh–001000h
Peripherals		4 KB 000FFFh–0h	4 KB 000FFFh–0h	4 KB 000FFFh–0h

版权 © 2015–2018, Texas Instruments Incorporated

6.14.2 Peripheral File Map

表 6-44 lists the available modules with the base address and the offset range for each. 表 6-45 through 表 6-82 list all of the available registers for each module.

表 6-44. Peripheral File Map

MODULE NAME	BASE ADDRESS	OFFSET ADDRESS RANGE
Special Functions (see 表 6-45)	0100h	000h–01Fh
PMM (see 表 6-46)	0120h	000h–01Fh
Flash Control (see 表 6-47)	0140h	000h–00Fh
CRC16 (see 表 6-48)	0150h	000h–007h
RAM Control (see 表 6-49)	0158h	000h–001h
Watchdog (see 表 6-50)	015Ch	000h–001h
UCS (see 表 6-51)	0160h	000h–01Fh
SYS (see 表 6-52)	0180h	000h–01Fh
Shared Reference (see 表 6-53)	01B0h	000h–001h
Port Mapping Control (see 表 6-54)	01C0h	000h–007h
Port Mapping Port P1 (see 表 6-55)	01C8h	000h–007h
Port Mapping Port P2 (see 表 6-56)	01D0h	000h–007h
Port Mapping Port P3 (see 表 6-57)	01D8h	000h–007h
Port P1, P2 (see 表 6-58)	0200h	000h–01Fh
Port P3, P4 (see 表 6-59)	0220h	000h–00Bh
Port P5, P6 (see 表 6-60)	0240h	000h–00Bh
Port P7, P8 (see 表 6-61) (Port P7, P8 not available in MSP430F67xxAIPN)	0260h	000h–00Bh
Port P9 (Port P9 not available in MSP430F67xxAIPN) (see 表 6-62)	0280h	000h–00Bh
Port PJ (refer to表 6-63)	0320h	000h–01Fh
Timer TA0 (see 表 6-64)	0340h	000h–03Fh
Timer TA1 (see 表 6-65)	0380h	000h–03Fh
Timer TA2 (see 表 6-66)	0400h	000h–03Fh
Timer TA3 (see 表 6-67)	0440h	000h–03Fh
Backup Memory (see 表 6-68)	0480h	000h–00Fh
RTC_C (see 表 6-69)	04A0h	000h–01Fh
32-Bit Hardware Multiplier (see 表 6-70)	04C0h	000h–02Fh
DMA General Control (see 表 6-71)	0500h	000h–00Fh
DMA Channel 0 (see 表 6-72)	0500h	010h–01Fh
DMA Channel 1 (see 表 6-73)	0500h	020h–02Fh
DMA Channel 2 (see 表 6-74)	0500h	030h–03Fh
eUSCI_A0 (see 表 6-75)	05C0h	000h–01Fh
eUSCI_A1 (see 表 6-76)	05E0h	000h–01Fh
eUSCI_A2 (see 表 6-77)	0600h	000h–01Fh
eUSCI_B0 (see 表 6-78)	0640h	000h–02Fh
ADC10_A (see 表 6-79)	0740h	000h–01Fh
SD24_B (see 表 6-80)	0800h	000h–06Fh
Auxiliary Supply (see 表 6-74)	09E0h	000h–01Fh
LCD_C (see 表 6-82)	0A00h	000h–05Fh

表 6-45. Special Function Registers (Base Address: 0100h)

REGISTER DESCRIPTION	REGISTER	OFFSET
SFR interrupt enable	SFRIE1	00h
SFR interrupt flag	SFRIFG1	02h
SFR reset pin control	SFRRPCR	04h

表 6-46. PMM Registers (Base Address: 0120h)

REGISTER DESCRIPTION	REGISTER	OFFSET
PMM control 0	PMMCTL0	00h
PMM control 1	PMMCTL1	02h
SVS high-side control	SVSMHCTL	04h
SVS low-side control	SVSMLCTL	06h
PMM interrupt flags	PMMIFG	0Ch
PMM interrupt enable	PMMIE	0Eh
PMM power mode 5 control 0	PM5CTL0	10h

表 6-47. Flash Control Registers (Base Address: 0140h)

REGISTER DESCRIPTION	REGISTER	OFFSET
Flash control 1	FCTL1	00h
Flash control 3	FCTL3	04h
Flash control 4	FCTL4	06h

表 6-48. CRC16 Registers (Base Address: 0150h)

REGISTER DESCRIPTION	REGISTER	OFFSET
CRC data input	CRC16DI	00h
CRC data input reverse byte	CRC16DIRB	02h
CRC result	CRCINIRES	04h
CRC result reverse byte	CRCRESR	06h

表 6-49. RAM Control Registers (Base Address: 0158h)

REGISTER DESCRIPTION	REGISTER	OFFSET
RAM control 0	RCCTL0	00h

表 6-50. Watchdog Registers (Base Address: 015Ch)

REGISTER DESCRIPTION	REGISTER	OFFSET
Watchdog timer control	WDTCTL	00h

表 6-51. UCS Registers (Base Address: 0160h)

REGISTER DESCRIPTION	REGISTER	OFFSET
UCS control 0	UCSCTL0	00h
UCS control 1	UCSCTL1	02h
UCS control 2	UCSCTL2	04h
UCS control 3	UCSCTL3	06h
UCS control 4	UCSCTL4	08h
UCS control 5	UCSCTL5	0Ah
UCS control 6	UCSCTL6	0Ch
UCS control 7	UCSCTL7	0Eh

版权 © 2015–2018, Texas Instruments Incorporated

表 6-51. UCS Registers (Base Address: 0160h) (continued)

REGISTER DESCRIPTION	REGISTER	OFFSET
UCS control 8	UCSCTL8	10h

表 6-52. SYS Registers (Base Address: 0180h)

REGISTER DESCRIPTION	REGISTER	OFFSET
System control	SYSCTL	00h
Bootloader configuration area	SYSBSLC	02h
JTAG mailbox control	SYSJMBC	06h
JTAG mailbox input 0	SYSJMBI0	08h
JTAG mailbox input 1	SYSJMBI1	0Ah
JTAG mailbox output 0	SYSJMBO0	0Ch
JTAG mailbox output 1	SYSJMBO1	0Eh
Bus error vector generator	SYSBERRIV	18h
User NMI vector generator	SYSUNIV	1Ah
System NMI vector generator	SYSSNIV	1Ch
Reset vector generator	SYSRSTIV	1Eh

表 6-53. Shared Reference Registers (Base Address: 01B0h)

REGISTER DESCRIPTION	REGISTER	OFFSET
Shared reference control	REFCTL	00h

表 6-54. Port Mapping Controller (Base Address: 01C0h)

REGISTER DESCRIPTION	REGISTER	OFFSET
Port mapping password	PMAPPWD	00h
Port mapping control	PMAPCTL	02h

表 6-55. Port Mapping for Port P1 (Base Address: 01C8h)

REGISTER DESCRIPTION	REGISTER	OFFSET
Port P1.0 mapping	P1MAP0	00h
Port P1.1 mapping	P1MAP1	01h
Port P1.2 mapping	P1MAP2	02h
Port P1.3 mapping	P1MAP3	03h
Port P1.4 mapping	P1MAP4	04h
Port P1.5 mapping	P1MAP5	05h
Port P1.6 mapping	P1MAP6	06h
Port P1.7 mapping	P1MAP7	07h

表 6-56. Port Mapping for Port P2 (Base Address: 01D0h)

REGISTER DESCRIPTION	REGISTER	OFFSET
Port P2.0 mapping	P2MAP0	00h
Port P2.1 mapping	P2MAP2	01h
Port P2.2 mapping	P2MAP2	02h
Port P2.3 mapping	P2MAP3	03h
Port P2.4 mapping	P2MAP4	04h
Port P2.5 mapping	P2MAP5	05h
Port P2.6 mapping	P2MAP6	06h
Port P2.7 mapping	P2MAP7	07h

表 6-57. Port Mapping for Port P3 (Base Address: 01D8h)

REGISTER DESCRIPTION	REGISTER	OFFSET
Port P3.0 mapping	P3MAP0	00h
Port P3.1 mapping	P3MAP3	01h
Port P3.2 mapping	P3MAP2	02h
Port P3.3 mapping	P3MAP3	03h
Port P3.4 mapping	P3MAP4	04h
Port P3.5 mapping	P3MAP5	05h
Port P3.6 mapping	P3MAP6	06h
Port P3.7 mapping	P3MAP7	07h

表 6-58. Port P1, P2 Registers (Base Address: 0200h)

REGISTER DESCRIPTION	REGISTER	OFFSET
Port P1 input	P1IN	00h
Port P1 output	P1OUT	02h
Port P1 direction	P1DIR	04h
Port P1 resistor enable	P1REN	06h
Port P1 drive strength	P1DS	08h
Port P1 selection	P1SEL	0Ah
Port P1 interrupt vector word	P1IV	0Eh
Port P1 interrupt edge select	P1IES	18h
Port P1 interrupt enable	P1IE	1Ah
Port P1 interrupt flag	P1IFG	1Ch
Port P2 input	P2IN	01h
Port P2 output	P2OUT	03h
Port P2 direction	P2DIR	05h
Port P2 resistor enable	P2REN	07h
Port P2 drive strength	P2DS	09h
Port P2 selection	P2SEL	0Bh
Port P2 interrupt vector word	P2IV	1Eh
Port P2 interrupt edge select	P2IES	19h
Port P2 interrupt enable	P2IE	1Bh
Port P2 interrupt flag	P2IFG	1Dh

表 6-59. Port P3, P4 Registers (Base Address: 0220h)

REGISTER DESCRIPTION	REGISTER	OFFSET
Port P3 input	P3IN	00h
Port P3 output	P3OUT	02h
Port P3 direction	P3DIR	04h
Port P3 resistor enable	P3REN	06h
Port P3 drive strength	P3DS	08h
Port P3 selection	P3SEL	0Ah
Port P4 input	P4IN	01h
Port P4 output	P4OUT	03h
Port P4 direction	P4DIR	05h
Port P4 resistor enable	P4REN	07h
Port P4 drive strength	P4DS	09h
Port P4 selection	P4SEL	0Bh

版权 © 2015–2018, Texas Instruments Incorporated

表 6-60. Port P5, P6 Registers (Base Address: 0240h)

REGISTER DESCRIPTION	REGISTER	OFFSET
Port P5 input	P5IN	00h
Port P5 output	P5OUT	02h
Port P5 direction	P5DIR	04h
Port P5 resistor enable	P5REN	06h
Port P5 drive strength	P5DS	08h
Port P5 selection	P5SEL	0Ah
Port P6 input	P6IN	01h
Port P6 output	P6OUT	03h
Port P6 direction	P6DIR	05h
Port P6 resistor enable	P6REN	07h
Port P6 drive strength	P6DS	09h
Port P6 selection	P6SEL	0Bh

表 6-61. Port P7, P8 Registers (Base Address: 0260h)

REGISTER DESCRIPTION	REGISTER	OFFSET
Port P7 input	P7IN	00h
Port P7 output	P7OUT	02h
Port P7 direction	P7DIR	04h
Port P7 resistor enable	P7REN	06h
Port P7 drive strength	P7DS	08h
Port P7 selection	P7SEL	0Ah
Port P8 input	P8IN	01h
Port P8 output	P8OUT	03h
Port P8 direction	P8DIR	05h
Port P8 resistor enable	P8REN	07h
Port P8 drive strength	P8DS	09h
Port P8 selection	P8SEL	0Bh

表 6-62. Port P9 Registers (Base Address: 0280h)

REGISTER DESCRIPTION	REGISTER	OFFSET
Port P9 input	P9IN	00h
Port P9 output	P9OUT	02h
Port P9 direction	P9DIR	04h
Port P9 resistor enable	P9REN	06h
Port P9 drive strength	P9DS	08h
Port P9 selection	P9SEL	0Ah

表 6-63. Port J Registers (Base Address: 0320h)

REGISTER DESCRIPTION	REGISTER	OFFSET
Port PJ input	PJIN	00h
Port PJ output	PJOUT	02h
Port PJ direction	PJDIR	04h
Port PJ resistor enable	PJREN	06h
Port PJ drive strength	PJDS	08h
Port PJ selection	PJSEL	0Ah

表 6-64. TA0 Registers (Base Address: 0340h)

REGISTER DESCRIPTION	REGISTER	OFFSET
TA0 control	TA0CTL	00h
Capture/compare control 0	TA0CCTL0	02h
Capture/compare control 1	TA0CCTL1	04h
Capture/compare control 2	TA0CCTL2	06h
TA0 counter	TA0R	10h
Capture/compare 0	TA0CCR0	12h
Capture/compare 1	TA0CCR1	14h
Capture/compare 2	TA0CCR2	16h
TA0 expansion 0	TA0EX0	20h
TA0 interrupt vector	TA0IV	2Eh

表 6-65. TA1 Registers (Base Address: 0380h)

REGISTER DESCRIPTION	REGISTER	OFFSET
TA1 control	TA1CTL	00h
Capture/compare control 0	TA1CCTL0	02h
Capture/compare control 1	TA1CCTL1	04h
TA1 counter	TA1R	10h
Capture/compare 0	TA1CCR0	12h
Capture/compare 1	TA1CCR1	14h
TA1 expansion 0	TA1EX0	20h
TA1 interrupt vector	TA1IV	2Eh

表 6-66. TA2 Registers (Base Address: 0400h)

REGISTER DESCRIPTION	REGISTER	OFFSET
TA2 control	TA2CTL	00h
Capture/compare control 0	TA2CCTL0	02h
Capture/compare control 1	TA2CCTL1	04h
TA2 counter	TA2R	10h
Capture/compare 0	TA2CCR0	12h
Capture/compare 1	TA2CCR1	14h
TA2 expansion 0	TA2EX0	20h
TA2 interrupt vector	TA2IV	2Eh

表 6-67. TA3 Registers (Base Address: 0440h)

REGISTER DESCRIPTION	REGISTER	OFFSET
TA3 control	TA3CTL	00h
Capture/compare control 0	TA3CCTL0	02h
Capture/compare control 1	TA3CCTL1	04h
TA3 counter	TA3R	10h
Capture/compare 0	TA3CCR0	12h
Capture/compare 1	TA3CCR1	14h
TA3 expansion 0	TA3EX0	20h
TA3 interrupt vector	TA3IV	2Eh

版权 © 2015–2018, Texas Instruments Incorporated

表 6-68. Backup Memory Registers (Base Address: 0480h)

REGISTER DESCRIPTION	REGISTER	OFFSET
Backup memory 0	BAKMEM0	00h
Backup memory 1	BAKMEM1	02h
Backup memory 2	BAKMEM2	04h
Backup memory 3	BAKMEM3	06h

表 6-69. RTC_C Registers (Base Address: 04A0h)

REGISTER DESCRIPTION	REGISTER	OFFSET
RTC control 0	RTCCTL0	00h
RTC password	RTCPWD	01h
RTC control 1	RTCCTL1	02h
RTC control 3	RTCCTL3	03h
RTC offset calibration	RTCOCAL	04h
RTC temperature compensation	RTCTCMP	06h
RTC prescaler 0 control	RTCPS0CTL	08h
RTC prescaler 1 control	RTCPS1CTL	0Ah
RTC prescaler 0	RTCPS0	0Ch
RTC prescaler 1	RTCPS1	0Dh
RTC interrupt vector word	RTCIV	0Eh
RTC seconds	RTCSEC	10h
RTC minutes	RTCMIN	11h
RTC hours	RTCHOUR	12h
RTC day of week	RTCDOW	13h
RTC days	RTCDAY	14h
RTC month	RTCMON	15h
RTC year	RTCYEAR	16h
RTC alarm minutes	RTCAMIN	18h
RTC alarm hours	RTCAHOUR	19h
RTC alarm day of week	RTCADOW	1Ah
RTC alarm days	RTCADAY	1Bh
Binary-to-BCD conversion	BIN2BCD	1Ch
BCD-to-binary conversion	BCD2BIN	1Eh

表 6-70. 32-Bit Hardware Multiplier Registers (Base Address: 04C0h)

REGISTER DESCRIPTION	REGISTER	OFFSET
16-bit operand 1 – multiply	MPY	00h
16-bit operand 1 – signed multiply	MPYS	02h
16-bit operand 1 – multiply accumulate	MAC	04h
16-bit operand 1 – signed multiply accumulate	MACS	06h
16-bit operand 2	OP2	08h
16 × 16 result low word	RESLO	0Ah
16 × 16 result high word	RESHI	0Ch
16 × 16 sum extension	SUMEXT	0Eh
32-bit operand 1 – multiply low word	MPY32L	10h
32-bit operand 1 – multiply high word	MPY32H	12h
32-bit operand 1 – signed multiply low word	MPYS32L	14h
32-bit operand 1 – signed multiply high word	MPYS32H	16h
32-bit operand 1 – multiply accumulate low word	MAC32L	18h
32-bit operand 1 – multiply accumulate high word	MAC32H	1Ah
32-bit operand 1 – signed multiply accumulate low word	MACS32L	1Ch
32-bit operand 1 – signed multiply accumulate high word	MACS32H	1Eh
32-bit operand 2 – low word	OP2L	20h
32-bit operand 2 – high word	OP2H	22h
32 × 32 result 0 – least significant word	RES0	24h
32 × 32 result 1	RES1	26h
32 × 32 result 2	RES2	28h
32 × 32 result 3 – most significant word	RES3	2Ah
MPY32 control 0	MPY32CTL0	2Ch

表 6-71. DMA General Control Registers (Base Address: 0500h)

REGISTER DESCRIPTION	REGISTER	OFFSET
DMA module control 0	DMACTL0	00h
DMA module control 1	DMACTL1	02h
DMA module control 2	DMACTL2	04h
DMA module control 3	DMACTL3	06h
DMA module control 4	DMACTL4	08h
DMA interrupt vector	DMAIV	0Eh

表 6-72. DMA Channel 0 Registers (Base Address: 0500h)

REGISTER DESCRIPTION	REGISTER	OFFSET
DMA channel 0 control	DMA0CTL	10h
DMA channel 0 source address low	DMA0SAL	12h
DMA channel 0 source address high	DMA0SAH	14h
DMA channel 0 destination address low	DMA0DAL	16h
DMA channel 0 destination address high	DMA0DAH	18h
DMA channel 0 transfer size	DMA0SZ	1Ah

版权 © 2015–2018, Texas Instruments Incorporated

表 6-73. DMA Channel 1 Registers (Base Address: 0500h)

REGISTER DESCRIPTION	REGISTER	OFFSET
DMA channel 1 control	DMA1CTL	20h
DMA channel 1 source address low	DMA1SAL	22h
DMA channel 1 source address high	DMA1SAH	24h
DMA channel 1 destination address low	DMA1DAL	26h
DMA channel 1 destination address high	DMA1DAH	28h
DMA channel 1 transfer size	DMA1SZ	2Ah

表 6-74. DMA Channel 2 Registers (Base Address: 0500h)

REGISTER DESCRIPTION	REGISTER	OFFSET
DMA channel 2 control	DMA2CTL	30h
DMA channel 2 source address low	DMA2SAL	32h
DMA channel 2 source address high	DMA2SAH	34h
DMA channel 2 destination address low	DMA2DAL	36h
DMA channel 2 destination address high	DMA2DAH	38h
DMA channel 2 transfer size	DMA2SZ	3Ah

表 6-75. eUSCI_A0 Registers (Base Address: 05C0h)

REGISTER DESCRIPTION	REGISTER	OFFSET
eUSCI_A control word 0	UCA0CTLW0	00h
eUSCI _A control word 1	UCA0CTLW1	02h
eUSCI_A baud rate 0	UCA0BR0	06h
eUSCI_A baud rate 1	UCA0BR1	07h
eUSCI_A modulation control	UCA0MCTLW	08h
eUSCI_A status	UCA0STAT	0Ah
eUSCI_A receive buffer	UCA0RXBUF	0Ch
eUSCI_A transmit buffer	UCA0TXBUF	0Eh
eUSCI_A LIN control	UCA0ABCTL	10h
eUSCI_A IrDA transmit control	UCA0IRTCTL	12h
eUSCI_A IrDA receive control	UCA0IRRCTL	13h
eUSCI_A interrupt enable	UCA0IE	1Ah
eUSCI_A interrupt flags	UCA0IFG	1Ch
eUSCI_A interrupt vector word	UCA0IV	1Eh

表 6-76. eUSCI_A1 Registers (Base Address:05E0h)

REGISTER DESCRIPTION	REGISTER	OFFSET
eUSCI_A control word 0	UCA1CTLW0	00h
eUSCI _A control word 1	UCA1CTLW1	02h
eUSCI_A baud rate 0	UCA1BR0	06h
eUSCI_A baud rate 1	UCA1BR1	07h
eUSCI_A modulation control	UCA1MCTLW	08h
eUSCI_A status	UCA1STAT	0Ah
eUSCI_A receive buffer	UCA1RXBUF	0Ch
eUSCI_A transmit buffer	UCA1TXBUF	0Eh
eUSCI_A LIN control	UCA1ABCTL	10h
eUSCI_A IrDA transmit control	UCA1IRTCTL	12h
eUSCI_A IrDA receive control	UCA1IRRCTL	13h
eUSCI_A interrupt enable	UCA1IE	1Ah
eUSCI_A interrupt flags	UCA1IFG	1Ch
eUSCI_A interrupt vector word	UCA1IV	1Eh

表 6-77. eUSCI_A2 Registers (Base Address:0600h)

REGISTER DESCRIPTION	REGISTER	OFFSET
eUSCI_A control word 0	UCA2CTLW0	00h
eUSCI _A control word 1	UCA2CTLW1	02h
eUSCI_A baud rate 0	UCA2BR0	06h
eUSCI_A baud rate 1	UCA2BR1	07h
eUSCI_A modulation control	UCA2MCTLW	08h
eUSCI_A status	UCA2STAT	0Ah
eUSCI_A receive buffer	UCA2RXBUF	0Ch
eUSCI_A transmit buffer	UCA2TXBUF	0Eh
eUSCI_A LIN control	UCA2ABCTL	10h
eUSCI_A IrDA transmit control	UCA2IRTCTL	12h
eUSCI_A IrDA receive control	UCA2IRRCTL	13h
eUSCI_A interrupt enable	UCA2IE	1Ah
eUSCI_A interrupt flags	UCA2IFG	1Ch
eUSCI_A interrupt vector word	UCA2IV	1Eh

版权 © 2015–2018, Texas Instruments Incorporated

表 6-78. eUSCI_B0 Registers (Base Address: 0640h)

REGISTER DESCRIPTION	REGISTER	OFFSET
eUSCI_B control word 0	UCB0CTLW0	00h
eUSCI_B control word 1	UCB0CTLW1	02h
eUSCI_B bit rate 0	UCB0BR0	06h
eUSCI_B bit rate 1	UCB0BR1	07h
eUSCI_B status word	UCB0STATW	08h
eUSCI_B byte counter threshold	UCB0TBCNT	0Ah
eUSCI_B receive buffer	UCB0RXBUF	0Ch
eUSCI_B transmit buffer	UCB0TXBUF	0Eh
eUSCI_B I2C own address 0	UCB0I2COA0	14h
eUSCI_B I2C own address 1	UCB0I2COA1	16h
eUSCI_B I2C own address 2	UCB0I2COA2	18h
eUSCI_B I2C own address 3	UCB0I2COA3	1Ah
eUSCI_B received address	UCB0ADDRX	1Ch
eUSCI_B address mask	UCB0ADDMASK	1Eh
eUSCI I2C slave address	UCB0I2CSA	20h
eUSCI interrupt enable	UCB0IE	2Ah
eUSCI interrupt flags	UCB0IFG	2Ch
eUSCI interrupt vector word	UCB0IV	2Eh

表 6-79. ADC10_A Registers (Base Address: 0740h)

REGISTER DESCRIPTION	REGISTER	OFFSET
ADC10_A control 0	ADC10CTL0	00h
ADC10_A control 1	ADC10CTL1	02h
ADC10_A control 2	ADC10CTL2	04h
ADC10_A window comparator low threshold	ADC10LO	06h
ADC10_A window comparator high threshold	ADC10HI	08h
ADC10_A memory control 0	ADC10MCTL0	0Ah
ADC10_A conversion memory	ADC10MCTL0	12h
ADC10_A interrupt enable	ADC10IE	1Ah
ADC10_A interrupt flags	ADC10IGH	1Ch
ADC10_A interrupt vector word	ADC10IV	1Eh

表 6-80. SD24_B Registers (Base Address: 0800h)

REGISTER DESCRIPTION	REGISTER	OFFSET
SD24_B control 0	SD24BCTL0	00h
SD24_B control 1	SD24BCTL1	02h
SD24_B interrupt flag	SD24BIFG	0Ah
SD24_B interrupt enable	SD24BIE	0Ch
SD24_B interrupt vector	SD24BIV	0Eh
SD24_B converter 0 control	SD24BCCTL0	10h
SD24_B converter 0 input control	SD24BINCTL0	12h
SD24_B converter 0 OSR control	SD24BOSR0	14h
SD24_B converter 0 preload	SD24BPRE0	16h
SD24_B converter 1 control	SD24BCCTL1	18h
SD24_B converter 1 input control	SD24BINCTL1	1Ah
SD24_B converter 1 OSR control	SD24BOSR1	1Ch
SD24_B converter 1 preload	SD24BPRE1	1Eh
SD24_B converter 2 control	SD24BCCTL2	20h
SD24_B converter 2 input control	SD24BINCTL2	22h
SD24_B converter 2 OSR control	SD24BOSR2	24h
SD24_B converter 2 preload	SD24BPRE2	26h
SD24_B converter 0 conversion memory low word	SD24BMEML0	50h
SD24_B converter 0 conversion memory high word	SD24BMEMH0	52h
SD24_B converter 1 conversion memory low word	SD24BMEML1	54h
SD24_B converter 1 conversion memory high word	SD24BMEMH1	56h
SD24_B converter 2 conversion memory low word	SD24BMEML2	58h
SD24_B converter 2 conversion memory high word	SD24BMEMH2	5Ah

表 6-81. Auxiliary Supplies Registers (Base Address: 09E0h)

REGISTER DESCRIPTION	REGISTER	OFFSET
Auxiliary supply control 0	AUXCTL0	00h
Auxiliary supply control 1	AUXCTL1	02h
Auxiliary supply control 2	AUXCTL2	04h
AUX2 charger control	AUX2CHCTL	12h
AUX3 charger control	AUX3CHCTL	14h
AUX ADC control	AUXADCCTL	16h
AUX interrupt flag	AUXIFG	1Ah
AUX interrupt enable	AUXIE	1Ch
AUX interrupt vector word	AUXIV	1Eh

版权 © 2015–2018, Texas Instruments Incorporated

表 6-82. LCD_C Registers (Base Address: 0A00h)

REGISTER DESCRIPTION	REGISTER	OFFSET
LCD_C control 0	LCDCCTL0	000h
LCD_C control 1	LCDCCTL1	002h
LCD_C blinking control	LCDCBLKCTL	004h
LCD_C memory control	LCDCMEMCTL	006h
LCD_C voltage control	LCDCVCTL	008h
LCD_C port control 0	LCDCPCTL0	00Ah
LCD_C port control 1	LCDCPCTL1	00Ch
LCD_C port control 2	LCDCPCTL2	00Eh
LCD_C charge pump control	LCDCCPCTL	012h
LCD_C interrupt vector	LCDCIV	01Eh
Static and 2 to 4 mux modes		
LCD_C memory 1	LCDM1	020h
LCD_C memory 2	LCDM2	021h
⋮	⋮	⋮
LCD_C memory 20	LCDM20	033h
LCD_C blinking memory 1	LCDBM1	040h
LCD_C blinking memory 2	LCDBM2	041h
⋮	⋮	⋮
LCD_C blinking memory 20	LCDBM20	053h
5 to 8 mux modes		
LCD_C memory 1	LCDM1	020h
LCD_C memory 2	LCDM2	021h
⋮	⋮	⋮
LCD_C memory 40	LCDM40	047h

6.15 Identification

6.15.1 Revision Identification

The device revision information is shown as part of the top-side marking on the device package. The device-specific errata sheet describes these markings. For links to all of the errata sheets for the devices in this data sheet, see 节 8.4.

The hardware revision is also stored in the Device Descriptor structure in the Info Block section. For details on this value, see the "Hardware Revision" entries in 节 6.13.

6.15.2 Device Identification

The device type can be identified from the top-side marking on the device package. The device-specific errata sheet describes these markings. For links to all of the errata sheets for the devices in this data sheet, see 节 8.4.

A device identification value is also stored in the Device Descriptor structure in the Info Block section. For details on this value, see the "Device ID" entries in 节 6.13.

6.15.3 JTAG Identification

Programming through the JTAG interface, including reading and identifying the JTAG ID, is described in detail in the *MSP430 Programming With the JTAG Interface*.

版权 © 2015–2018, Texas Instruments Incorporated

7 Applications, Implementation, and Layout

注

Information in the following applications sections is not part of the TI component specification, and TI does not warrant its accuracy or completeness. TI's customers are responsible for determining suitability of components for their purposes. Customers should validate and test their design implementation to confirm system functionality.

The following resources provide application guidelines and best practices when designing with the MSP430F673xA and MSP430F672xA.

Implementation of a Single-Phase Electronic Watt-Hour Meter Using the MSP430F6736(A)

This application report describes the implementation of a single-phase electronic electricity meter using the Texas Instruments MSP430F673x(A) metering processor. It also includes the necessary information with regard to metrology software and hardware procedures for this single-chip implementation.

High-Accuracy Single-Phase Electricity Meter With Tamper Detection

This design, featuring the MSP430F6736(A) device, implements a highly-integrated single-chip electricity metering (e-meter) solution. Hardware and software design files are provided to enable calculation of various parameters for single phase energy measurement, such as RMS current and voltage, active and reactive power and energies, power factor, and frequency.

Features

- Low-power single-phase e-metering implementation
- Calculate parameters such as RMS current and voltage, active and reactive power and energies, power factor and frequency
- Based on the highly-integrated MSP430F67xx(A) family of metering-focused MCU SoCs
- Segment LCD is also implemented in this design
- RF modules can also be added to this design to enable unique connectivity solutions.

8 器件和文档支持

8.1 入门和后续步骤

要获得有助于您开发工作的 MSP430™系列器件、工具和库的更多相关信息，请访问 入门 页面。

8.2 Device Nomenclature

To designate the stages in the product development cycle, TI assigns prefixes to the part numbers of all MSP MCU devices. Each MSP MCU commercial family member has one of two prefixes: MSP or XMS. These prefixes represent evolutionary stages of product development from engineering prototypes (XMS) through fully qualified production devices (MSP).

XMS – Experimental device that is not necessarily representative of the final device's electrical specifications

MSP – Fully qualified production device

XMS devices are shipped against the following disclaimer:

"Developmental product is intended for internal evaluation purposes."

MSP devices have been characterized fully, and the quality and reliability of the device have been demonstrated fully. TI's standard warranty applies.

Predictions show that prototype devices (XMS) have a greater failure rate than the standard production devices. TI recommends that these devices not be used in any production system because their expected end-use failure rate still is undefined. Only qualified production devices are to be used.

TI device nomenclature also includes a suffix with the device family name. This suffix indicates the temperature range, package type, and distribution format. 图 8-1 provides a legend for reading the complete device name.

版权 © 2015–2018, Texas Instruments Incorporated

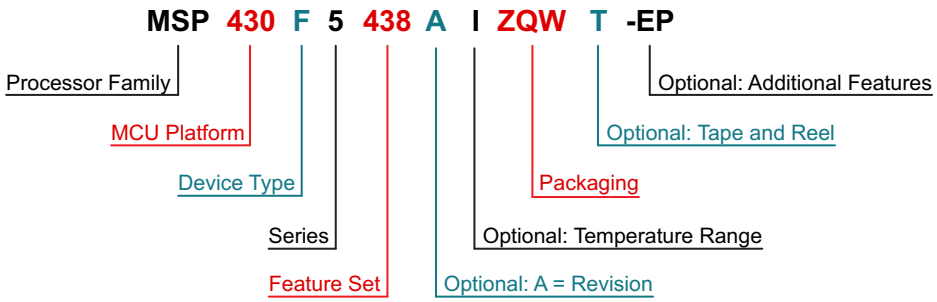

Processor Family	CC = Embedded RF Radio MSP = Mixed-Signal Processor XMS = Experimental Silicon PMS = Prototype Device	
MCU Platform	430 = MSP430 low-power microcontroller platform	
Device Type	**Memory Type** C = ROM F = Flash FR = FRAM G = Flash or FRAM (Value Line) L = No Nonvolatile Memory	**Specialized Application** AFE = Analog Front End BQ = Contactless Power CG = ROM Medical FE = Flash Energy Meter FG = Flash Medical FW = Flash Electronic Flow Meter
Series	1 = Up to 8 MHz 2 = Up to 16 MHz 3 = Legacy 4 = Up to 16 MHz with LCD	5 = Up to 25 MHz 6 = Up to 25 MHz with LCD 0 = Low-Voltage Series
Feature Set	Various levels of integration within a series	
Optional: A = Revision	N/A	
Optional: Temperature Range	S = 0°C to 50°C C = 0°C to 70°C I = –40°C to 85°C T = –40°C to 105°C	
Packaging	http://www.ti.com/packaging	
Optional: Tape and Reel	T = Small reel R = Large reel No markings = Tube or tray	
Optional: Additional Features	-EP = Enhanced Product (–40°C to 105°C) -HT = Extreme Temperature Parts (–55°C to 150°C) -Q1 = Automotive Q100 Qualified	

图 **8-1. Device Nomenclature**

8.3 工具与软件

所有 MSP 微控制器均受多种软件和硬件开发工具的支持。相关工具由 TI 以及多家第三方供应商提供。请参阅《MSP430 超低功耗 MCU – 工具与软件》了解所有工具。

表 8-1 列出 了 MSP430F673xA 和 MSP430F672xA MCU 的调试特性。关于可用特性的详细信息，请参见*《适用于 MSP430 的 Code Composer Studio 用户指南》*。

表 8-1. 硬件调试 特性

MSP430 架构	四线制 JTAG	两线制 JTAG	断点 (N)	范围断点	时钟控制	状态序列发生器	跟踪缓冲器	LPMx.5 调试支持
MSP430Xv2	有	有	3	有	是	否	否	否

设计套件与评估模块

MSP-TS430PZ100B - 适用于 MSP430F6x MCU 的 100 引脚目标开发板 MSP-TS430PZ100B 是一款独立的 100 引脚 ZIF 插座目标板，用于通过 JTAG 接口或 Spy-Bi-Wire（两线制 JTAG）协议在系统内对 MSP430 MCU 进行编程和调试。

适用于 MSP430F6x MCU 的 100 引脚目标开发板和 MSP-FET 编程器捆绑包 MSP-FET 是一款强大的闪存仿真工具，可在 MSP430 MCU 上快速开始应用开发。它包含 USB 调试接口，用于通过 JTAG 接口或节省引脚的 Spy-Bi-Wire（两线制 JTAG）协议在系统内对 MSP430 进行编程和调试。

EVM430-F6736 - 用于计量的 MSP430F6736 EVM EVM430-F6736 是一个基于 MSP430F6736 器件的单相电表评估模块。该电表不仅可连接至主电力线，而且还具备电压和电流输入，以及可用于防篡改设置的第三连接系统。

软件

MSP430Ware™ 软件 MSP430Ware 软件集合了所有 MSP430 器件的代码示例、数据表以及其他设计资源，打包提供给用户。除了提供已有 MSP430 设计资源的完整集合外，MSP430Ware 软件还包含名为 MSP 驱动程序库的高级 API。借助该库可以轻松地对 MSP430 硬件进行编程。MSP430Ware 软件以 CCS 组件或独立软件包两种形式提供。

适用于 MSP430 MCU 的能量测量设计中心 能量测量设计中心是一款快速开发工具，它使用 TI MSP430i20xx 和 MSP430F67xx 基于闪存的微控制器 (MCU) 实现能量测量。它包含能够在各种电源监控和能量测量应用（包括智能电网和楼宇自动化）中简化开发和加快设计的图形用户界面 (GUI)、文档、 软件库和示例。使用该设计中心，您无需编写任何代码即可配置、校准并查看结果。

MSP 驱动程序库 MSP 驱动程序库的抽象 API 提供易用的函数调用，无需直接操纵 MSP430 硬件的位与字节。完整的文档通过具有帮助意义的 API 指南交付，其中包括有关每个函数调用和经过验证的参数的详细信息。开发人员可使用驱动程序库函数以尽可能低的费用编写全部项目。

IEC60730 软件包 IEC60730 MSP430 软件包经过专门开发，用于协助客户达到 IEC 60730-1:2010（家用及类似用途的自动化电气控制 - 第 1 部分：一般要求）B 类产品的要求。其中涵盖家用电器、电弧检测器、电源转换器、电动工具、电动自行车及其他诸多产品。IEC60730 MSP430 软件包可以嵌入在 MSP430 MCU 中 运行的客户应用， 从而帮助客户简化其消费类器件在功能安全方面遵循 IEC 60730-1:2010 B 类规范的认证工作。

MSP430F673xA、MSP430F672xA 代码示例 根据不同应用需求配置各集成外设的每个 MSP 器件均具备相应的 C 代码示例。

版权 © 2015–2018, Texas Instruments Incorporated

电容式触摸软件库 可在 MSP430 MCU 启用电容触控功能的免费 C 代码库。MSP430 MCU 库版本 采用 多种电容触控实现方法，包括 RO 和 RC 方法。

MSP EnergyTrace™ 技术 适用于 MSP430 微控制器的 EnergyTrace 技术是基于电能的代码分析工具，适用于测量和显示应用的电能系统配置并帮助优化应用以实现超低功耗。

ULP（超低功耗）Advisor ULP Advisor™软件是一款辅助工具，旨在指导开发人员编写更为高效的代码，从而充分利用 MSP430 和 MSP432 微控制器 独特 功能。ULP Advisor 的目标人群是微控制器的资深开发者和开发新手，可以根据详尽的 ULP 检验表检查代码，以便最大限度地减少应用程序的能耗。在编译时，ULP Advisor 会提供通知和备注以突出显示代码中可以进一步优化的区域，进而实现更低功耗。

适用于 **MSP** 的定点数学库 MSP IQmath 和 Qmath 库是为 C 语言开发者提供的一套经过高度优化的高精度数学运算函数集合，能够将浮点算法无缝嵌入 MSP430 和 MSP432 器件的定点代码中。这些例程通常用于计算密集型实时 应用， 而优化的执行速度、高精度以及超低能耗通常是影响这些实时应用的关键因素。与使用浮点数学算法编写的同等代码相比，使用 IQmath 和 Qmath 库可以大幅提高执行速度并显著降低能耗。

适用于 **MSP430** 的浮点数学运算库 TI 在低功耗和低成本微控制器领域锐意创新，为您提供 MSPMATHLIB。此标量函数的浮点数学运算库，能够充分利用器件的智能外设，使速度最高达到标准 MSP430 数学函数的 26 倍。Mathlib 能够轻松集成到您的设计中。该运算库免费使用并集成在 Code Composer Studio IDE 和 IAR Embedded Workbench IDE 中。

开发工具

适用于 **MSP** 微控制器的 **Code Composer Studio™** 集成开发环境 Code Composer Studio (CCS) 集成开发环境 (IDE) 支持所有 MSP 微控制器器件。CCS 包含一整套用于开发和调试嵌入式 应用的工具。它包含了优化的 C/C++ 编译器、源代码编辑器、项目构建环境、调试器、描述器以及其他多种 功能。

命令行编程器 MSP Flasher 是一款基于 shell 的开源接口，可使用 JTAG 或 Spy-Bi-Wire (SBW) 通信通过 FET 编程器或 eZ430 对 MSP 微控制器进行编程。MSP Flasher 可用于将二进制文件（.txt 或 .hex 文件）直接下载到 MSP 微控制器，而无需使用 IDE。

MSP MCU 编程器和调试器 MSP-FET 是一款强大的仿真开发工具（通常称为调试探针），可帮助用户在 MSP 低功耗微控制器 (MCU) 中快速开发应用。创建 MCU 软件通常需要将生成的二进制程序下载到 MSP 器件中，从而进行验证和调试。

MSP-GANG 生产编程器 MSP Gang 编程器是一款 MSP430 或 MSP432 器件编程器，可同时对多达八个完全相同的 MSP430 或 MSP432 闪存或 FRAM 器件进行编程。MSP Gang 编程器可使用标准的 RS-232 或 USB 连接与主机 PC 相连并提供灵活的编程选项，允许用户完全自定义流程。

8.4 文档支持

以下文档对 MSP430F673xA 和 MSP430F672xA MCU 进行了介绍。www.ti.com.cn 网站上提供了这些文档的副本。

接收文档更新通知

要接收文档更新通知（包括器件勘误表），请转至 ti.com.cn 上相关器件的产品文件夹（请参阅节 8.5提供的链接）。请单击右上角的“通知我”按钮。点击注册后，即可收到产品信息更改每周摘要（如有）。有关更改的详细信息，请查阅已修订文档的修订历史记录。

勘误

《MSP430F6736A 器件勘误表》 说明了功能技术规格的已知例外情况。

《MSP430F6735A 器件勘误表》 说明了功能技术规格的已知例外情况。

《MSP430F6734A 器件勘误表》 说明了功能技术规格的已知例外情况。

《MSP430F6733A 器件勘误表》 说明了功能技术规格的已知例外情况。

《MSP430F6731A 器件勘误表》 说明了功能技术规格的已知例外情况。

《MSP430F6730A 器件勘误表》 说明了功能技术规格的已知例外情况。

《MSP430F6726A 器件勘误表》 说明了功能技术规格的已知例外情况。

《MSP430F6725A 器件勘误表》 说明了功能技术规格的已知例外情况。

《MSP430F6724A 器件勘误表》 说明了功能技术规格的已知例外情况。

《MSP430F6723A 器件勘误表》 说明了功能技术规格的已知例外情况。

《MSP430F6721A 器件勘误表》 说明了功能技术规格的已知例外情况。

《MSP430F6720A 器件勘误表》 说明了功能技术规格的已知例外情况。

用户指南

《MSP430x5xx 和 MSP430x6xx 系列用户指南》 详细介绍了该器件系列提供的模块和外设。

《MSP430™ 闪存器件引导加载程序 (BSL) 用户指南》 MSP430 引导加载程序 (BSL) 允许用户在原型设计、投产和维护等各阶段与 MSP430 微控制器中的嵌入式存储器进行通信。可编程存储器（闪存）和数据存储器 (RAM) 可根据相关要求进行变更。不要将此处的引导加载程序与某些数字信号处理器 (DSP) 中将外部存储器中的程序代码（和数据）自动加载到 DSP 内部存储器的引导装载程序混为一谈。

《通过 JTAG 接口对 MSP430 进行编程》 此文档介绍了使用 JTAG 通信端口擦除、编程和验证基于 MSP430 闪存和 FRAM 的微控制器系列的存储器模块所需的功能。此外，该文档还介绍了如何编程所有 MSP430 器件上均具备的 JTAG 访问安全保险丝。此文档介绍了使用标准四线制 JTAG 接口和两线制 JTAG 接口（也称为 Spy-Bi-Wire (SBW)）的器件访问。

《MSP430 硬件工具用户指南》 此手册介绍了 TI MSP-FET430 闪存仿真工具 (FET) 的硬件。FET 是针对 MSP430 超低功耗微控制器的程序开发工具。文中对提供的接口类型，即并行端口接口和 USB 接口进行了说明。

版权 © 2015–2018, Texas Instruments Incorporated

应用报告

《使用 MSP430F6736(A) 实施单相电子电表》 该应用报告介绍了如何使用德州仪器 (TI) MSP430F673x(A) 计量处理器实现单相电子电表。它还包含有关此单芯片实现的计量软件和硬件程序的必要信息。

《MSP430F67xx 与 MSP430F67xxA 器件之间的差异》 该应用报告介绍了 MSP430F67xxA 器件在非 A MSP430F67xx 器件基础上实现的增强功能。该应用报告介绍了在 MSP430F67xxA 中修复的 MSP430F67xx 勘误表以及向 MSP430F67xxA 器件 添加的 其他功能。此外，还比较了计量结果，以进一步展示 MSP430F67xxA 器件中实现的更改不会影响计量性能。

《MSP430 32kHz 晶体振荡器》 对于稳定的晶体振荡器，选择合适的晶振、正确的负载电路和适当的电路板布局布线至关重要。该应用报告总结了晶体振荡器的功能，介绍了用于选择合适的晶体以实现 MSP430 超低功耗运行的参数。此外，还给出了正确电路板布局的提示和示例。此外，为了确保振荡器在大规模生产后能够稳定运行，还可能需要进行一些振荡器测试，该文档中提供了有关这些测试的详细信息。

《MSP430 系统级 ESD 注意事项》 随着硅晶技术向更低电压方向发展以及设计具有成本效益的超低功耗组件的需求的出现，系统级 ESD 要求变得越来越苛刻。该应用报告介绍了三个不同的 ESD 主题，旨在帮助电路板设计人员和 OEM 理解并设计出稳健耐用的系统级设计。

《使用 MSP430 和段式 LCD 进行设计》 从智能电表，到电子货架标签 (ESL)，再到医疗设备，各式各样的应用 都需要使用段式液晶显示屏 (LCD) 为用户 提供相关信息。部分 MSP430™ 微控制器系列内置低功耗 LCD 驱动电路，MSP430 MCU 借此能够直接控制段式 LCD 玻璃。本应用手册可帮助您理解段式 LCD 的工作原理、MSP430 MCU 系列各种 LCD 模块的不同特性， 并提供了 LCD 硬件布线技巧、编写高效易用的 LCD 驱动软件的相关指导以及 具有不同 LCD 特性的 MSP430 器件的 产品组合概述， 旨在协助您进行器件选型。

8.5 相关链接

表 8-2 列出了快速访问链接。类别包括技术文档、支持与社区资源、工具与软件，以及申请样片或购买产品的快速链接。

表 8-2. 相关链接

器件	产品文件夹	立即订购	技术文档	工具与软件	支持和社区
MSP430F6736A	请单击此处	请单击此处	请单击此处	请单击此处	请单击此处
MSP430F6735A	请单击此处	请单击此处	请单击此处	请单击此处	请单击此处
MSP430F6734A	请单击此处	请单击此处	请单击此处	请单击此处	请单击此处
MSP430F6733A	请单击此处	请单击此处	请单击此处	请单击此处	请单击此处
MSP430F6731A	请单击此处	请单击此处	请单击此处	请单击此处	请单击此处
MSP430F6730A	请单击此处	请单击此处	请单击此处	请单击此处	请单击此处
MSP430F6726A	请单击此处	请单击此处	请单击此处	请单击此处	请单击此处
MSP430F6725A	请单击此处	请单击此处	请单击此处	请单击此处	请单击此处
MSP430F6724A	请单击此处	请单击此处	请单击此处	请单击此处	请单击此处
MSP430F6723A	请单击此处	请单击此处	请单击此处	请单击此处	请单击此处
MSP430F6721A	请单击此处	请单击此处	请单击此处	请单击此处	请单击此处
MSP430F6720A	请单击此处	请单击此处	请单击此处	请单击此处	请单击此处

8.6 社区资源

下列链接提供到 TI 社区资源的连接。链接的内容由各个分销商“按照原样”提供。这些内容并不构成 TI 技术规范，并且不一定反映 TI 的观点；请参见 TI 的 《使用条款》。

TI E2E™ 社区
TI 的工程师交流 (E2E) 社区. 此社区的创建目的是为了促进工程师之间协作。在 e2e.ti.com 中，您可以提问、共享知识、拓展思路，在同领域工程师的帮助下解决问题。

TI 嵌入式处理器维基网页
德州仪器 (TI) 嵌入式处理器维基网页。此网站的建立是为了帮助开发人员熟悉德州仪器 (TI) 的嵌入式处理器，并且也为了促进与这些器件相关的硬件和软件的总体知识的创新和增长。

8.7 商标

MSP430, MSP430Ware, EnergyTrace, ULP Advisor, 适用于 MSP 微控制器的 Code Composer Studio, E2E are trademarks of Texas Instruments.
All other trademarks are the property of their respective owners.

版权 © 2015–2018, Texas Instruments Incorporated

8.8 静电放电警告

ESD 可能会损坏该集成电路。德州仪器 (TI) 建议通过适当的预防措施处理所有集成电路。如果不遵守正确的处理措施和安装程序，可能会损坏集成电路。

ESD 的损坏小至导致微小的性能降级，大至整个器件故障。 精密的集成电路可能更容易受到损坏，这是因为非常细微的参数更改都可能会导致器件与其发布的规格不相符。

8.9 Export Control Notice

Recipient agrees to not knowingly export or re-export, directly or indirectly, any product or technical data (as defined by the U.S., EU, and other Export Administration Regulations) including software, or any controlled product restricted by other applicable national regulations, received from disclosing party under nondisclosure obligations (if any), or any direct product of such technology, to any destination to which such export or re-export is restricted or prohibited by U.S. or other applicable laws, without obtaining prior authorization from U.S. Department of Commerce and other competent Government authorities to the extent required by those laws.

8.10 Glossary

TI Glossary This glossary lists and explains terms, acronyms, and definitions.

9 机械、封装和可订购信息

以下页面包含机械、封装和可订购信息。这些信息是指定器件的最新可用数据。数据如有变更，恕不另行通知，且不会对此文档进行修订。如需获取此数据表的浏览器版本，请查阅左侧的导航栏。

PACKAGING INFORMATION

Orderable Device	Status (1)	Package Type	Package Drawing	Pins	Package Qty	Eco Plan (2)	Lead finish/ Ball material (6)	MSL Peak Temp (3)	Op Temp (°C)	Device Marking (4/5)	Samples
MSP430F6720AIPN	ACTIVE	LQFP	PN	80	119	RoHS & Green	NIPDAU	Level-3-260C-168 HR	-40 to 85	F6720A	Samples
MSP430F6720AIPNR	ACTIVE	LQFP	PN	80	1000	RoHS & Green	NIPDAU	Level-3-260C-168 HR	-40 to 85	F6720A	Samples
MSP430F6720AIPZ	ACTIVE	LQFP	PZ	100	90	RoHS & Green	NIPDAU	Level-3-260C-168 HR	-40 to 85	F6720A	Samples
MSP430F6720AIPZR	ACTIVE	LQFP	PZ	100	1000	RoHS & Green	NIPDAU	Level-3-260C-168 HR	-40 to 85	F6720A	Samples
MSP430F6721AIPN	ACTIVE	LQFP	PN	80	119	RoHS & Green	NIPDAU	Level-3-260C-168 HR	-40 to 85	F6721A	Samples
MSP430F6721AIPNR	ACTIVE	LQFP	PN	80	1000	RoHS & Green	NIPDAU	Level-3-260C-168 HR	-40 to 85	F6721A	Samples
MSP430F6721AIPZ	ACTIVE	LQFP	PZ	100	90	RoHS & Green	NIPDAU	Level-3-260C-168 HR	-40 to 85	F6721A	Samples
MSP430F6721AIPZR	ACTIVE	LQFP	PZ	100	1000	RoHS & Green	NIPDAU	Level-3-260C-168 HR	-40 to 85	F6721A	Samples
MSP430F6723AIPN	ACTIVE	LQFP	PN	80	119	RoHS & Green	NIPDAU	Level-3-260C-168 HR	-40 to 85	F6723A	Samples
MSP430F6723AIPNR	ACTIVE	LQFP	PN	80	1000	RoHS & Green	NIPDAU	Level-3-260C-168 HR	-40 to 85	F6723A	Samples
MSP430F6723AIPZ	ACTIVE	LQFP	PZ	100	90	RoHS & Green	NIPDAU	Level-3-260C-168 HR	-40 to 85	F6723A	Samples
MSP430F6723AIPZR	ACTIVE	LQFP	PZ	100	1000	RoHS & Green	NIPDAU	Level-3-260C-168 HR	-40 to 85	F6723A	Samples
MSP430F6724AIPN	ACTIVE	LQFP	PN	80	119	RoHS & Green	NIPDAU	Level-3-260C-168 HR	-40 to 85	F6724A	Samples
MSP430F6724AIPNR	ACTIVE	LQFP	PN	80	1000	RoHS & Green	NIPDAU	Level-3-260C-168 HR	-40 to 85	F6724A	Samples
MSP430F6724AIPZ	ACTIVE	LQFP	PZ	100	90	RoHS & Green	NIPDAU	Level-3-260C-168 HR	-40 to 85	F6724A	Samples
MSP430F6724AIPZR	ACTIVE	LQFP	PZ	100	1000	RoHS & Green	NIPDAU	Level-3-260C-168 HR	-40 to 85	F6724A	Samples
MSP430F6725AIPN	ACTIVE	LQFP	PN	80	119	RoHS & Green	NIPDAU	Level-3-260C-168 HR	-40 to 85	F6725A	Samples
MSP430F6725AIPNR	ACTIVE	LQFP	PN	80	1000	RoHS & Green	NIPDAU	Level-3-260C-168 HR	-40 to 85	F6725A	Samples
MSP430F6725AIPZ	ACTIVE	LQFP	PZ	100	90	RoHS & Green	NIPDAU	Level-3-260C-168 HR	-40 to 85	F6725A	Samples
MSP430F6725AIPZR	ACTIVE	LQFP	PZ	100	1000	RoHS & Green	NIPDAU	Level-3-260C-168 HR	-40 to 85	F6725A	Samples

Orderable Device	Status (1)	Package Type	Package Drawing	Pins	Package Qty	Eco Plan (2)	Lead finish/ Ball material (6)	MSL Peak Temp (3)	Op Temp (°C)	Device Marking (4/5)	Samples
MSP430F6726AIPN	ACTIVE	LQFP	PN	80	119	RoHS & Green	NIPDAU	Level-3-260C-168 HR	-40 to 85	F6726A	Samples
MSP430F6726AIPNR	ACTIVE	LQFP	PN	80	1000	RoHS & Green	NIPDAU	Level-3-260C-168 HR	-40 to 85	F6726A	Samples
MSP430F6726AIPZ	ACTIVE	LQFP	PZ	100	90	RoHS & Green	NIPDAU	Level-3-260C-168 HR	-40 to 85	F6726A	Samples
MSP430F6726AIPZR	ACTIVE	LQFP	PZ	100	1000	RoHS & Green	NIPDAU	Level-3-260C-168 HR	-40 to 85	F6726A	Samples
MSP430F6730AIPN	ACTIVE	LQFP	PN	80	119	RoHS & Green	NIPDAU	Level-3-260C-168 HR	-40 to 85	F6730A	Samples
MSP430F6730AIPNR	ACTIVE	LQFP	PN	80	1000	RoHS & Green	NIPDAU	Level-3-260C-168 HR	-40 to 85	F6730A	Samples
MSP430F6730AIPZ	ACTIVE	LQFP	PZ	100	90	RoHS & Green	NIPDAU	Level-3-260C-168 HR	-40 to 85	F6730A	Samples
MSP430F6730AIPZR	ACTIVE	LQFP	PZ	100	1000	RoHS & Green	NIPDAU	Level-3-260C-168 HR	-40 to 85	F6730A	Samples
MSP430F6731AIPN	ACTIVE	LQFP	PN	80	119	RoHS & Green	NIPDAU	Level-3-260C-168 HR	-40 to 85	F6731A	Samples
MSP430F6731AIPNR	ACTIVE	LQFP	PN	80	1000	RoHS & Green	NIPDAU	Level-3-260C-168 HR	-40 to 85	F6731A	Samples
MSP430F6731AIPZ	ACTIVE	LQFP	PZ	100	90	RoHS & Green	NIPDAU	Level-3-260C-168 HR	-40 to 85	F6731A	Samples
MSP430F6731AIPZR	ACTIVE	LQFP	PZ	100	1000	RoHS & Green	NIPDAU	Level-3-260C-168 HR	-40 to 85	F6731A	Samples
MSP430F6733AIPN	ACTIVE	LQFP	PN	80	119	RoHS & Green	NIPDAU	Level-3-260C-168 HR	-40 to 85	F6733A	Samples
MSP430F6733AIPNR	ACTIVE	LQFP	PN	80	1000	RoHS & Green	NIPDAU	Level-3-260C-168 HR	-40 to 85	F6733A	Samples
MSP430F6733AIPZ	ACTIVE	LQFP	PZ	100	90	RoHS & Green	NIPDAU	Level-3-260C-168 HR	-40 to 85	F6733A	Samples
MSP430F6733AIPZR	ACTIVE	LQFP	PZ	100	1000	RoHS & Green	NIPDAU	Level-3-260C-168 HR	-40 to 85	F6733A	Samples
MSP430F6734AIPN	ACTIVE	LQFP	PN	80	119	RoHS & Green	NIPDAU	Level-3-260C-168 HR	-40 to 85	F6734A	Samples
MSP430F6734AIPNR	ACTIVE	LQFP	PN	80	1000	RoHS & Green	NIPDAU	Level-3-260C-168 HR	-40 to 85	F6734A	Samples
MSP430F6734AIPZ	ACTIVE	LQFP	PZ	100	90	RoHS & Green	NIPDAU	Level-3-260C-168 HR	-40 to 85	F6734A	Samples
MSP430F6734AIPZR	ACTIVE	LQFP	PZ	100	1000	RoHS & Green	NIPDAU	Level-3-260C-168 HR	-40 to 85	F6734A	Samples
MSP430F6735AIPN	ACTIVE	LQFP	PN	80	119	RoHS & Green	NIPDAU	Level-3-260C-168 HR	-40 to 85	F6735A	Samples

Orderable Device	Status (1)	Package Type	Package Drawing	Pins	Package Qty	Eco Plan (2)	Lead finish/ Ball material (6)	MSL Peak Temp (3)	Op Temp (°C)	Device Marking (4/5)	Samples
MSP430F6735AIPNR	ACTIVE	LQFP	PN	80	1000	RoHS & Green	NIPDAU	Level-3-260C-168 HR	-40 to 85	F6735A	Samples
MSP430F6735AIPZ	ACTIVE	LQFP	PZ	100	90	RoHS & Green	NIPDAU	Level-3-260C-168 HR	-40 to 85	F6735A	Samples
MSP430F6735AIPZR	ACTIVE	LQFP	PZ	100	1000	RoHS & Green	NIPDAU	Level-3-260C-168 HR	-40 to 85	F6735A	Samples
MSP430F6736AIPN	ACTIVE	LQFP	PN	80	119	RoHS & Green	NIPDAU	Level-3-260C-168 HR	-40 to 85	F6736A	Samples
MSP430F6736AIPNR	ACTIVE	LQFP	PN	80	1000	RoHS & Green	NIPDAU	Level-3-260C-168 HR	-40 to 85	F6736A	Samples
MSP430F6736AIPZ	ACTIVE	LQFP	PZ	100	90	RoHS & Green	NIPDAU	Level-3-260C-168 HR	-40 to 85	F6736A	Samples
MSP430F6736AIPZR	ACTIVE	LQFP	PZ	100	1000	RoHS & Green	NIPDAU	Level-3-260C-168 HR	-40 to 85	F6736A	Samples

(1) The marketing status values are defined as follows:
ACTIVE: Product device recommended for new designs.
LIFEBUY: TI has announced that the device will be discontinued, and a lifetime-buy period is in effect.
NRND: Not recommended for new designs. Device is in production to support existing customers, but TI does not recommend using this part in a new design.
PREVIEW: Device has been announced but is not in production. Samples may or may not be available.
OBSOLETE: TI has discontinued the production of the device.

(2) **RoHS:** TI defines "RoHS" to mean semiconductor products that are compliant with the current EU RoHS requirements for all 10 RoHS substances, including the requirement that RoHS substance do not exceed 0.1% by weight in homogeneous materials. Where designed to be soldered at high temperatures, "RoHS" products are suitable for use in specified lead-free processes. TI may reference these types of products as "Pb-Free".
RoHS Exempt: TI defines "RoHS Exempt" to mean products that contain lead but are compliant with EU RoHS pursuant to a specific EU RoHS exemption.
Green: TI defines "Green" to mean the content of Chlorine (Cl) and Bromine (Br) based flame retardants meet JS709B low halogen requirements of <=1000ppm threshold. Antimony trioxide based flame retardants must also meet the <=1000ppm threshold requirement.

(3) MSL, Peak Temp. - The Moisture Sensitivity Level rating according to the JEDEC industry standard classifications, and peak solder temperature.

(4) There may be additional marking, which relates to the logo, the lot trace code information, or the environmental category on the device.

(5) Multiple Device Markings will be inside parentheses. Only one Device Marking contained in parentheses and separated by a "~" will appear on a device. If a line is indented then it is a continuation of the previous line and the two combined represent the entire Device Marking for that device.

(6) Lead finish/Ball material - Orderable Devices may have multiple material finish options. Finish options are separated by a vertical ruled line. Lead finish/Ball material values may wrap to two lines if the finish value exceeds the maximum column width.

Important Information and Disclaimer: The information provided on this page represents TI's knowledge and belief as of the date that it is provided. TI bases its knowledge and belief on information provided by third parties, and makes no representation or warranty as to the accuracy of such information. Efforts are underway to better integrate information from third parties. TI has taken and continues to take reasonable steps to provide representative and accurate information but may not have conducted destructive testing or chemical analysis on incoming materials and chemicals. TI and TI suppliers consider certain information to be proprietary, and thus CAS numbers and other limited information may not be available for release.

In no event shall TI's liability arising out of such information exceed the total purchase price of the TI part(s) at issue in this document sold by TI to Customer on an annual basis.

TRAY

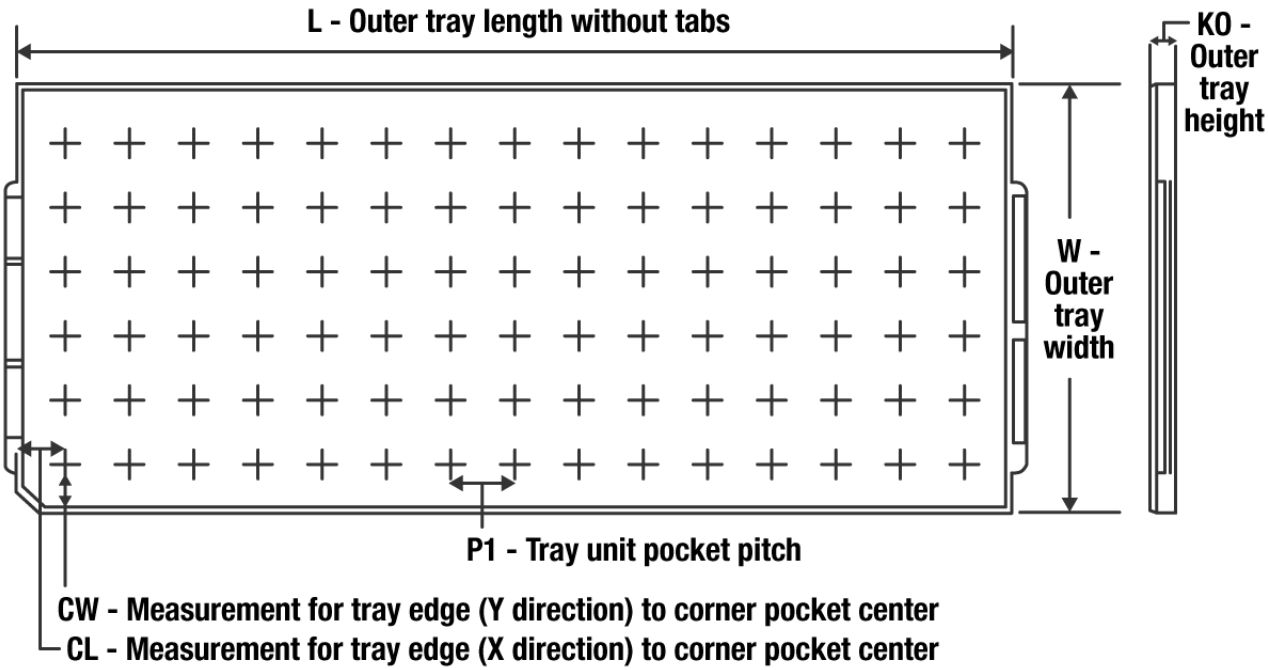

Chamfer on Tray corner indicates Pin 1 orientation of packed units.

*All dimensions are nominal

Device	Package Name	Package Type	Pins	SPQ	Unit array matrix	Max temperature (°C)	L (mm)	W (mm)	K0 (µm)	P1 (mm)	CL (mm)	CW (mm)
MSP430F6720AIPN	PN	LQFP	80	119	7 x 17	150	315	135.9	7620	17.9	14.3	13.95
MSP430F6721AIPZ	PZ	LQFP	100	90	6 x 15	150	315	135.9	7620	20.3	15.4	15.45
MSP430F6731AIPZ	PZ	LQFP	100	90	6 x 15	150	315	135.9	7620	20.3	15.4	15.45
MSP430F6733AIPN	PN	LQFP	80	119	7 x 17	150	315	135.9	7620	17.9	14.3	13.95
MSP430F6735AIPZ	PZ	LQFP	100	90	6 x 15	150	315	135.9	7620	20.3	15.4	15.45
MSP430F6736AIPZ	PZ	LQFP	100	90	6 x 15	150	315	135.9	7620	20.3	15.4	15.45

PN (S-PQFP-G80) **PLASTIC QUAD FLATPACK**

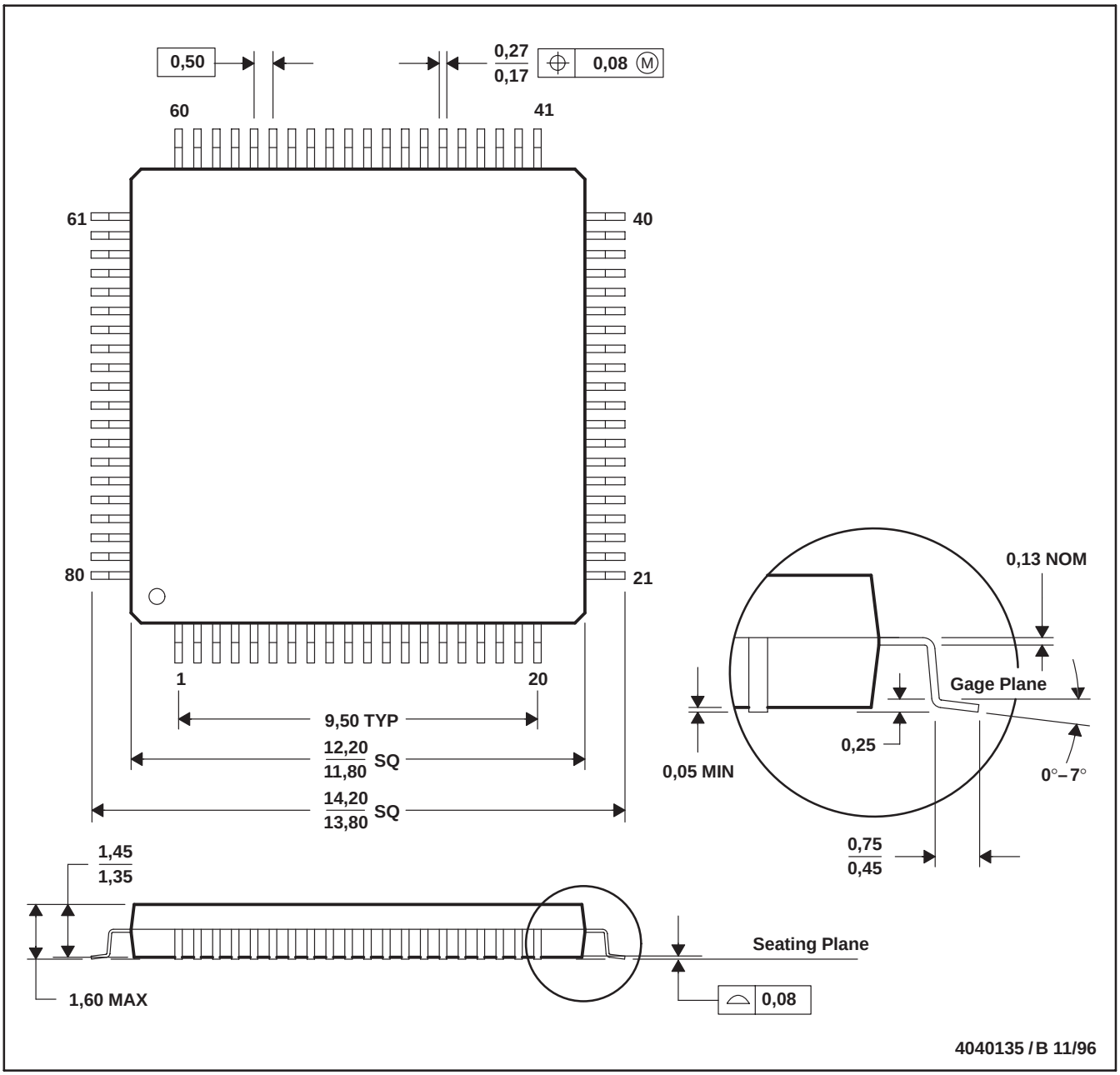

NOTES: A. All linear dimensions are in millimeters.
B. This drawing is subject to change without notice.
C. Falls within JEDEC MS-026

PZ (S-PQFP-G100) **PLASTIC QUAD FLATPACK**

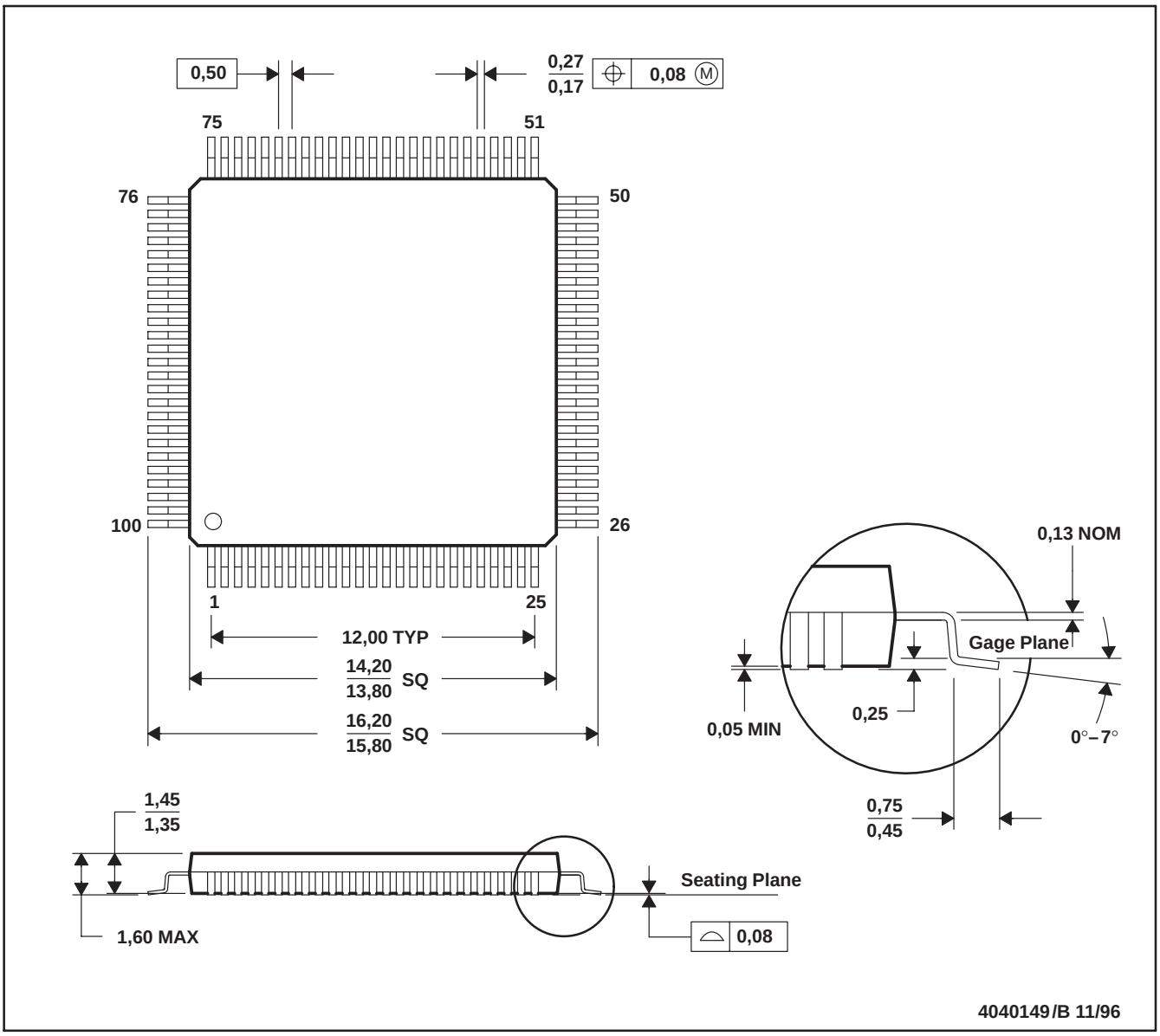

NOTES: A. All linear dimensions are in millimeters.
B. This drawing is subject to change without notice.
C. Falls within JEDEC MS-026

重要声明和免责声明

TI“按原样”提供技术和可靠性数据（包括数据表）、设计资源（包括参考设计）、应用或其他设计建议、网络工具、安全信息和其他资源，不保证没有瑕疵且不做出任何明示或暗示的担保，包括但不限于对适销性、某特定用途方面的适用性或不侵犯任何第三方知识产权的暗示担保。

这些资源可供使用 TI 产品进行设计的熟练开发人员使用。您将自行承担以下全部责任：(1) 针对您的应用选择合适的 TI 产品，(2) 设计、验证并测试您的应用，(3) 确保您的应用满足相应标准以及任何其他功能安全、信息安全、监管或其他要求。

这些资源如有变更，恕不另行通知。TI 授权您仅可将这些资源用于研发本资源所述的 TI 产品的应用。严禁对这些资源进行其他复制或展示。您无权使用任何其他 TI 知识产权或任何第三方知识产权。您应全额赔偿因在这些资源的使用中对 TI 及其代表造成的任何索赔、损害、成本、损失和债务，TI 对此概不负责。

TI 提供的产品受 TI 的销售条款或 ti.com 上其他适用条款/TI 产品随附的其他适用条款的约束。TI 提供这些资源并不会扩展或以其他方式更改 TI 针对 TI 产品发布的适用的担保或担保免责声明。

TI 反对并拒绝您可能提出的任何其他或不同的条款。

邮寄地址：Texas Instruments, Post Office Box 655303, Dallas, Texas 75265
Copyright © 2022，德州仪器 (TI) 公司