MSP430FW42x Mixed-Signal Microcontroller

FEATURES

- **Low Supply Voltage Range: 1.8 V to 3.6 V**
- **Ultra-Low-Power Consumption:**
  - **Active Mode: 200 µA at 1 MHz, 2.2 V**
  - **Standby Mode: 0.7 µA**
  - **Off Mode (RAM Retention): 0.1 µA**
- **Five Power-Saving Modes**
- **Wake Up From Standby Mode in Less Than 6 µs**
- **Frequency-Locked Loop, FLL+**
- **16-Bit RISC Architecture, 125-ns Instruction Cycle Time**
- **Scan Interface for Background Water, Heat, and Gas Volume Measurement**
- **16-Bit Timer_A With Three Capture/Compare Registers**
- **16-Bit Timer_A With Five Capture/Compare Registers**
- **Integrated LCD Driver for Up to 96 Segments**
- **On-Chip Comparator**
- **Serial Onboard Programming, No External Programming Voltage Needed Programmable Code Protection by Security Fuse**
- **Brownout Detector**
- **Supply Voltage Supervisor and Monitor With Programmable Level Detection**
- **Bootstrap Loader (BSL) in Flash Devices**
- **Family Members Include:**
  - **MSP430FW423**
    8KB + 256B Flash Memory, 256B RAM
  - **MSP430FW425**
    16KB + 256B Flash Memory, 512B RAM
  - **MSP430FW427**
    32KB + 256B Flash Memory, 1KB RAM
  - **MSP430FW428**
    48KB + 256B Flash Memory, 2KB RAM
  - **MSP430FW429**
    60KB + 256B Flash Memory, 2KB RAM
- **Available in 64-Pin Quad Flat Pack (QFP)**
- **For Complete Module Descriptions, See the *MSP430x4xx Family User's Guide*, Literature Number SLAU056**

APPLICATIONS

- **Analog Sensor Systems**
- **Digital Sensor Systems**
- **Gas, Heat, or Water Meters**
- **Industrial Meters**
- **Hand-Held Meters**

DESCRIPTION

The Texas Instruments MSP430™ family of ultra-low-power microcontrollers consists of several devices featuring different sets of peripherals targeted for various applications. The architecture, combined with five low-power modes, is optimized to achieve extended battery life in portable measurement applications. The device features a powerful 16-bit RISC CPU, 16-bit registers, and constant generators that contribute to maximum code efficiency. The digitally controlled oscillator (DCO) allows the device to wake up from low-power modes to active mode in less than 6 µs.

The MSP430FW42x series are microcontroller configurations with two built-in 16-bit timers, a comparator, 96 LCD segment drive capability, a scan interface, and 48 I/O pins.

Typical applications include sensor systems that capture analog signals, convert them to digital values, and process the data and transmit them to a host system. The comparator and timers make the configurations ideal for gas, heat, and water meters, industrial meters, counter applications, and hand-held meters.

Please be aware that an important notice concerning availability, standard warranty, and use in critical applications of Texas Instruments semiconductor products and disclaimers thereto appears at the end of this data sheet.
MSP430 is a trademark of Texas Instruments.

PRODUCTION DATA information is current as of publication date. Products conform to specifications per the terms of the Texas Instruments standard warranty. Production processing does not necessarily include testing of all parameters.

Copyright © 2003–2013, Texas Instruments Incorporated

This integrated circuit can be damaged by ESD. Texas Instruments recommends that all integrated circuits be handled with appropriate precautions. Failure to observe proper handling and installation procedures can cause damage.

ESD damage can range from subtle performance degradation to complete device failure. Precision integrated circuits may be more susceptible to damage because very small parametric changes could cause the device not to meet its published specifications.

Functional Block Diagram

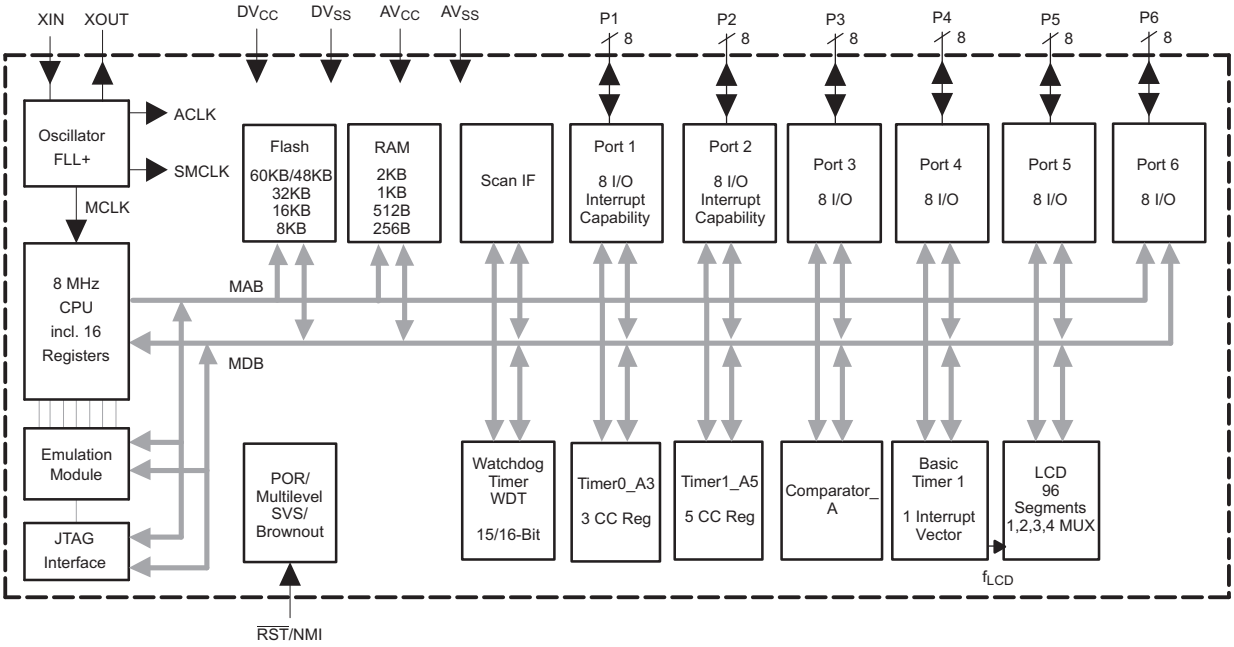

Copyright © 2003–2013, Texas Instruments Incorporated

Pin Designation

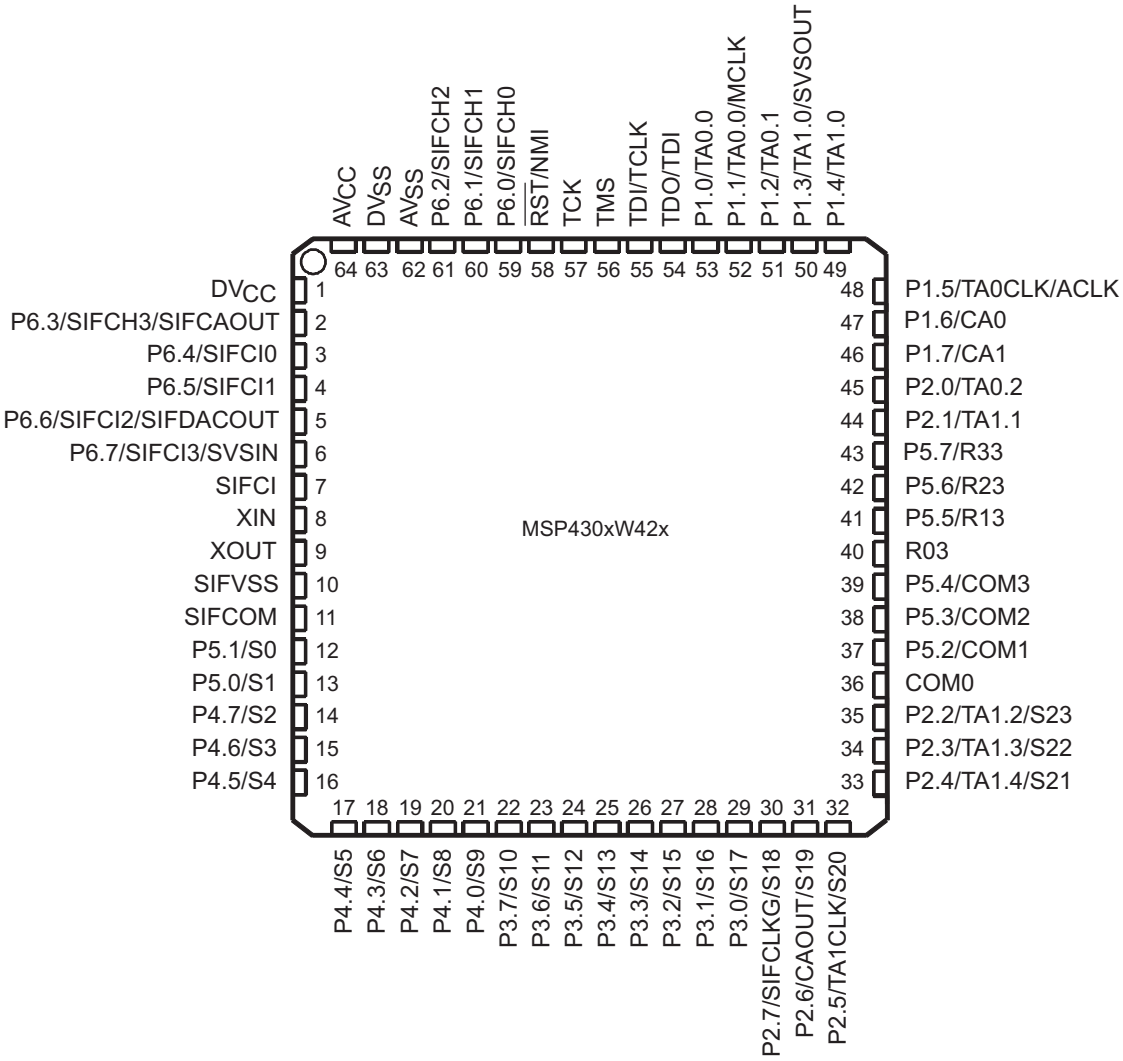

Table 1. Terminal Functions

TERMINAL		I/O	DESCRIPTION
NAME	NO.		
AV_{CC}	64		Analog supply voltage, positive terminal. Supplies SVS, brownout, oscillator, comparator_A, scan IF AFE, port 6, and LCD resistive divider circuitry; must not power up prior to DV_{CC}.
AV_{SS}	62		Analog supply voltage, negative terminal. Supplies SVS, brownout, oscillator, comparator_A, scan IF AFE. and port 6. Must be externally connected to DV_{SS}. Internally connected to DV_{SS}.
DV_{CC}	1		Digital supply voltage, positive terminal.
DV_{SS}	63		Digital supply voltage, negative terminal.
SIFVSS	10		Scan IF AFE reference supply voltage.
P1.0/TA0.0	53	I/O	General-purpose digital I/O Timer0_A. Capture: CCI0A input, compare: Out0 output BSL transmit
P1.1/TA0.0/MCLK	52	I/O	General-purpose digital I/O Timer0_A. Capture: CCI0B input MCLK output BSL receive Note: TA0.0 is only an input on this pin.
P1.2/TA0.1	51	I/O	General-purpose digital I/O Timer0_A, capture: CCI1A input, compare: Out1 output
P1.3/TA1.0/SVSOUT	50	I/O	General-purpose digital I/O Timer1_A, capture: CCI0B input SVS: output of SVS comparator Note: TA1.0 is only an input on this pin.
P1.4/TA1.0	49	I/O	General-purpose digital I/O Timer1_A, capture: CCI0A input, compare: Out0 output
P1.5/TA0CLK/ACLK	48	I/O	General-purpose digital I/O Input of Timer0_A clock Output of ACLK
P1.6/CA0	47	I/O	General-purpose digital I/O Comparator_A input
P1.7/CA1	46	I/O	General-purpose digital I/O Comparator_A input
P2.0/TA0.2	45	I/O	General-purpose digital I/O Timer0_A, capture: CCI2A input, compare: Out2 output
P2.1/TA1.1	44	I/O	General-purpose digital I/O Timer0_A, capture: CCI1A input, compare: Out1 output
P2.2/TA1.2/S23	35	I/O	General-purpose digital I/O Timer1_A, capture: CCI2A input, compare: Out2 output LCD segment output 23 (1)
P2.3/TA1.3/S22	34	I/O	General-purpose digital I/O Timer1_A, capture: CCI3A input, compare: Out3 output LCD segment output 22 (1)
P2.4/TA1.4/S21	33	I/O	General-purpose digital I/O Timer1_A, capture: CCI4A input, compare: Out4 output LCD segment output 21 (1)
P2.5/TA1CLK/S20	32	I/O	General-purpose digital I/O Iinput of Timer1_A clock LCD segment output 20 (1)
P2.6/CAOUT/S19	31	I/O	General-purpose digital I/O Comparator_A output LCD segment output 19 (1)
P2.7/SIFCLKG/S18	30	I/O	General-purpose digital I/O Scan IF, signal SIFCLKG from internal clock generator LCD segment output 18 (1)
P3.0/S17	29	I/O	General-purpose digital I/O LCD segment output 17 (1)
P3.1/S16	28	I/O	General-purpose digital I/O LCD segment output 16 (1)

(1) LCD function selected automatically when applicable LCD module control bits are set, not with PxSEL bits.

Copyright © 2003–2013, Texas Instruments Incorporated

Table 1. Terminal Functions (continued)

TERMINAL		I/O	DESCRIPTION
NAME	NO.		
P3.2/S15	27	I/O	General-purpose digital I/O LCD segment output 15 (1)
P3.3/S14	26	I/O	General-purpose digital I/O LCD segment output 14 (1)
P3.4/S13	25	I/O	General-purpose digital I/O LCD segment output 13 (1)
P3.5/S12	24	I/O	General-purpose digital I/O LCD segment output 12 (1)
P3.6/S11	23	I/O	General-purpose digital I/O LCD segment output 11 (1)
P3.7/S10	22	I/O	General-purpose digital I/O LCD segment output 10 (1)
P4.0/S9	21	I/O	General-purpose digital I/O LCD segment output 9 (1)
P4.1/S8	20	I/O	General-purpose digital I/O LCD segment output 8 (2)
P4.2/S7	19	I/O	General-purpose digital I/O LCD segment output 7 (2)
P4.3/S6	18	I/O	General-purpose digital I/O LCD segment output 6 (2)
P4.4/S5	17	I/O	General-purpose digital I/O LCD segment output 5 (2)
P4.5/S4	16	I/O	General-purpose digital I/O LCD segment output 4 (2)
P4.6/S3	15	I/O	General-purpose digital I/O LCD segment output 3 (2)
P4.7/S2	14	I/O	General-purpose digital I/O LCD segment output 2 (2)
P5.0/S1	13	I/O	General-purpose digital I/O LCD segment output 1 (2)
P5.1/S0	12	I/O	General-purpose digital I/O LCD segment output 0 (2)
COM0	36	O	Common output. COM0-3 are used for LCD backplanes
P5.2/COM1	37	I/O	General-purpose digital I/O Common output. COM0-3 are used for LCD backplanes
P5.3/COM2	38	I/O	General-purpose digital I/O Common output. COM0-3 are used for LCD backplanes
P5.4/COM3	39	I/O	General-purpose digital I/O Common output. COM0-3 are used for LCD backplanes
R03	40	I	Input port of fourth positive (lowest) analog LCD level (V5)
P5.5/R13	41	I/O	General-purpose digital I/O Input port of third most positive analog LCD level (V4 or V3)
P5.6/R23	42	I/O	General-purpose digital I/O Input port of second most positive analog LCD level (V2)
P5.7/R33	43	I/O	General-purpose digital I/O Output port of most positive analog LCD level (V1)
P6.0/SIFCH0	59	I/O	General-purpose digital I/O Scan IF, channel 0 sensor excitation output and signal input
P6.1/SIFCH1	60	I/O	General-purpose digital I/O Scan IF, channel 1 sensor excitation output and signal input
P6.2/SIFCH2	61	I/O	General-purpose digital I/O Scan IF, channel 2 sensor excitation output and signal input

(2) LCD function selected automatically when applicable LCD module control bits are set, not with PxSEL bits.

Copyright © 2003–2013, Texas Instruments Incorporated

Table 1. Terminal Functions (continued)

TERMINAL		I/O	DESCRIPTION
NAME	NO.		
P6.3/SIFCH3/ SIFCAOUT	2	I/O	General-purpose digital I/O Scan IF, channel 3 sensor excitation output and signal input Scan IF comparator output
P6.4/SIFCI0	3	I/O	General-purpose digital I/O Scan IF, channel 0 signal input to comparator
P6.5/SIFCI1	4	I/O	General-purpose digital I/O Scan IF, channel 1 signal input to comparator
P6.6/SIFCI2/ SIFDACOUT	5	I/O	General-purpose digital I/O Scan IF, channel 2 signal input to comparator 10-bit DAC output
P6.7/SIFCI3/SVSIN	6	I/O	General-purpose digital I/O Scan IF, channel 3 signal input to comparator SVS, analog input
SIFCI	7	I	Scan IF input to Comparator.
SIFCOM	11	O	Common termination for Scan IF sensors.
RST/NMI	58	I	Reset input or nonmaskable interrupt input port.
TCK	57	I	Test clock. TCK is the clock input port for device programming and test.
TDI/TCLK	55	I	Test data input or test clock input. The device protection fuse is connected to TDI/TCLK.
TDO/TDI	54	I/O	Test data output port. TDO/TDI data output or programming data input terminal.
TMS	56	I	Test mode select. TMS is used as an input port for device programming and test.
XIN	8	I	Input port for crystal oscillator XT1. Standard or watch crystals can be connected.
XOUT	9	O	Output terminal of crystal oscillator XT1.

Copyright © 2003–2013, Texas Instruments Incorporated

Short-Form Description

CPU

The MSP430 CPU has a 16-bit RISC architecture that is highly transparent to the application. All operations, other than program-flow instructions, are performed as register operations in conjunction with seven addressing modes for source operand and four addressing modes for destination operand.

The CPU is integrated with 16 registers that provide reduced instruction execution time. The register-to-register operation execution time is one cycle of the CPU clock.

Four of the registers, R0 to R3, are dedicated as program counter, stack pointer, status register, and constant generator, respectively. The remaining registers are general-purpose registers.

Peripherals are connected to the CPU using data, address, and control buses, and can be handled with all instructions.

Instruction Set

The instruction set consists of the original 51 instructions with three formats and seven address modes. Each instruction can operate on word and byte data. Table 2 shows examples of the three types of instruction formats; Table 3 shows the address modes.

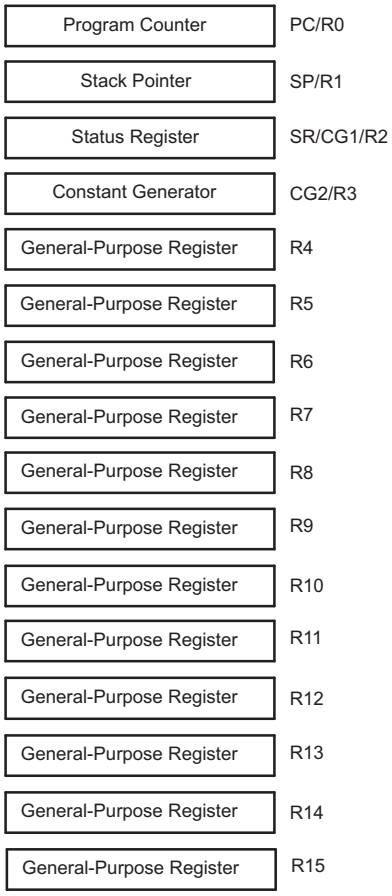

Table 2. Instruction Word Formats

INSTRUCTION FORMAT	EXAMPLE	OPERATION
Dual operands, source-destination	ADD R4,R5	R4 + R5 → R5
Single operands, destination only	CALL R8	PC→(TOS), R8 →PC
Relative jump, un/conditional	JNE	Jump-on-equal bit = 0

Table 3. Address Mode Descriptions

ADDRESS MODE	S(1)	D(1)	SYNTAX	EXAMPLE	OPERATION
Register	•	•	MOV Rs, Rd	MOV R10, R11	R10 → R11
Indexed	•	•	MOV X(Rn), Y(Rm)	MOV 2(R5), 6(R6)	M(2+R5)→ M(6+R6)
Symbolic (PC relative)	•	•	MOV EDE, TONI		M(EDE) → M(TONI)
Absolute	•	•	MOV & MEM, & TCDAT		M(MEM) → M(TCDAT)
Indirect	•		MOV @Rn, Y(Rm)	MOV @R10, Tab(R6)	M(R10) → M(Tab+R6)
Indirect autoincrement	•		MOV @Rn+, Rm	MOV @R10+, R11	M(R10) → R11 R10 + 2→ R10
Immediate	•		MOV #X, TONI	MOV #45, TONI	#45 → M(TONI)

(1) S = source D = destination

Copyright © 2003–2013, Texas Instruments Incorporated

Operating Modes

The MSP430 has one active mode and five software-selectable low-power modes of operation. An interrupt event can wake up the device from any of the five low-power modes, service the request, and restore back to the low-power mode on return from the interrupt program.

The following six operating modes can be configured by software:

- Active mode (AM)
  - All clocks are active
- Low-power mode 0 (LPM0)
  - CPU is disabled
  - ACLK and SMCLK remain active, MCLK is available to modules
  - FLL+ loop control remains active
- Low-power mode 1 (LPM1)
  - CPU is disabled
  - ACLK and SMCLK remain active, MCLK is available to modules
  - FLL+ loop control is disabled
- Low-power mode 2 (LPM2)
  - CPU is disabled
  - MCLK, FLL+ loop control, and DCOCLK are disabled
  - DCO's dc-generator remains enabled
  - ACLK remains active
- Low-power mode 3 (LPM3)
  - CPU is disabled
  - MCLK, FLL+ loop control, and DCOCLK are disabled
  - DCO's dc-generator is disabled
  - ACLK remains active
- Low-power mode 4 (LPM4)
  - CPU is disabled
  - ACLK is disabled
  - MCLK, FLL+ loop control, and DCOCLK are disabled
  - DCO's dc-generator is disabled
  - Crystal oscillator is stopped

Copyright © 2003–2013, Texas Instruments Incorporated

Interrupt Vector Addresses

The interrupt vectors and the power-up starting address are located in the address range 0FFFFh to 0FFE0h. The vector contains the 16-bit address of the appropriate interrupt-handler instruction sequence.

Table 4. Interrupt Sources, Flags, and Vectors

INTERRUPT SOURCE	INTERRUPT FLAG	SYSTEM INTERRUPT	WORD ADDRESS	PRIORITY
Power-up External Reset Watchdog Flash memory	WDTIFG KEYV (1)	Reset	0FFFEh	15, highest
NMI Oscillator Fault Flash memory access violation	NMIIFG OFIFG ACCVIFG (1) (2)	(Non)maskable (Non)maskable (Non)maskable	0FFFCh	14
Timer1_A5	TA1CCR0 CCIFG (3)	Maskable	0FFFAh	13
Timer1_A5	TA1CCR1 CCIFG to TA1CCR4 CCIFG, TA1CTL TAIFG (1) (3)	Maskable	0FFF8h	12
Comparator_A	CMPAIFG	Maskable	0FFF6h	11
Watchdog Timer	WDTIFG	Maskable	0FFF4h	10
Scan IF	SIFIFG0 to SIFIFG6 (1)	Maskable	0FFF2h	9
			0FFF0h	8
			0FFEEh	7
Timer0_A3	TA0CCR0 CCIFG (3)	Maskable	0FFECh	6
Timer0_A3	TA0CCR1 CCIFG, TA0CCR2 CCIFG, TA0CTL TAIFG (1) (2)	Maskable	0FFEAh	5
I/O port P1 (eight flags)	P1IFG.0 to P1IFG.7 (1) (2)	Maskable	0FFE8h	4
			0FFE6h	3
			0FFE4h	2
I/O port P2 (eight flags)	P2IFG.0 to P2IFG.7 (1) (2)	Maskable	0FFE2h	1
Basic Timer1	BTIFG	Maskable	0FFE0h	0, lowest

(1) Multiple source flags
(2) (Non)maskable: the individual interrupt-enable bit can disable an interrupt event, but the general interrupt-enable cannot.
(3) Interrupt flags are located in the module.

Copyright © 2003–2013, Texas Instruments Incorporated

Special Function Registers

Most interrupt and module-enable bits are collected in the lowest address space. Special-function register bits not allocated to a functional purpose are not physically present in the device. This arrangement provides simple software access.

Interrupt Enable 1 and 2

Address	7	6	5	4	3	2	1	0
00h			ACCVIE	NMIIE			OFIE	WDTIE
			rw-0	rw-0			rw-0	rw-0

	7	6	5	4	3	2	1	0
01h	BTIE							
	rw-0							

WDTIE:	Watchdog-timer interrupt enable. Inactive if watchdog mode is selected. Active if watchdog timer is configured in interval timer mode.
OFIE:	Oscillator-fault-interrupt enable
NMIIE:	Nonmaskable-interrupt enable
ACCVIE:	Flash access violation interrupt enable
BTIE:	Basic Timer1 interrupt enable

Interrupt Flag Register 1 and 2

Address	7	6	5	4	3	2	1	0
02h				NMIIFG			OFIFG	WDTIFG
				rw-0			rw-1	rw-(0)

	7	6	5	4	3	2	1	0
03h	BTIFG							
	rw-0							

WDTIFG:	Set on watchdog timer overflow (in watchdog mode) or security key violation. Reset on V_{CC} power up or a reset condition at the $\overline{RST}$/NMI pin in reset mode
OFIFG:	Flag set on oscillator fault
NMIIFG:	Set via $\overline{RST}$/NMI pin
BTIFG:	Basic Timer1 interrupt flag

Module Enable Registers 1 and 2

Address	7	6	5	4	3	2	1	0
04h/05h								

Legend	rw:	Bit can be Read and Written.
	rw-0,1:	Bit can be Read and Written. It is Reset or Set by PUC.
	rw-(0,1):	Bit can be Read and Written. It is Reset or Set by POR.
		SFR bit is not present in device

Copyright © 2003–2013, Texas Instruments Incorporated

Memory Organization

Table 5. Memory Organization

		MSP430FW423	MSP430FW425	MSP430FW427	MSP430FW428	MSP430FW429
Memory	Size	8KB	16KB	32KB	48KB	60KB
Interrupt vector	Flash	0FFFFh-0FFE0h	0FFFFh-0FFE0h	0FFFFh-0FFE0h	0FFFFh-0FFE0h	0FFFFh-0FFE0h
Code memory	Flash	0FFFFh - 0E000h	0FFFFh-0C000h	0FFFFh-08000h	0FFFFh-04000h	0FFFFh-01100h
Information memory	Size	256 Byte 010FFh-01000h	256 Byte 010FFh-01000h	256 Byte 010FFh-01000h	256 Byte 010FFh-01000h	256 Byte 010FFh-01000h
Boot memory	Size	1KB 0FFFh-0C00h	1KB 0FFFh-0C00h	1KB 0FFFh-0C00h	1KB 0FFFh-0C00h	1KB 0FFFh-0C00h
RAM	Size	256 Byte 02FFh-0200h	512 Byte 03FFh-0200h	1KB 05FFh-0200h	2KB 09FFh-0200h	2KB 09FFh-0200h
Peripherals	16-bit 8-bit 8-bit SFR	01FFh-0100h 0FFh-010h 0Fh-00h	01FFh - 0100h 0FFh-010h 0Fh-00h	01FFh-0100h 0FFh-010h 0Fh - 00h	01FFh-0100h 0FFh-010h 0Fh-00h	01FFh-0100h 0FFh-010h 0Fh-00h

Bootstrap Loader (BSL)

The MSP430 bootstrap loader (BSL) enables users to program the flash memory or RAM using a UART serial interface. Access to the MSP430 memory via the BSL is protected by user-defined password. For complete description of the features of the BSL and its implementation, see the *MSP430 Programming Via the Bootstrap Loader User's Guide* (SLAU319).

BSL FUNCTION	PM PACKAGE PINS
Data Transmit	53 - P1.0
Data Receiver	52 - P1.1

Flash Memory

The flash memory can be programmed via the JTAG port, the bootstrap loader, or in system by the CPU. The CPU can perform single-byte and single-word writes to the flash memory. Features of the flash memory include:

- Flash memory has n segments of main memory and two segments of information memory (A and B) of 128 bytes each. Each segment in main memory is 512 bytes in size.
- Segments 0 to n may be erased in one step, or each segment may be individually erased.
- Segments A and B can be erased individually, or as a group with segments 0 to n. Segments A and B are also called *information memory*.
- New devices may have some bytes programmed in the information memory (needed for test during manufacturing). The user should perform an erase of the information memory prior to the first use.

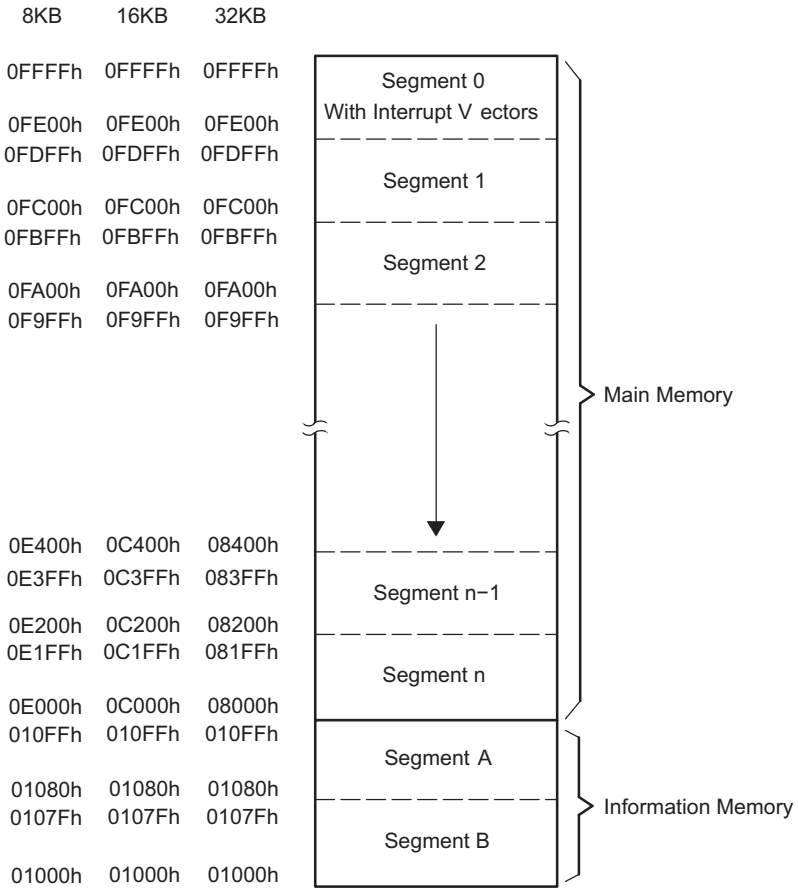

Copyright © 2003–2013, Texas Instruments Incorporated

Peripherals

Peripherals are connected to the CPU through data, address, and control buses and can be handled using all instructions. For complete module descriptions, refer to the *MSP430x4xx Family User's Guide* (SLAU056).

Oscillator and System Clock

The clock system is supported by the FLL+ module that includes support for a 32768-Hz watch crystal oscillator, an internal digitally controlled oscillator (DCO), and a high-frequency crystal oscillator. The FLL+ clock module is designed to meet the requirements of both low system cost and low power consumption. The FLL+ features digital frequency locked loop (FLL) hardware that, in conjunction with a digital modulator, stabilizes the DCO frequency to a programmable multiple of the watch crystal frequency. The internal DCO provides a fast turn-on clock source and stabilizes in less than 6 µs. The FLL+ module provides the following clock signals:

- Auxiliary clock (ACLK), sourced from a 32768-Hz watch crystal or a high frequency crystal.
- Main clock (MCLK), the system clock used by the CPU.
- Sub-Main clock (SMCLK), the subsystem clock used by the peripheral modules.
- ACLK/n, the buffered output of ACLK, ACLK/2, ACLK/4, or ACLK/8.

Brownout, Supply Voltage Supervisor (SVS)

The brownout circuit is implemented to provide the proper internal reset signal to the device during power-on and power-off. The SVS circuitry detects if the supply voltage drops below a user-selectable level and supports both supply voltage supervision (the device is automatically reset) and supply voltage monitoring (the device is not automatically reset).

The CPU begins code execution after the brownout circuit releases the device reset. However, V_{CC} may not have ramped to $V_{CC(min)}$ at that time. The user must insure the default FLL+ settings are not changed until V_{CC} reaches $V_{CC(min)}$. If desired, the SVS circuit can be used to determine when V_{CC} reaches $V_{CC(min)}$.

Digital I/O

There are six 8-bit I/O ports implemented—ports P1 through P6:

- All individual I/O bits are independently programmable.
- Any combination of input, output, and interrupt conditions is possible.
- Edge-selectable interrupt input capability for all the eight bits of ports P1 and P2.
- Read/write access to port-control registers is supported by all instructions.

Basic Timer1

The Basic Timer1 has two independent 8-bit timers that can be cascaded to form a 16-bit timer/counter. Both timers can be read and written by software. The Basic Timer1 can be used to generate periodic interrupts and clock for the LCD module.

LCD Drive

The LCD driver generates the segment and common signals required to drive an LCD display. The LCD controller has dedicated data memory to hold segment drive information. Common and segment signals are generated as defined by the mode. Static, 2-MUX, 3-MUX, and 4-MUX LCDs are supported by this peripheral.

Watchdog Timer (WDT)

The primary function of the WDT module is to perform a controlled system restart after a software problem occurs. If the selected time interval expires, a system reset is generated. If the watchdog function is not needed in an application, the module can be configured as an interval timer and can generate interrupts at selected time intervals.

Comparator_A

The primary function of the Comparator_A module is to support precision slope analog-to-digital conversions, battery-voltage supervision, and monitoring of external analog signals.

Copyright © 2003–2013, Texas Instruments Incorporated

Scan Interface

The scan interface is used to measure linear or rotational motion and supports LC and resistive sensors such as GMR sensors. The scan IF incorporates a $V_{CC}/2$ generator, a comparator, and a 10-bit DAC and supports up to four sensors.

Timer0_A3

Timer0_A3 is a 16-bit timer/counter with three capture/compare registers. Timer_A3 can support multiple capture/compares, PWM outputs, and interval timing. Timer0_A3 also has extensive interrupt capabilities. Interrupts may be generated from the counter on overflow conditions and from each of the capture/compare registers.

Table 6. Timer0_A3 Signal Connections

INPUT PIN NUMBER	DEVICE INPUT SIGNAL	MODULE INPUT NAME	MODULE BLOCK	MODULE OUTPUT SIGNAL	OUTPUT PIN NUMBER
48 - P1.5	TA0CLK	TACLK	Timer	NA	
	ACLK	ACLK			
	SMCLK	SMCLK			
48 - P1.5	TA0CLK	INCLK			
53 - P1.0	TA0.0	CCI0A	CCR0	TA0.0	53 - P1.0
52 - P1.1	TA0.0	CCI0B			
	DV_{SS}	GND			
	DV_{CC}	V_{CC}			
51 - P1.2	TA0.1	CCI1A	CCR1	TA0.1	51 - P1.2
	CAOUT (internal)	CCI1B			
	DV_{SS}	GND			
	DV_{CC}	V_{CC}			
45 - P2.0	TA0.2	CCI2A	CCR2	TA0.2	45 - P2.0
	ACLK (internal)	CCI2B			
	DV_{SS}	GND			
	DV_{CC}	V_{CC}			

Copyright © 2003–2013, Texas Instruments Incorporated

Timer1_A5

Timer1_A5 is a 16-bit timer/counter with five capture/compare registers. Timer1_A5 can support multiple capture/compares, PWM outputs, and interval timing. Timer1_A5 also has extensive interrupt capabilities. Interrupts may be generated from the counter on overflow conditions and from each of the capture/compare registers.

Table 7. Timer1_A5 Signal Connections

INPUT PIN NUMBER	DEVICE INPUT SIGNAL	MODULE INPUT NAME	MODULE BLOCK	MODULE OUTPUT SIGNAL	OUTPUT PIN NUMBER
32 - P2.5	TA1CLK	TACLK	Timer	NA	
	ACLK	ACLK			
	SMCLK	SMCLK			
32 - P2.5	TA1CLK	INCLK			
49 - P1.4	TA1.0	CCI0A	CCR0	TA1.0	49 - P1.4
50 - P1.3	TA1.0	CCI0B			
	DV_{SS}	GND			
	DV_{CC}	V_{CC}			
44 - P2.1	TA1.1	CCI1A	CCR1	TA1.1	44 - P2.1
	CAOUT (internal)	CCI1B			
	DV_{SS}	GND			
	DV_{CC}	V_{CC}			
35 - P2.2	TA1.2	CCI2A	CCR2	TA1.2	35 - P2.2
	SIFO0sig (internal)	CCI2B			
	DV_{SS}	GND			
	DV_{CC}	V_{CC}			
34 - P2.3	TA1.3	CCI3A	CCR3	TA1.3	34 - P2.3
	SIFO1sig (internal)	CCI3B			
	DV_{SS}	GND			
	DV_{CC}	V_{CC}			
33 - P2.4	TA1.4	CCI4A	CCR4	TA1.4	33 - P2.4
	SIFO2sig (internal)	CCI4B			
	DV_{SS}	GND			
	DV_{CC}	V_{CC}			

Copyright © 2003–2013, Texas Instruments Incorporated

Peripheral File Map

Table 8. Peripherals With Word Access

MODULE	REGISTER NAME	ACRONYM	ADDRESS
Watchdog	Watchdog Timer control	WDTCTL	0120h
Timer1_A5	Timer1_A interrupt vector	TA1IV	011Eh
	Timer1_A control	TA1CTL	0180h
	Capture/compare control 0	TA1CCTL0	0182h
	Capture/compare control 1	TA1CCTL1	0184h
	Capture/compare control 2	TA1CCTL2	0186h
	Capture/compare control 3	TA1CCTL3	0188h
	Capture/compare control 4	TA1CCTL4	018Ah
	Reserved		018Ch
	Reserved		018Eh
	Timer1_A register	TA1R	0190h
	Capture/compare register 0	TA1CCR0	0192h
	Capture/compare register 1	TA1CCR1	0194h
	Capture/compare register 2	TA1CCR2	0196h
	Capture/compare register 3	TA1CCR3	0198h
	Capture/compare register 4	TA1CCR4	019Ah
	Reserved		019Ch
	Reserved		019Eh
Timer0_A3	Timer0_A interrupt vector	TA0IV	012Eh
	Timer0_A control	TA0CTL0	0160h
	Capture/compare control 0	TA0CCTL0	0162h
	Capture/compare control 1	TA0CCTL1	0164h
	Capture/compare control 2	TA0CCTL2	0166h
	Reserved		0168h
	Reserved		016Ah
	Reserved		016Ch
	Reserved		016Eh
	Timer0_A register	TA0R	0170h
	Capture/compare register 0	TA0CCR0	0172h
	Capture/compare register 1	TA0CCR1	0174h
	Capture/compare register 2	TA0CCR2	0176h
	Reserved		0178h
	Reserved		017Ah
	Reserved		017Ch
	Reserved		017Eh
Flash	Flash control 3	FCTL3	012Ch
	Flash control 2	FCTL2	012Ah
	Flash control 1	FCTL1	0128h

Copyright © 2003–2013, Texas Instruments Incorporated

Table 8. Peripherals With Word Access (continued)

MODULE	REGISTER NAME	ACRONYM	ADDRESS
Scan IF	SIF timing state machine 23	SIFTSM23	01FEh
	⋮	⋮	⋮
	SIF timing state machine 0	SIFTSM0	01D0h
	SIF DAC register 7	SIFDACR7	01CEh
	⋮	⋮	⋮
	SIF DAC register 0	SIFDACR0	01C0h
	SIF control register 5	SIFCTL5	01BEh
	SIF control register 4	SIFCTL4	01BCh
	SIF control register 3	SIFCTL3	01BAh
	SIF control register 2	SIFCTL2	01B8h
	SIF control register 1	SIFCTL1	01B6h
	SIF processing state machine vector	SIFPSMV	01B4h
	SIF counter CNT1/2	SIFCNT	01B2h
	Reserved	SIFDEBUG	01B0h

Table 9. Peripherals With Byte Access

MODULE	REGISTER NAME	ACRONYM	ADDRESS
LCD	LCD memory 20	LCDM20	0A4h
	⋮	⋮	⋮
	LCD memory 16	LCDM16	0A0h
	LCD memory 15	LCDM15	09Fh
	⋮	⋮	⋮
	LCD memory 1	LCDM1	091h
	LCD control and mode	LCDCTL	090h
Comparator_A	Comparator_A port disable	CAPD	05Bh
	Comparator_A control 2	CACTL2	05Ah
	Comparator_A control 1	CACTL1	059h
Brownout, SVS	SVS control register	SVSCTL	056h
FLL+ Clock	FLL+ Control 1	FLL_CTL1	054h
	FLL+ Control 0	FLL_CTL0	053h
	System clock frequency control	SCFQCTL	052h
	System clock frequency integrator	SCFI1	051h
	System clock frequency integrator	SCFI0	050h
Basic Timer1	BT counter 2	BTCNT2	047h
	BT counter 1	BTCNT1	046h
	BT control	BTCTL	040h
Port P6	Port P6 selection	P6SEL	037h
	Port P6 direction	P6DIR	036h
	Port P6 output	P6OUT	035h
	Port P6 input	P6IN	034h
Port P5	Port P5 selection	P5SEL	033h
	Port P5 direction	P5DIR	032h
	Port P5 output	P5OUT	031h
	Port P5 input	P5IN	030h

Copyright © 2003–2013, Texas Instruments Incorporated

Table 9. Peripherals With Byte Access (continued)

MODULE	REGISTER NAME	ACRONYM	ADDRESS
Port P4	Port P4 selection	P4SEL	01Fh
	Port P4 direction	P4DIR	01Eh
	Port P4 output	P4OUT	01Dh
	Port P4 input	P4IN	01Ch
Port P3	Port P3 selection	P3SEL	01Bh
	Port P3 direction	P3DIR	01Ah
	Port P3 output	P3OUT	019h
	Port P3 input	P3IN	018h
Port P2	Port P2 selection	P2SEL	02Eh
	Port P2 interrupt enable	P2IE	02Dh
	Port P2 interrupt-edge select	P2IES	02Ch
	Port P2 interrupt flag	P2IFG	02Bh
	Port P2 direction	P2DIR	02Ah
	Port P2 output	P2OUT	029h
	Port P2 input	P2IN	028h
Port P1	Port P1 selection	P1SEL	026h
	Port P1 interrupt enable	P1IE	025h
	Port P1 interrupt-edge select	P1IES	024h
	Port P1 interrupt flag	P1IFG	023h
	Port P1 direction	P1DIR	022h
	Port P1 output	P1OUT	021h
	Port P1 input	P1IN	020h
Special Functions	SFR module enable 2	ME2	005h
	SFR module enable 1	ME1	004h
	SFR interrupt flag 2	IFG2	003h
	SFR interrupt flag 1	IFG1	002h
	SFR interrupt enable 2	IE2	001h
	SFR interrupt enable 1	IE1	000h

Copyright © 2003–2013, Texas Instruments Incorporated

Absolute Maximum Ratings[1]

over operating free-air temperature range (unless otherwise noted)

Voltage applied at V_{CC} to V_{SS}		-0.3 V to 4.1 V
Voltage applied to any pin[2]		-0.3 V to V_{CC} + 0.3 V
Diode current at any device terminal		±2 mA
Storage temperature range, T_{stg}	Unprogrammed device	-55°C to 150°C
	Programmed device	-40°C to 85°C

(1) Stresses beyond those listed under "absolute maximum ratings" may cause permanent damage to the device. These are stress ratings only, and functional operation of the device at these or any other conditions beyond those indicated under "recommended operating conditions" is not implied. Exposure to absolute-maximum-rated conditions for extended periods may affect device reliability.
(2) All voltages referenced to V_{SS}.The JTAG fuse-blow voltage, V_{FB}, is allowed to exceed the absolute maximum rating. The voltage is applied to the TDI/TCLK pin when blowing the JTAG fuse.

Recommended Operating Conditions

Typical values are specified at V_{CC} = 3.3 V and T_A = 25°C (unless otherwise noted)

				MIN	NOM	MAX	UNIT
V_{CC}	Supply voltage during program execution[1] ($AV_{CC} = DV_{CC1} = DV_{CC2} = V_{CC}$)			1.8		3.6	V
V_{CC}	Supply voltage during program execution, SVS enabled, PORON = 1[1] [2] ($AV_{CC} = DV_{CC1} = DV_{CC2} = V_{CC}$)			2		3.6	V
V_{CC}	Supply voltage during flash memory programming[1] ($AV_{CC} = DV_{CC1} = DV_{CC2} = V_{CC}$)			2.7		3.6	V
V_{SS}	Supply voltage ($AV_{SS} = DV_{SS1} = DV_{SS2} = V_{SS}$)			0		0	V
T_A	Operating free-air temperature range			-40		85	°C
$f_{(LFXT1)}$	LFXT1 crystal frequency[3]	LF selected, XTS_FLL = 0	Watch crystal		32.768		kHz
		XT1 selected, XTS_FLL = 1	Ceramic resonator	450		8000	
		XT1 selected, XTS_FLL = 1	Crystal	1000		8000	
$f_{(System)}$	Processor frequency (signal MCLK)	V_{CC} = 1.8 V		DC		4.15	MHz
		V_{CC} = 3.6 V		DC		8	

(1) It is recommended to power AV_{CC} and DV_{CC} from the same source. A maximum difference of 0.3 V between AV_{CC} and DV_{CC} can be tolerated during power up and operation.
(2) The minimum operating supply voltage is defined according to the trip point where POR is going active by decreasing the supply voltage. POR is going inactive when the supply voltage is raised above the minimum supply voltage plus the hysteresis of the SVS circuitry.
(3) In LF mode, the LFXT1 oscillator requires a watch crystal. In XT1 mode, LFXT1 accepts a ceramic resonator or a crystal.

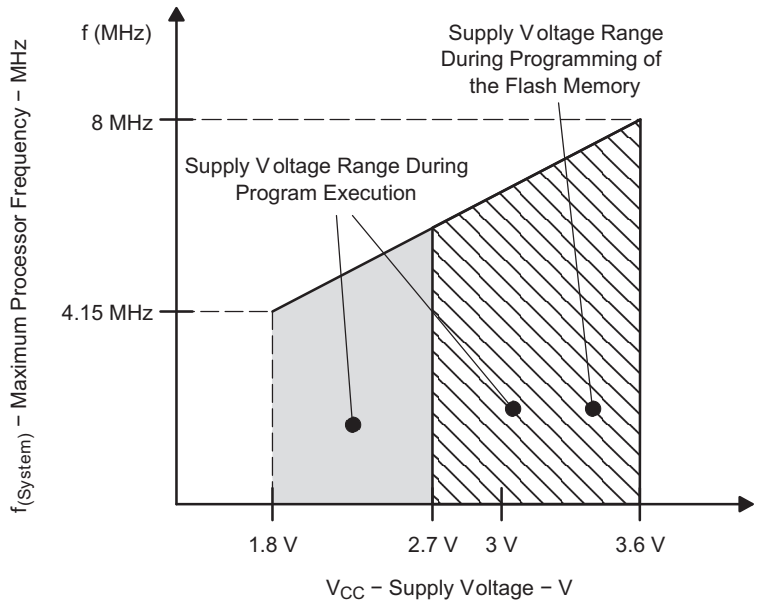

Figure 1. Maximum Frequency vs Supply Voltage

Electrical Characteristics

Supply Current Into AV_{CC} + DV_{CC} Excluding External Current (FW423, FW425, FW427)[1]

over recommended operating free-air temperature range (unless otherwise noted)

PARAMETER		T_A	V_{CC}	MIN	TYP	MAX	UNIT
$I_{(AM)}$	Active mode (AM) $f_{(MCLK)} = f_{(SMCLK)} = f_{(DCO)}$ = 1 MHz, $f_{(ACLK)}$ = 32768 Hz, XTS_FLL = 0	-40°C to 85°C	2.2 V		200	250	µA
			3 V		300	350	
$I_{(LPM0)}$	Low-power mode 0 (LPM0)[2] $f_{(MCLK)} = f_{(SMCLK)} = f_{(DCO)}$ = 1 MHz, $f_{(ACLK)}$ = 32768 Hz, XTS_FLL = 0, FN_8 = FN_4 = FN_3 = FN_2 = 0	-40°C to 85°C	2.2 V		57	70	µA
			3 V		92	100	
$I_{(LPM2)}$	Low-power mode 2 (LPM2)[2]	-40°C to 85°C	2.2 V		11	14	µA
			3 V		17	22	
$I_{(LPM3)}$	Low-power mode 3 (LPM3)[3][2]	-40°C	2.2 V		0.95	1.4	µA
		-10°C			0.8	1.3	
		25°C			0.7	1.2	
		60°C			0.95	1.4	
		85°C			1.6	2.3	
		-40°C	3 V		1.1	1.7	
		-10°C			1	1.6	
		25°C			0.9	1.5	
		60°C			1.1	1.7	
		85°C			2	2.6	
$I_{(LPM4)}$	Low-power mode (LPM4)[2]	-40°C	2.2 V, 3 V		0.1	0.5	µA
		25°C			0.1	0.5	
		85°C			0.8	2.5	

(1) All inputs are tied to 0 V or V_{CC}. Outputs do not source or sink any current. The current consumption is measured with active Basic Timer1 and LCD (ACLK selected). The current consumption of the Comparator_A and the SVS module are specified in the respective sections.
(2) Current consumption for brownout included.
(3) The LPM3 currents are characterized with a KDS Daishinku DT−38 (6 pF) crystal.

Copyright © 2003–2013, Texas Instruments Incorporated

Supply Current Into AV_{CC} + DV_{CC} Excluding External Current (FW428, FW429)(1)

over recommended operating free-air temperature range (unless otherwise noted)

PARAMETER		T_A	V_{CC}	MIN	TYP	MAX	UNIT
$I_{(AM)}$	Active mode (AM) $f_{(MCLK)} = f_{(SMCLK)} = f_{(DCO)}$ = 1 MHz, $f_{(ACLK)}$ = 32768 Hz, XTS_FLL = 0	-40°C to 85°C	2.2 V		210	290	µA
			3 V		320	390	
$I_{(LPM0)}$	Low-power mode 0 (LPM0)(2) $f_{(MCLK)} = f_{(SMCLK)} = f_{(DCO)}$ = 1 MHz, $f_{(ACLK)}$ = 32768 Hz, XTS_FLL = 0, FN_8 = FN_4 = FN_3 = FN_2 = 0	-40°C to 85°C	2.2 V		60	75	µA
			3 V		95	110	
$I_{(LPM2)}$	Low-power mode 2 (LPM2)(2)	-40°C to 85°C	2.2 V		11	14	µA
			3 V		17	22	
$I_{(LPM3)}$	Low-power mode 3 (LPM3)(3)(2)	-40°C	2.2 V		0.95	1.4	µA
		-10°C			0.8	1.3	
		25°C			0.7	1.5	
		60°C			1.0	1.9	
		85°C			1.7	2.9	
		-40°C	3 V		1.1	1.7	µA
		-10°C			1.0	1.6	
		25°C			0.9	1.85	
		60°C			1.3	2.6	
		85°C			2.1	3.9	
$I_{(LPM4)}$	Low-power mode (LPM4)(2)	-40°C	2.2 V, 3 V		0.1	0.5	µA
		25°C			0.15	0.5	
		85°C			1.3	2.5	

(1) All inputs are tied to 0 V or V_{CC}. Outputs do not source or sink any current. The current consumption is measured with active Basic Timer1 and LCD (ACLK selected). The current consumption of the Comparator_A and the SVS module are specified in the respective sections.
(2) Current consumption for brownout included.
(3) The LPM3 currents are characterized with a KDS Daishinku DT−38 (6 pF) crystal.

Current consumption of active mode versus system frequency

$I_{(AM)} = I_{(AM)\ [1\ MHz]} \times f_{(System)\ [MHz]}$

Current consumption of active mode versus supply voltage

$I_{(AM)} = I_{(AM)\ [3\ V]} + 140\ \mu A/V \times (V_{CC} - 3\ V)$

Schmitt-Trigger Inputs − Ports (P1, P2, P3, P4, P5, P6), $\overline{RST}$/NMI, JTAG (TCK, TMS, TDI/TCLK)

over recommended operating free-air temperature range (unless otherwise noted)

PARAMETER		TEST CONDITIONS	MIN	TYP	MAX	UNIT
V_{IT+}	Positive-going input threshold voltage	V_{CC} = 2.2 V	1.1		1.5	V
		V_{CC} = 3 V	1.5		1.9	
V_{IT-}	Negative-going input threshold voltage	V_{CC} = 2.2 V	0.4		0.9	V
		V_{CC} = 3 V	0.9		1.3	
V_{hys}	Input voltage hysteresis (V_{IT+} - V_{IT-})	V_{CC} = 2.2 V	0.3		1.1	V
		V_{CC} = 3 V	0.45		1	

Inputs Px.x, TAx.x

PARAMETER		TEST CONDITIONS	V_{CC}	MIN	TYP	MAX	UNIT
$t_{(int)}$	External interrupt timing	Port P1, P2: P1.x to P2.x, external trigger signal for the interrupt flag (1)	2.2 V, 3 V	1.5			cycle
			2.2 V	62			ns
			3 V	50			
$t_{(cap)}$	Timer_A capture timing	TAx x	2.2 V	62			ns
			3 V	50			
$f_{(TAext)}$	Timer_A clock frequency externally applied to pin	TAxCLK, INCLK $t_{(H)} = t_{(L)}$	2.2 V			8	MHz
			3 V			10	
$f_{(TAint)}$	Timer_A clock frequency	SMCLK or ACLK signal selected	2.2 V			8	MHz
			3 V			10	

(1) The external signal sets the interrupt flag every time the minimum $t_{(int)}$ parameters are met. It may be set even with trigger signals shorter than $t_{(int)}$. Both the cycle and timing specifications must be met to ensure the flag is set. $t_{(int)}$ is measured in MCLK cycles.

Leakage Current − Ports (P1, P2, P3, P4, P5, P6)(1)

PARAMETER			TEST CONDITIONS		MIN	TYP	MAX	UNIT
$I_{lkg(Px.x)}$	Leakage current	Port P1.x	Port x: $V_{(Px.x)}$ (2),	V_{CC} = 2.2 V, 3 V			±50	nA

(1) The leakage current is measured with V_{SS} or V_{CC} applied to the corresponding pins, unless otherwise noted.
(2) The port pin must be selected as input.

Copyright © 2003–2013, Texas Instruments Incorporated

Outputs − Ports (P1, P2, P3, P4, P5, P6)

over recommended operating free-air temperature range (unless otherwise noted)

PARAMETER		TEST CONDITIONS		MIN	TYP	MAX	UNIT
V_{OH}	High-level output voltage	$I_{OH(max)}$ = -1.5 mA,	V_{CC} = 2.2 V(1)	V_{CC} - 0.25		V_{CC}	V
		$I_{OH(max)}$ = -6 mA,	V_{CC} = 2.2 V(2)	V_{CC} - 0.6		V_{CC}	
		$I_{OH(max)}$ = -1.5 mA,	V_{CC} = 3 V(1)	V_{CC} - 0.25		V_{CC}	
		$I_{OH(max)}$ = -6 mA,	V_{CC} = 3 V(2)	V_{CC} - 0.6		V_{CC}	
V_{OL}	Low-level output voltage	$I_{OL(max)}$ = 1.5 mA,	V_{CC} = 2.2 V(1)	V_{SS}		V_{SS} + 0.25	V
		$I_{OL(max)}$ = 6 mA,	V_{CC} = 2.2 V(2)	V_{SS}		V_{SS} + 0.6	
		$I_{OL(max)}$ = 1.5 mA,	V_{CC} = 3 V(1)	V_{SS}		V_{SS} + 0.25	
		$I_{OL(max)}$ = 6 mA,	V_{CC} = 3 V(2)	V_{SS}		V_{SS} + 0.6	

(1) The maximum total current, $I_{OH(max)}$ and $I_{OL(max)}$, for all outputs combined, should not exceed ±12 mA to satisfy the maximum specified voltage drop.
(2) The maximum total current, $I_{OH(max)}$ and $I_{OL(max)}$, for all outputs combined, should not exceed ±48 mA to satisfy the maximum specified voltage drop.

Output Frequency

over recommended operating free-air temperature range (unless otherwise noted)

PARAMETER		TEST CONDITIONS		MIN	TYP	MAX	UNIT
$f_{(Px.y)}$	(1 ≤ × ≤ 6, 0 ≤ y ≤ 7)	C_L = 20 F, I_L = ±1.5 mA	V_{CC} = 2.2 V	dc		10	MHz
			V_{CC} = 3 V	dc		12	
$f_{(ACLK)}$ $f_{(MCLK)}$ $f_{(SMCLK)}$	P1.1/TA0.0/MCLK, P1.5/TA0CLK/ACLK	C_L = 20 pF	V_{CC} = 2.2 V			8	MHz
			V_{CC} = 3 V			12	
$t_{(Xdc)}$	Duty cycle of output frequency	P1.5/TA0CLK/ACLK , C_L = 20 pF V_{CC} = 2.2 V, 3 V	$f_{ACLK} = f_{LFXT1} = f_{XT1}$	40%		60%	
			$f_{ACLK} = f_{LFXT1} = f_{LF}$	30%		70%	
			$f_{ACLK} = f_{LFXT1/n}$		50%		
		P1.1/TA0.0/MCLK, C_L = 20 pF V_{CC} = 2.2 V, 3 V	$f_{MCLK} = f_{LFXT1/n}$	50% - 15 ns	50%	50%+ 15 ns	
			$f_{MCLK} = f_{DCOCLK}$	50% - 15 ns	50%	50%+ 15 ns	

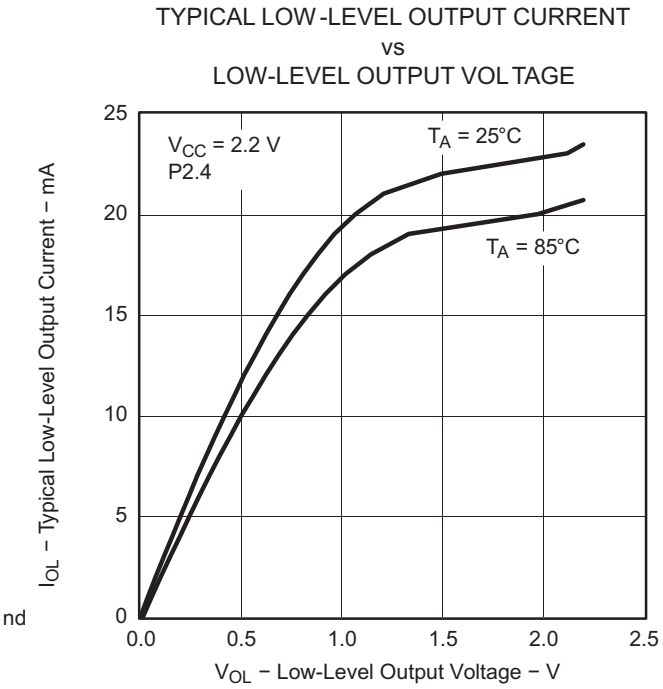

Figure 2.

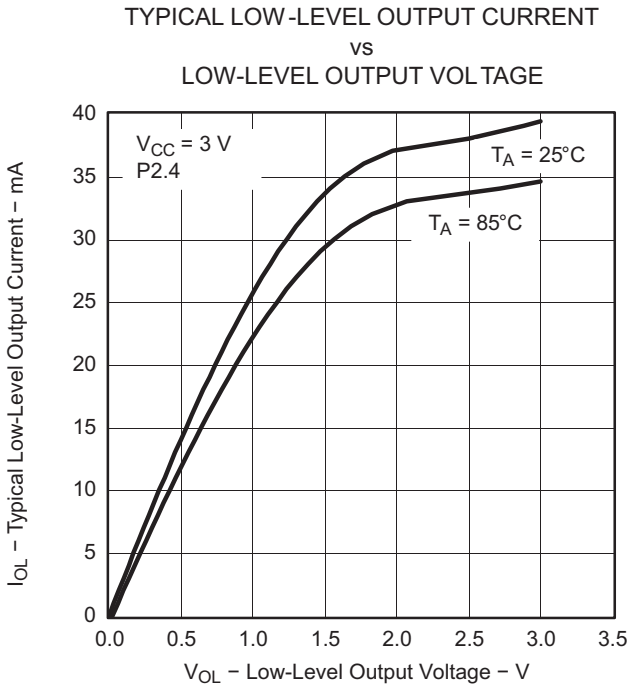

Figure 3.

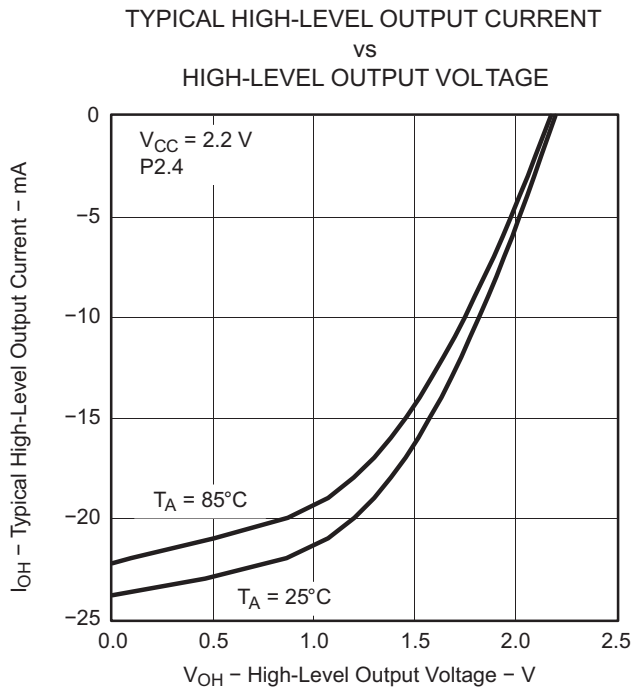

Figure 4.

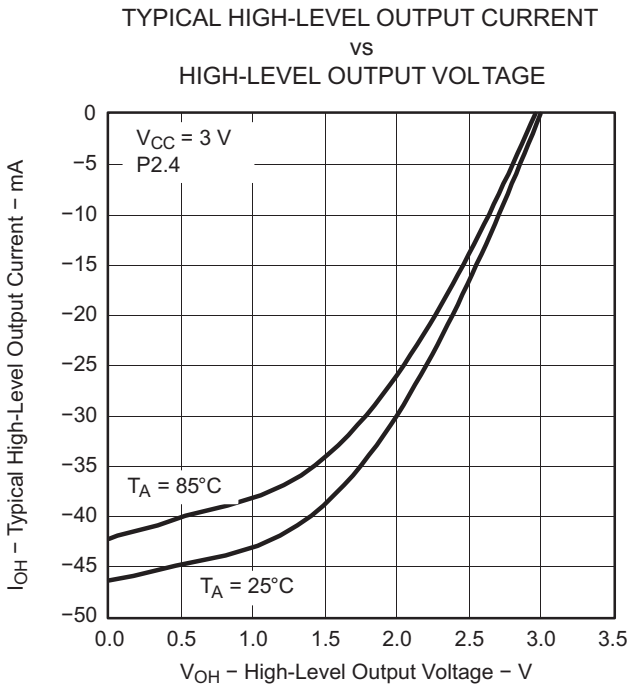

Figure 5.

Copyright © 2003–2013, Texas Instruments Incorporated

Wake-UP LPM3

over recommended operating free-air temperature range (unless otherwise noted)

PARAMETER		TEST CONDITIONS		MIN	TYP	MAX	UNIT
$t_{d(LPM3)}$	Delay time	f = 1 MHz	V_{CC} = 2.2 V, 3 V			6	µs
		f = 2 MHz				6	
		f = 3 MHz				6	

RAM

over recommended operating free-air temperature range (unless otherwise noted)

PARAMETER	TEST CONDITIONS	MIN	TYP	MAX	UNIT
V_{RAMh}	CPU halted (1)	1.6			V

(1) This parameter defines the minimum supply voltage when the data in program memory RAM remain unchanged. No program execution should take place during this supply voltage condition.

LCD

over recommended operating free-air temperature range (unless otherwise noted)

PARAMETER		TEST CONDITIONS		MIN	TYP	MAX	UNIT
$V_{(33)}$	Analog voltage	Voltage at P5.7/R33	V_{CC} = 3 V	2.5		V_{CC} + 0.2	V
$V_{(23)}$		Voltage at P5.6/R23			$[V_{(33)} - V_{(03)}] \times 2/3 + V_{(03)}$		
$V_{(13)}$		Voltage at P5.5/R13			$[V_{(33)} - V_{(03)}] \times 1/3 + V_{(03)}$		
$V_{(33)} - V_{(03)}$		Voltage at R33 to R03		2.5		V_{CC} + 0.2	
$I_{(R03)}$	Input leakage	R03 = V_{SS}	No load at all segment and common lines, V_{CC} = 3 V			±20	nA
$I_{(R13)}$		P5.5/R13 = $V_{CC}/3$				±20	
$I_{(R23)}$		P5.6/R23 = 2 × $V_{CC}/3$				±20	
$V_{(Sxx0)}$	Segment line voltage	$I_{(Sxx)}$ = -3 µA,	V_{CC} = 3 V	$V_{(03)}$		$V_{(03)}$ - 0.1	V
$V_{(Sxx1)}$				$V_{(13)}$		$V_{(13)}$ - 0.1	
$V_{(Sxx2)}$				$V_{(23)}$		$V_{(23)}$ - 0.1	
$V_{(Sxx3)}$				$V_{(33)}$		$V_{(33)}$ + 0.1	

Comparator_A (1)

over recommended operating free-air temperature range (unless otherwise noted)

PARAMETER		TEST CONDITIONS	V_{CC}	MIN	TYP	MAX	UNIT
$I_{(CC)}$		CAON = 1, CARSEL = 0, CAREF = 0	2.2 V		25	40	µA
			3 V		45	60	
$I_{(Refladder/RefDiode)}$		CAON = 1, CARSEL = 0, CAREF = 1/2/3, No load at P1.6/CA0 and P1.7/CA1	2.2 V		30	50	µA
			3 V		45	71	
$V_{(Ref025)}$	$\frac{\text{Voltage @ 0.25 } V_{cc} \text{ node}}{V_{cc}}$	PCA0 = 1, CARSEL = 1, CAREF = 1, No load at P1.6/CA0 and P1.7/CA1	2.2 V, 3 V	0.23	0.24	0.25	
$V_{(Ref050)}$	$\frac{\text{Voltage @ 0.5 } V_{cc} \text{ node}}{V_{cc}}$	PCA0 = 1, CARSEL = 1, CAREF = 2, No load at P1.6/CA0 and P1.7/CA1	2.2 V, 3 V	0.47	0.48	0.5	
$V_{(RefVT)}$	See Figure 6, Figure 7	PCA0 = 1, CARSEL = 1, CAREF = 3, No load at P1 6/CA0 and P1 7/CA1, T_A = 85°C	2.2 V	390	480	540	mV
			3 V	400	490	550	
V_{IC}	Common-mode input voltage range	CAON = 1	2.2 V, 3 V	0		V_{CC} - 1	V
$V_p – V_S$	Offset voltage	(2)	2.2 V, 3 V	-30		30	mV
V_{hys}	Input hysteresis	CAON = 1	2.2 V, 3 V	0	0.7	1.4	mV
$t_{(response\ LH)}$		T_A = 25°C Overdrive 10 mV, without filter: CAF = 0	2.2 V	130	210	300	ns
			3 V	80	150	240	
		T_A = 25°C Overdrive 10 mV, with filter: CAF = 1	2.2 V	1.4	1.9	3.4	µs
			3 V	0.9	1.5	2.6	
$t_{(response\ HL)}$		T_A = 25°C Overdrive 10 mV, without filter: CAF = 0	2.2 V	130	210	300	ns
			3 V	80	150	240	
		T_A = 25°C Overdrive 10 mV, with filter: CAF = 1	2.2 V	1.4	1.9	3.4	µs
			3 V	0.9	1.5	2.6	

(1) The leakage current for the Comparator_A terminals is identical to $I_{lkg(Px.x)}$ specification.
(2) The input offset voltage can be cancelled by using the CAEX bit to invert the Comparator_A inputs on successive measurements. The two successive measurements are then summed together.

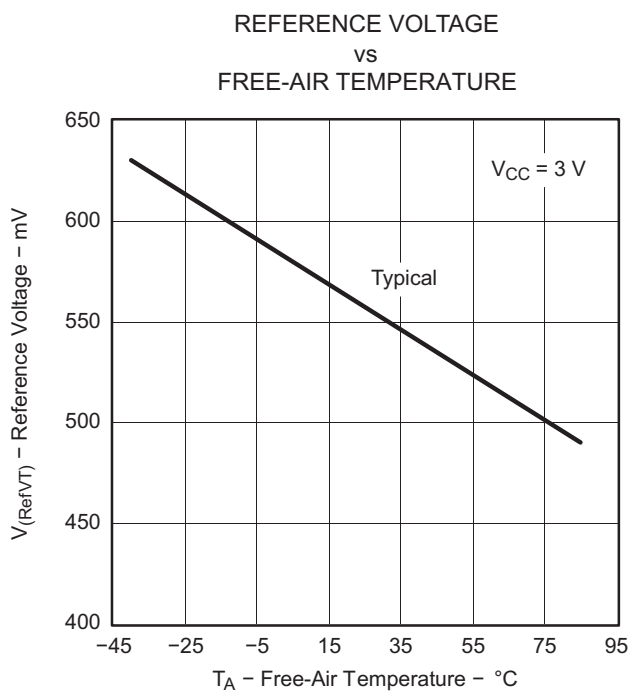

Figure 6.

Copyright © 2003–2013, Texas Instruments Incorporated

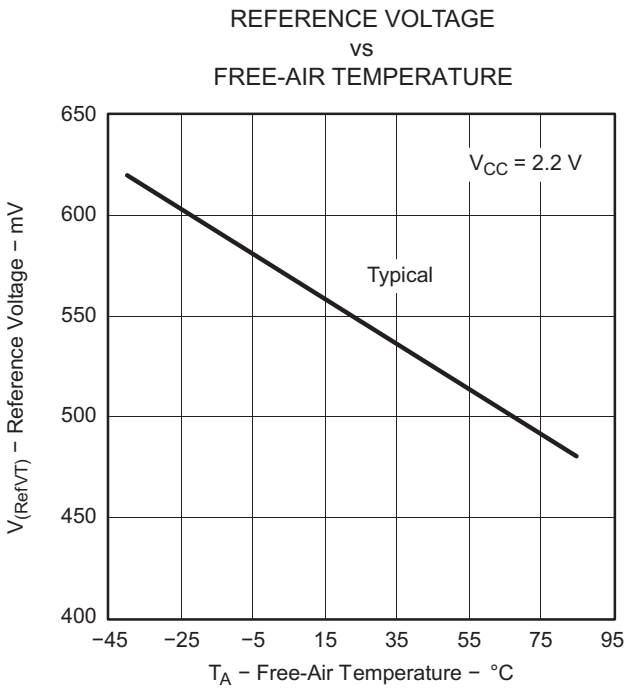

Figure 7.

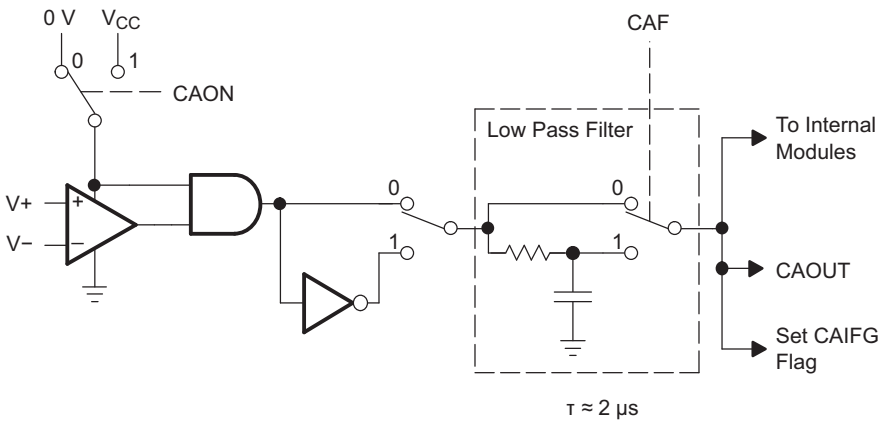

Figure 8. Block Diagram of Comparator_A Module

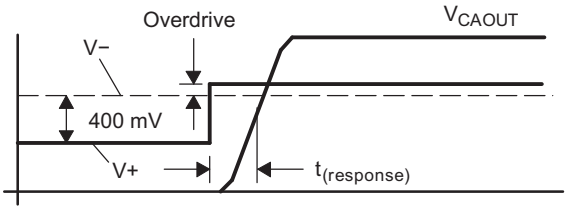

Figure 9. Overdrive Definition

POR, BOR(1)

over recommended operating free-air temperature range (unless otherwise noted)

PARAMETER		TEST CONDITIONS	MIN	TYP	MAX	UNIT
$t_{d(BOR)}$	Brownout(2)				2000	µs
$V_{CC(start)}$		$dV_{CC}/dt \le 3$ V/s (see Figure 10)		0.7 × $V_{(B_IT-)}$		V
$V_{(B_IT-)}$		$dV_{CC}/dt \le 3$ V/s (see Figure 10 through Figure 12)			1.71	V
$V_{hys(B_IT-)}$		$dV_{CC}/dt \le 3$ V/s (see Figure 10)	70	130	210	mV
$t_{(reset)}$		Pulse duration needed at $\overline{RST}$/NMI pin to accepted reset internally, V_{CC} = 2.2 V, 3 V	2			µs

(1) The current consumption of the brownout module is already included in the I_{CC} current consumption data. The voltage level $V_{(B_IT-)}$ + $V_{hys(B_IT-)}$ is ≤ 1.8 V.
(2) During power up, the CPU begins code execution following a period of $t_{d(BOR)}$ after $V_{CC} = V_{(B_IT-)} + V_{hys(B_IT-)}$. The default FLL+ settings must not be changed until $V_{CC} \ge V_{CC(min)}$, where $V_{CC(min)}$ is the minimum supply voltage for the desired operating frequency. See the *MSP430x4xx Family User's Guide* (SLAU056) for more information on the brownout and SVS circuit.

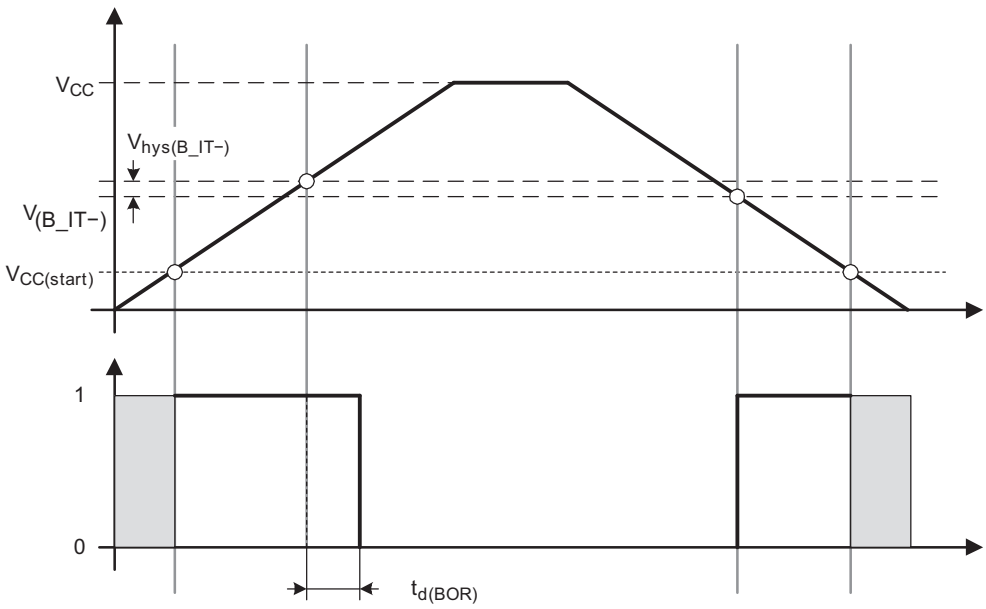

Figure 10. POR and BOR vs Supply Voltage

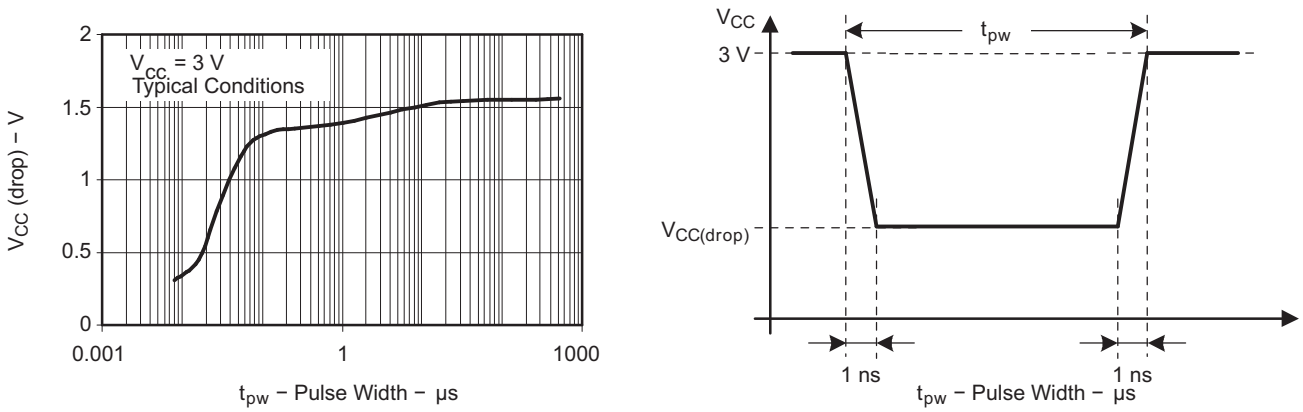

Figure 11. $V_{CC(drop)}$ Level with a Square Voltage Drop to Generate a POR/Brownout Signal

Copyright © 2003–2013, Texas Instruments Incorporated

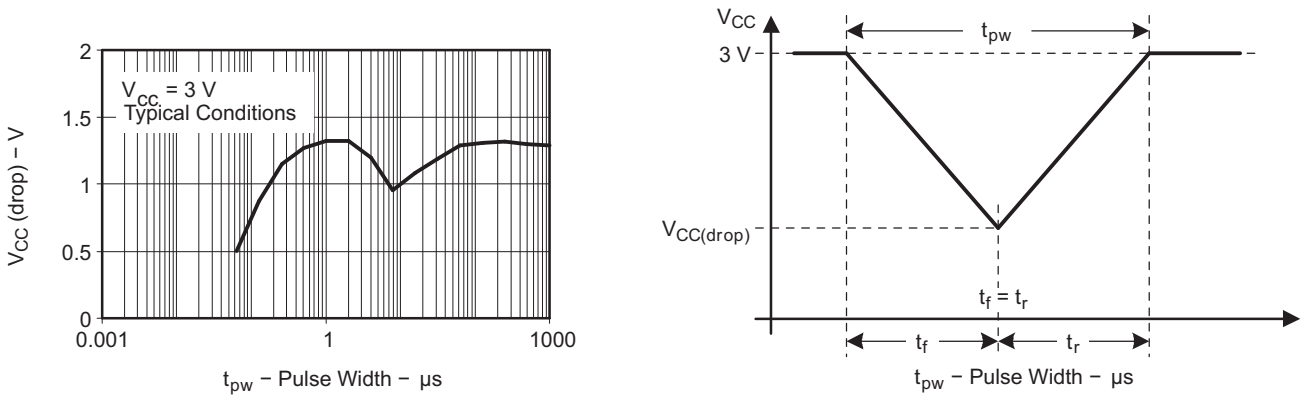

Figure 12. $V_{CC(drop)}$ Level With a Triangle Voltage Drop to Generate a POR or BOR Signal

SVS (Supply Voltage Supervisor and Monitor)(1)(2)

over recommended operating free-air temperature range (unless otherwise noted)

PARAMETER	TEST CONDITIONS		MIN	TYP	MAX	UNIT
$t_{(SVSR)}$	dV_{CC}/dt > 30 V/ms (see Figure 13)		5		150	µs
	dV_{CC}/dt ≤ 30 V/ms				2000	
$t_{d(SVSon)}$	SVSon, switch from VLD = 0 to VLD ≠ 0, V_{CC} = 3 V		20		150	µs
t_{settle}	VLD ≠ 0(3)				12	µs
$V_{(SVSstart)}$	VLD ≠ 0, V_{CC}/dt ≤ 3 V/s (see Figure 13)			1.55	1.7	V
$V_{hys(SVS_IT-)}$	V_{CC}/dt ≤ 3 V/s (see Figure 13)	VLD = 1	70	120	155	mV
		VLD = 2 to 14	$V_{(SVS_IT-)}$ x 0.004		$V_{(SVS_IT-)}$ × 0.08	
	V_{CC}/dt ≤ 3 V/s (see Figure 13), external voltage applied on A7	VLD = 15	4.4		10.4	mV
$V_{(SVS_IT-)}$	V_{CC}/dt ≤ 3 V/s (see Figure 13)	VLD = 1	1.8	1.9	2.05	V
		VLD = 2	1.94	2.1	2.25	
		VLD = 3	2.05	2.2	2.37	
		VLD = 4	2.14	2.3	2.48	
		VLD = 5	2.24	2.4	2.6	
		VLD = 6	2.33	2.5	2.71	
		VLD = 7	2.46	2.65	2.86	
		VLD = 8	2.58	2.8	3	
		VLD = 9	2.69	2.9	3.13	
		VLD = 10	2.83	3.05	3.29	
		VLD = 11	2.94	3.2	3.42	
		VLD = 12	3.11	3.35	3.61(4)	
		VLD = 13	3.24	3.5	3.76(4)	
		VLD = 14	3.43	3.7(4)	3.99(4)	
	V_{CC}/dt ≤ 3 V/s (see Figure 13), external voltage applied on A7	VLD = 15	1.1	1.2	1.3	
$I_{CC(SVS)}$(5)	VLD ≠ 0, V_{CC} = 2.2 V, 3 V			10	15	µA

(1) The current consumption of the SVS module is not included in the I_{CC} current consumption data.
(2) The SVS is not active at power up.
(3) t_{settle} is the settling time that the comparator o/p needs to have a stable level after VLD is switched from VLD ≠ 0 to a different VLD value between 2 and 15. The overdrive is assumed to be > 50 mV.
(4) The recommended operating voltage range is limited to 3.6 V.
(5) The current consumption of the SVS module is not included in the I_{CC} current consumption data.

Copyright © 2003–2013, Texas Instruments Incorporated

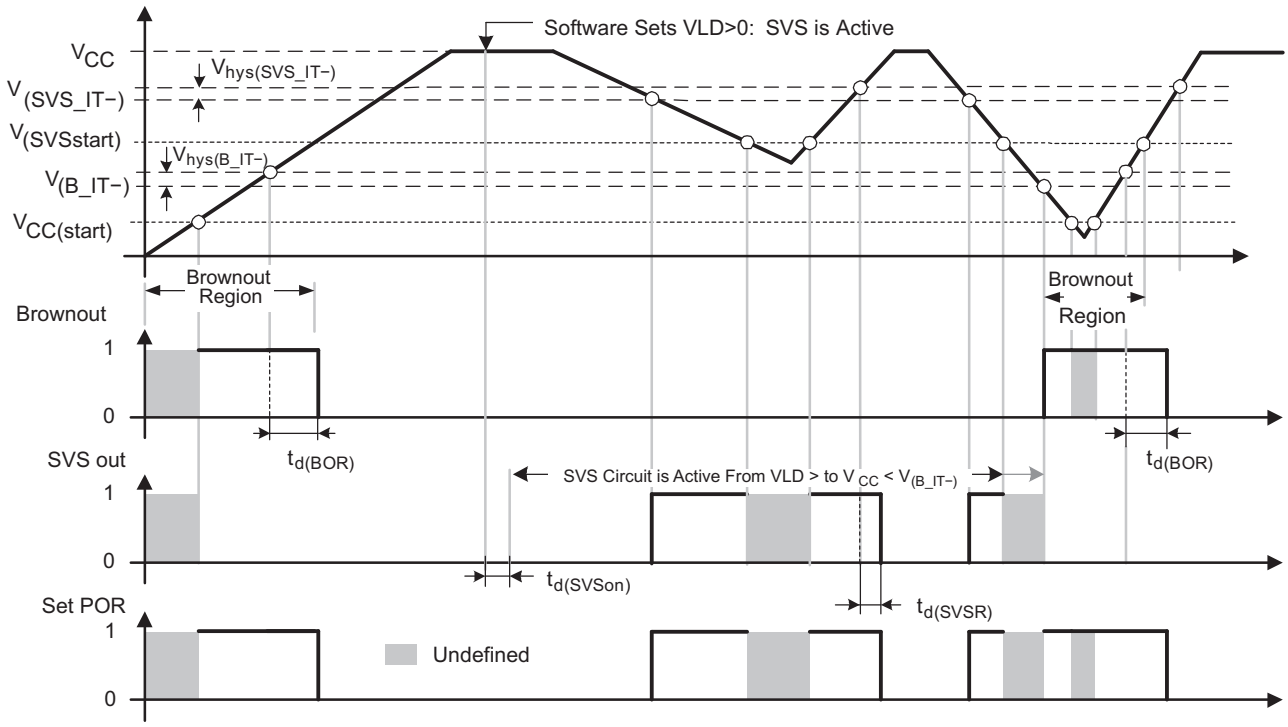

Figure 13. SVS Reset (SVSR) vs Supply Voltage

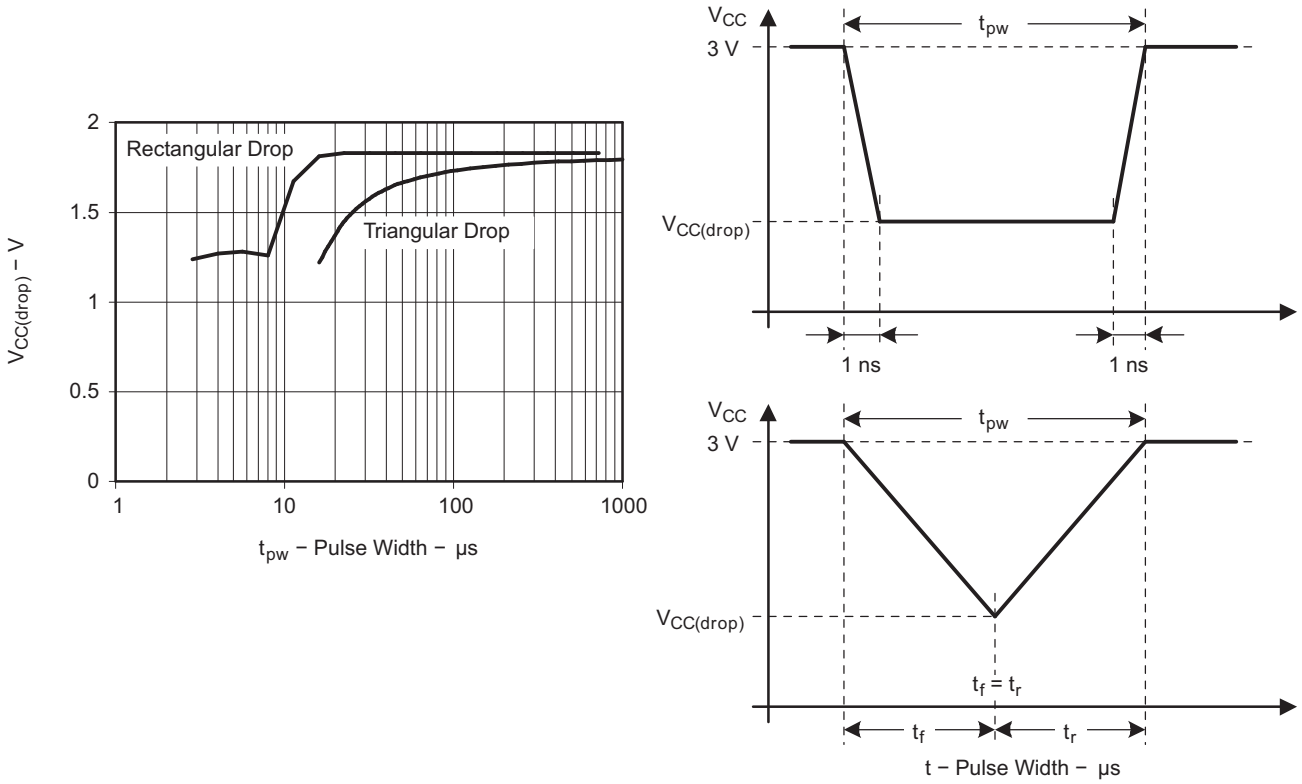

Figure 14. $V_{CC(drop)}$ with a Square Voltage Drop and a Triangle Voltage Drop to Generate an SVS Signal

Copyright © 2003–2013, Texas Instruments Incorporated

DCO

over recommended operating free-air temperature range (unless otherwise noted)

PARAMETER	TEST CONDITIONS	V_{CC}	MIN	TYP	MAX	UNIT
$f_{(DCOCLK)}$	$N_{(DCO)}$ = 01Eh, FN_8 = FN_4 = FN_3 = FN_2 = 0, D = 2, DCOPLUS = 0, $f_{Crystal}$ = 32.768 kHz	2.2 V, 3 V		1		MHz
$f_{(DCO = 2)}$	FN_8 = FN_4 = FN_3 = FN_2 = 0, DCOPLUS = 1	2.2 V	0.3	0.65	1.25	MHz
		3 V	0.3	0.7	1.3	
$f_{(DCO = 27)}$	FN_8 = FN_4 = FN_3 = FN_2 = 0, DCOPLUS = 1	2.2 V	2.5	5.6	10.5	MHz
		3 V	2.7	6.1	11.3	
$f_{(DCO = 2)}$	FN_8 = FN_4 = FN_3 = FN_2 = 1, DCOPLUS = 1	2.2 V	0.7	1.3	2.3	MHz
		3 V	0.8	1.5	2.5	
$f_{(DCO = 27)}$	FN_8 = FN_4 = FN_3 = FN_2 = 1, DCOPLUS = 1	2.2 V	5.7	10.8	18	MHz
		3 V	6.5	12.1	20	
$f_{(DCO = 2)}$	FN_8 = FN_4 = 0, FN_3 = 1, FN_2 = x, DCOPLUS = 1	2.2 V	1.2	2	3	MHz
		3 V	1.3	2.2	3.5	
$f_{(DCO = 27)}$	FN_8 = FN_4 = 0, FN_3 = 1, FN_2 = x, DCOPLUS = 1	2.2 V	9	15.5	25	MHz
		3 V	10.3	17.9	28.5	
$f_{(DCO = 2)}$	FN_8 = 0, FN_4 = 1, FN_3 = FN_2 = x, DCOPLUS = 1	2.2 V	1.8	2.8	4.2	MHz
		3 V	2.1	3.4	5.2	
$f_{(DCO = 27)}$	FN_8 = 0, FN_4 = 1, FN_3 = FN_2 = x, DCOPLUS = 1	2.2 V	13.5	21.5	33	MHz
		3 V	16	26.6	41	
$f_{(DCO = 2)}$	FN_8 = 1, FN_4 = 1 = FN_3 = FN_2 = x, DCOPLUS = 1	2.2 V	2.8	4.2	6.2	MHz
		3 V	4.2	6.3	9.2	
$f_{(DCO = 27)}$	FN_8 = 1, FN_4 = 1 = FN_3 = FN_2 = x, DCOPLUS = 1	2.2 V	21	32	46	MHz
		3 V	30	46	70	
S_n	Step size between adjacent DCO taps: $S_n = f_{DCO(Tap\ n+1)} / f_{DCO(Tap\ n)}$ (see Figure 16 for taps 21 to 27)	1 < TAP ≤ 20	1.06		1.11	
		TAP = 27	1.07		1.17	
D_t	Temperature drift, $N_{(DCO)}$ = 01Eh, FN_8 = FN_4 = FN_3 = FN_2 = 0, D = 2, DCOPLUS = 0	2.2 V	-0.2	-0.3	-0.4	%/°C
		3 V	-0.2	-0.3	-0.4	
D_V	Drift with V_{CC} variation, $N_{(DCO)}$ = 01Eh, FN_8 = FN_4 = FN_3 = FN_2 = 0, D = 2, DCOPLUS = 0	2.2 V, 3 V	0	5	15	%/V

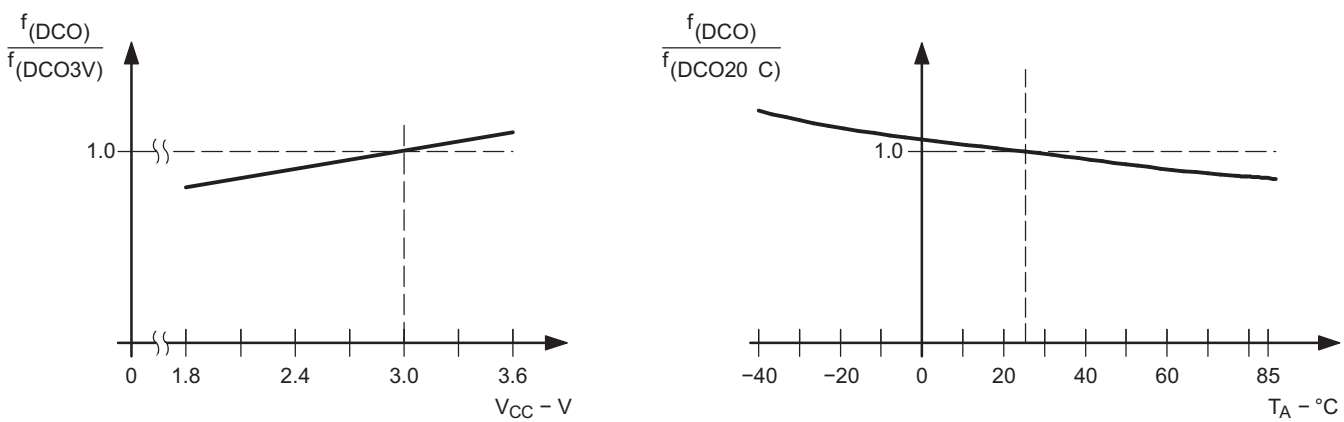

Figure 15. DCO Frequency vs Supply Voltage V_{CC} and vs Ambient Temperature

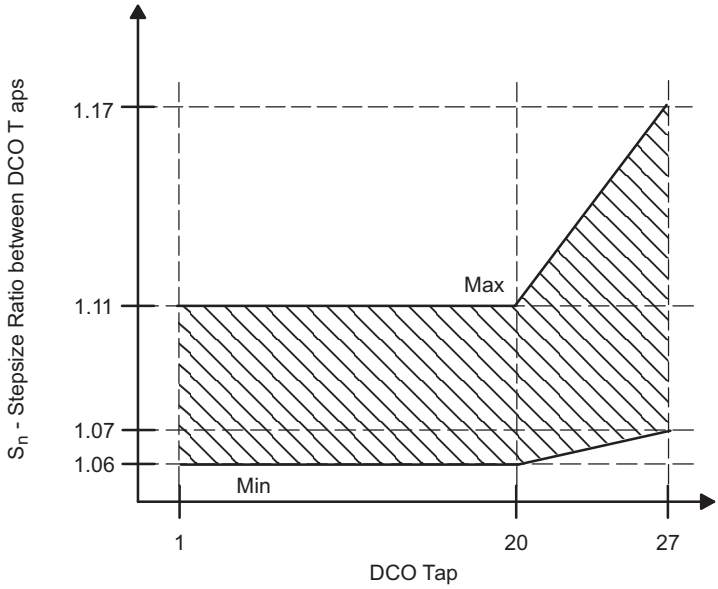

Figure 16. DCO Tap Step Size

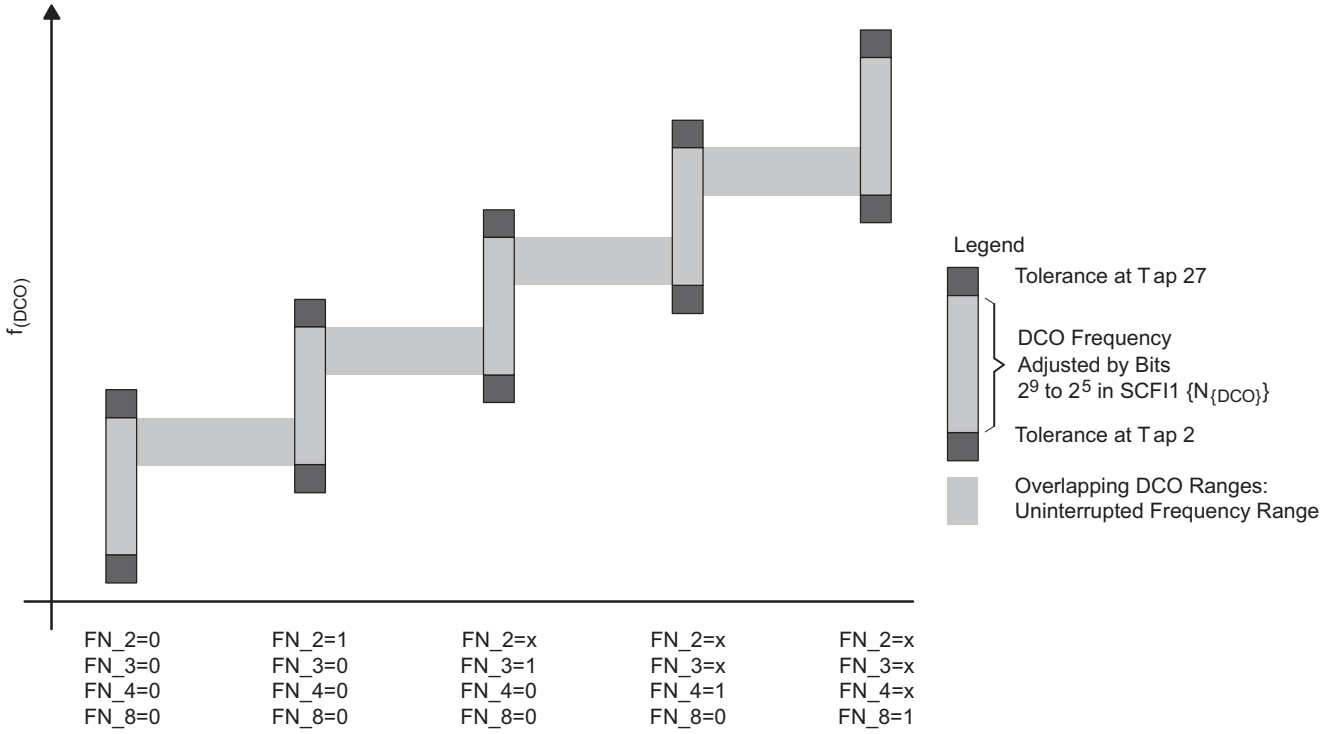

Figure 17. Five Overlapping DCO Ranges Controlled by FN_x Bits

Copyright © 2003–2013, Texas Instruments Incorporated

Crystal Oscillator, LFXT1 Oscillator[1] [2]

over recommended operating free-air temperature range (unless otherwise noted)

PARAMETER		TEST CONDITIONS	V_{CC}	MIN	TYP	MAX	UNIT
C_{XIN}	Integrated input capacitance[3]	OSCCAPx = 0h	2.2 V, 3 V		0		pF
		OSCCAPx = 1h			10		
		OSCCAPx = 2h			14		
		OSCCAPx = 3h			18		
C_{XOUT}	Integrated output capacitance[3]	OSCCAPx = 0h	2.2 V, 3 V		0		pF
		OSCCAPx = 1h			10		
		OSCCAPx = 2h			14		
		OSCCAPx = 3h			18		
V_{IL}	Input levels at XIN[4]		2.2 V, 3 V	V_{SS}		$0.2 \times V_{CC}$	V
V_{IH}				$0.8 \times V_{CC}$		V_{CC}	

(1) The parasitic capacitance from the package and board may be estimated to be 2 pF. The effective load capacitor for the crystal is $(C_{XIN} \times C_{XOUT}) / (C_{XIN} + C_{XOUT})$. This is independent of XTS_FLL.
(2) To improve EMI on the low-power LFXT1 oscillator, particularly in the LF mode (32 kHz), the following guidelines should be observed.
  (a) Keep the trace between the device and the crystal as short as possible.
  (b) Design a good ground plane around the oscillator pins.
  (c) Prevent crosstalk from other clock or data lines into oscillator pins XIN and XOUT.
  (d) Avoid running PCB traces underneath or adjacent to the XIN and XOUT pins.
  (e) Use assembly materials and techniques that avoid any parasitic load on the oscillator XIN and XOUT pins.
  (f) If conformal coating is used, ensure that it does not induce capacitive or resistive leakage between the oscillator pins.
  (g) Do not route the XOUT line to the JTAG header to support the serial programming adapter as shown in other documentation. This signal is no longer required for the serial programming adapter.
(3) External capacitance is recommended for precision real-time clock applications; OSCCAPx = 0h.
(4) Applies only when using an external logic-level clock source. XTS_FLL must be set. Not applicable when using a crystal or resonator.

Copyright © 2003–2013, Texas Instruments Incorporated

Scan IF, Port Drive, Port Timing

over recommended operating free-air temperature range (unless otherwise noted)

PARAMETER		TEST CONDITIONS	V_{CC}	MIN	TYP	MAX	UNIT
$V_{OL(SIFCHx)}$	Voltage drop due to excitation transistor's on-resistance (see Figure 18)	I(SIFCHx) = 2 mA, SIFTEN = 1	3 V			0.3	V
$V_{OH(SIFCHx)}$	Voltage drop due to damping transistor's on-resistance(1) (see Figure 18)	$I_{(SIFCHx)}$ = -200 µA, SIFTEN = 1	3 V			0.1	V
$V_{OL(SIFCOM)}$		$I_{(SIFCOM)}$ = 3 mA, SIFSH = 1	2.2 V, 3 V	0		0.1	V
$I_{SIFCHx(tri\text{-}state)}$		$V_{(SIFCHx)}$ = 0 V to AV_{CC}, port function disabled, SIFSH = 1	3 V	-50		50	nA
Δt_{dSIFCH} : $t_{wEx(tsm)}$ - t_{wSIFCH}	Change of pulse duration of internal signal SIFEX(tsm) to pulse duration at pin SIFCHx (see Figure 18)	$I_{(SIFCHx)}$ = 3 mA, $t_{Ex(SIFCHx)}$ = 500 ns ±20%	2.2 V, 3 V	-20		20	ns

(1) SIFCOM = 1.5V , supplied externally (see Figure 19)

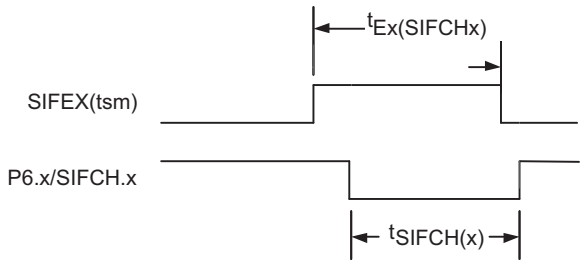

Figure 18. P6.x/SIFCHx Timing, SIFCHx Function Selected

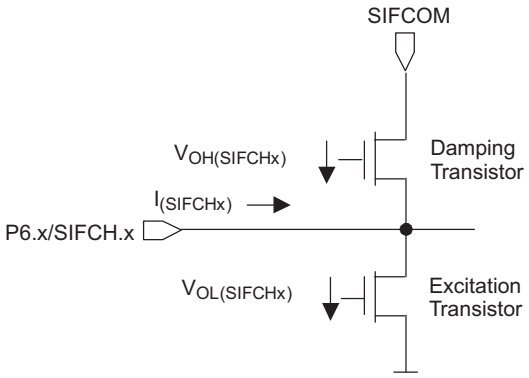

Figure 19. Voltage Drop Due to On-Resistance

Copyright © 2003–2013, Texas Instruments Incorporated

Scan IF, Sample Capacitor/Ri Timing[(1)]

over operating free-air temperature range (unless otherwise noted)

PARAMETER		TEST CONDITIONS	V_{CC}	MIN	TYP	MAX	UNIT
$C_{SHC(SIFCHx)}$	Sample capacitance at SIFCHx pin	SIFEx(tsm) = 1, SIFSH = 1	2.2 V, 3 V		5	7	pF
$Ri_{(SIFCHx)}$	Serial input resistance at the SIFCHx pin	SIFEx(tsm) = 1, SIFSH = 1	2.2 V, 3 V		1.5	3	kΩ
t_{Hold}	Maximum hold time[(2)]	ΔV_{sample} < 3 mV		62			µs

(1) The minimum sampling time (7.6 x tau for 1/2 LSB accuracy) with maximum $C_{SHC(SIFCHx)}$ and $Ri_{(SIFCHx)}$ and $Ri_{(source)}$ is $t_{sample(min)}$ ~ 7.6 × $C_{SHC(SIFCHx)}$ × ($Ri_{(SIFCHx)}$ + $Ri_{(source)}$) with $Ri_{(source)}$ estimated at 3 kΩ, $t_{sample(min)}$ = 319 ns.

(2) The sampled voltage at the sample capacitance varies less than 3 mV (ΔV_{sample}) during the hold time t_{Hold}. If the voltage is sampled after t_{Hold}, the sampled voltage may be any other value.

Copyright © 2003–2013, Texas Instruments Incorporated

Scan IF, V_{CC}/2 Generator

over operating free-air temperature range (unless otherwise noted)

PARAMETER		TEST CONDITIONS	V_{CC}	MIN	TYP	MAX	UNIT
AV_{CC}	Analog supply voltage	AV_{CC} = DV_{CC} (connected together), AV_{SS} = DV_{SS} (connected together)		2.2		3.6	V
AI_{CC}	Scan IF V_{CC}/2 generator operating supply current into AV_{CC} terminal	C_L at SIFCOM pin = 470 nF ±20%, $f_{refresh(SIFCOM)}$ = 32768 Hz	2.2 V		250	350	nA
			3 V		370	450	
$f_{refresh(SIFCOM)}$	V_{CC}/2 refresh frequency	Source clock = ACLK	2.2 V, 3 V	30	32.768		kHz
$V_{(SIFCOM)}$	Output voltage at pin SIFCOM	C_L at SIFCOM pin = 470 nF ±20%, I_{Load} = 1 µA		AV_{CC}/2 - 0.05	AV_{CC}/2	AV_{CC}/2 + 0.05	V
$I_{source(SIFCOM)}$	SIFCOM source current(1) (see Figure 20)		2.2 V	-500			µA
			3 V	-900			
$I_{sink(SIFCOM)}$	SIFCOM sink current		2.2 V	150			nA
			3 V	180			
$t_{recovery(SIFCOM)}$	Time to recover from voltage drop on load	I_{Load1} = I_{LOAD3} = 0 mA, I_{Load2} = 3 mA, $t_{load(on)}$ = 500 ns, C_L at SIFCOM pin = 470 nF ±20%	2.2 V, 3 V			30	µs
$t_{on(SIFCOM)}$	Time to reach 98% after V_{CC}/2 is switched on	C_L at SIFCOM pin = 470 nF ±20%, $f_{refresh(SIFCOM)}$ = 32768 Hz	2.2 V, 3 V		1.7	6	ms
$t_{VccSettle(SIFCOM)}$	Settling time to ±V_{CC}/512 (2 LSB) after AV_{CC} voltage change	SIFEN = 1, SIFVCC2 = 1, SIFSH = 0, AV_{CC} = AV_{CC} - 100 mV, $f_{refresh(SIFCOM)}$ = 32768 Hz	2.2 V, 3 V		80		ms
		AV_{CC} = AV_{CC} + 100 mV, $f_{refresh(SIFCOM)}$ = 32768 Hz	2.2 V, 3 V		3		

(1) The sink and source currents are a function of the voltage at the pin SIFCOM. The maximum currents are reached if SIFCOM is shorted to GND or V_{CC}. Due to the topology of the output section (see Figure 20) the V_{CC}/2 generator can source relatively large currents but can sink only small currents.

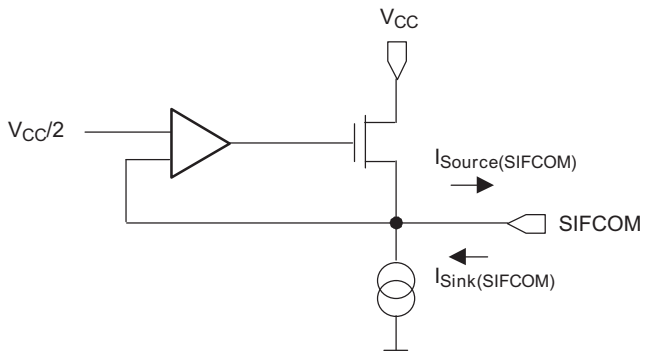

Figure 20. P6.x/SIFCHx Timing, SIFCHx Function Selected

Copyright © 2003–2013, Texas Instruments Incorporated

Scan IF, 10-bit DAC

over operating free-air temperature range (unless otherwise noted)

PARAMETER		TEST CONDITIONS	V_{CC}	MIN	TYP	MAX	UNIT
AV_{CC}	Analog supply voltage	$AV_{CC} = DV_{CC}$ (connected together) $AV_{SS} = DV_{SS}$ (connected together)		2.2		3.6	V
AI_{CC}	Scan IF 10-bit DAC operating supply current into AV_{CC} terminal	C_L at SIFCOM pin = 470 nF ±20%, $f_{refresh(SIFCOM)}$ = 32768 Hz	2.2 V		23	45	µA
			3 V		33	60	
	Resolution				10		bit
INL	Integral nonlinearity	R_L = 1000 MΩ, C_L = 20 pF	2.2 V, 3 V		±2	±5	LSB
DNL	Differential nonlinearity	R_L = 1000 MΩ, C_L = 20 pF	2.2 V, 3 V			±1	LSB
E_{ZS}	Zero scale error		2.2 V, 3 V			±10	mV
E_G	Gain error		2.2 V, 3 V			0.6	%
R_O	Output resistance				25	50	kΩ
$t_{on(SIFDAC)}$	On time after AV_{CC} of SIFDAC is switched on	$V_{+SIFCA} - V_{SIFDAC}$ = ±6 mV	2.2 V, 3 V			2	µs
$t_{Settle(SIFDAC)}$	Settling time	SIFDAC code = 1C0h → 240h, $V_{SIFDAC(240h)} - V_{+SIFCA}$ = +6 mV	2.2 V, 3 V			2	µs
		SIFDAC code = 240h → 1C0h, $V_{SIFDAC(1C0h)} - V_{+SIFCA}$ = -6 mV	2.2 V, 3 V			2	

Scan IF, Comparator

over operating free-air temperature range (unless otherwise noted)

PARAMETER		TEST CONDITIONS	V_{CC}	MIN	TYP	MAX	UNIT
AV_{CC}	Analog supply voltage	$AV_{CC} = DV_{CC}$ (connected together), $AV_{SS} = DV_{SS}$ (connected together)		2.2		3.6	V
AI_{CC}	Scan IF comparator operating supply current into AV_{CC} terminal		2.2 V		25	35	µA
			3 V		35	50	
V_{IC}	Common mode input voltage range (1)		2.2 V, 3 V	0.9		AV_{CC} - 0.6	V
V_{Offset}	Input offset voltage		2.2 V, 3 V			±30	mV
dV_{Offset}/dT	Temperature coefficient of V_{Offset}		2.2 V, 3 V		10		µV/°C
dV_{Offset}/dV_{CC}	V_{Offset} supply voltage (V_{CC}) sensitivity		2.2 V, 3 V		0.3		mV/V
V_{hys}	Input voltage hysteresis	V+terminal = V-terminal = 0.5 x V_{CC}	2.2 V	0		18	mV
			3 V	0		18	
$t_{on(SIFCA)}$	On time after SIFCA is switched on	$V_{+SIFCA} - V_{SIFDAC}$ = +6 mV, V_{+SIFCA} = 0.5 x AV_{CC}	2.2 V, 3 V			2	µs
$t_{Settle(SIFCA)}$	Settle time	$V_{+SIFCA} - V_{SIFDAC}$ = -12 mV → 6 mV, V_{+SIFCA} = 0.5 x AV_{CC}	2.2 V, 3 V			2.0	µs

(1) The comparator output is reliable when at least one of the input signals is within the common mode input voltage range.

Copyright © 2003–2013, Texas Instruments Incorporated

Scan IF, SIFCLK Oscillator

over operating free-air temperature range (unless otherwise noted)

PARAMETER		TEST CONDITIONS		V_{CC}	MIN	TYP	MAX	UNIT
AV_{CC}	Analog supply voltage	$AV_{CC} = DV_{CC}$ (connected together), $AV_{SS} = DV_{SS}$ (connected together)			2.2		3.6	V
AI_{CC}	Scan IF oscillator operating supply current into AV_{CC} terminal			2.2 V			75	µA
				3 V			90	
$f_{SIFCLKG} = 0$	Scan IF oscillator at minimum setting	$T_A = 25ºC$, SIFCLKFQ = 0000	SIFNOM = 0		1.8		3.2	MHz
			SIFNOM = 1		0.45		0.8	
$f_{SIFCLKG} = 8$	Scan IF oscillator at nominal setting	$T_A = 25ºC$, SIFCLKFQ = 0000	SIFNOM = 0			4		MHz
			SIFNOM = 1			1		
$f_{SIFCLKG} = 15$	Scan IF oscillator at maximum setting	$T_A = 25ºC$, SIFCLKFQ = 0000	SIFNOM = 0		4.48		6.8	MHz
			SIFNOM = 1		1.12		1.7	
$t_{on(SIFCLKG)}$	Settling time to full operation after V_{CC} is switched on			2.2 V, 3 V	150		500	ns
$S_{(SIFCLK)}$	Frequency change per ±1 SIFCLKFQ(SIFCTL5) step	$S_{(SIFCLK)} = f_{(SIFCLKFQ + 1)} / f_{(SIFCLKFQ)}$		2.2 V, 3 V	1.01	1.05	1.18	Hz/Hz
D_t	Temperature Coefficient	$SIFCLKFQ_{(SIFCTL5)} = 8$		2.2 V, 3 V			0.35	%/_C
D_V	Frequency vs supply voltage V_{CC} variation	$SIFCLKFQ_{(SIFCTL5)} = 8$		2.2 V, 3 V			2	%/V

Flash Memory

over recommended operating free-air temperature range (unless otherwise noted)

PARAMETER		TEST CONDITIONS	V_{CC}	MIN	TYP	MAX	UNIT
$V_{CC(PGM/ ERASE)}$	Program and erase supply voltage			2.7		3.6	V
f_{FTG}	Flash timing generator frequency			257		476	kHz
I_{PGM}	Supply current from DV_{CC} during program		2.7 V, 3.6 V		3	5	mA
I_{ERASE}	Supply current from DV_{CC} during erase		2.7 V, 3.6 V		3	7	mA
t_{CPT}	Cumulative program time	(1)	2.7 V, 3.6 V			10	ms
$t_{CMErase}$	Cumulative mass erase time	(2)	2.7 V, 3.6 V	20			ms
	Program and erase endurance			10^4	10^5		cycles
$t_{Retention}$	Data retention duration	$T_J = 25°C$		100			years
t_{Word}	Word or byte program time	(3)			35		t_{FTG}
$t_{Block, 0}$	Block program time for 1st byte or word				30		
$t_{Block, 1-63}$	Block program time for each additional byte or word				21		
$t_{Block, End}$	Block program end-sequence wait time				6		
$t_{Mass Erase}$	Mass erase time				5297		
$t_{Seg Erase}$	Segment erase time				4819		

(1) The cumulative program time must not be exceeded when writing to a 64-byte flash block. This parameter applies to all programming methods: individual word/byte write and block write modes.
(2) The mass erase duration generated by the flash timing generator is at least 11.1 ms (= 5297 × (1 / f_{FTG},max) = 5297 x (1 / 476 kHz)). To achieve the required cumulative mass erase time, the Flash Controller's mass erase operation can be repeated until this time is met. (A worst case minimum of 19 cycles are required).
(3) These values are hardwired into the Flash Controller's state machine ($t_{FTG} = 1/f_{FTG}$).

Copyright © 2003–2013, Texas Instruments Incorporated

JTAG Interface

over recommended operating free-air temperature range (unless otherwise noted)

PARAMETER		TEST CONDITIONS	V_{CC}	MIN	TYP	MAX	UNIT
f_{TCK}	TCK input frequency	(1)	2.2 V	0		5	MHz
			3V	0		10	MHz
$R_{Internal}$	Internal pullup resistance on TMS, TCK, TDI/TCLK	(2)	2.2 V, 3 V	25	60	90	kΩ

(1) f_{TCK} may be restricted to meet the timing requirements of the module selected.
(2) TMS, TDI/TCLK, and TCK pullup resistors are implemented in all versions.

JTAG Fuse(1)

over recommended operating free-air temperature range (unless otherwise noted)

PARAMETER		TEST CONDITIONS	V_{CC}	MIN	TYP	MAX	UNIT
$V_{CC(FB)}$	Supply voltage during fuse-blow condition	T_A = 25°C		2.5			V
V_{FB}	Voltage level on TDI/TCLK for fuse-blow:			6		7	V
I_{FB}	Supply current into TDI/TCLK during fuse blow					100	mA
t_{FB}	Time to blow fuse					1	ms

(1) After the fuse is blown, no further access to the MSP430 JTAG/Test and emulation features is possible. The JTAG block is switched to bypass mode.

Copyright © 2003–2013, Texas Instruments Incorporated

APPLICATION INFORMATION

Port P1, P1.0 to P1.5, Input/Output With Schmitt Trigger

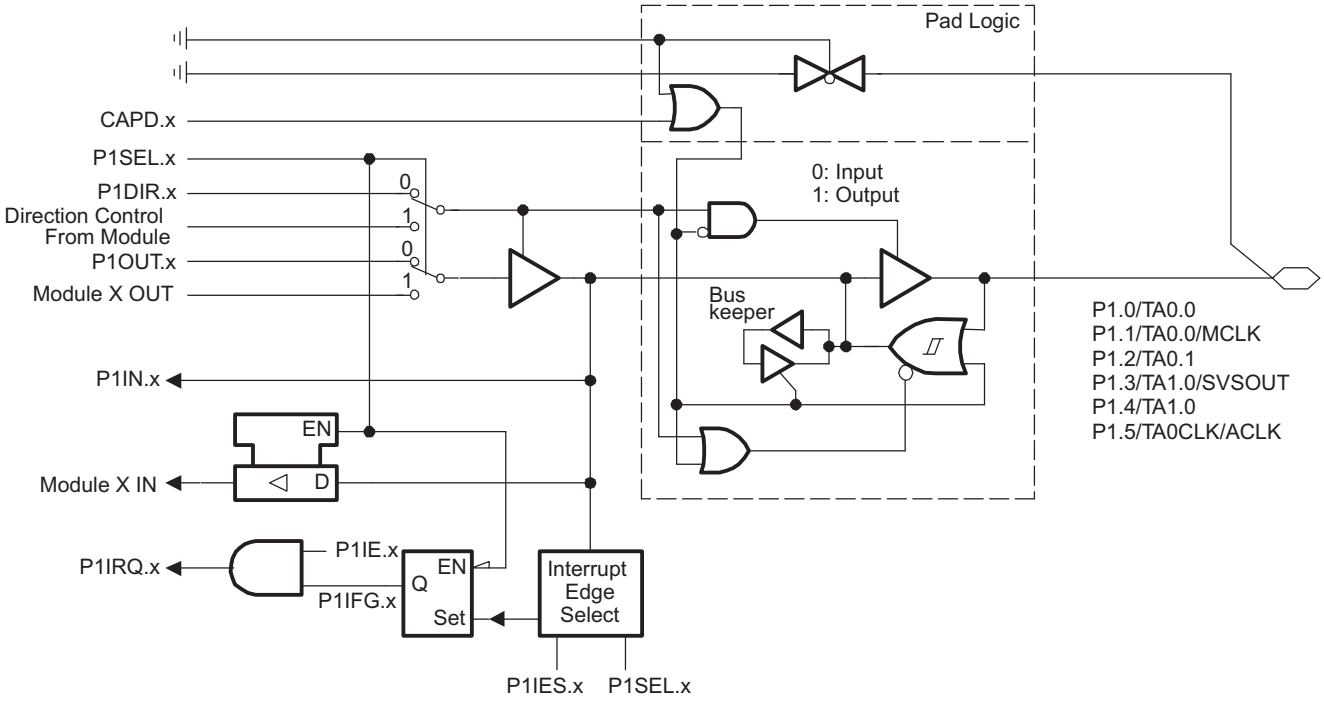

NOTE: $0 \le x \le 5$.
Port Function is Active if CAPD.x = 0

PnSEL.x	PnDIR.x	Direction Control From Module	PnOUT.x	Module X OUT	PnIN.x	Module X IN	PnIE.x	PnIFG.x	PnIES.x
P1SEL.0	P1DIR.0	P1DIR.0	P1OUT.0	Out0 Sig.†	P1IN.0	CCI0A†	P1IE.0	P1IFG.0	P1IES.0
P1SEL.1	P1DIR.1	P1DIR.1	P1OUT.1	MCLK	P1IN.1	CCI0B†	P1IE.1	P1IFG.1	P1IES.1
P1SEL.2	P1DIR.2	P1DIR.2	P1OUT.2	Out1 Sig.†	P1IN.2	CCI1A†	P1IE.2	P1IFG.2	P1IES.2
P1SEL.3	P1DIR.3	P1DIR.3	P1OUT.3	SVSOUT	P1IN.3	CCI0B‡	P1IE.3	P1IFG.3	P1IES.3
P1SEL.4	P1DIR.4	P1DIR.4	P1OUT.4	Out0 Sig.‡	P1IN.4	CCI0A‡	P1IE.4	P1IFG.4	P1IES.4
P1SEL.5	P1DIR.5	P1DIR.5	P1OUT.5	ACLK	P1IN.5	T0ACLK†	P1IE.5	P1IFG.5	P1IES.5

† Timer0_A
‡ Timer1_A

Copyright © 2003–2013, Texas Instruments Incorporated

Port P1, P1.6, P1.7 Input/Output With Schmitt Trigger

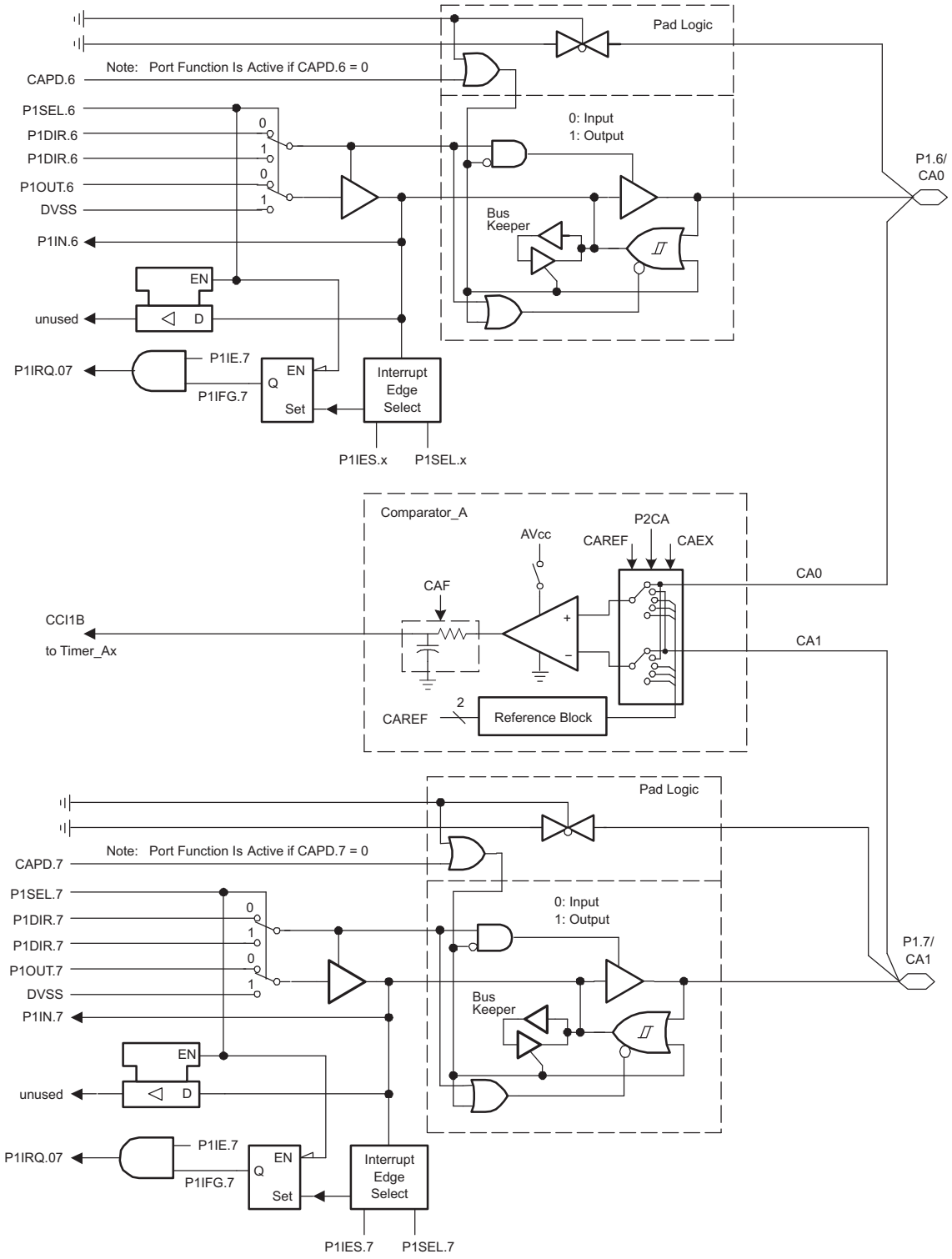

Port P2, P2.0 to P2.7, Input/Output With Schmitt Trigger

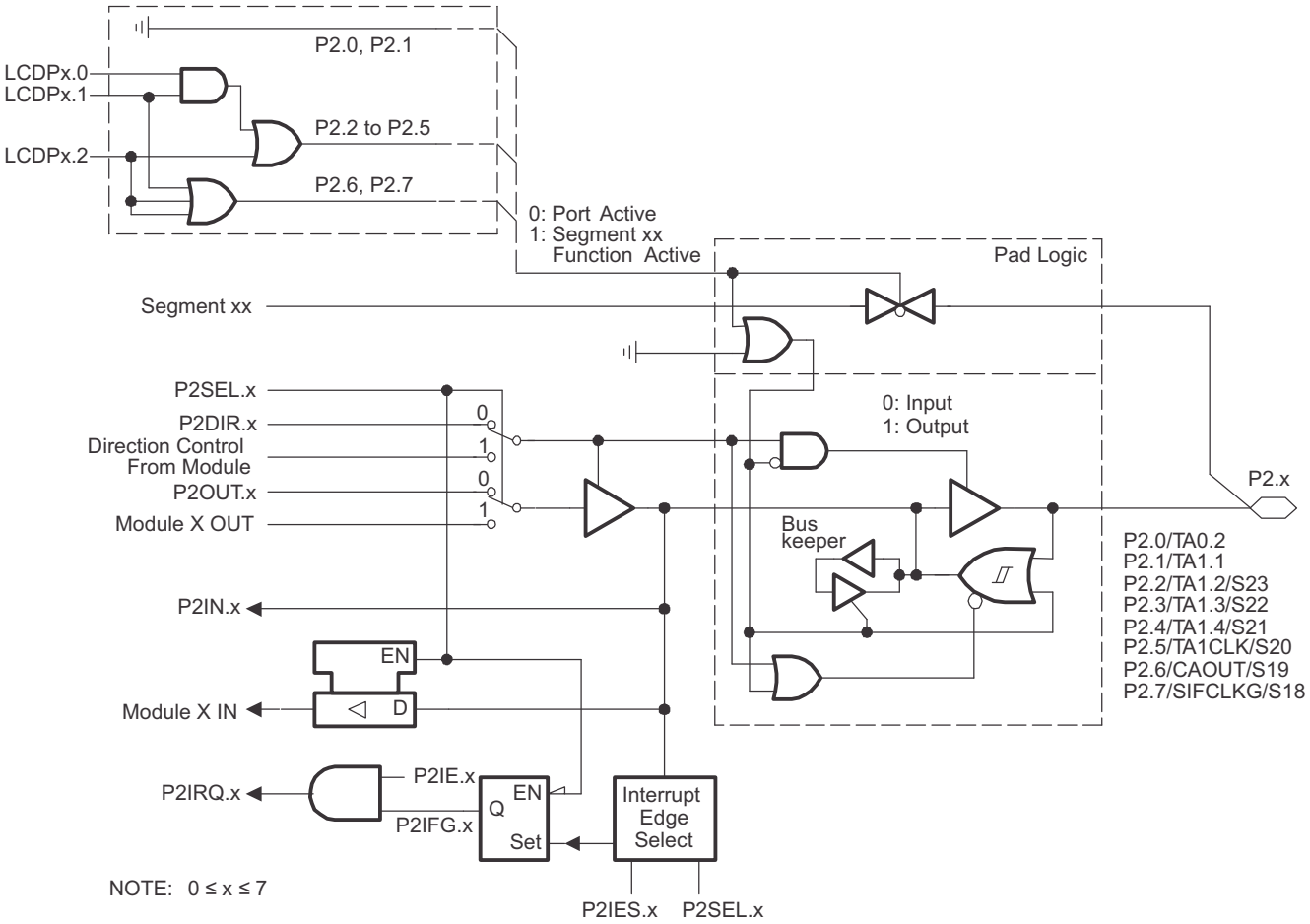

NOTE: $0 \le x \le 7$

PnSEL.x	PnDIR.x	Direction Control From Module	PnOUT.x	Module X OUT	PnIN.x	Module X IN	PnIE.x	PnIFG.x	PnIES.x
P2SEL.0	P2DIR.0	P2DIR.0	P2OUT.0	Out2 Sig.†	P2IN.0	CCI2A†	P2IE.0	P2IFG.0	P2IES.0
P2SEL.1	P2DIR.1	P2DIR.1	P2OUT.1	Out1 Sig.‡	P2IN.1	CCI1A‡	P2IE.1	P2IFG.1	P2IES.1
P2SEL.2	P2DIR.2	P2DIR.2	P2OUT.2	Out2 Sig.‡	P2IN.2	CCI2A‡	P2IE.2	P2IFG.2	P2IES.2
P2SEL.3	P2DIR.3	P2DIR.3	P2OUT.3	Out3 Sig.‡	P2IN.3	CCI3A‡	P2IE.3	P2IFG.3	P2IES.3
P2SEL.4	P2DIR.4	P2DIR.4	P2OUT.4	Out4 Sig.‡	P2IN.4	CCI4A‡	P2IE.4	P2IFG.4	P2IES.4
P2SEL.5	P2DIR.5	P2DIR.5	P2OUT.5	DVSS	P2IN.5	TA1CLK1‡	P2IE.5	P2IFG.5	P2IES.5
P2SEL.6	P2DIR.6	P2DIR.6	P2OUT.6	CAOUT	P2IN.6	Unused	P2IE.6	P2IFG.6	P2IES.6
P2SEL.7	P2DIR.7	P2DIR.7	P2OUT.7	SIFCLKG§	P2IN.7	Unused	P2IE.7	P2IFG.7	P2IES.7

†Timer0_A
‡Timer1_A
§Scan IF

Copyright © 2003–2013, Texas Instruments Incorporated

Port P3, P3.0 to P3.7, Input/Output With Schmitt Trigger

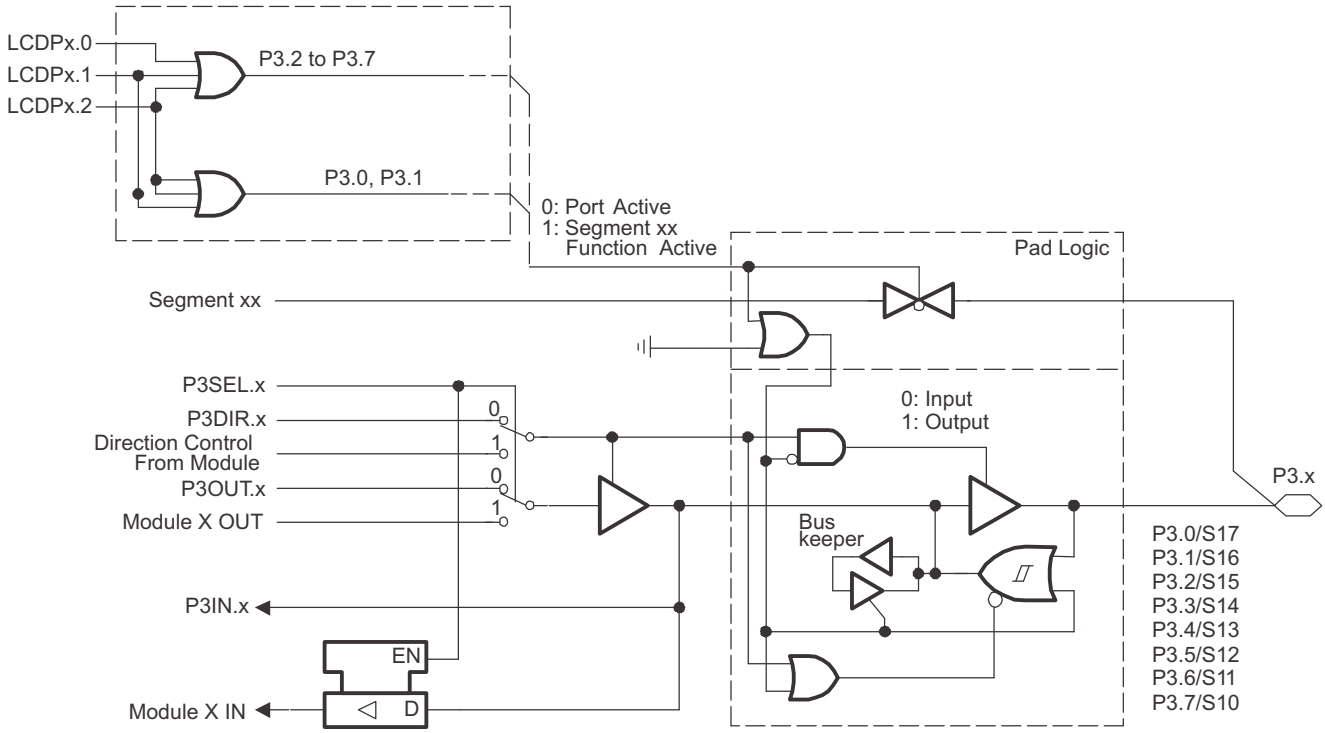

NOTE: $0 \le x \le 7$

PnSEL.x	PnDIR.x	Direction Control From Module	PnOUT.x	Module X OUT	PnIN.x	Module X IN
P3SEL.0	P3DIR.0	P3DIR.0	P3OUT.0	DVSS	P3IN.0	Unused
P3SEL.1	P3DIR.1	P3DIR.1	P3OUT.1	DVSS	P3IN.1	Unused
P3SEL.2	P3DIR.2	P3DIR.2	P3OUT.2	DVSS	P3IN.2	Unused
P3SEL.3	P3DIR.3	P3DIR.3	P3OUT.3	DVSS	P3IN.3	Unused
P3SEL.4	P3DIR.4	P3DIR.4	P3OUT.4	DVSS	P3IN.4	Unused
P3SEL.5	P3DIR.5	P3DIR.5	P3OUT.5	DVSS	P3IN.5	Unused
P3SEL.6	P3DIR.6	P3DIR.6	P3OUT.6	DVSS	P3IN.6	Unused
P3SEL.7	P3DIR.7	P3DIR.7	P3OUT.7	DVSS	P3IN.7	Unused

Copyright © 2003–2013, Texas Instruments Incorporated

Port P4, P4.0 to P4.7, Input/Output With Schmitt Trigger

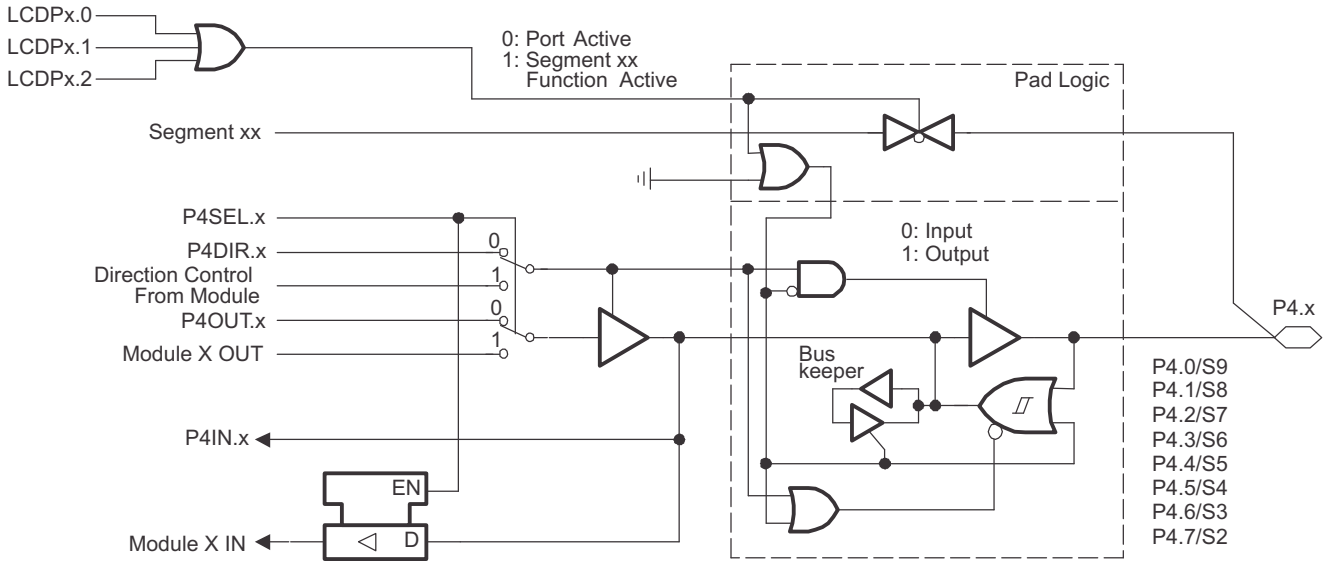

NOTE: $0 \le x \le 7$

PnSEL.x	PnDIR.x	Direction Control From Module	PnOUT.x	Module X OUT	PnIN.x	Module X IN
P4SEL.0	P4DIR.0	P4DIR.0	P4OUT.0	DVSS	P4IN.0	Unused
P4SEL.1	P4DIR.1	P4DIR.1	P4OUT.1	DVSS	P4IN.1	Unused
P4SEL.2	P4DIR.2	P4DIR.2	P4OUT.2	DVSS	P4IN.2	Unused
P4SEL.3	P4DIR.3	P4DIR.3	P4OUT.3	DVSS	P4IN.3	Unused
P4SEL.4	P4DIR.4	P4DIR.4	P4OUT.4	DVSS	P4IN.4	Unused
P4SEL.5	P4DIR.5	P4DIR.5	P4OUT.5	DVSS	P4IN.5	Unused
P4SEL.6	P4DIR.6	P4DIR.6	P4OUT.6	DVSS	P4IN.6	Unused
P4SEL.7	P4DIR.7	P4DIR.7	P4OUT.7	DVSS	P4IN.7	Unused

Copyright © 2003–2013, Texas Instruments Incorporated

Port P5, P5.0, P5.1, Input/Output With Schmitt Trigger

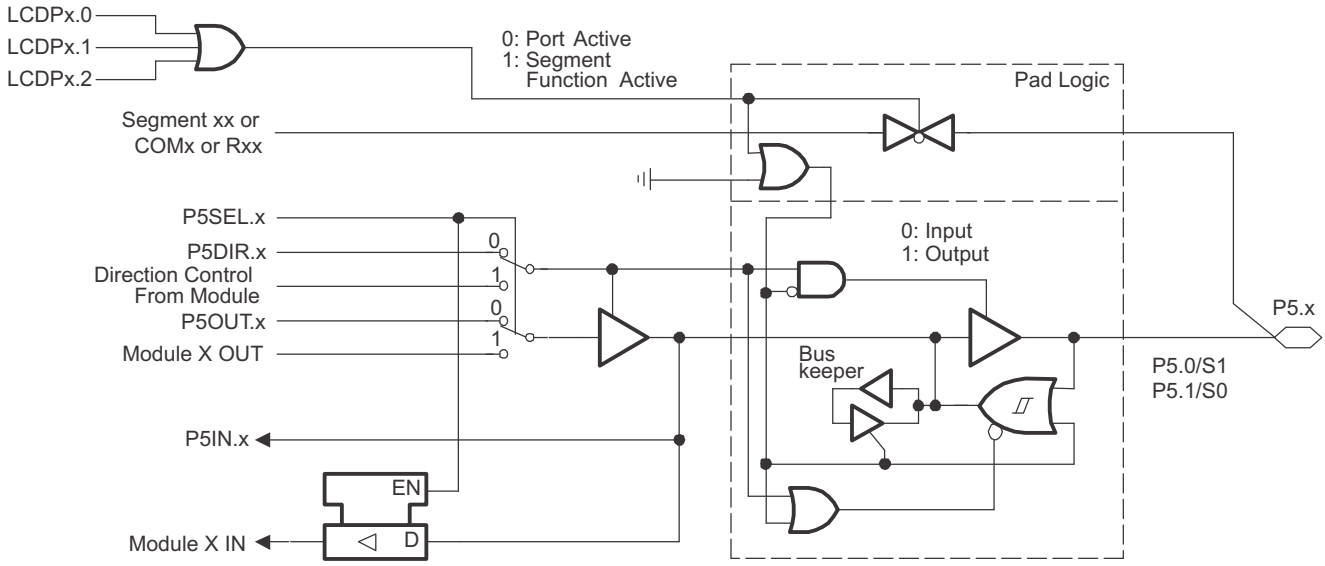

NOTE: x = 0, 1

PnSEL.x	PnDIR.x	Direction Control From Module	PnOUT.x	Module X OUT	PnIN.x	Module X IN	Segment
P5SEL.0	P5DIR.0	P5DIR.0	P5OUT.0	DVSS	P5IN.0	Unused	S1
P5SEL.1	P5DIR.1	P5DIR.1	P5OUT.1	DVSS	P5IN.1	Unused	S0

Port P5, P5.2 to P5.4, Input/Output With Schmitt Trigger

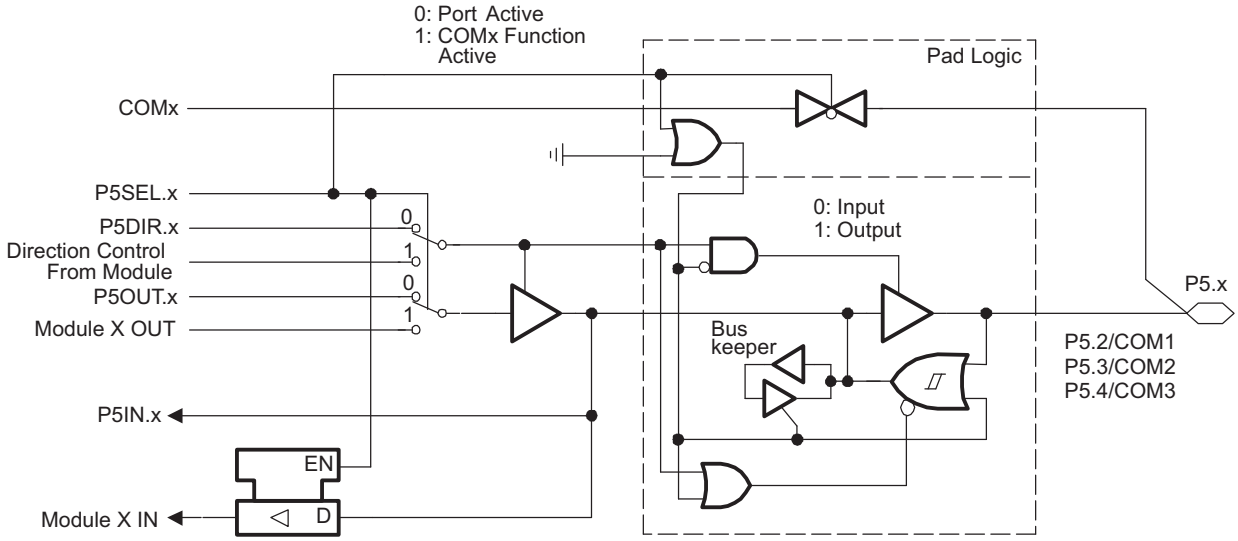

NOTE: $2 \le x \le 4$

PnSEL.x	PnDIR.x	Direction Control From Module	PnOUT.x	Module X OUT	PnIN.x	Module X IN	COMx
P5SEL.2	P5DIR.2	P5DIR.2	P5OUT.2	DVSS	P5IN.2	Unused	COM1
P5SEL.3	P5DIR.3	P5DIR.3	P5OUT.3	DVSS	P5IN.3	Unused	COM2
P5SEL.4	P5DIR.4	P5DIR.4	P5OUT.4	DVSS	P5IN.4	Unused	COM3

Copyright © 2003–2013, Texas Instruments Incorporated

Port P5, P5.5 to P5.7, Input/Output With Schmitt Trigger

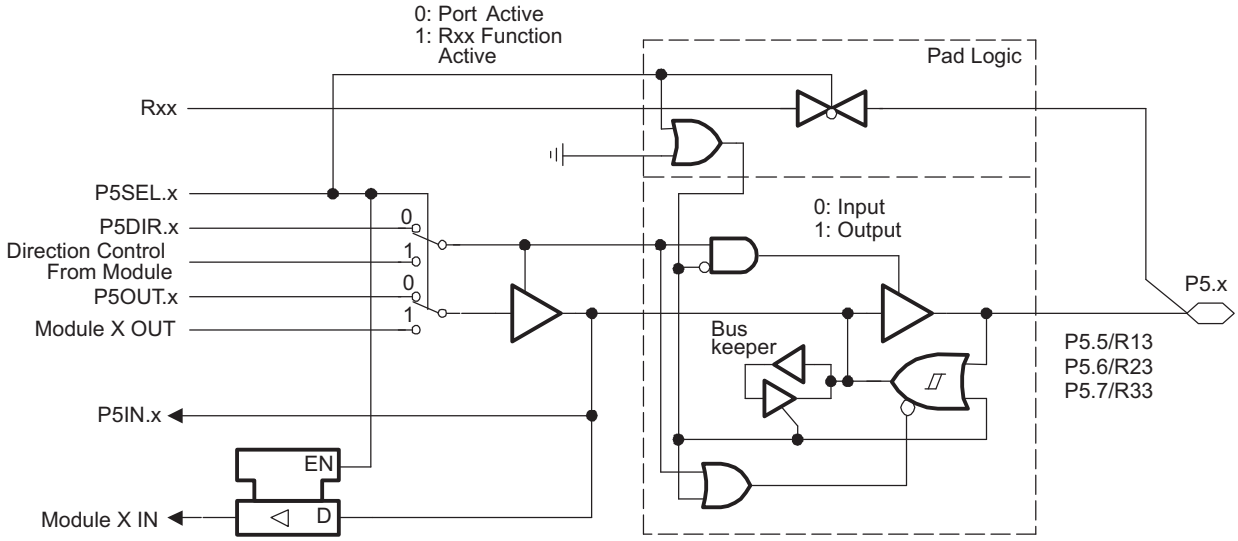

NOTE: 5 ≤ x ≤ 7

PnSEL.x	PnDIR.x	Direction Control From Module	PnOUT.x	Module X OUT	PnIN.x	Module X IN	Rxx
P5SEL.5	P5DIR.5	P5DIR.5	P5OUT.5	DVSS	P5IN.5	Unused	R13
P5SEL.6	P5DIR.6	P5DIR.6	P5OUT.6	DVSS	P5IN.6	Unused	R23
P5SEL.7	P5DIR.7	P5DIR.7	P5OUT.7	DVSS	P5IN.7	Unused	R33

Copyright © 2003–2013, Texas Instruments Incorporated

Port P6, P6.0, P6.1, P6.2, P6.4, P6.5, Input/Output With Schmitt Trigger

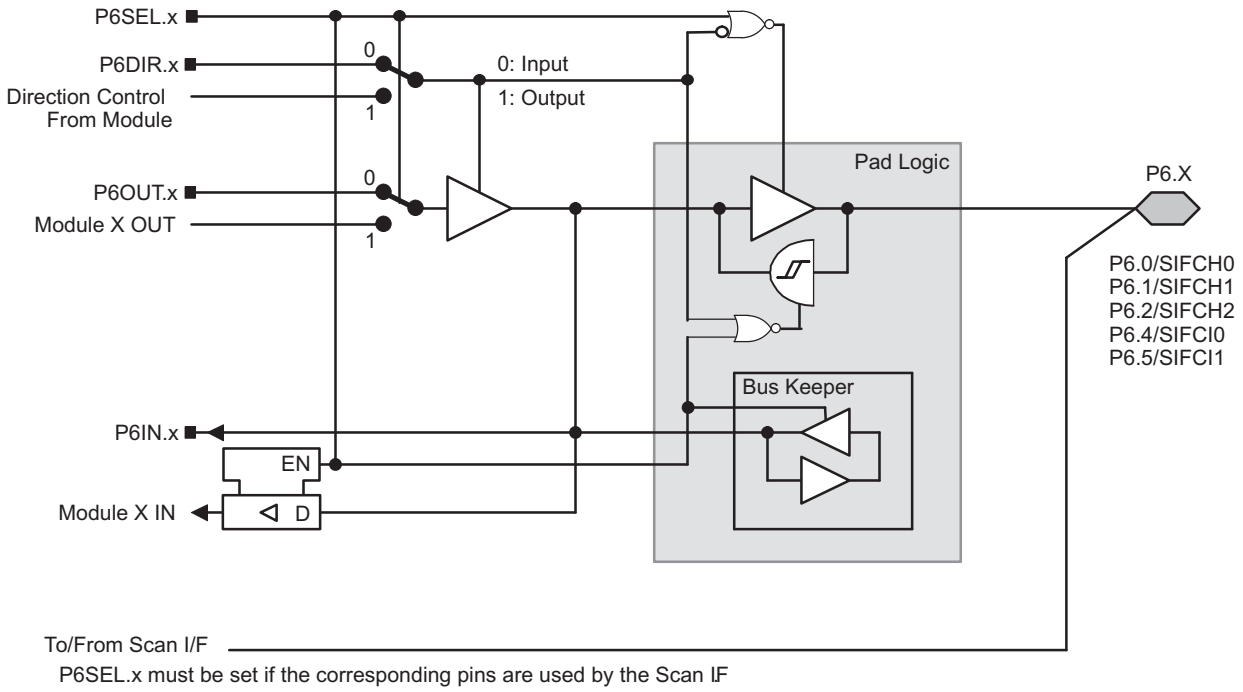

x: Bit Identifier = 0, 1, 2, 4, or 5

NOTE

Analog signals applied to digital gates can cause current flow from the positive to the negative terminal. The throughput current flows if the analog signal is in the range of transitions 0→1 or 1→0. The value of the throughput current depends on the driving capability of the gate. For MSP430, it is approximately 100 µA.

Use P6SEL.x=1 to prevent throughput current. P6SEL.x should be set, if an analog signal is applied to the pin.

PnSEL.x	PnDIR.x	Dir. Control From Module	PnOUT.x	Module X OUT	PnIN.x	Module X IN
P6Sel.0	P6DIR.0	P6DIR.0	P6OUT.0	DVSS	P6IN.0	unused
P6Sel.1	P6DIR.1	P6DIR.1	P6OUT.1	DVSS	P6IN.1	unused
P6Sel.2	P6DIR.2	P6DIR.2	P6OUT.2	DVSS	P6IN.2	unused
P6Sel.4	P6DIR.4	P6DIR.4	P6OUT.4	DVSS	P6IN.4	unused
P6Sel.5	P6DIR.5	P6DIR.5	P6OUT.5	DVSS	P6IN.5	unused

Copyright © 2003–2013, Texas Instruments Incorporated

NOTE

The signal at pins P6.x/SIFCHx and P6.x/SIFCIx are shared by Port P6 and the Scan IF module. P6SEL.x must be set if the corresponding pins are used by the Scan IF.

Port P6, P6.3 Input/Output With Schmitt Trigger

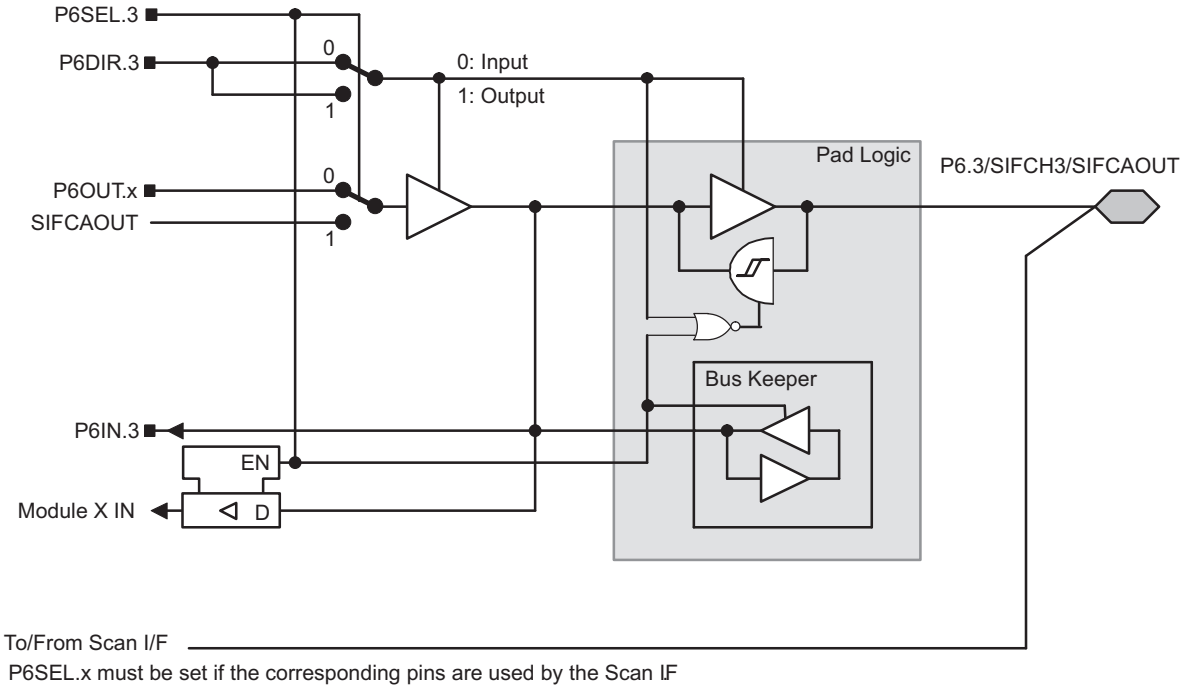

NOTE

Analog signals applied to digital gates can cause current flow from the positive to the negative terminal. The throughput current flows if the analog signal is in the range of transitions 0→1 or 1→0. The value of the throughput current depends on the driving capability of the gate. For MSP430, it is approximately 100 µA.

Use P6SEL.x=1 to prevent throughput current. P6SEL.x should be set, if an analog signal is applied to the pin.

P6SEL.3	P6DIR.3	Port Function
0	0	P6.3 Input
0	1	P6.3 Output
1	0	SIFCH3 (Scan IF channel 3 excitation output and comparator input)
1	1	SIFCAOUT (Comparator output)

Port P6, P6.6 Input/Output With Schmitt Trigger

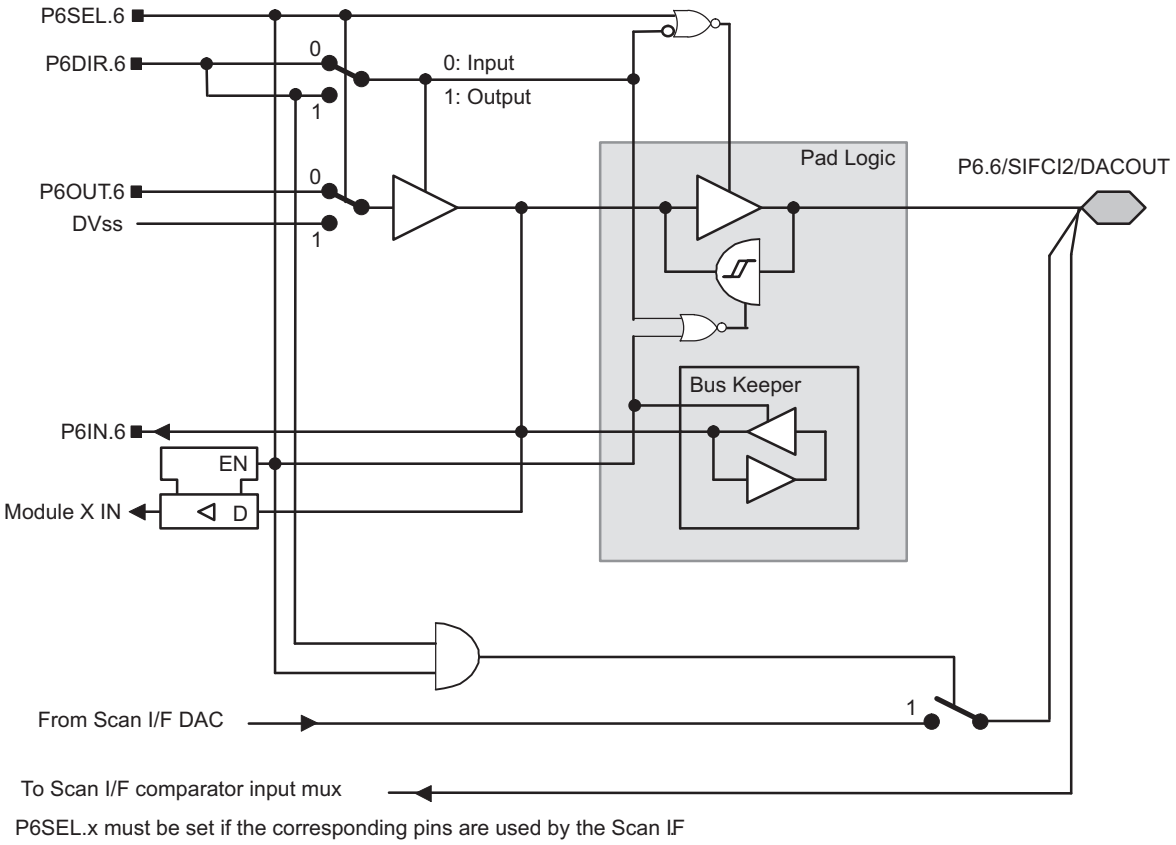

NOTE

Analog signals applied to digital gates can cause current flow from the positive to the negative terminal. The throughput current flows if the analog signal is in the range of transitions 0→1 or 1→0. The value of the throughput current depends on the driving capability of the gate. For MSP430, it is approximately 100 µA.

Use P6SEL.x=1 to prevent throughput current. P6SEL.x should be set, if an analog signal is applied to the pin.

P6SEL.6	P6DIR.6	Port Function
0	0	P6.6 Input
0	1	P6.6 Output
1	0	SIFCI2 (Scan IF channel 2 comparator input)
1	1	SIFDAOUT (Scan IF DAC output)

Copyright © 2003–2013, Texas Instruments Incorporated

Port P6, P6.7 Input/Output With Schmitt Trigger

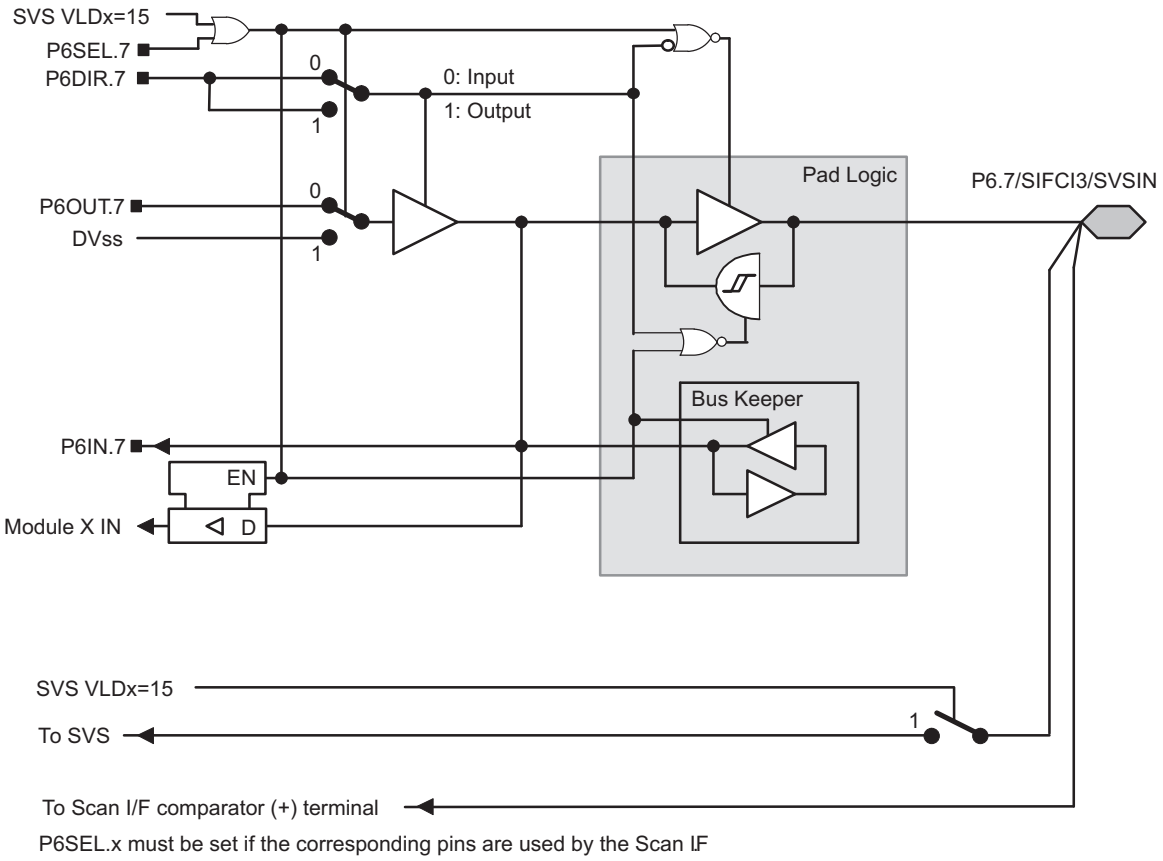

NOTE

Analog signals applied to digital gates can cause current flow from the positive to the negative terminal. The throughput current flows if the analog signal is in the range of transitions 0→1 or 1→0. The value of the throughput current depends on the driving capability of the gate. For MSP430, it is approximately 100 µA.

Use P6SEL.x=1 to prevent throughput current. P6SEL.x should be set, if an analog signal is applied to the pin.

SVS VLDx = 15	P6SEL.7	P6DIR.7	Port Function
0	0	0	P6.7 Input
0	0	1	P6.7 Output
0	1	X	SIFCI3 (Scan IF channel 3 comparator input)
1	X	X	SVSIN

JTAG Pins TMS, TCK, TDI/TCLK, TDO/TDI, Input/Output with Schmitt-Trigger or Output

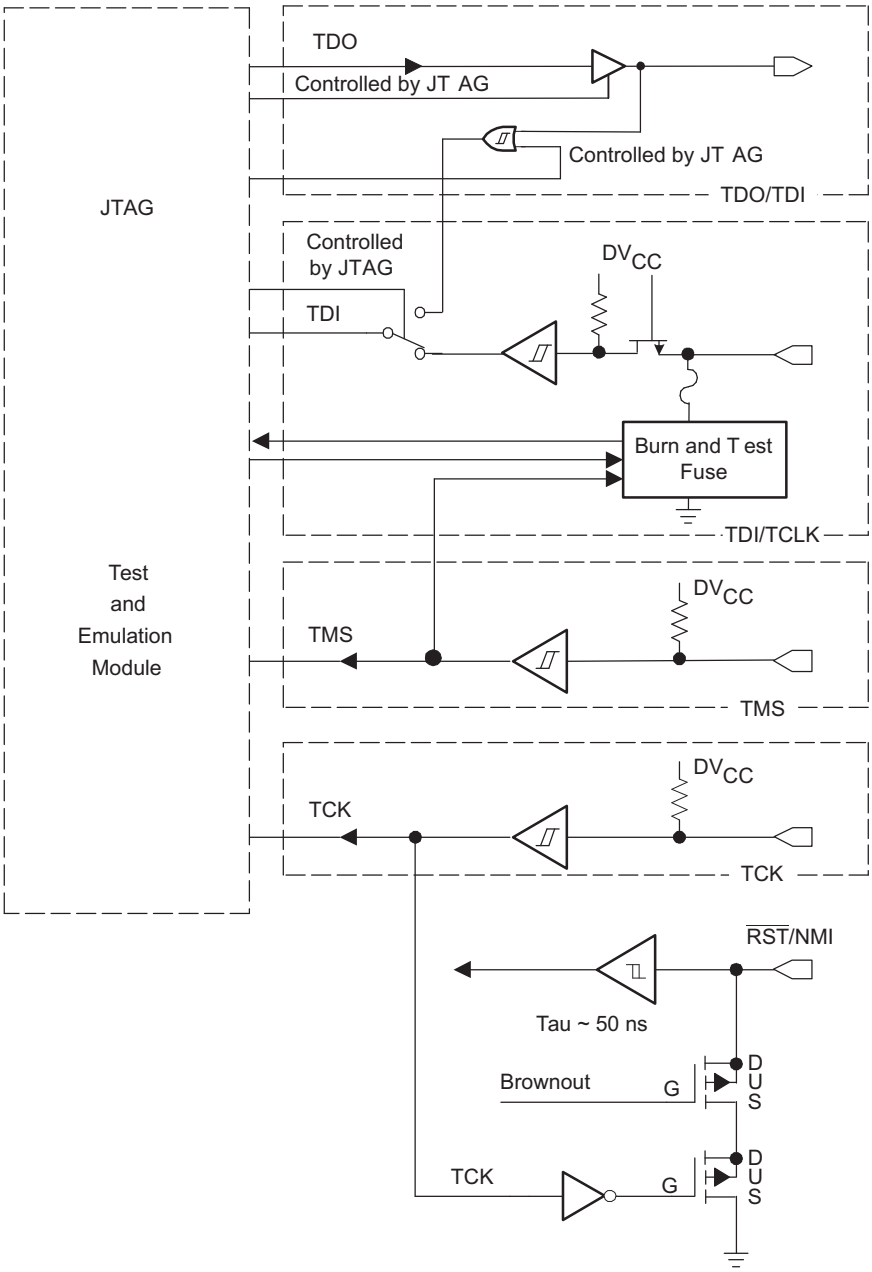

Copyright © 2003–2013, Texas Instruments Incorporated

JTAG Fuse Check Mode

MSP430 devices that have the fuse on the TDI/TCLK terminal have a fuse check mode that tests the continuity of the fuse the first time the JTAG port is accessed after a power-on reset (POR). When activated, a fuse check current ($I_{(TF)}$) of 1.8 mA at 3 V can flow from the TDI/TCLK pin to ground if the fuse is not burned. Care must be taken to avoid accidentally activating the fuse check mode and increasing overall system power consumption.

Activation of the fuse check mode occurs with the first negative edge on the TMS pin after power up or if the TMS is being held low during power up. The second positive edge on the TMS pin deactivates the fuse check mode. After deactivation, the fuse check mode remains inactive until another POR occurs. After each POR the fuse check mode has the potential to be activated.

The fuse check current only flows when the fuse check mode is active and the TMS pin is in a low state (see Figure 21). Therefore, the additional current flow can be prevented by holding the TMS pin high (default condition). The JTAG pins are terminated internally and therefore do not require external termination.

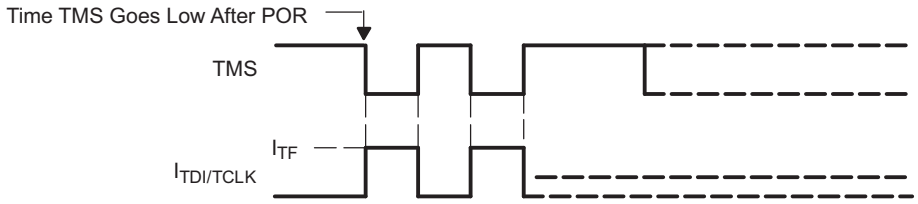

Figure 21. Fuse Check Mode Current

REVISION HISTORY

REVISION	COMMENTS
SLAS383	Initial release
SLAS383A	Clarified descriptions for AV_{CC} and AV_{SS} in Terminal Functions table (page 4) Clarified notes in Interrupt Vector Addresses (page 8) Removed V_{IL} and V_{IH} entries from Recommended Operating Conditions (page 18) Changed note 2 on Recommended Operating Conditions (page 18) Added to Wakeup LPM3 table (page 22) Removed TAx references in Comparator_A table (page 23) Clarified notes on Flash Memory table (page 36)
SLAS383B	Updated functional block diagram (page 3) Clarified test conditions in recommended operating conditions table (page 18) Clarified test conditions in electrical characteristics table (page 19) Added $I_{lkg(Px.x)}$ for all ports in leakage current table (page 20) Clarified test conditions in DCO table (page 29) Changed t_{CPT} maximum value from 4 ms to 10 ms in Flash Memory table (page 36)
SLAS383C	Updated max values for V_{IC} and V_{hys} in Scan IF, Comparator table (page 35)
SLAS383D	Added information about FW428 and FW429
SLAS383E	Recommended Operating Conditions, Added test conditions for typical values. Port P2, P2.0 to P2.7, Input/Output With Schmitt Trigger, At the top left of the image, changed LCDM.5, LCDM.6, and LCDM.7 to LCDPx.0, LCDPx.1, and LCDPx.2, respectively. Port P3, P3.0 to P3.7, Input/Output With Schmitt Trigger, At the top left of the image, changed LCDM.5, LCDM.6, and LCDM.7 to LCDPx.0, LCDPx.1, and LCDPx.2, respectively. Port P4, P4.0 to P4.7, Input/Output With Schmitt Trigger, At the top left of the image, changed LCDM.5, LCDM.6, and LCDM.7 to LCDPx.0, LCDPx.1, and LCDPx.2, respectively. Port P5, P5.0, P5.1, Input/Output With Schmitt Trigger, At the top left of the image, changed LCDM.5, LCDM.6, and LCDM.7 to LCDPx.0, LCDPx.1, and LCDPx.2, respectively.

Copyright © 2003–2013, Texas Instruments Incorporated

PACKAGING INFORMATION

Orderable Device	Status (1)	Package Type	Package Drawing	Pins	Package Qty	Eco Plan (2)	Lead finish/ Ball material (6)	MSL Peak Temp (3)	Op Temp (°C)	Device Marking (4/5)	Samples
FW427IPMR-ACTA	ACTIVE	LQFP	PM	64	1000	RoHS & Green	NIPDAU	Level-3-260C-168 HR	-40 to 85	M430FW427 REV #	Samples
MSP430FW423IPM	ACTIVE	LQFP	PM	64	160	RoHS & Green	NIPDAU	Level-3-260C-168 HR	-40 to 85	M430FW423	Samples
MSP430FW423IPMR	ACTIVE	LQFP	PM	64	1000	RoHS & Green	NIPDAU	Level-3-260C-168 HR	-40 to 85	M430FW423	Samples
MSP430FW425IPM	ACTIVE	LQFP	PM	64	160	RoHS & Green	NIPDAU	Level-3-260C-168 HR	-40 to 85	M430FW425	Samples
MSP430FW425IPMR	ACTIVE	LQFP	PM	64	1000	RoHS & Green	NIPDAU	Level-3-260C-168 HR	-40 to 85	M430FW425	Samples
MSP430FW427IPM	ACTIVE	LQFP	PM	64	160	RoHS & Green	NIPDAU	Level-3-260C-168 HR	-40 to 85	M430FW427 REV #	Samples
MSP430FW427IPMR	ACTIVE	LQFP	PM	64	1000	RoHS & Green	NIPDAU	Level-3-260C-168 HR	-40 to 85	M430FW427 REV #	Samples
MSP430FW428IPMR	ACTIVE	LQFP	PM	64	1000	RoHS & Green	NIPDAU	Level-3-260C-168 HR	-40 to 85	M430FW428	Samples
MSP430FW429IPM	ACTIVE	LQFP	PM	64	160	RoHS & Green	NIPDAU	Level-3-260C-168 HR	-40 to 85	M430FW429	Samples
MSP430FW429IPMR	ACTIVE	LQFP	PM	64	1000	RoHS & Green	NIPDAU	Level-3-260C-168 HR	-40 to 85	M430FW429	Samples

(1) The marketing status values are defined as follows:
ACTIVE: Product device recommended for new designs.
LIFEBUY: TI has announced that the device will be discontinued, and a lifetime-buy period is in effect.
NRND: Not recommended for new designs. Device is in production to support existing customers, but TI does not recommend using this part in a new design.
PREVIEW: Device has been announced but is not in production. Samples may or may not be available.
OBSOLETE: TI has discontinued the production of the device.

(2) **RoHS:** TI defines "RoHS" to mean semiconductor products that are compliant with the current EU RoHS requirements for all 10 RoHS substances, including the requirement that RoHS substance do not exceed 0.1% by weight in homogeneous materials. Where designed to be soldered at high temperatures, "RoHS" products are suitable for use in specified lead-free processes. TI may reference these types of products as "Pb-Free".
RoHS Exempt: TI defines "RoHS Exempt" to mean products that contain lead but are compliant with EU RoHS pursuant to a specific EU RoHS exemption.
Green: TI defines "Green" to mean the content of Chlorine (Cl) and Bromine (Br) based flame retardants meet JS709B low halogen requirements of <=1000ppm threshold. Antimony trioxide based flame retardants must also meet the <=1000ppm threshold requirement.

(3) MSL, Peak Temp. - The Moisture Sensitivity Level rating according to the JEDEC industry standard classifications, and peak solder temperature.

(4) There may be additional marking, which relates to the logo, the lot trace code information, or the environmental category on the device.

(5) Multiple Device Markings will be inside parentheses. Only one Device Marking contained in parentheses and separated by a "~" will appear on a device. If a line is indented then it is a continuation of the previous line and the two combined represent the entire Device Marking for that device.

(6) Lead finish/Ball material - Orderable Devices may have multiple material finish options. Finish options are separated by a vertical ruled line. Lead finish/Ball material values may wrap to two lines if the finish value exceeds the maximum column width.

Important Information and Disclaimer: The information provided on this page represents TI's knowledge and belief as of the date that it is provided. TI bases its knowledge and belief on information provided by third parties, and makes no representation or warranty as to the accuracy of such information. Efforts are underway to better integrate information from third parties. TI has taken and continues to take reasonable steps to provide representative and accurate information but may not have conducted destructive testing or chemical analysis on incoming materials and chemicals. TI and TI suppliers consider certain information to be proprietary, and thus CAS numbers and other limited information may not be available for release.

In no event shall TI's liability arising out of such information exceed the total purchase price of the TI part(s) at issue in this document sold by TI to Customer on an annual basis.

TAPE AND REEL INFORMATION

REEL DIMENSIONS

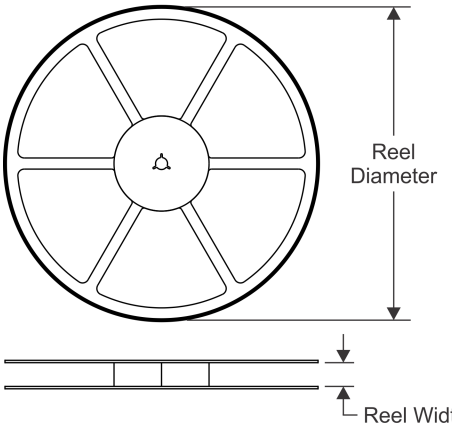

TAPE DIMENSIONS

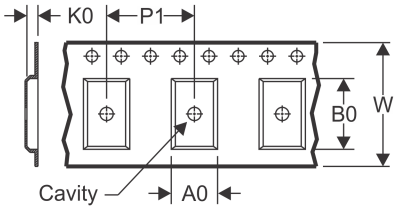

A0	Dimension designed to accommodate the component width
B0	Dimension designed to accommodate the component length
K0	Dimension designed to accommodate the component thickness
W	Overall width of the carrier tape
P1	Pitch between successive cavity centers

QUADRANT ASSIGNMENTS FOR PIN 1 ORIENTATION IN TAPE

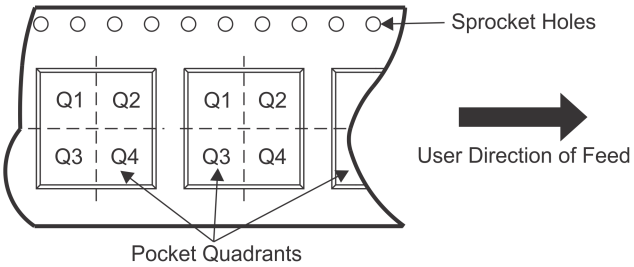

*All dimensions are nominal

Device	Package Type	Package Drawing	Pins	SPQ	Reel Diameter (mm)	Reel Width W1 (mm)	A0 (mm)	B0 (mm)	K0 (mm)	P1 (mm)	W (mm)	Pin1 Quadrant
MSP430FW423IPMR	LQFP	PM	64	1000	330.0	24.4	13.0	13.0	2.1	16.0	24.0	Q2
MSP430FW425IPMR	LQFP	PM	64	1000	330.0	24.4	13.0	13.0	2.1	16.0	24.0	Q2
MSP430FW427IPMR	LQFP	PM	64	1000	330.0	24.4	13.0	13.0	2.1	16.0	24.0	Q2
MSP430FW428IPMR	LQFP	PM	64	1000	330.0	24.4	13.0	13.0	2.1	16.0	24.0	Q2
MSP430FW429IPMR	LQFP	PM	64	1000	330.0	24.4	13.0	13.0	2.1	16.0	24.0	Q2

TAPE AND REEL BOX DIMENSIONS

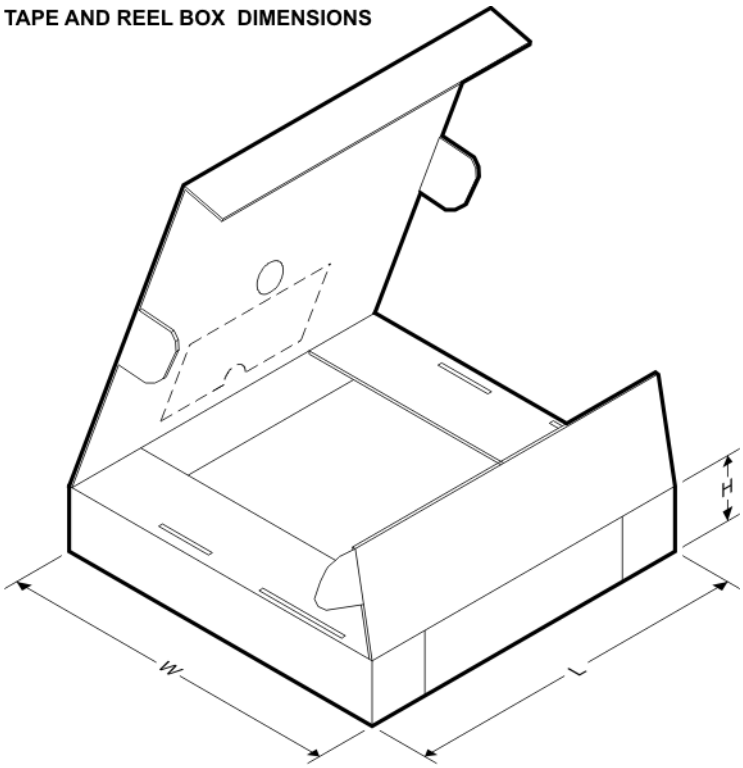

*All dimensions are nominal

Device	Package Type	Package Drawing	Pins	SPQ	Length (mm)	Width (mm)	Height (mm)
MSP430FW423IPMR	LQFP	PM	64	1000	336.6	336.6	41.3
MSP430FW425IPMR	LQFP	PM	64	1000	336.6	336.6	41.3
MSP430FW427IPMR	LQFP	PM	64	1000	336.6	336.6	41.3
MSP430FW428IPMR	LQFP	PM	64	1000	336.6	336.6	41.3
MSP430FW429IPMR	LQFP	PM	64	1000	336.6	336.6	41.3

TRAY

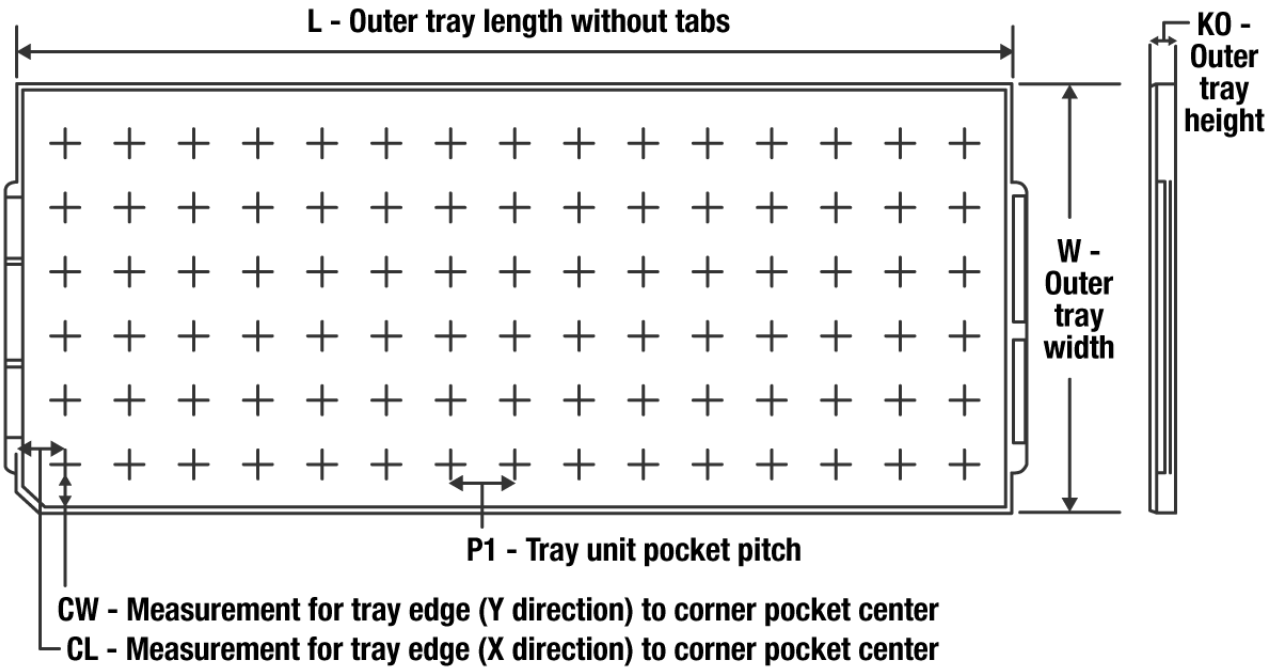

Chamfer on Tray corner indicates Pin 1 orientation of packed units.

*All dimensions are nominal

Device	Package Name	Package Type	Pins	SPQ	Unit array matrix	Max temperature (°C)	L (mm)	W (mm)	K0 (µm)	P1 (mm)	CL (mm)	CW (mm)
MSP430FW423IPM	PM	LQFP	64	160	8 X 20	150	315	135.9	7620	15.2	13.1	13
MSP430FW423IPM	PM	LQFP	64	160	8 x 20	150	315	135.9	7620	15.2	13.1	13
MSP430FW427IPM	PM	LQFP	64	160	8 x 20	150	315	135.9	7620	15.2	13.1	13
MSP430FW427IPM	PM	LQFP	64	160	8 X 20	150	315	135.9	7620	15.2	13.1	13

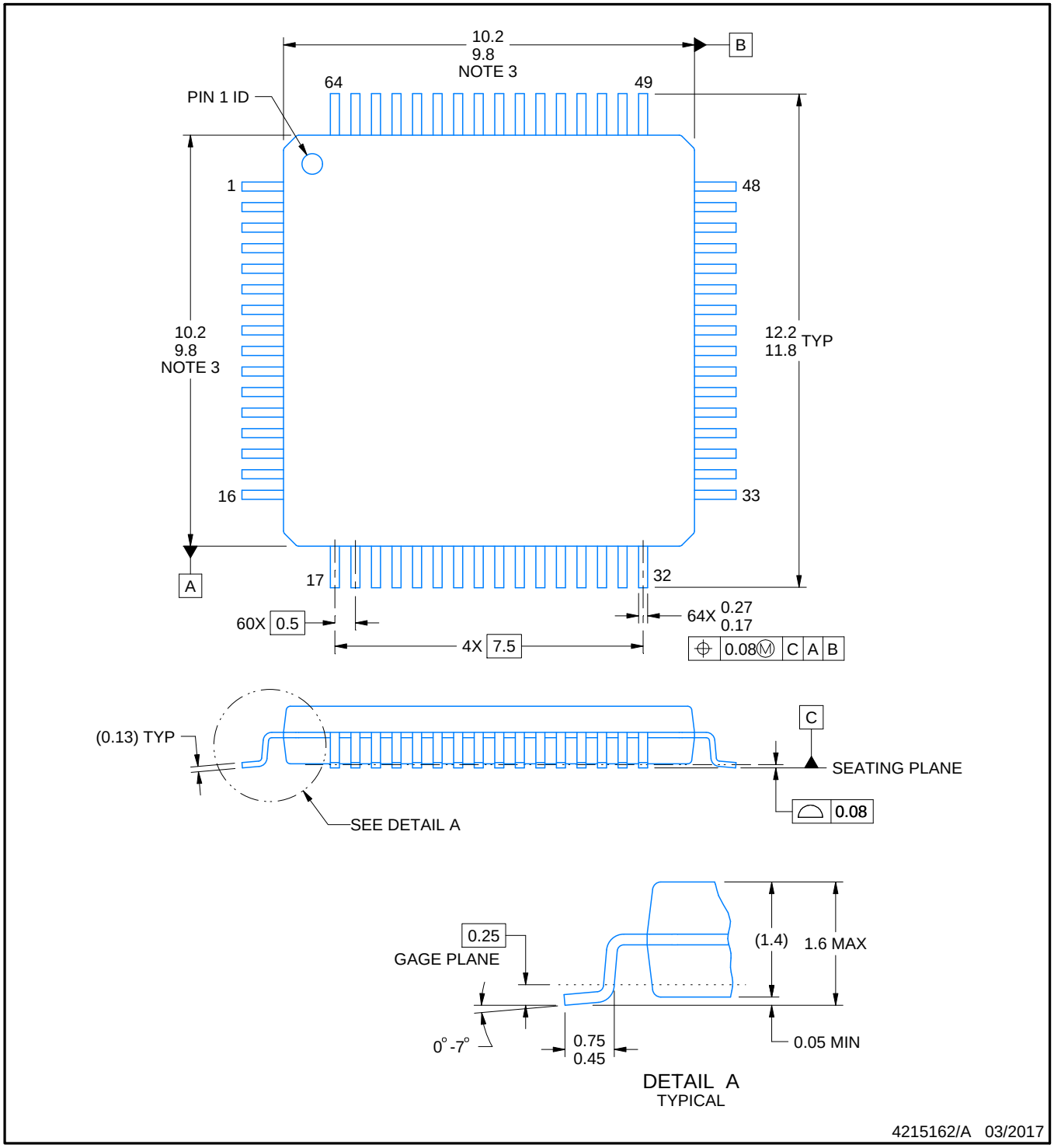

NOTES:

1. All linear dimensions are in millimeters. Any dimensions in parenthesis are for reference only. Dimensioning and tolerancing per ASME Y14.5M.
2. This drawing is subject to change without notice.
3. This dimension does not include mold flash, protrusions, or gate burrs. Mold flash, protrusions, or gate burrs shall not exceed 0.15 mm per side.
4. Reference JEDEC registration MS-026.

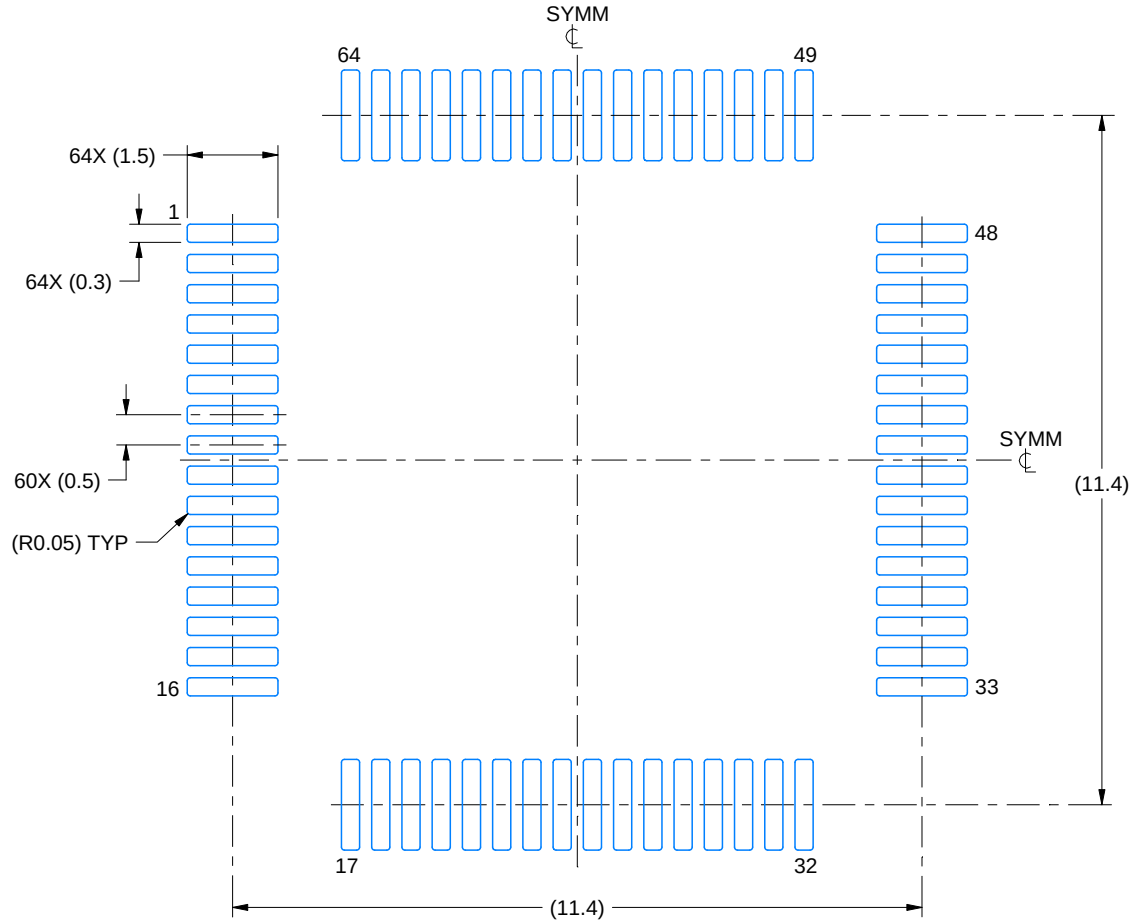

LAND PATTERN EXAMPLE
EXPOSED METAL SHOWN
SCALE:8X

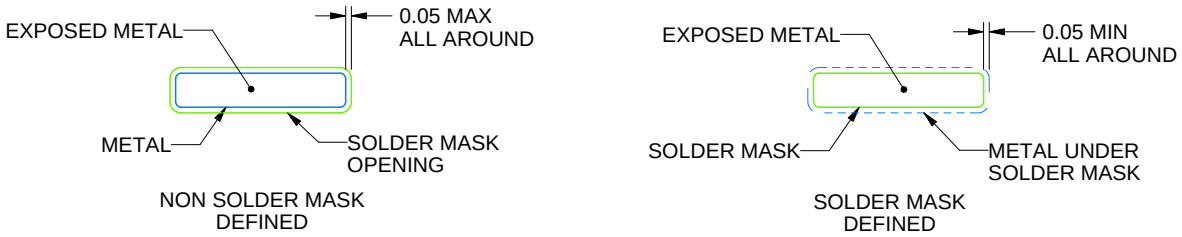

SOLDER MASK DETAILS

4215162/A 03/2017

NOTES: (continued)

5. Publication IPC-7351 may have alternate designs.
6. Solder mask tolerances between and around signal pads can vary based on board fabrication site.
7. For more information, see Texas Instruments literature number SLMA004 (www.ti.com/lit/slma004).

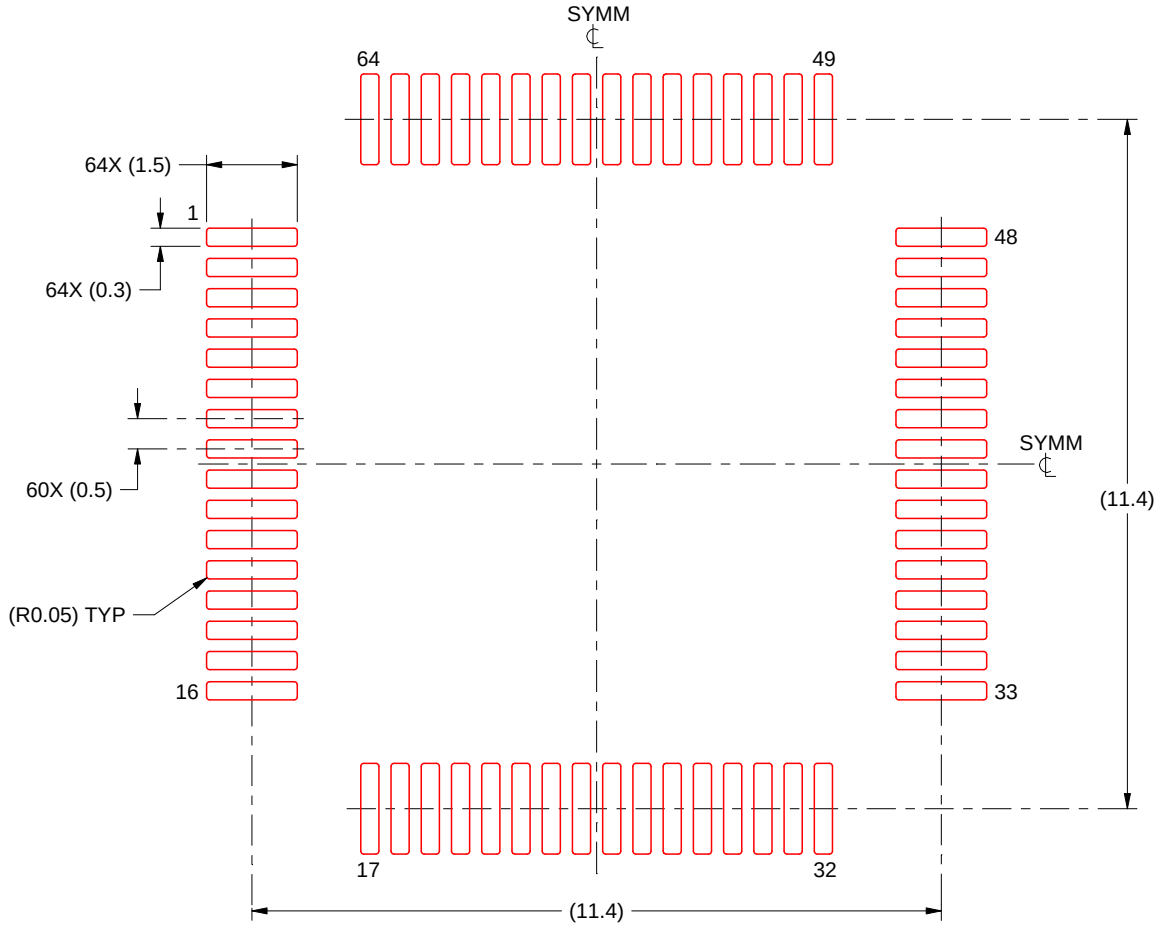

SOLDER PASTE EXAMPLE
BASED ON 0.125 mm THICK STENCIL
SCALE:8X

4215162/A 03/2017

NOTES: (continued)

8. Laser cutting apertures with trapezoidal walls and rounded corners may offer better paste release. IPC-7525 may have alternate design recommendations.
9. Board assembly site may have different recommendations for stencil design.

IMPORTANT NOTICE AND DISCLAIMER

TI PROVIDES TECHNICAL AND RELIABILITY DATA (INCLUDING DATA SHEETS), DESIGN RESOURCES (INCLUDING REFERENCE DESIGNS), APPLICATION OR OTHER DESIGN ADVICE, WEB TOOLS, SAFETY INFORMATION, AND OTHER RESOURCES “AS IS” AND WITH ALL FAULTS, AND DISCLAIMS ALL WARRANTIES, EXPRESS AND IMPLIED, INCLUDING WITHOUT LIMITATION ANY IMPLIED WARRANTIES OF MERCHANTABILITY, FITNESS FOR A PARTICULAR PURPOSE OR NON-INFRINGEMENT OF THIRD PARTY INTELLECTUAL PROPERTY RIGHTS.

These resources are intended for skilled developers designing with TI products. You are solely responsible for (1) selecting the appropriate TI products for your application, (2) designing, validating and testing your application, and (3) ensuring your application meets applicable standards, and any other safety, security, regulatory or other requirements.

These resources are subject to change without notice. TI grants you permission to use these resources only for development of an application that uses the TI products described in the resource. Other reproduction and display of these resources is prohibited. No license is granted to any other TI intellectual property right or to any third party intellectual property right. TI disclaims responsibility for, and you will fully indemnify TI and its representatives against, any claims, damages, costs, losses, and liabilities arising out of your use of these resources.

TI’s products are provided subject to TI’s Terms of Sale or other applicable terms available either on ti.com or provided in conjunction with such TI products. TI’s provision of these resources does not expand or otherwise alter TI’s applicable warranties or warranty disclaimers for TI products.

TI objects to and rejects any additional or different terms you may have proposed.

Mailing Address: Texas Instruments, Post Office Box 655303, Dallas, Texas 75265
Copyright © 2022, Texas Instruments Incorporated