具有关断功能的 OPAx355 200MHz CMOS 运算放大器

1 特性

- 单位增益带宽：450MHz
- 宽带宽：200MHz GBW
- 低噪声：5.8nV/√Hz
- 出色的视频性能
  - 差分增益：0.02%
  - 差分相位：0.05°
  - 0.1dB 增益平坦度：75MHz
- 输入范围包括接地
- 轨至轨输出（在 100mV 以内）
- 低输入偏置电流：3pA
- 低关断电流：3.4μA
- 启用和禁用时间：100ns 和 30ns
- 热关断
- 单电源工作电压范围：2.5V 至 5.5V
- *Micro*SIZE 封装

2 应用

- 视频处理
- 超声波
- 光网络、可调激光器
- 光电二极管互阻放大器
- 有源滤波器
- 高速积分器
- 模数转换器 (ADC) 输入缓冲器
- 数模转换器 (DAC) 输出放大器
- 条形码扫描器
- 通信

3 说明

OPA355 系列高速电压反馈 CMOS 运算放大器专为视频应用和其他需要宽带宽的 应用 而设计。OPA355 系列器件具有单位增益稳定性，且可驱动大输出电流。此外，OPAx355 系列还具备数字关断（启用）功能。这个特性在空闲期间提供节电功能，并将输出置于高阻抗状态，以支持输出复用。差分增益为 0.02%，而差分相位为 0.05°。每通道的静态电流为 8.3mA。

OPAx355 针对低至 2.5V (±1.25V) 和高达 5.5V (±2.75V) 的单电源或双电源供电运行进行了优化。OPAx355 系列器件的共模输入范围的下限可扩展至低于接地电压 100mV，上限可扩展至高于 V+ 1.5V。电源轨的输出摆幅在 100mV 以内，从而支持宽动态范围。

OPAx355 系列提供单通道（SOT-23-6 和 SO-8）、双通道 (VSSOP-10) 和 三通道（TSSOP-14 和 SO-14）三种版本。多通道版本具有完全独立的电路，可将串扰降到最低并彻底消除相互干扰。所有封装的额定工作温度范围均为 –40°C 至 +125°C。

器件信息(1)

器件型号	封装	封装尺寸（标称值）
OPA355	SOIC (8)	4.90mm × 3.91mm
	SOT-23 (6)	2.90mm × 1.60mm
OPA2355	VSSOP (10)	3.00mm × 3.00mm
OPA3355	SOIC (14)	8.65mm × 3.91mm
	TSSOP (14)	5.00mm × 4.40mm

(1) 如需了解所有可用封装，请参阅产品说明书末尾的可订购产品附录。

简化原理图

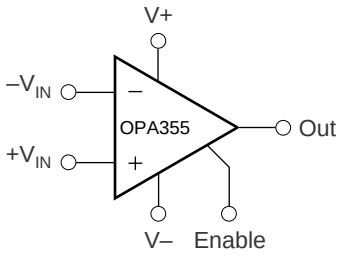

An IMPORTANT NOTICE at the end of this data sheet addresses availability, warranty, changes, use in safety-critical applications, intellectual property matters and other important disclaimers. PRODUCTION DATA.

目录

1 特性 ... 1
2 应用 ... 1
3 说明 ... 1
4 修订历史记录 ... 2
5 **Device Comparison Table** ... 3
6 **Pin Configuration and Functions** ... 4
7 **Specifications** ... 7
7.1 Absolute Maximum Ratings ... 7
7.2 ESD Ratings ... 7
7.3 Recommended Operating Conditions ... 7
7.4 Thermal Information: OPA355 ... 8
7.5 Thermal Information: OPA2355 ... 8
7.6 Thermal Information: OPA3355 ... 8
7.7 Electrical Characteristics: V_S = 2.7 V to 5.5 V (Single-Supply) ... 9
7.8 Typical Characteristics ... 11
8 **Detailed Description** ... 16
8.1 Overview ... 16
8.2 Functional Block Diagram ... 16
8.3 Feature Description ... 16
8.4 Device Functional Modes ... 17
9 **Application and Implementation** ... 18
9.1 Application Information ... 18
9.2 Typical Applications ... 18
9.3 Video ... 22
9.4 Wideband Video Multiplexing ... 23
10 **Power Supply Recommendations** ... 25
11 **Layout** ... 25
11.1 Layout Guidelines ... 25
11.2 Layout Example ... 25
12 器件和文档支持 ... 26
12.1 相关链接 ... 26
12.2 接收文档更新通知 ... 26
12.3 社区资源 ... 26
12.4 商标 ... 26
12.5 静电放电警告 ... 26
12.6 术语表 ... 26
13 机械、封装和可订购信息 ... 27

4 修订历史记录

注：之前版本的页码可能与当前版本有所不同。

Changes from Revision D (January 2004) to Revision E — **Page**

- 根据最新 TIS 文档和翻译标准更新了产品数据表 ... 1
- 已更改 已在*说明*部分中将引脚类型拼写错误由 MSOP 更改为 VSSOP ... 1
- 已添加 *器件信息* 表 ... 1
- Deleted the *Absolute Maximum Ratings* table note: Input terminals are diode-clamped to the power-supply rails. Input signals that can swing more than 0.5 V beyond the supply rails should be current limited to 10 mA or less. ... 7
- Added *ESD Ratings* table ... 7
- Added *Recommended Operating Conditions* table ... 7
- Added *Thermal Information* tables ... 8
- Changed pin type typo from MSOP to VSSOP in *Electrical Characteristics* section ... 10
- 已删除 the test conditions statement from *Typical Characteristics* graphs and moved the conditions to tablenotes below the graphs ... 11
- 已添加 *Detailed Description* section ... 16
- 已添加 *Functional Block Diagram* graphic ... 16
- 已删除 *Input and ESD Protection* section ... 16
- 已添加 *Application and Implementation* section ... 18
- 已删除 *Internal ESD Protection* application ... 18
- 已添加 *Power Supply Recommendations* section ... 25
- 已添加 *Layout Guidelines* section ... 25

Copyright © 2001–2018, Texas Instruments Incorporated

5 Device Comparison Table

OPAx355 RELATED PRODUCTS	FEATURES
OPA356	200-MHz, Rail-to-Rail Output, CMOS, No Shutdown
OPAx350	38-MHz, Rail-to-Rail Input and Output, CMOS
OPAx631	75-MHz, Rail-to-Rail Output
OPAx634	150-MHz, Rail-to-Rail Output
THS412x	Differential Input and Output, 3.3-V Supply

Copyright © 2001–2018, Texas Instruments Incorporated

6 Pin Configuration and Functions

OPA355 DBV Package
6-Pin SOT-23
Top View

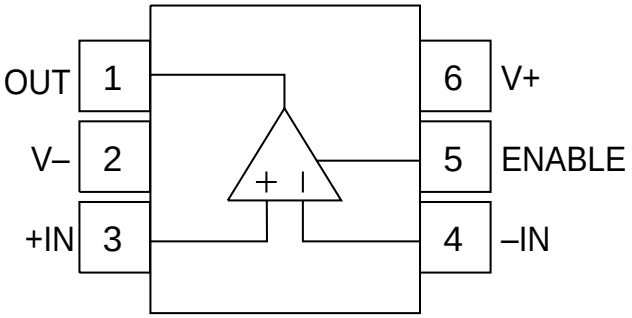

(1) Pin 1 of the SOT-23-6 is determined by orienting the package marking as indicated in the diagram.

OPA355 D Package
8-Pin SOIC
Top View

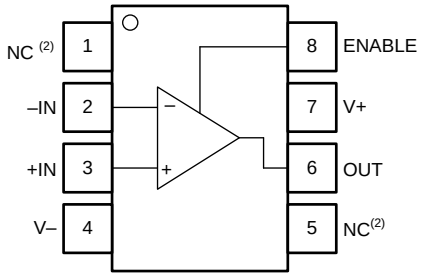

(1) Pin 1 of the SOT-23-6 is determined by orienting the package marking as indicated in the diagram.

(2) NC - no internal connection

Pin Functions: OPA355

PIN			I/O	DESCRIPTION
NAME	SOT-23	SOIC		
ENABLE	5	8	—	Amplifier power down. Low = disabled, high = normal operation (pin must be driven)
IN+	3	3	I	Noninverting input pin
IN–	4	2	I	Inverting input pin
NC	—	1,5	—	Do not connect.
OUT	1	6	O	Output pin
V+	6	7	—	Positive power supply
V–	2	4	—	Negative power supply

Copyright © 2001–2018, Texas Instruments Incorporated

OPA2355 DGS Package
10-Pin VSSOP
Top View

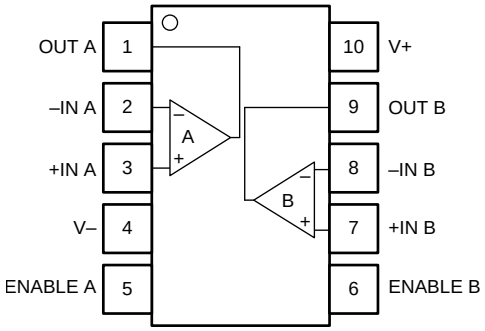

Pin Functions: OPA2355

PIN		I/O	DESCRIPTION
NAME	NO.		
ENABLE A	5	—	Amplifier power down, channel A. Low = disabled, high = normal operation (pin must be driven)
ENABLE B	6	—	Amplifier power down, channel B. Low = disabled, high = normal operation (pin must be driven)
+IN A	3	I	Noninverting input pin, channel A
+IN B	7	I	Noninverting input pin, channel B
–IN A	2	I	Inverting input pin, channel A
–IN B	8	I	Inverting input pin, channel B
OUT A	1	O	Output pin, channel A
OUT B	9	O	Output pin, channel B
V+	10	—	Positive power supply
V–	4	—	Negative power supply

Copyright © 2001–2018, Texas Instruments Incorporated

OPA3355 D and PW Packages
14-Pin SOIC, TSSOP
Top View

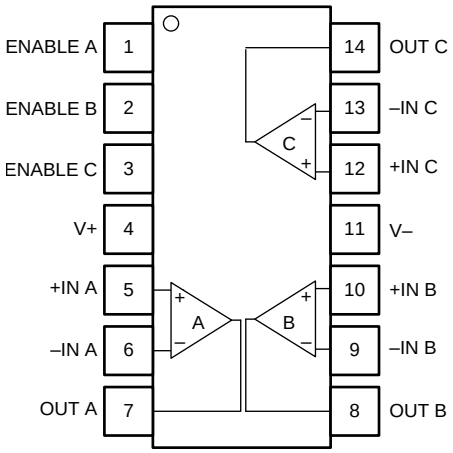

Pin Functions: OPA3355

PIN		I/O	DESCRIPTION
NAME	NO.		
ENABLE A	1	—	Amplifier power down, channel A. Low = disabled, high = normal operation (pin must be driven)
ENABLE B	2	—	Amplifier power down, channel B. Low = disabled, high = normal operation (pin must be driven)
ENABLE C	3	—	Amplifier power down, channel C. Low = disabled, high = normal operation (pin must be driven)
+IN A	5	I	Noninverting input pin, channel A
+IN B	10	I	Noninverting input pin, channel B
+IN C	12	I	Noninverting input pin, channel C
–IN A	6	I	Inverting input pin, channel A
–IN B	9	I	Inverting input pin, channel B
–IN C	13	I	Inverting input pin, channel C
OUT A	7	O	Output, channel A
OUT B	8	O	Output channel B
OUT C	14	O	Output, channel C
V+	4	—	Positive power supply
V–	11	—	Negative power supply

Copyright © 2001–2018, Texas Instruments Incorporated

7 Specifications

7.1 Absolute Maximum Ratings

over operating free-air temperature range (unless otherwise noted)[1]

		MIN	MAX	UNIT
Supply voltage	V+ to V–		7.5	V
Signal input terminals	Voltage	(V–) – 0.5	(V+) + 0.5	V
	Current		10	mA
Output short circuit[2]		Continuous		
Operating temperature		–55	150	°C
Junction temperature			160	°C
Lead temperature (soldering, 10 seconds)			300	°C
Storage temperature range, T_{stg}		–65	150	°C

(1) Stresses above *Absolute Maximum Ratings* may cause permanent damage. Exposure to absolute maximum conditions for extended periods may degrade device reliability. These are stress ratings only, and functional operation of the device at these or any other conditions beyond those specified is not implied.
(2) Short-circuit to ground, one amplifier per package.

7.2 ESD Ratings

		VALUE	UNIT
$V_{(ESD)}$ Electrostatic discharge	Human-body model (HBM), per ANSI/ESDA/JEDEC JS-001[1]	±2000	V
	Charged-device model (CDM), per JEDEC specification JESD22-C101[2]	±250	

(1) JEDEC document JEP155 states that 500-V HBM allows safe manufacturing with a standard ESD control process. Manufacturing with less than 500-V HBM is possible with the necessary precautions. Pins listed as ±2000 V may actually have higher performance.
(2) JEDEC document JEP157 states that 250-V CDM allows safe manufacturing with a standard ESD control process. Manufacturing with less than 250-V CDM is possible with the necessary precautions. Pins listed as ±250 V may actually have higher performance.

7.3 Recommended Operating Conditions

over operating free-air temperature range (unless otherwise noted)

	MIN	NOM	MAX	UNIT
V_S Total supply voltage	2.7		5.5	V
T_A Ambient temperature	–40	25	125	°C

Copyright © 2001–2018, Texas Instruments Incorporated

7.4 Thermal Information: OPA355

THERMAL METRIC[1]		OPA355		UNIT
		D (SOIC)	DBV (SOT-23)	
		8 PINS	6 PINS	
$R_{\theta JA}$	Junction-to-ambient thermal resistance	136.3	166.1	°C/W
$R_{\theta JC(top)}$	Junction-to-case (top) thermal resistance	76.7	104.3	°C/W
$R_{\theta JB}$	Junction-to-board thermal resistance	79.8	38.7	°C/W
ψ_{JT}	Junction-to-top characterization parameter	26.3	23.4	°C/W
ψ_{JB}	Junction-to-board characterization parameter	79	38.5	°C/W
$R_{\theta JC(bot)}$	Junction-to-case (bottom) thermal resistance	—	—	°C/W

(1) For more information about traditional and new thermal metrics, see the Semiconductor and IC Package Thermal Metrics application report.

7.5 Thermal Information: OPA2355

THERMAL METRIC[1]		OPA2355	UNIT
		DGS (VSSOP)	
		10 PINS	
$R_{\theta JA}$	Junction-to-ambient thermal resistance	171.1	°C/W
$R_{\theta JC(top)}$	Junction-to-case (top) thermal resistance	58	°C/W
$R_{\theta JB}$	Junction-to-board thermal resistance	92.9	°C/W
ψ_{JT}	Junction-to-top characterization parameter	6.7	°C/W
ψ_{JB}	Junction-to-board characterization parameter	91.2	°C/W
$R_{\theta JC(bot)}$	Junction-to-case (bottom) thermal resistance	—	°C/W

(1) For more information about traditional and new thermal metrics, see the Semiconductor and IC Package Thermal Metrics application report.

7.6 Thermal Information: OPA3355

THERMAL METRIC[1]		OPA3355		UNIT
		D (SOIC)	PW (TSSOP)	
		14 PINS	14 PINS	
$R_{\theta JA}$	Junction-to-ambient thermal resistance	85.3	113.3	°C/W
$R_{\theta JC(top)}$	Junction-to-case (top) thermal resistance	41.4	38	°C/W
$R_{\theta JB}$	Junction-to-board thermal resistance	41.5	58.1	°C/W
ψ_{JT}	Junction-to-top characterization parameter	8.3	2.8	°C/W
ψ_{JB}	Junction-to-board characterization parameter	41.2	57.3	°C/W
$R_{\theta JC(bot)}$	Junction-to-case (bottom) thermal resistance	—	—	°C/W

(1) For more information about traditional and new thermal metrics, see the *Semiconductor and IC Package Thermal Metrics* application report.

Copyright © 2001–2018, Texas Instruments Incorporated

7.7 Electrical Characteristics: V_S = 2.7 V to 5.5 V (Single-Supply)

at T_A = 25°C, R_F = 604 Ω, R_L = 150 Ω, and connected to V_S / 2, (unless otherwise noted)

PARAMETER		TEST CONDITIONS	MIN	TYP	MAX	UNIT
OFFSET VOLTAGE						
V_{OS}	Input offset voltage	V_S = 5 V		±2	±9	mV
		T_A = –40°C to +125°C			±15	
dV_{OS}/dT	Input offset voltage vs temperature	T_A = –40°C to +125°C		±7		µV/°C
	Input offset voltage vs power supply			±80	±350	µV/V
INPUT BIAS CURRENT						
I_B	Input bias current			3	±50	pA
I_{OS}	Input offset current			±1	±50	pA
NOISE						
	Input noise voltage density	f = 1 MHz		5.8		nV/√Hz
	Current noise density	f = 1 MHz		50		fA/√Hz
INPUT VOLTAGE RANGE						
V_{CM}	Common-mode voltage range		(V–) – 0.1		(V+) – 1.5	V
CMRR	Common-mode rejection ratio	V_S = 5.5 V, –0.1 V < V_{CM} < 4 V	66	80		dB
		V_S = 5.5 V, –0.1 V < V_{CM} < 4 V T_A = –40°C to +125°C	66			dB
INPUT IMPEDANCE						
	Differential			10^{13} || 1.5		Ω || pF
	Common-mode			10^{13} || 1.5		Ω || pF
OPEN-LOOP GAIN						
	Open-loop gain	V_S = 5 V, 0.3 V < V_O < 4.7 V	84	92		dB
		OPA355: V_S = 5 V, 0.3 V < V_O < 4.7 V T_A = –40°C to +125°C	80			dB
		OPA2355, OPA3355: V_S = 5 V, 0.4 V < V_O < 4.6 V	80			dB
FREQUENCY RESPONSE						
$f_{–3dB}$	Small-signal bandwidth	G = 1, V_O = 100 mVp-p, R_F = 0 Ω		450		MHz
		G = 2, V_O = 100 mVp-p, R_L = 50 Ω		100		MHz
		G = 2, V_O = 100 mVp-p, R_L = 150 Ω		170		MHz
		G = 2, V_O = 100 mVp-p, R_L = 1 kΩ		200		MHz
GBW	Gain-bandwidth product	G = 10, R_L = 1 kΩ		200		MHz
$f_{0.1dB}$	Bandwidth for 0.1-dB gain flatness	G = 2, V_O = 100 mVp-p, R_F = 560 Ω		75		MHz
SR	Slew rate	V_S = 5 V, G = 2, 4-V output step		300 / –360		V/µs
	Rise and fall time	G = 2, V_O = 200 Vp-p, 10% to 90%		2.4		ns
		G = 2, V_O = 2 Vp-p, 10% to 90%		8		ns
	Settling time	0.1%: V_S = 5 V, G = 2, 2-V output step		30		ns
		0.01%: V_S = 5 V, G = 2, 2-V output step		120		ns
	Overload recovery time	V_{IN} × gain = V_S		8		ns
HARMONIC DISTORTION						
	Second harmonic	G = 2, f = 1 MHz, V_O = 2 Vp-p, R_L = 200 Ω		–81		dBc
	Third harmonic	G = 2, f = 1 MHz, V_O = 2 Vp-p, R_L = 200 Ω		–93		dBc
	Differential gain error	NTSC, R_L = 150 Ω		0.02		%

Copyright © 2001–2018, Texas Instruments Incorporated

Electrical Characteristics: V_S = 2.7 V to 5.5 V (Single-Supply) (continued)

at T_A = 25°C, R_F = 604 Ω, R_L = 150 Ω, and connected to V_S / 2, (unless otherwise noted)

PARAMETER		TEST CONDITIONS	MIN	TYP	MAX	UNIT
	Differential phase error	NTSC, R_L = 150 Ω		0.05		°
	Channel-to-channel crosstalk	OPA2355: f = 5 MHz		–90		dB
		OPA3335: f = 5 MHz		–70		dB
OUTPUT						
	Voltage output swing from rail	V_S = 5 V, R_L = 150 Ω, A_{OL} > 84 dB		0.2	0.3	V
		V_S = 5 V, RL = 1 kΩ		0.1		V
I_O	Continuous output current (1)			±60		mA
	Peak output current (1)	V_S = 5 V		±100		mA
		V_S = 3 V		±80		mA
	Closed-loop output impedance (1)	f < 100 kHz		0.02		Ω
POWER SUPPLY						
V_S	Specified voltage range		2.7		5.5	V
	Operating voltage range			2.5 to 5.5		V
I_Q	Quiescent current (per amplifier)	VS = 5 V, enabled, I_O = 0		8.3	11	mA
		T_A = –40°C to +125°C			14	mA
SHUTDOWN						
	Disabled (logic-LOW threshold)				0.8	V
	Enabled (logic-HIGH threshold)		2			V
	Enable time			100		ns
	Disable time			30		ns
	Shutdown current (per amplifier)	V_S = 5 V, disabled		3.4	6	µA
THERMAL SHUTDOWN						
	Junction temperature	Shutdown		160		°C
		Reset from shutdown		140		
TEMPERATURE RANGE						
	Specified range		–40		125	°C
	Operating range		–55		150	°C
	Storage range		–65		150	°C
θ_{JA}	Thermal resistance	SOT-23-6, VSSOP-10		150		°C/W
		SO-8		125		°C/W
		SO-14, TSSOP-14		100		°C/W

(1) See *Output Voltage Swing vs Output Current*.

版权 © 2001–2018, Texas Instruments Incorporated

7.8 Typical Characteristics

T_A = 25°C, V_S = 5 V, G = 2, R_F = 604 Ω, and R_L = 150 Ω connected to V_S / 2, (unless otherwise noted)

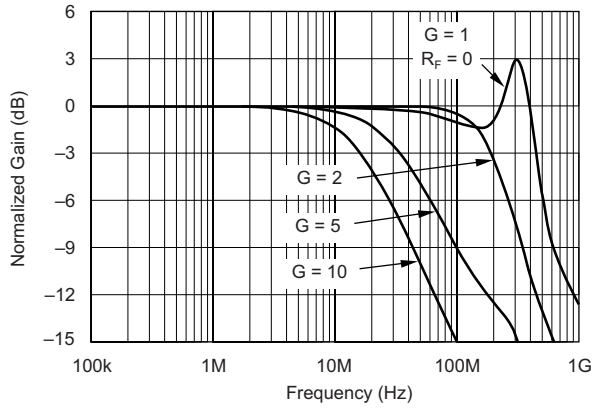

V_O = 0.1 V_{P-P}

图 1. Noninverting Small-Signal Frequency Response

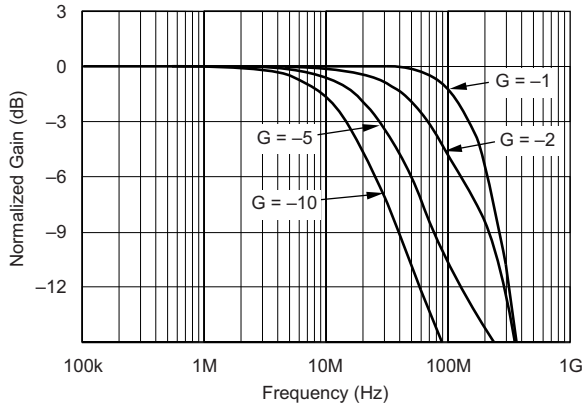

V_O = 0.1 V_{P-P}

图 2. Inverting Small-Signal Frequency Response

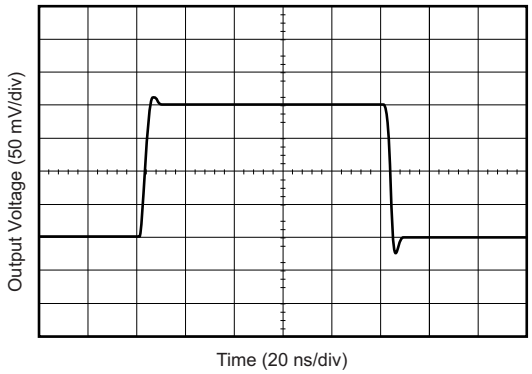

G = 2

图 3. Noninverting Small-Signal Step Response

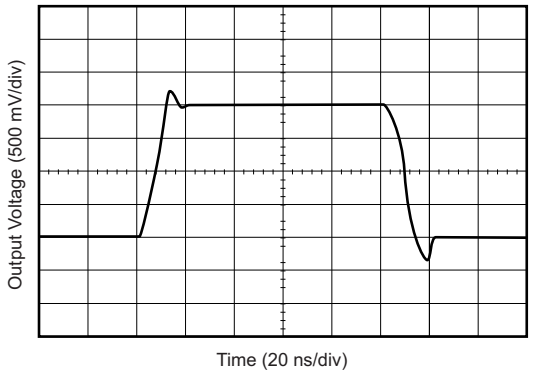

G = 2

图 4. Noninverting Large-Signal Step Response

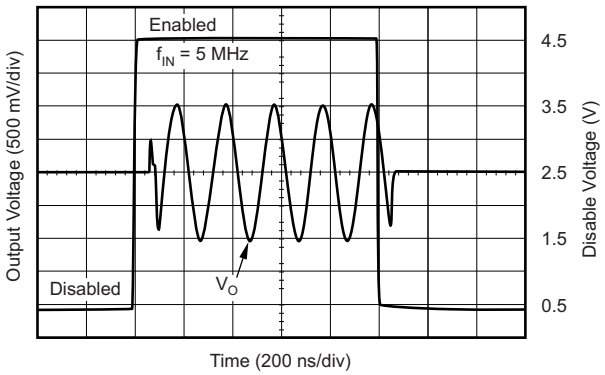

图 5. Large-Signal Disable and Enable Response

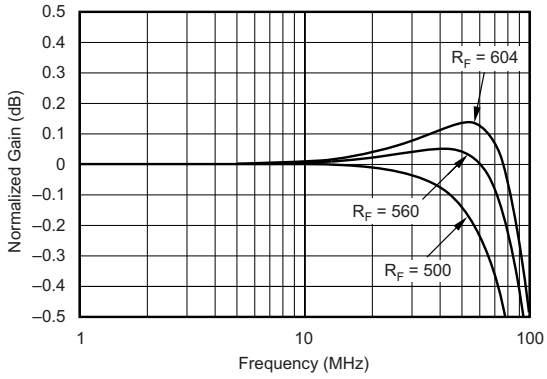

C_L = 0 pF V_O = 0.1 V_{P-P}

图 6. 0.1-dB Gain Flatness for Various R_F Values

Typical Characteristics (接下页)

T_A = 25°C, V_S = 5 V, G = 2, R_F = 604 Ω, and R_L = 150 Ω connected to V_S / 2, (unless otherwise noted)

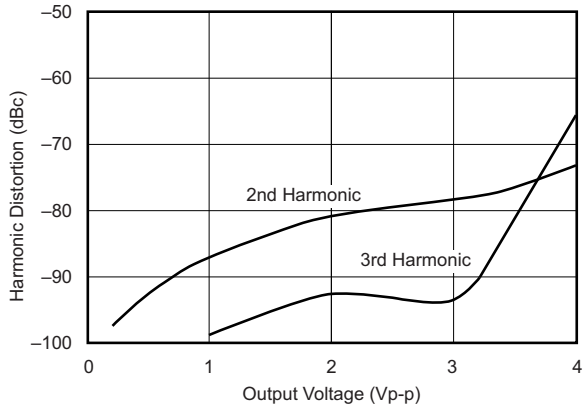

R_L = 200 f = 1 MHz

图 7. Harmonic Distortion vs Output Voltage

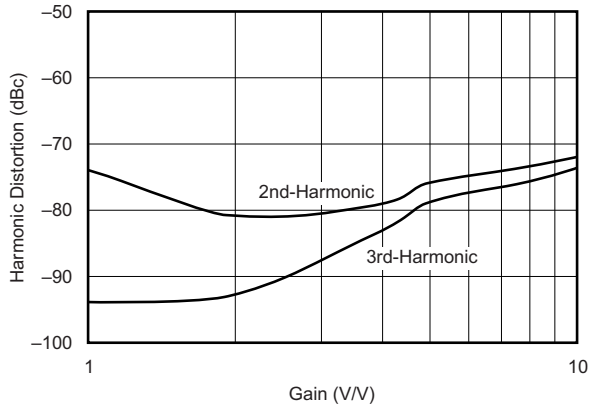

R_L = 200 V_O = 2 V_{P-P} f = 1 MHz

图 8. Harmonic Distortion vs Noninverting Gain

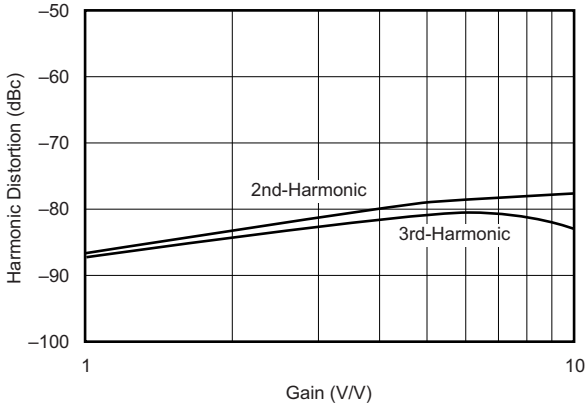

R_L = 200 V_O = 2 V_{P-P} f = 1 MHz

图 9. Harmonic Distortion vs Inverting Gain

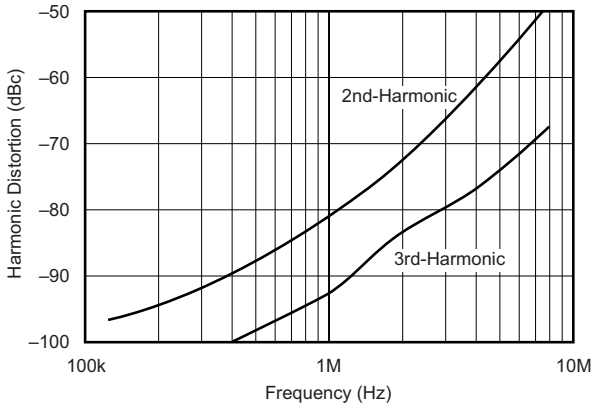

R_L = 200 V_O = 2 V_{P-P}

图 10. Harmonic Distortion vs Frequency

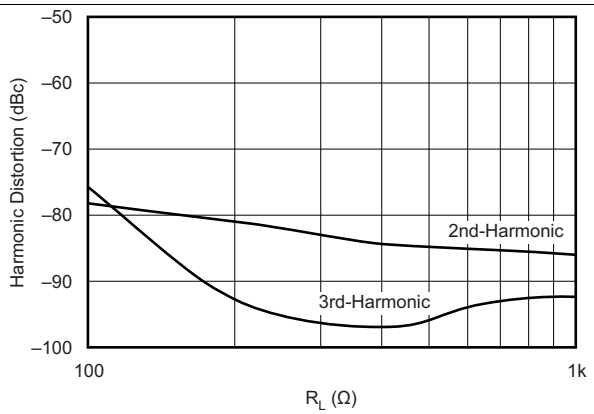

f = 1 MHz V_O = 2 V_{P-P}

图 11. Harmonic Distortion vs Load Resistance

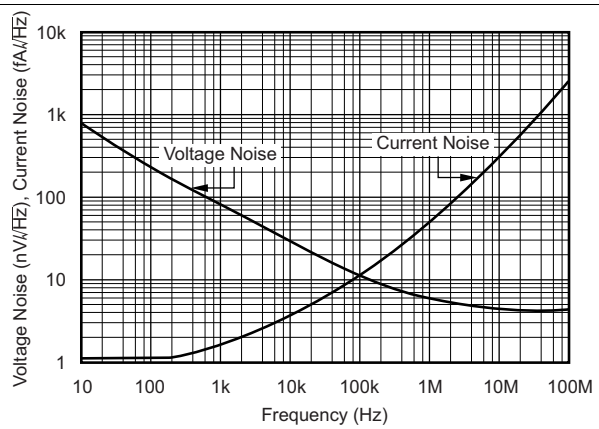

图 12. Input Voltage and Current Noise Spectral Density vs Frequency

版权 © 2001–2018, Texas Instruments Incorporated

Typical Characteristics (接下页)

T_A = 25°C, V_S = 5 V, G = 2, R_F = 604 Ω, and R_L = 150 Ω connected to V_S / 2, (unless otherwise noted)

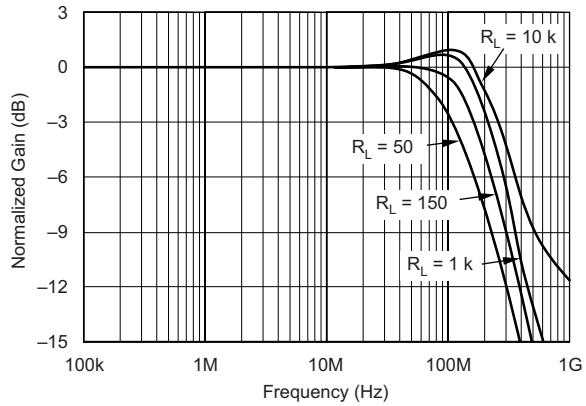

C_L = 0 pF V_O = 0.1 V_{P-P}

图 13. Frequency Response for Various R_L Values

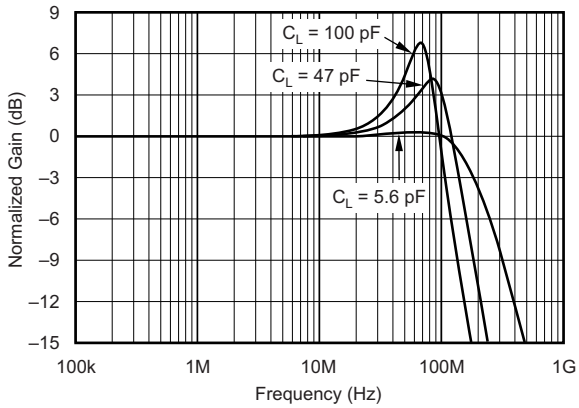

R_S = 0 V_O = 0.1 V_{P-P}

图 14. Frequency Response for Various C_L Values

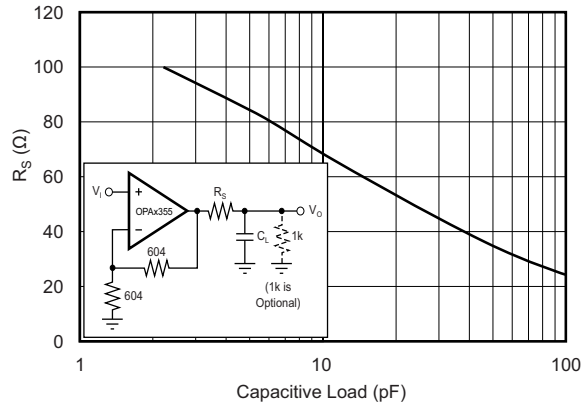

图 15. Recommended R_S Values vs Capacitive Load

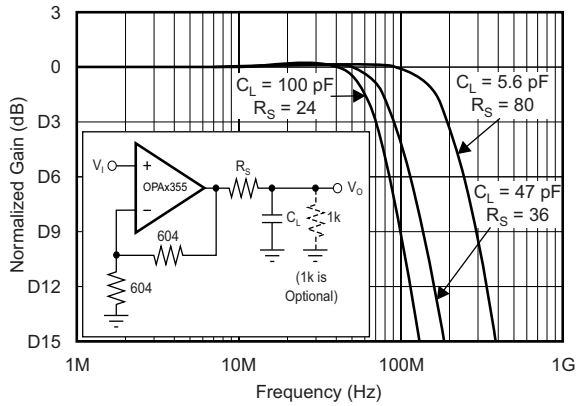

图 16. Frequency Response vs Capacitive Load

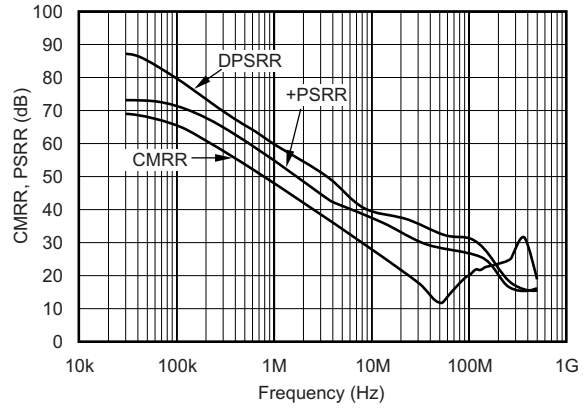

图 17. Common-Mode Rejection Ratio and Power-Supply Rejection Ratio vs Frequency

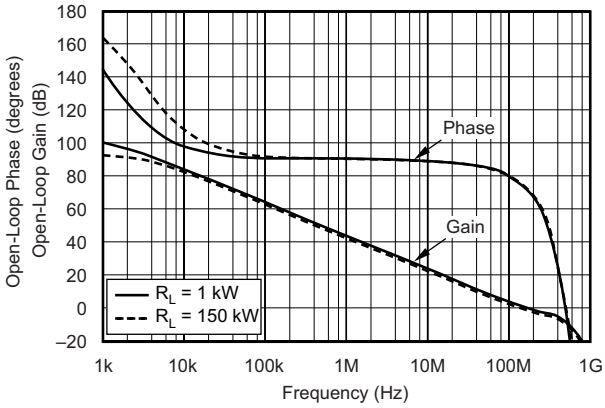

图 18. Open-Loop Gain and Phase

Typical Characteristics (接下页)

T_A = 25°C, V_S = 5 V, G = 2, R_F = 604 Ω, and R_L = 150 Ω connected to V_S / 2, (unless otherwise noted)

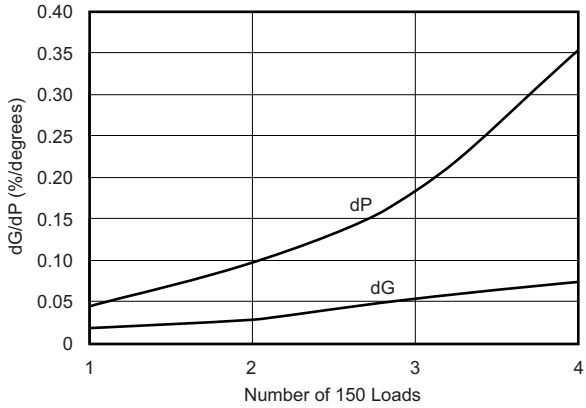

图 19. Composite Video Differential Gain and Phase

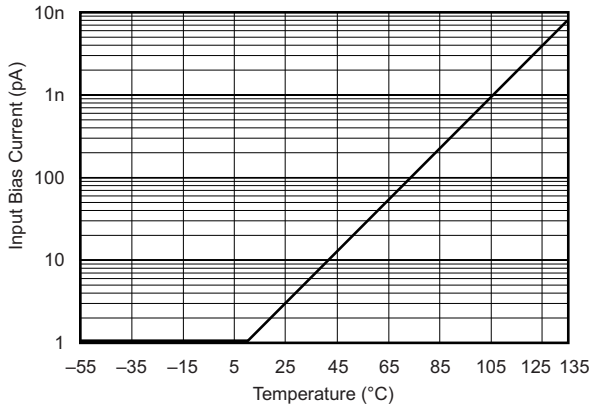

图 20. Input Bias Current vs Temperature

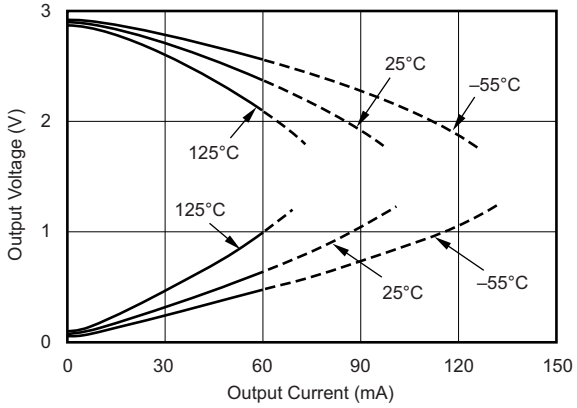

Continuous currents above 60 mA are not recommended

V_S = 3 V

图 21. Output Voltage Swing vs Output Current

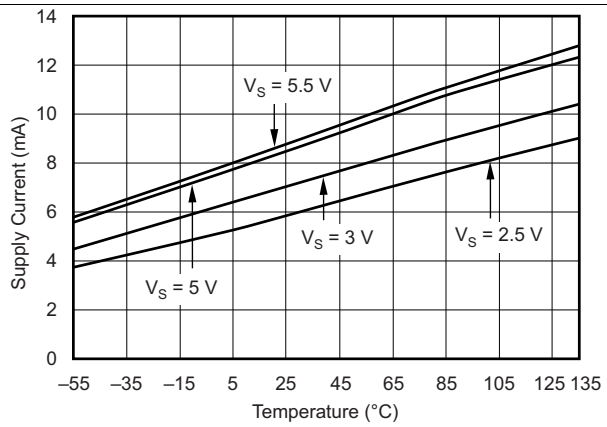

图 22. Supply Current vs Temperature

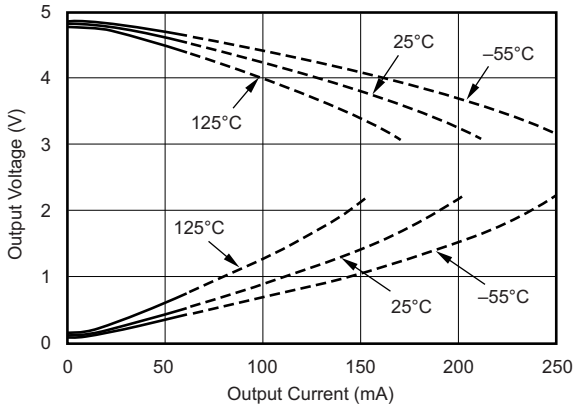

Continuous currents above 60 mA are not recommended

V_S = 5 V

图 23. Output Voltage Swing vs Output Current

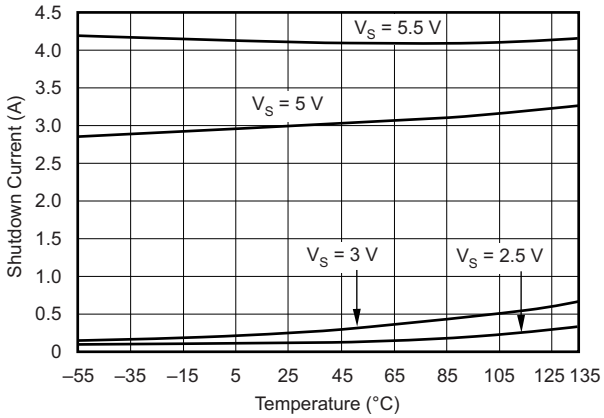

图 24. Shutdown Current vs Temperature

版权 © 2001–2018, Texas Instruments Incorporated

Typical Characteristics (接下页)

T_A = 25°C, V_S = 5 V, G = 2, R_F = 604 Ω, and R_L = 150 Ω connected to V_S / 2, (unless otherwise noted)

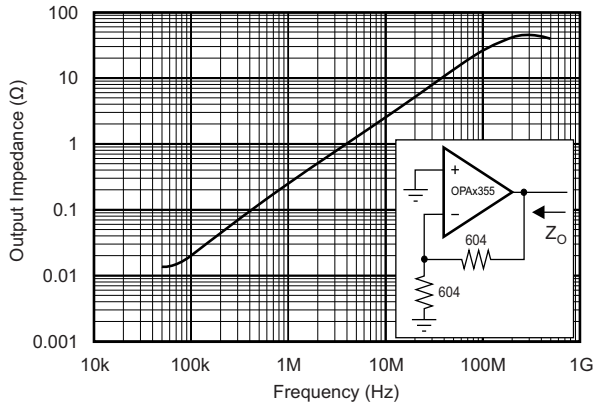

图 25. Closed-Loop Output Impedance vs Frequency

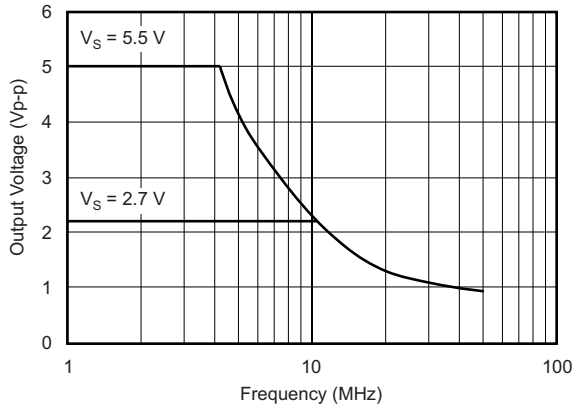

Maximum output voltage without slew-rate induced distortion

图 26. Maximum Output Voltage vs Frequency

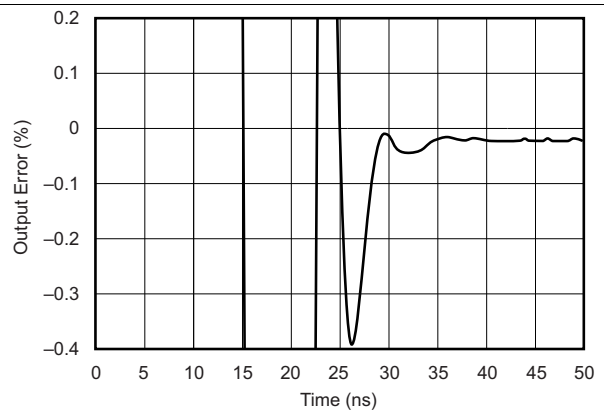

V_O = 2 V_{P-P}

图 27. Output Settling Time to 0.1%

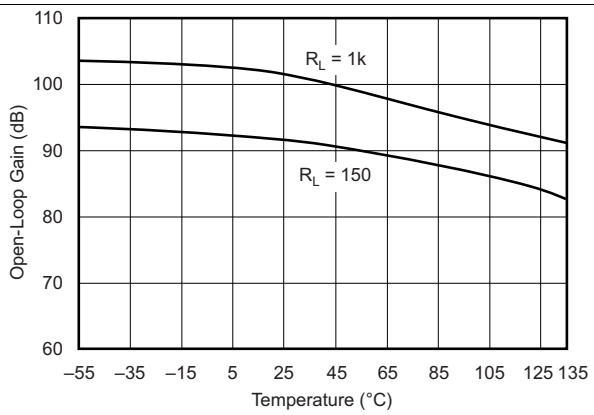

图 28. Open-Loop Gain vs Temperature

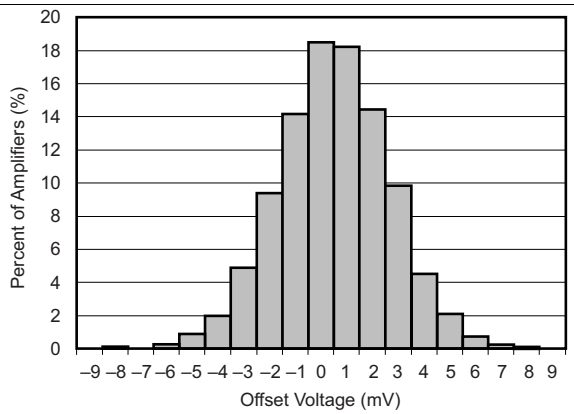

图 29. Offset Voltage Production Distribution

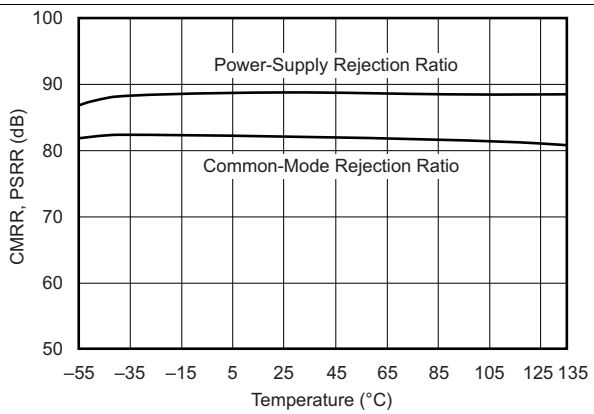

图 30. Common-Mode Rejection Ratio and Power-Supply Rejection Ratio vs Temperature

8 Detailed Description

8.1 Overview

The OPA355 series is a CMOS, high-speed, voltage-feedback, operational amplifier designed for video and other general-purpose applications. The series is available as a single, dual, or triple op amp. The family features a 200-MHz gain bandwidth and 360 V/µs slew rate, but the series is unity-gain stable and can operate as a 1 V/V voltage follower.

The input common-mode range includes ground, allowing the OPAx355 family to be used in virtually any single-supply application up to a supply voltage of 5.5 V.

8.2 Functional Block Diagram

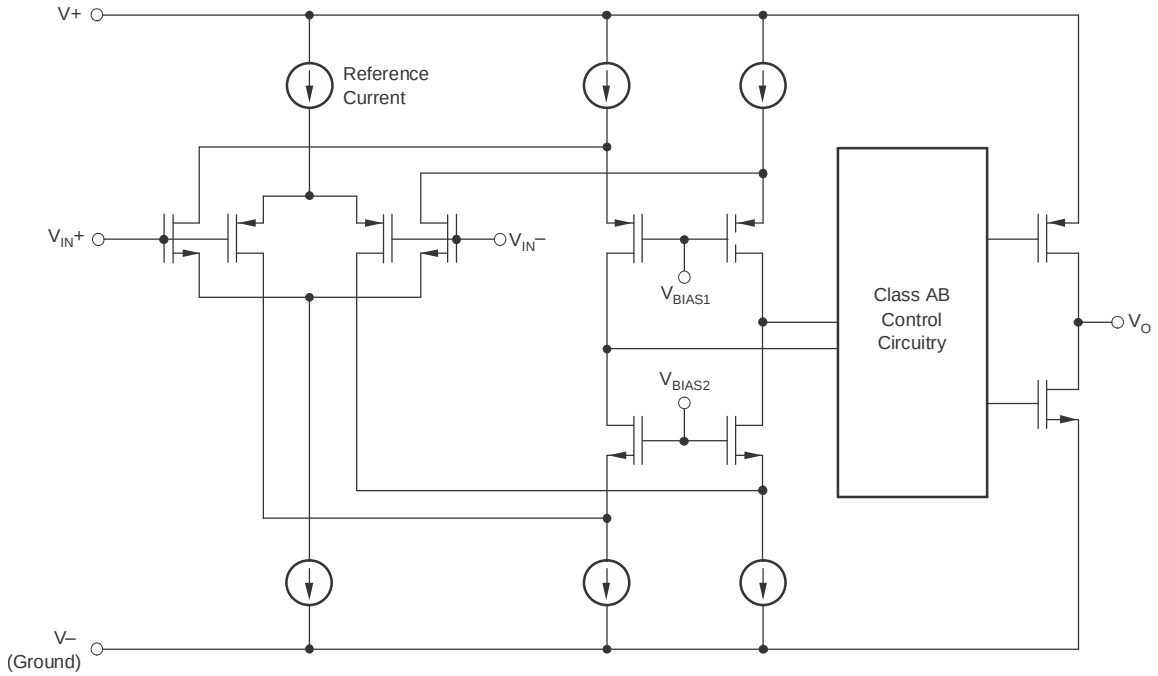

8.3 Feature Description

8.3.1 Operating Voltage

The OPAx355 family is specified over a power-supply range of 2.7 V to 5.5 V (±1.35 to ±2.75 V). However, the supply voltage ranges from 2.5 to 5.5 V (±1.25 to ±2.75 V). Supply voltages higher than 7.5 V (absolute maximum) can permanently damage the amplifier.

Parameters that vary significantly over supply voltage or temperature are shown in the *Typical Characteristics* section of this data sheet.

8.3.2 Enable Function

The OPAx355 series is enabled by applying a TTL high-voltage level to the enable pin. Conversely, a TTL low - voltage level disables the amplifier, which reduces the supply current from 8.3 mA to 3.4 µA per amplifier. This pin voltage is referenced to a single-supply ground. When using a split-supply, such as ±2.5 V, the enable and disable voltage levels are referenced to V–. For portable battery-operated applications, this feature greatly reduces the average current and as a result, extends battery life.

The enable input is modeled as a CMOS input gate with a 100-kΩ pullup resistor to V+. The enable pin assumes a logic high and the amplifier turns on if the enable pin is left open.

版权 © 2001–2018, Texas Instruments Incorporated

Feature Description (接下页)

The enable time is 100 ns and the disable time is 30 ns, which allows the OPAx355 series to operate as a *gated* amplifier, or to have the output multiplexed onto a common output bus. When disabled, the output assumes a high-impedance state.

8.3.3 Output Drive

The output stage supplies a high short-circuit current (typically over 200 mA). Therefore, an on-chip thermal shutdown circuit is provided to protect the OPAx355 series from dangerously-high junction temperatures. At 160°C, the protection circuit shuts down the amplifier. Normal operation resumes when the junction temperature cools to below 140°C.

注

Running a continuous DC current in excess of ±60 mA is not recommended. See the *Output Voltage Swing vs Output Current* graphs (图 21 and 图 22) in the *Typical Characteristics* section.

8.4 Device Functional Modes

The OPAx355 family is powered on when the supply is connected. The series operates as a single supply operational amplifier or dual supply amplifier depending on the application. The series is used with asymmetrical supplies as long as the differential voltage (V– to V+) is at least 1.8 V and no greater than 5.5 V (example: V– set to –3.5 V and V+ set to 1.5 V).

9 Application and Implementation

注

Information in the following applications sections is not part of the TI component specification, and TI does not warrant its accuracy or completeness. TI's customers are responsible for determining suitability of components for their purposes. Customers should validate and test their design implementation to confirm system functionality.

9.1 Application Information

The OPAx355 series is a CMOS, high-speed, voltage-feedback, operational amplifier (op amp) designed for general-purpose applications.

The amplifiers feature a 200-MHz gain bandwidth and 300-V/µs slew rate, but the devices are unity-gain stable and operate as a 1-V/V voltage follower.

The input common-mode voltage range of the series includes ground, which allows the OPAx355 to be used in virtually any single-supply application up to a supply voltage of 5.5 V.

9.2 Typical Applications

9.2.1 Transimpedance Amplifier

Wide gain bandwidth, low input bias current, low input voltage, and current noise make the OPAx355 series a preferred wideband photodiode transimpedance amplifier family. Low voltage noise is important because photodiode capacitance causes the effective noise gain of the circuit to increase at high frequencies.

The key elements to a transimpedance design, as shown in 图 31, are the expected diode capacitance ($C_{[D]}$), which must include the parasitic input common-mode and differential-mode input capacitance (4 pF + 5 pF), the desired transimpedance gain ($R_{[FB]}$), and the gain-bandwidth (GBW) for the OPAx355 family (20 MHz). With these three variables set, the feedback capacitor value ($C_{[FB]}$) controls the frequency response. $C_{[FB]}$ includes the stray capacitance of $R_{[FB]}$, which is 0.2 pF for a typical surface-mount resistor.

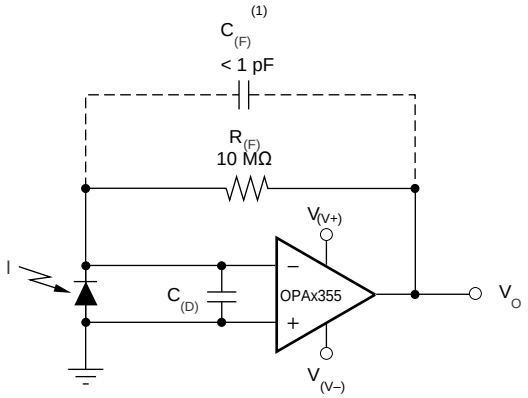

(1) $C_{(FB)}$ is optional to prevent gain peaking. $C_{(FB)}$ includes the stray capacitance of $R_{(FB)}$.

图 31. Dual-Supply Transimpedance Amplifier

9.2.1.1 Design Requirements

PARAMETER	VALUE
Supply voltage $V_{(V+)}$	2.5 V
Supply voltage $V_{(V–)}$	–2.5 V

版权 © 2001–2018, Texas Instruments Incorporated

9.2.1.2 Detailed Design Procedure

To achieve a maximally-flat, second-order Butterworth frequency response, set the feedback pole to:

$$\frac{1}{2 \times \pi \times R_{(FB)} \times C_{(FB)}} = \sqrt{\frac{GBW}{4 \times \pi \times R_{(FB)} \times C_{(D)}}} \tag{1}$$

Use 公式 2 to calculate the bandwidth.

$$f_{(-3\ dB)} = \sqrt{\frac{GBW}{2 \times \pi \times R_{(FB)} \times C_{(D)}}} \tag{2}$$

For other transimpedance bandwidths, consider the high-speed CMOS OPA380 (90-MHz GBW), OPA354 (100-MHz GBW), OPA300 (180-MHz GBW), OPA355 (200-MHz GBW), or OPA656 and OPA657 (400-MHz GBW).

For single-supply applications, the +INx input is biased with a positive DC voltage to allow the output to reach true zero when the photodiode is not exposed to any light, and respond without the added delay that results from coming out of the negative rail. 图 32 shows this configuration. This bias voltage appears across the photodiode, providing a reverse bias for faster operation.

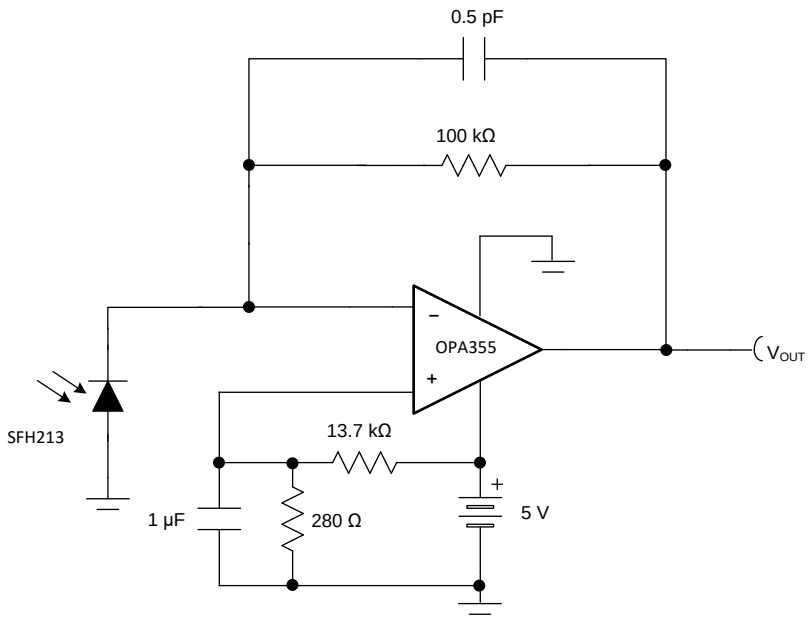

图 32. Single-Supply Transimpedance Amplifier

For additional information, see *Compensate Transimpedance Amplifiers Intuitively*.

9.2.1.2.1 Optimizing The Transimpedance Circuit

To achieve the best performance, select components according to the following guidelines:

1. For lowest noise, select $R_{(FB)}$ to create the total required gain. Using a lower value for $R_{(FB)}$ and adding gain after the transimpedance amplifier generally results in poorer noise performance. $R_{(FB)}$ produces noise that increases with the square root of $R_{(FB)}$, whereas the signal increases linearly. Therefore, signal-to-noise ratio improves when all the required gain is placed in the transimpedance stage.
2. Minimize photodiode capacitance and stray capacitance at the summing junction (inverting input). This capacitance causes the voltage noise of the op amp to amplify (increasing amplification at high frequencies). Using a low-noise voltage source to reverse-bias a photodiode can significantly reduce the capacitance. Smaller photodiodes have lower capacitance. Use optics to concentrate light on a small photodiode.
3. Noise increases with increased bandwidth. Only use the required circuit bandwidth. Use a capacitor across the $R_{(FB)}$ to limit bandwidth, even if a capacitor is not required for stability.
4. Circuit board leakage can degrade the performance of an otherwise well-designed amplifier. Clean the circuit board carefully. Control leakage by using a circuit board guard trace that encircles the summing junction and

drives at the same voltage.

For additional information, see *Noise Analysis of FET Transimpedance Amplifiers* and *Noise Analysis for High-Speed Op Amps*).

9.2.1.3 Application Curve

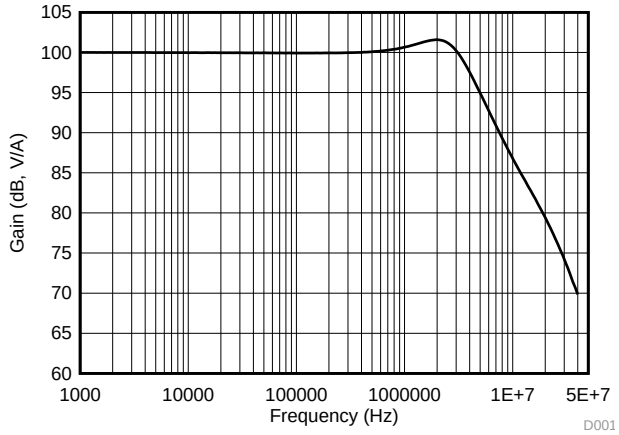

–3 dB bandwidth is 4.56 MHz

图 33. AC Transfer Function

9.2.2 High-Impedance Sensor Interface

Many sensors have high source impedances that may range up to 10 MΩ, or even higher. The output signal of sensors often must be amplified or otherwise conditioned by an amplifier. The input bias current of this amplifier loads the sensor output and causes a voltage drop across the source resistance, 图 34 shows ($V_{(+INx)} = V_S - I_{(BIAS)} \times R_{(S)}$.)The last term ($I_{(BIAS)} \times R_{(S)}$) shows the voltage drop across $R_{(S)}$. To prevent errors introduced to the system as a result of this voltage, use an op amp with low input bias current with high-impedance sensors. This low current keeps the $I_{(BIAS)} \times R_{(S)}$ error contribution less than the input voltage noise of the amplifier so that input voltage noise is not the dominant noise factor. The OPAx355 op amps feature low input bias current (typically 200 fA), and as a result, a preferred choice for these applications.

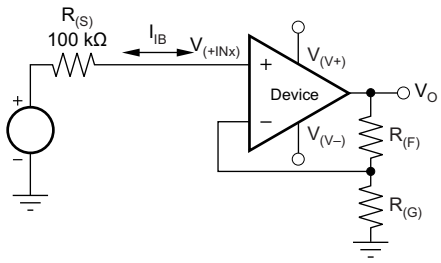

图 34. Noise as a Result of $I_{(BIAS)}$

版权 © 2001–2018, Texas Instruments Incorporated

9.2.3 Driving ADCs

The OPAx355 op amps are designed to drive sampling analog-to-digital converters (ADCs) with sampling speeds up to 1 MSPS. The zero-crossover distortion input stage topology allows the OPAx355 series to drive ADCs without degrading differential linearity and THD.

The OPAx355 series buffers the ADC switched input capacitance and resulting charge injection while providing signal gain. 图 35 shows the OPAx355 series configured to drive the ADS8326.

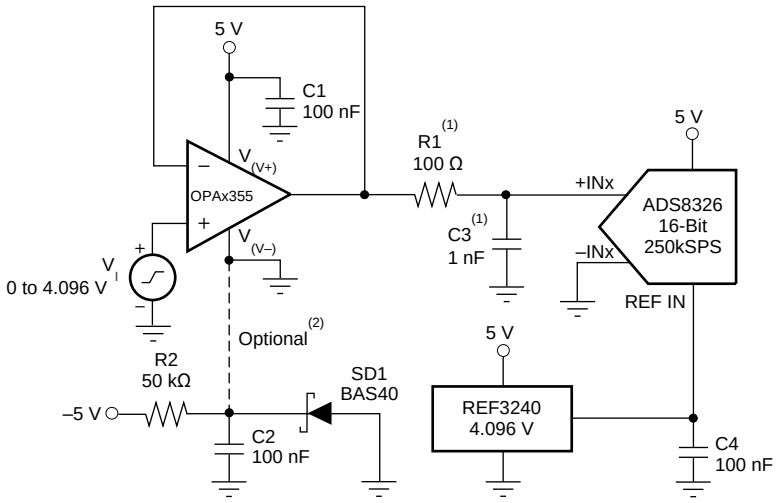

(1) Suggested value; may require adjustment based on specific application.

(2) Single-supply applications lose a small number of ADC codes near ground as a result of op amp output swing limitation. If a negative power supply is available, this simple circuit creates a –0.3-V supply to allow output swing to true ground potential.

图 35. Driving the ADS8326

9.2.4 Active Filter

The OPAx355 series is designed for active filter applications that require a wide bandwidth, fast slew rate, low-noise, single-supply operational amplifier. 图 36 shows a 500 kHz, second-order, low-pass filter using the multiple-feedback (MFB) topology. The components are selected to provide a maximally-flat Butterworth response. Beyond the cutoff frequency, roll-off is –40 dB/dec. The Butterworth response is preferred for applications requiring predictable gain characteristics, such as the anti-aliasing filter used in front of an ADC.

One point to observe when considering the MFB filter is that the output is inverted, relative to the input. If this inversion is not required, or not desired, a noninverting output can be achieved through one of the following options:

1. Adding an inverting amplifier
2. Adding an additional second-order MFB stage
3. Using a noninverting filter topology, such as the Sallen-Key (see 图 37).

MFB and Sallen-Key, low-pass and high-pass filter synthesis is quickly accomplished using TI's FilterPro™ program. This software is available as a free download at www.ti.com.

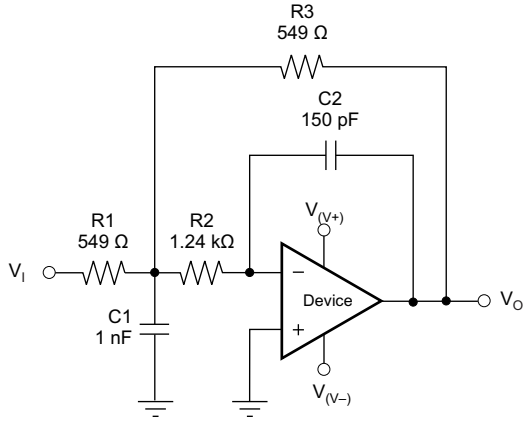

图 36. Second-Order Butterworth 500-kHz Low-Pass Filter

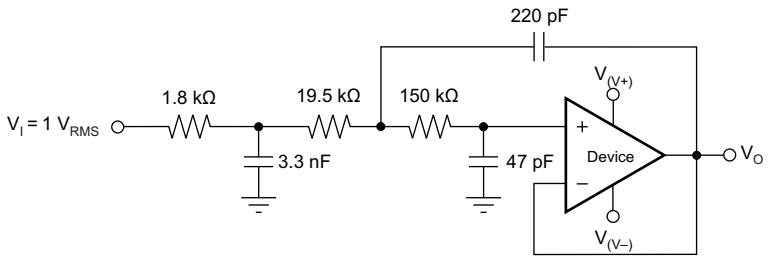

图 37. OPAx355 Configured as a Three-Pole, 20-kHz, Sallen-Key Filter

9.3 Video

The OPAx355 output stage is capable of driving a standard back-terminated 75-Ω video cable. By back-terminating a transmission line, the line does not exhibit a capacitive load to the driver. A properly back-terminated 75-Ω cable does not appear as capacitance; the cable presents only a 150-Ω resistive load to the OPAx355 output.

The OPAx355 can be used as an amplifier for RGB graphic signals, which have a voltage of zero at the video black level by offsetting and AC-coupling the signal, as shown in 图 38.

版权 © 2001–2018, Texas Instruments Incorporated

Video (接下页)

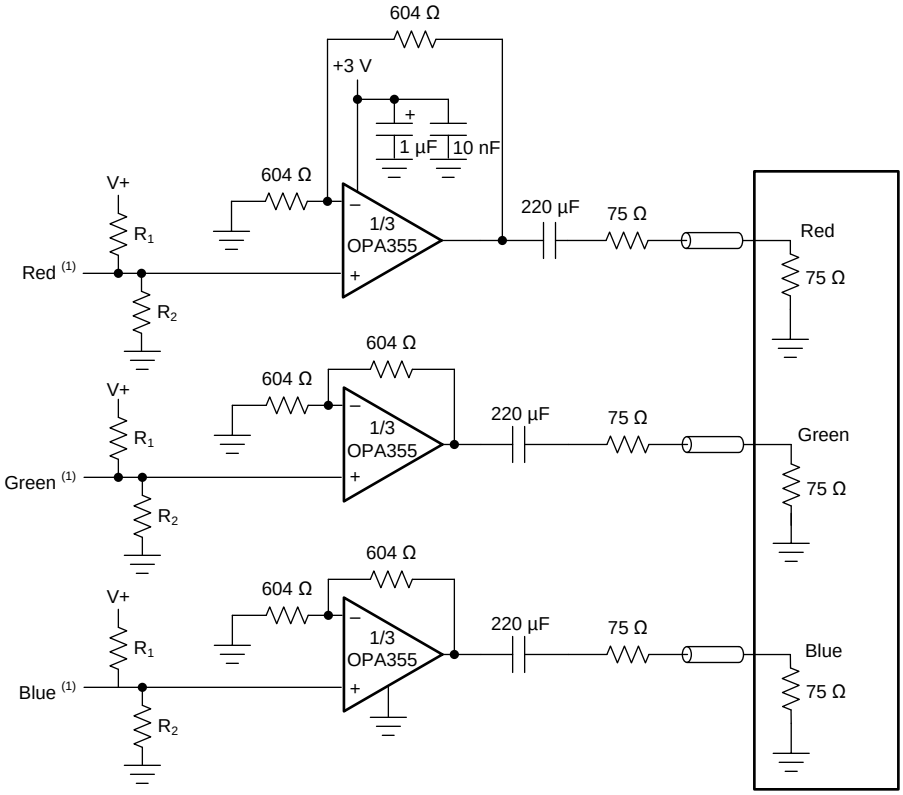

图 38. RGB Cable Driver

9.4 Wideband Video Multiplexing

One common application for video speed amplifiers which include an enable pin is to wire multiple amplifier outputs together, then select which one of several possible video inputs to source onto a single line. This simple wired-OR video multiplexer can be easily implemented using the OPA357; see 图 39.

Wideband Video Multiplexing (接下页)

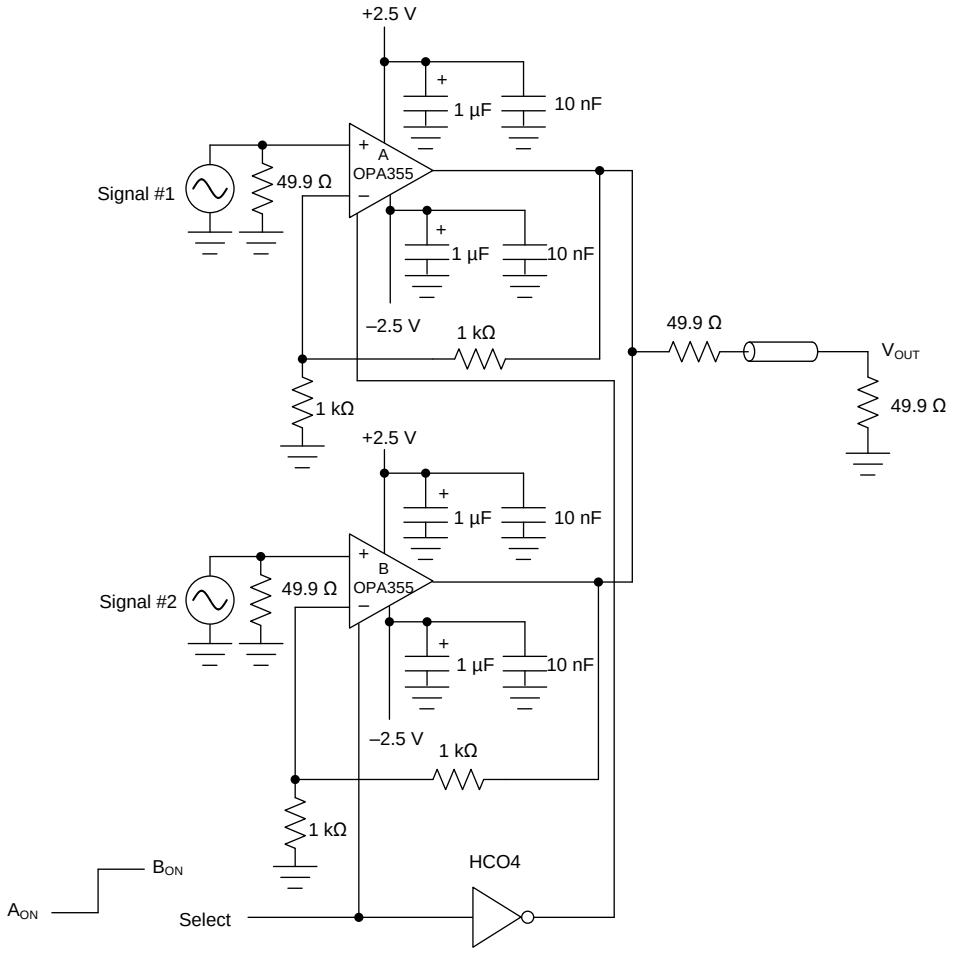

图 39. Multiplexed Output

版权 © 2001–2018, Texas Instruments Incorporated

10 Power Supply Recommendations

The OPAx355 is specified for operation from 2.7 to 5.5 V (±1.35 to ±2.75 V); many specifications apply from –40°C to +125°C. Parameters that can exhibit significant variance with regard to operating voltage or temperature are shown in the *Typical Characteristics* section.

Place 0.1-µF bypass capacitors close to the power-supply pins to reduce errors coupling in from noisy or high-impedance power supplies. For more detailed information on bypass capacitor placement, see the *Layout Guidelines* section.

Power dissipation depends on power-supply voltage, signal and load conditions. With DC signals, power dissipation is equal to the product of output current times the voltage across the conducting output transistor, VS – VO. Minimize power dissipation by using the lowest possible power-supply voltage required to ensure the required output voltage swing.

For resistive loads, the maximum power dissipation occurs at a DC output voltage of one-half the power-supply voltage. Dissipation with AC signals is lower. *Power Amplifier Stress and Power Handling Limitations* explains how to calculate or measure power dissipation with unusual signals and loads, and is available on www.ti.com.

Any tendency to activate the thermal protection circuit indicates excessive power dissipation or an inadequate heat sink. For reliable operation, limit junction temperature to 150°C maximum. To estimate the margin of safety in a complete design, increase the ambient temperature to trigger the thermal protection at 160°C. The thermal protection must trigger more than 35°C above the maximum expected ambient condition of the application.

11 Layout

11.1 Layout Guidelines

Good high-frequency printed-circuit board (PCB) layout techniques must be used for the OPAx355 amplifiers. Generous use of ground planes, short direct-signal traces, and a preferred bypass capacitor located at the V+ pin ensures clean and stable operation. Large areas of copper help dissipate heat generated within the amplifiers in normal operation.

Sockets are not recommended for use with any high-speed amplifier.

A 10-nF ceramic bypass capacitor is the minimum recommended value; adding a 1-µF or larger tantalum capacitor in parallel is beneficial when driving a low-resistance load. Providing adequate bypass capacitance is essential to achieving very low harmonic and intermodulation distortion.

11.2 Layout Example

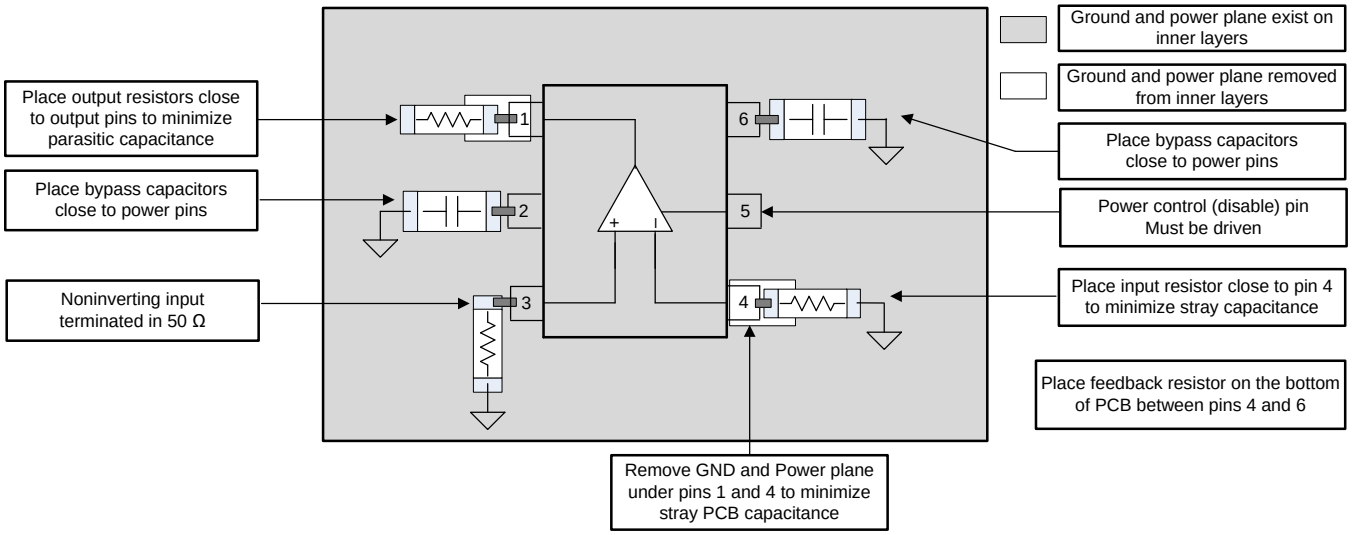

图 40. Layout Example

12 器件和文档支持

12.1 相关链接

下表列出了快速访问链接。类别包括技术文档、支持和社区资源、工具和软件，以及立即订购快速访问。

表 **1.** 相关链接

器件	产品文件夹	立即订购	技术文档	工具和软件	支持和社区
OPA355	单击此处	单击此处	单击此处	单击此处	单击此处
OPA2355	单击此处	单击此处	单击此处	单击此处	单击此处
OPA3355	单击此处	单击此处	单击此处	单击此处	单击此处

12.2 接收文档更新通知

要接收文档更新通知，请导航至 TI.com.cn 上的器件产品文件夹。单击右上角的*通知我* 进行注册，即可每周接收产品信息更改摘要。有关更改的详细信息，请查看任何已修订文档中包含的修订历史记录。

12.3 社区资源

下列链接提供到 TI 社区资源的连接。链接的内容由各个分销商“按照原样”提供。这些内容并不构成 TI 技术规范，并且不一定反映 TI 的观点；请参阅 TI 的 《使用条款》。

TI E2E™ 在线社区 ***TI 的工程师对工程师 (E2E) 社区。***此社区的创建目的在于促进工程师之间的协作。在 e2e.ti.com 中，您可以咨询问题、分享知识、拓展思路并与同行工程师一道帮助解决问题。

设计支持 ***TI 参考设计支持*** 可帮助您快速查找有帮助的 E2E 论坛、设计支持工具以及技术支持的联系信息。

12.4 商标

E2E is a trademark of Texas Instruments.
FilterPro is a trademark of Texas Instruments Incorporated.
All other trademarks are the property of their respective owners.

12.5 静电放电警告

ESD 可能会损坏该集成电路。德州仪器 (TI) 建议通过适当的预防措施处理所有集成电路。如果不遵守正确的处理措施和安装程序，可能会损坏集成电路。

ESD 的损坏小至导致微小的性能降级，大至整个器件故障。 精密的集成电路可能更容易受到损坏，这是因为非常细微的参数更改都可能会导致器件与其发布的规格不相符。

12.6 术语表

SLYZ022 — *TI 术语表*。

这份术语表列出并解释术语、缩写和定义。

版权 © 2001–2018, Texas Instruments Incorporated

13 机械、封装和可订购信息

以下页面包含机械、封装和可订购信息。这些信息是指定器件的最新可用数据。数据如有变更，恕不另行通知，且不会对此文档进行修订。如需获取此产品说明书的浏览器版本，请查阅左侧的导航栏。

PACKAGING INFORMATION

Orderable Device	Status (1)	Package Type	Package Drawing	Pins	Package Qty	Eco Plan (2)	Lead finish/ Ball material (6)	MSL Peak Temp (3)	Op Temp (°C)	Device Marking (4/5)	Samples
OPA2355DGSA/250	ACTIVE	VSSOP	DGS	10	250	RoHS & Green	NIPDAUAG	Level-2-260C-1 YEAR	-40 to 125	D55	Samples
OPA2355DGSA/250G4	ACTIVE	VSSOP	DGS	10	250	RoHS & Green	NIPDAUAG	Level-2-260C-1 YEAR	-40 to 125	D55	Samples
OPA3355EA/250	ACTIVE	TSSOP	PW	14	250	RoHS & Green	NIPDAU	Level-2-260C-1 YEAR	-40 to 125	OPA 3355EA	Samples
OPA3355EA/250G4	ACTIVE	TSSOP	PW	14	250	RoHS & Green	NIPDAU	Level-2-260C-1 YEAR	-40 to 125	OPA 3355EA	Samples
OPA3355EA/2K5	ACTIVE	TSSOP	PW	14	2500	RoHS & Green	NIPDAU	Level-2-260C-1 YEAR	-40 to 125	OPA 3355EA	Samples
OPA3355UA	ACTIVE	SOIC	D	14	50	RoHS & Green	NIPDAU	Level-2-260C-1 YEAR	-40 to 125	OPA3355UA	Samples
OPA355NA/250	ACTIVE	SOT-23	DBV	6	250	RoHS & Green	NIPDAU	Level-2-260C-1 YEAR	-40 to 125	C55	Samples
OPA355NA/250G4	ACTIVE	SOT-23	DBV	6	250	RoHS & Green	NIPDAU	Level-2-260C-1 YEAR	-40 to 125	C55	Samples
OPA355NA/3K	ACTIVE	SOT-23	DBV	6	3000	RoHS & Green	NIPDAU	Level-2-260C-1 YEAR	-40 to 125	C55	Samples
OPA355NA/3KG4	ACTIVE	SOT-23	DBV	6	3000	RoHS & Green	NIPDAU	Level-2-260C-1 YEAR	-40 to 125	C55	Samples
OPA355UA	ACTIVE	SOIC	D	8	75	RoHS & Green	NIPDAU	Level-2-260C-1 YEAR	-40 to 125	OPA 355UA	Samples
OPA355UA/2K5	ACTIVE	SOIC	D	8	2500	RoHS & Green	NIPDAU	Level-2-260C-1 YEAR	-40 to 125	OPA 355UA	Samples
OPA355UA/2K5G4	ACTIVE	SOIC	D	8	2500	RoHS & Green	NIPDAU	Level-2-260C-1 YEAR	-40 to 125	OPA 355UA	Samples
OPA355UAG4	ACTIVE	SOIC	D	8	75	RoHS & Green	NIPDAU	Level-2-260C-1 YEAR	-40 to 125	OPA 355UA	Samples

(1) The marketing status values are defined as follows:
ACTIVE: Product device recommended for new designs.
LIFEBUY: TI has announced that the device will be discontinued, and a lifetime-buy period is in effect.
NRND: Not recommended for new designs. Device is in production to support existing customers, but TI does not recommend using this part in a new design.
PREVIEW: Device has been announced but is not in production. Samples may or may not be available.
OBSOLETE: TI has discontinued the production of the device.

(2) **RoHS:** TI defines "RoHS" to mean semiconductor products that are compliant with the current EU RoHS requirements for all 10 RoHS substances, including the requirement that RoHS substance do not exceed 0.1% by weight in homogeneous materials. Where designed to be soldered at high temperatures, "RoHS" products are suitable for use in specified lead-free processes. TI may reference these types of products as "Pb-Free".
RoHS Exempt: TI defines "RoHS Exempt" to mean products that contain lead but are compliant with EU RoHS pursuant to a specific EU RoHS exemption.
Green: TI defines "Green" to mean the content of Chlorine (Cl) and Bromine (Br) based flame retardants meet JS709B low halogen requirements of <=1000ppm threshold. Antimony trioxide based flame retardants must also meet the <=1000ppm threshold requirement.

(3) MSL, Peak Temp. - The Moisture Sensitivity Level rating according to the JEDEC industry standard classifications, and peak solder temperature.

(4) There may be additional marking, which relates to the logo, the lot trace code information, or the environmental category on the device.

(5) Multiple Device Markings will be inside parentheses. Only one Device Marking contained in parentheses and separated by a "~" will appear on a device. If a line is indented then it is a continuation of the previous line and the two combined represent the entire Device Marking for that device.

(6) Lead finish/Ball material - Orderable Devices may have multiple material finish options. Finish options are separated by a vertical ruled line. Lead finish/Ball material values may wrap to two lines if the finish value exceeds the maximum column width.

Important Information and Disclaimer: The information provided on this page represents TI's knowledge and belief as of the date that it is provided. TI bases its knowledge and belief on information provided by third parties, and makes no representation or warranty as to the accuracy of such information. Efforts are underway to better integrate information from third parties. TI has taken and continues to take reasonable steps to provide representative and accurate information but may not have conducted destructive testing or chemical analysis on incoming materials and chemicals. TI and TI suppliers consider certain information to be proprietary, and thus CAS numbers and other limited information may not be available for release.

In no event shall TI's liability arising out of such information exceed the total purchase price of the TI part(s) at issue in this document sold by TI to Customer on an annual basis.

TAPE AND REEL INFORMATION

REEL DIMENSIONS

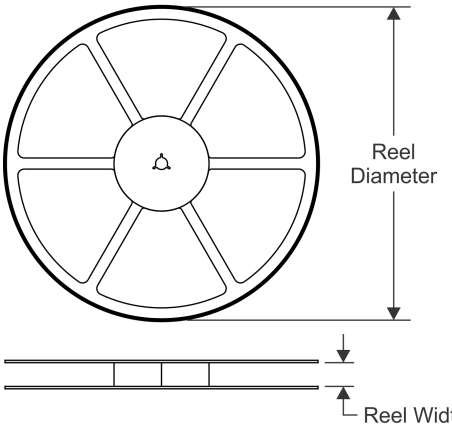

TAPE DIMENSIONS

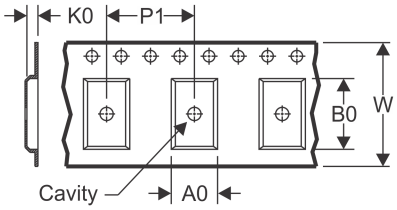

A0	Dimension designed to accommodate the component width
B0	Dimension designed to accommodate the component length
K0	Dimension designed to accommodate the component thickness
W	Overall width of the carrier tape
P1	Pitch between successive cavity centers

QUADRANT ASSIGNMENTS FOR PIN 1 ORIENTATION IN TAPE

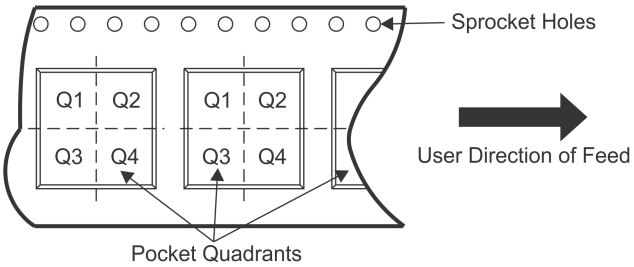

*All dimensions are nominal

Device	Package Type	Package Drawing	Pins	SPQ	Reel Diameter (mm)	Reel Width W1 (mm)	A0 (mm)	B0 (mm)	K0 (mm)	P1 (mm)	W (mm)	Pin1 Quadrant
OPA2355DGSA/250	VSSOP	DGS	10	250	180.0	12.4	5.3	3.4	1.4	8.0	12.0	Q1
OPA3355EA/250	TSSOP	PW	14	250	180.0	12.4	6.9	5.6	1.6	8.0	12.0	Q1
OPA3355EA/2K5	TSSOP	PW	14	2500	330.0	12.4	6.9	5.6	1.6	8.0	12.0	Q1
OPA355NA/250	SOT-23	DBV	6	250	178.0	9.0	3.23	3.17	1.37	4.0	8.0	Q3
OPA355NA/3K	SOT-23	DBV	6	3000	178.0	9.0	3.23	3.17	1.37	4.0	8.0	Q3
OPA355UA/2K5	SOIC	D	8	2500	330.0	12.4	6.4	5.2	2.1	8.0	12.0	Q1

TAPE AND REEL BOX DIMENSIONS

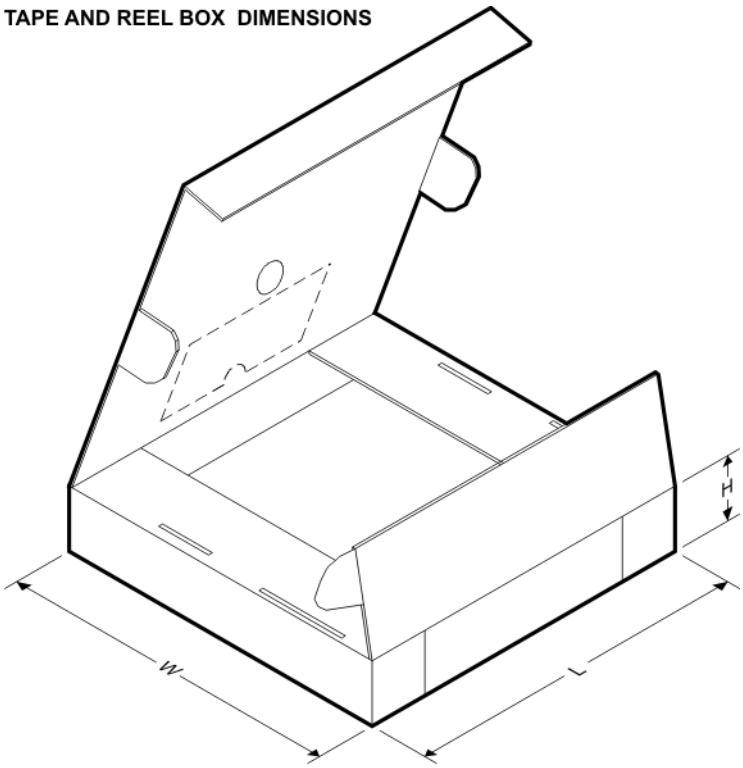

*All dimensions are nominal

Device	Package Type	Package Drawing	Pins	SPQ	Length (mm)	Width (mm)	Height (mm)
OPA2355DGSA/250	VSSOP	DGS	10	250	210.0	185.0	35.0
OPA3355EA/250	TSSOP	PW	14	250	210.0	185.0	35.0
OPA3355EA/2K5	TSSOP	PW	14	2500	853.0	449.0	35.0
OPA355NA/250	SOT-23	DBV	6	250	445.0	220.0	345.0
OPA355NA/3K	SOT-23	DBV	6	3000	445.0	220.0	345.0
OPA355UA/2K5	SOIC	D	8	2500	853.0	449.0	35.0

TUBE

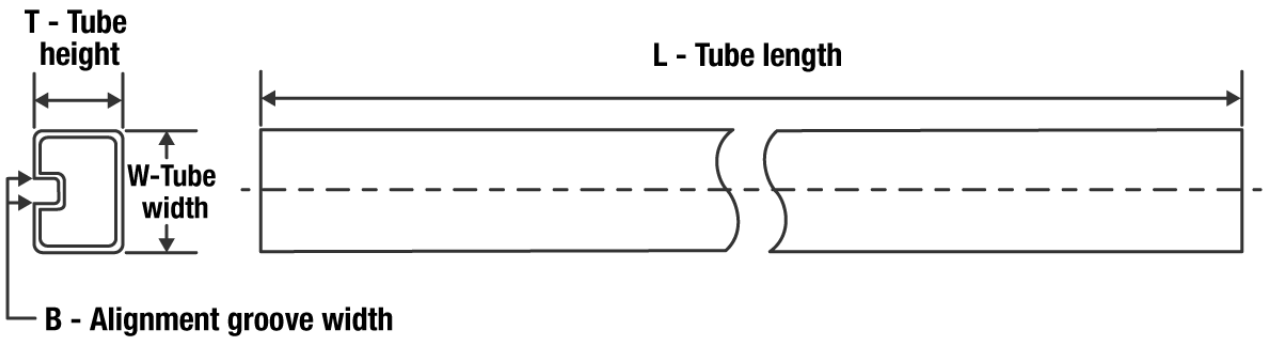

*All dimensions are nominal

Device	Package Name	Package Type	Pins	SPQ	L (mm)	W (mm)	T (µm)	B (mm)
OPA3355UA	D	SOIC	14	50	506.6	8	3940	4.32
OPA355UA	D	SOIC	8	75	506.6	8	3940	4.32
OPA355UAG4	D	SOIC	8	75	506.6	8	3940	4.32

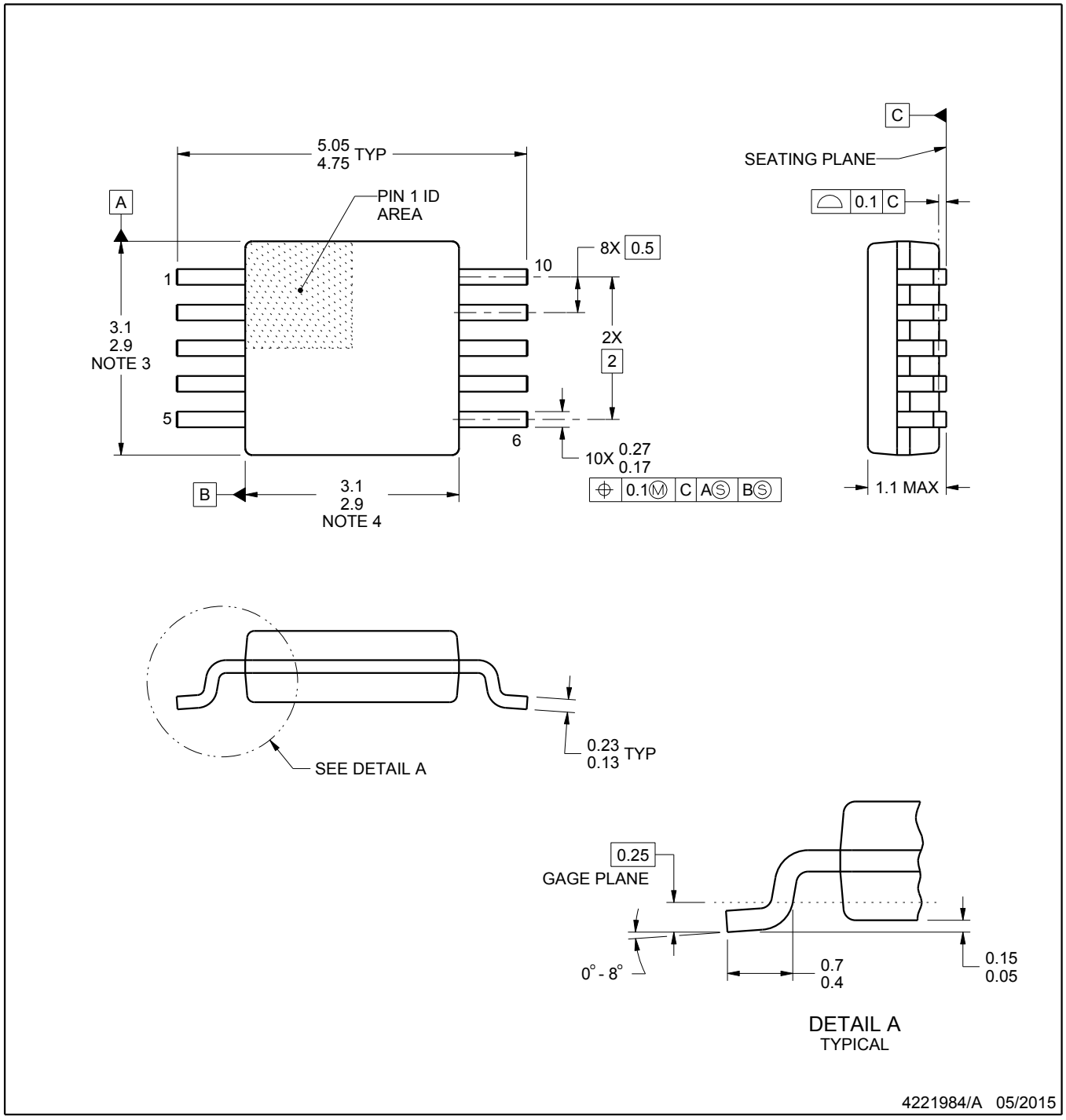

NOTES:

1. All linear dimensions are in millimeters. Any dimensions in parenthesis are for reference only. Dimensioning and tolerancing per ASME Y14.5M.
2. This drawing is subject to change without notice.
3. This dimension does not include mold flash, protrusions, or gate burrs. Mold flash, protrusions, or gate burrs shall not exceed 0.15 mm per side.
4. This dimension does not include interlead flash. Interlead flash shall not exceed 0.25 mm per side.
5. Reference JEDEC registration MO-187, variation BA.

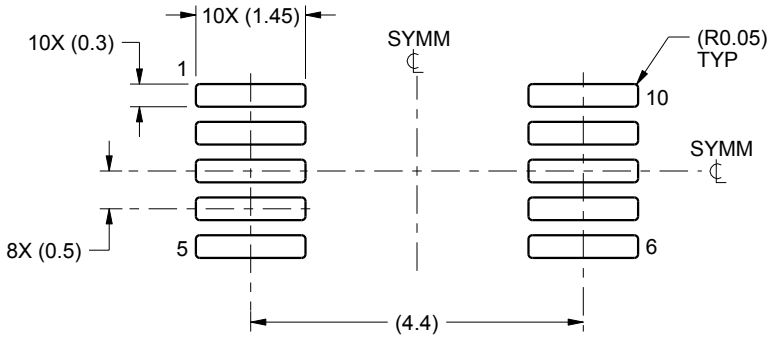

LAND PATTERN EXAMPLE
SCALE:10X

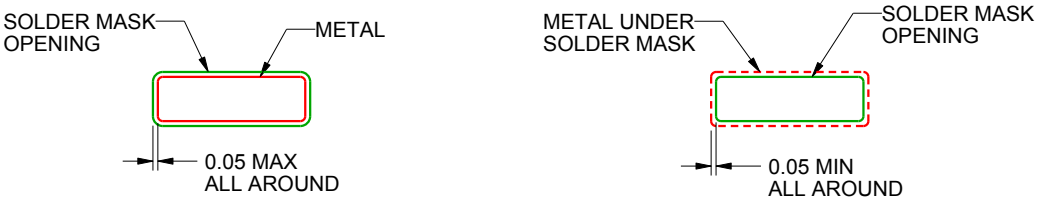

NON SOLDER MASK
DEFINED

SOLDER MASK
DEFINED

SOLDER MASK DETAILS
NOT TO SCALE

4221984/A 05/2015

NOTES: (continued)

6. Publication IPC-7351 may have alternate designs.
7. Solder mask tolerances between and around signal pads can vary based on board fabrication site.

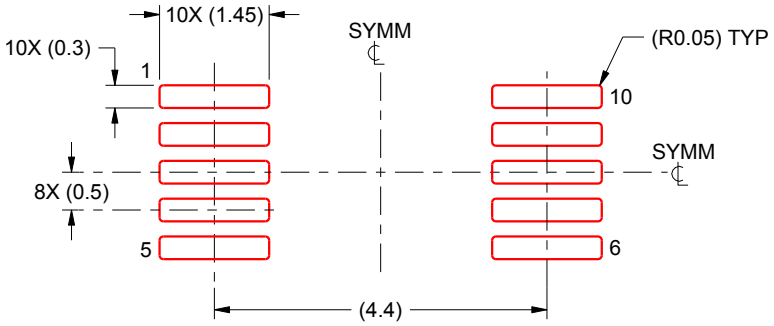

SOLDER PASTE EXAMPLE
BASED ON 0.125 mm THICK STENCIL
SCALE:10X

4221984/A 05/2015

NOTES: (continued)

8. Laser cutting apertures with trapezoidal walls and rounded corners may offer better paste release. IPC-7525 may have alternate design recommendations.
9. Board assembly site may have different recommendations for stencil design.

D (R–PDSO–G14) PLASTIC SMALL OUTLINE

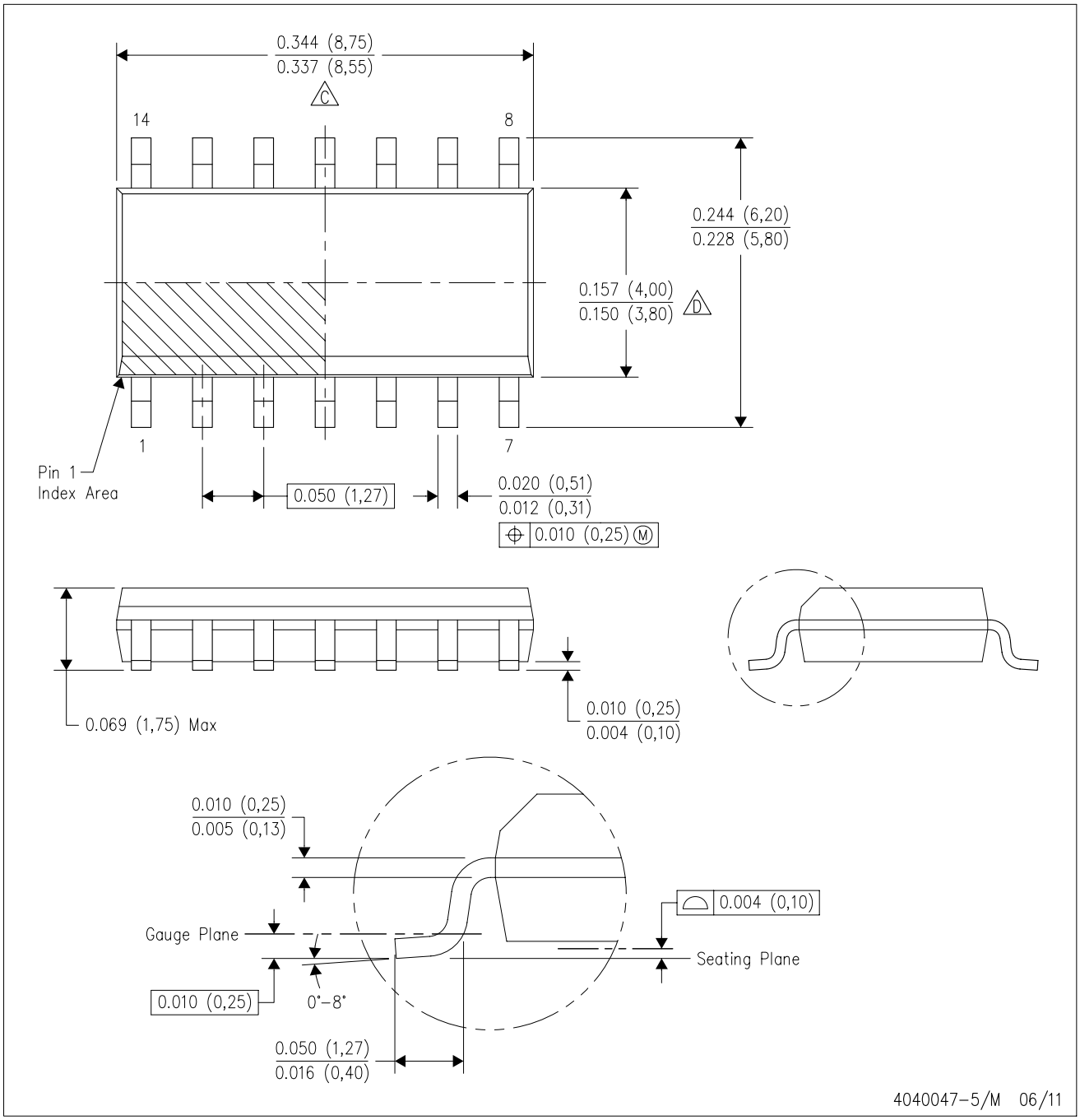

NOTES:
A. All linear dimensions are in inches (millimeters).
B. This drawing is subject to change without notice.
C. Body length does not include mold flash, protrusions, or gate burrs. Mold flash, protrusions, or gate burrs shall not exceed 0.006 (0,15) each side.
D. Body width does not include interlead flash. Interlead flash shall not exceed 0.017 (0,43) each side.
E. Reference JEDEC MS–012 variation AB.

D (R–PDSO–G14) PLASTIC SMALL OUTLINE

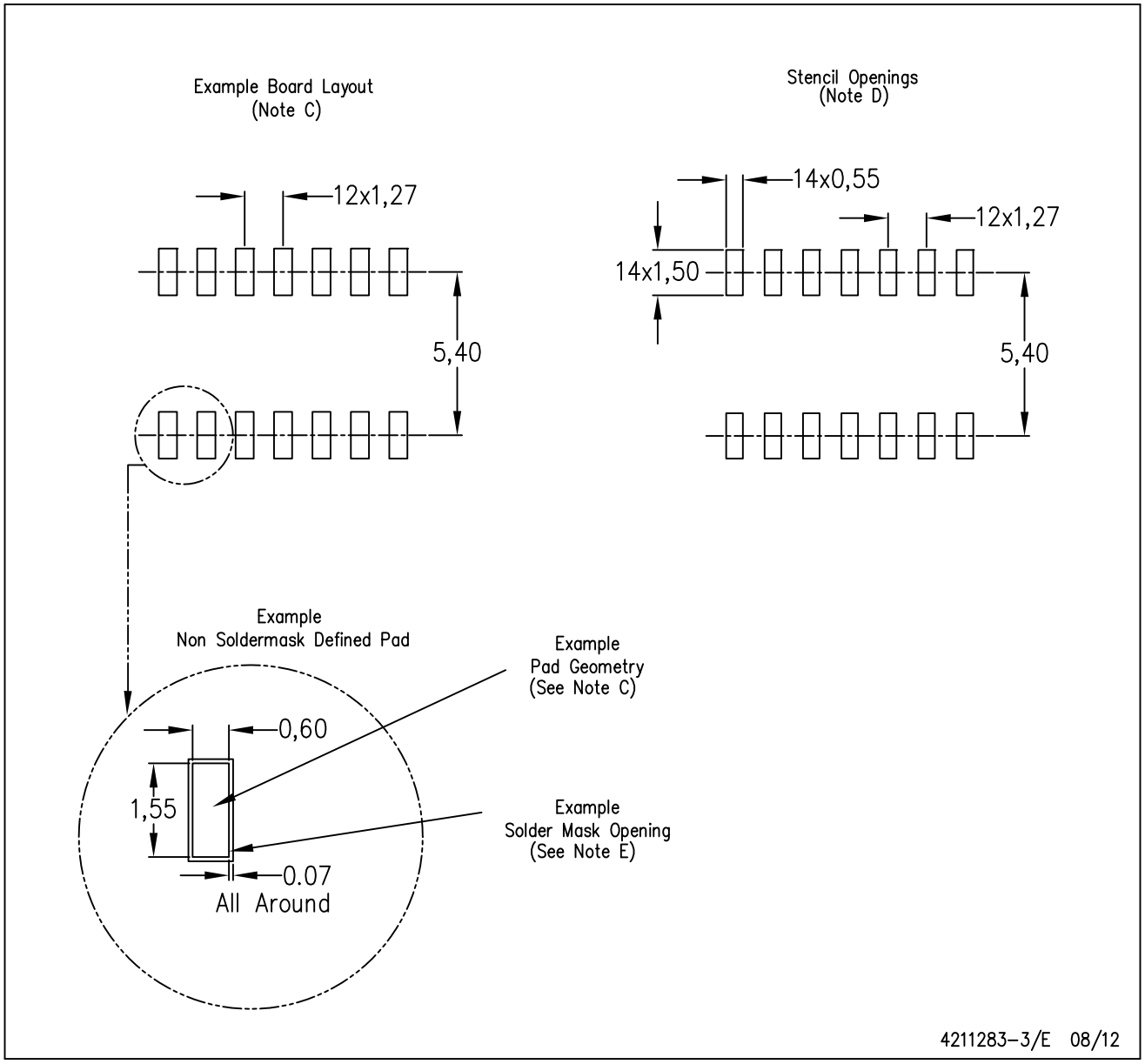

NOTES:
A. All linear dimensions are in millimeters.
B. This drawing is subject to change without notice.
C. Publication IPC–7351 is recommended for alternate designs.
D. Laser cutting apertures with trapezoidal walls and also rounding corners will offer better paste release. Customers should contact their board assembly site for stencil design recommendations. Refer to IPC–7525 for other stencil recommendations.
E. Customers should contact their board fabrication site for solder mask tolerances between and around signal pads.

PW (R–PDSO–G14) PLASTIC SMALL OUTLINE

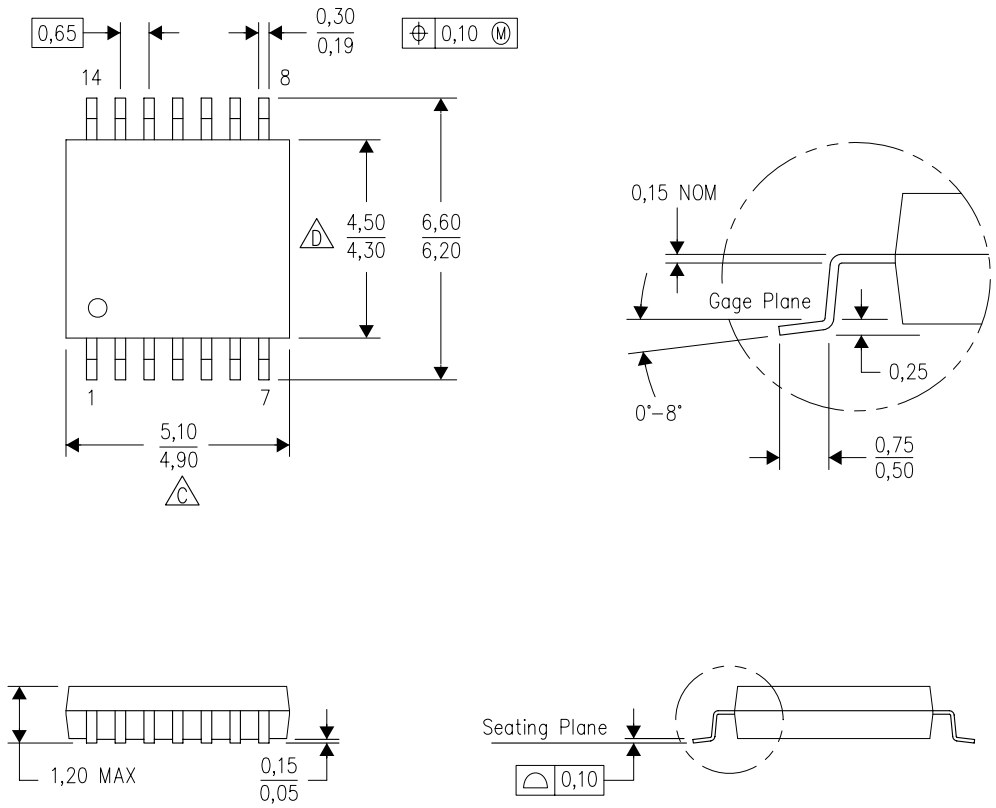

NOTES:
A. All linear dimensions are in millimeters. Dimensioning and tolerancing per ASME Y14.5M–1994.
B. This drawing is subject to change without notice.
C. Body length does not include mold flash, protrusions, or gate burrs. Mold flash, protrusions, or gate burrs shall not exceed 0,15 each side.
D. Body width does not include interlead flash. Interlead flash shall not exceed 0,25 each side.
E. Falls within JEDEC MO–153

PW (R–PDSO–G14) PLASTIC SMALL OUTLINE

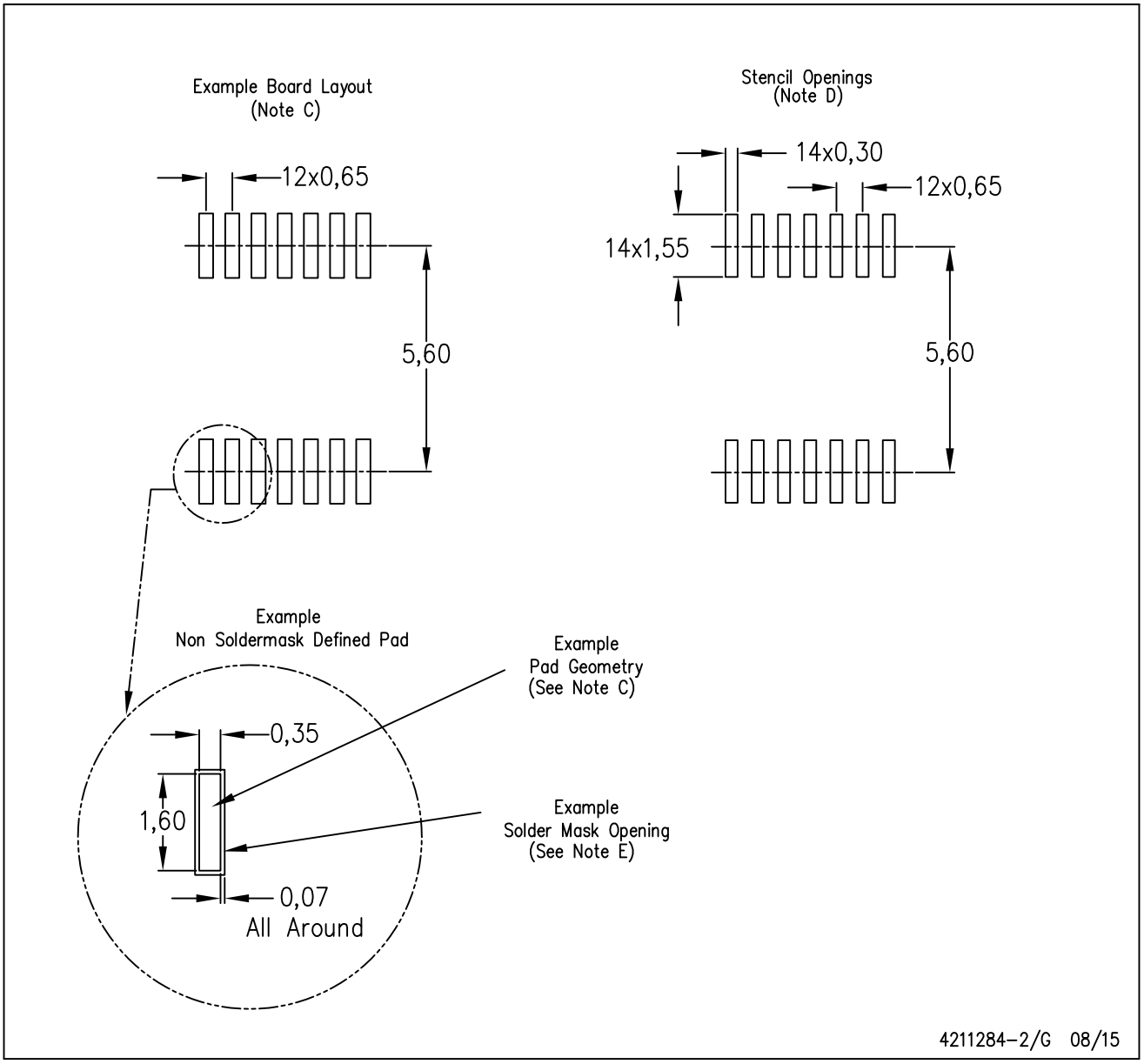

NOTES:
A. All linear dimensions are in millimeters.
B. This drawing is subject to change without notice.
C. Publication IPC–7351 is recommended for alternate designs.
D. Laser cutting apertures with trapezoidal walls and also rounding corners will offer better paste release. Customers should contact their board assembly site for stencil design recommendations. Refer to IPC–7525 for other stencil recommendations.
E. Customers should contact their board fabrication site for solder mask tolerances between and around signal pads.

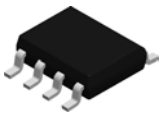

PACKAGE OUTLINE

D0008A

SOIC - 1.75 mm max height

SMALL OUTLINE INTEGRATED CIRCUIT

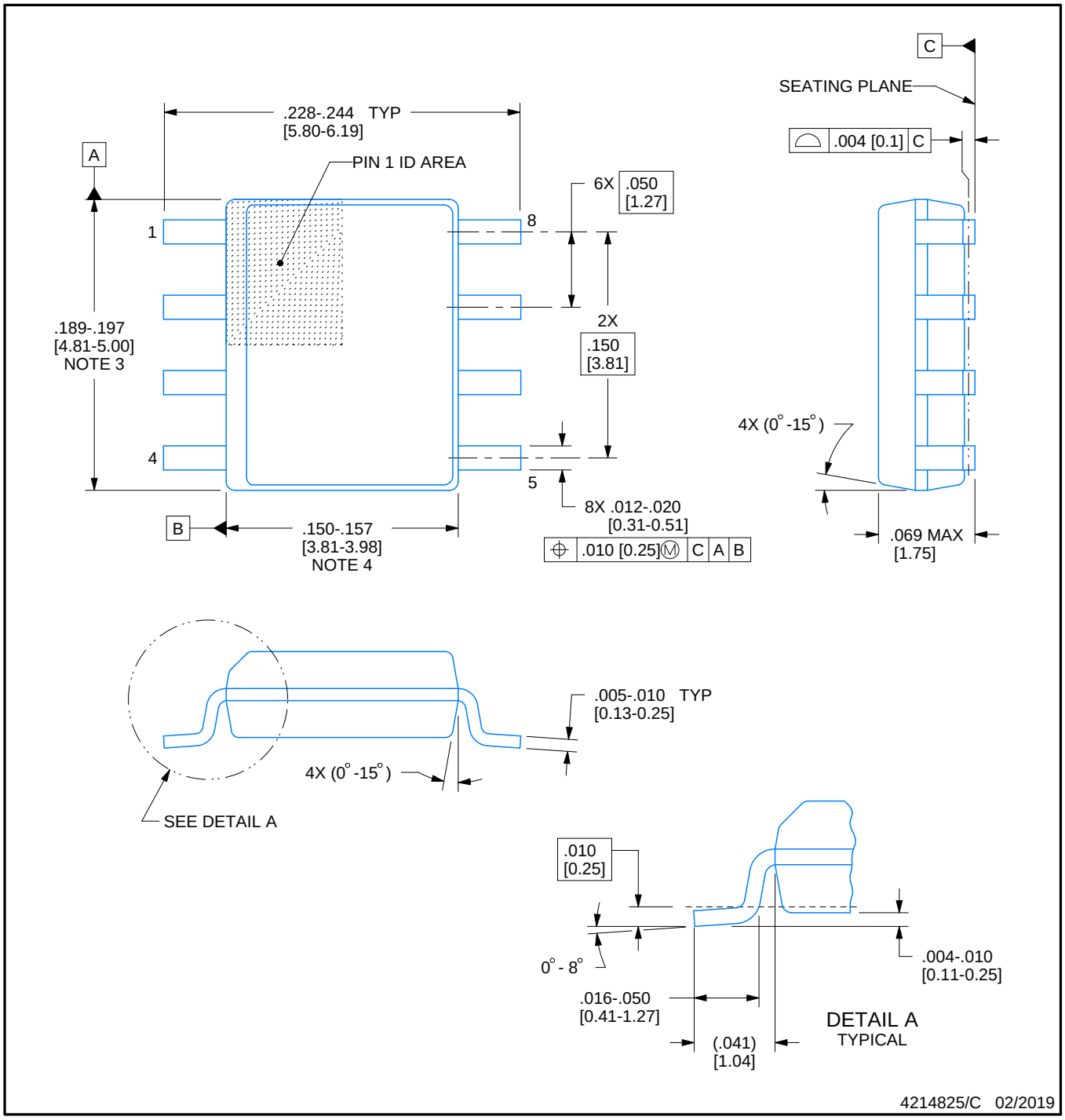

NOTES:

1. Linear dimensions are in inches [millimeters]. Dimensions in parenthesis are for reference only. Controlling dimensions are in inches. Dimensioning and tolerancing per ASME Y14.5M.
2. This drawing is subject to change without notice.
3. This dimension does not include mold flash, protrusions, or gate burrs. Mold flash, protrusions, or gate burrs shall not exceed .006 [0.15] per side.
4. This dimension does not include interlead flash.
5. Reference JEDEC registration MS-012, variation AA.

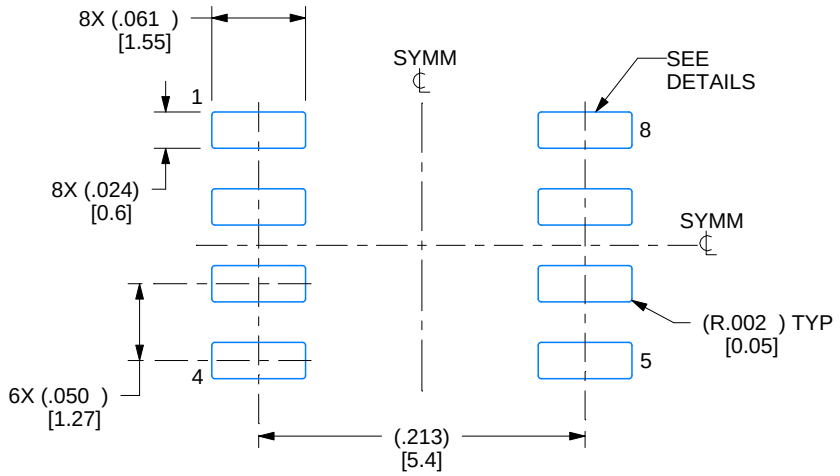

LAND PATTERN EXAMPLE
EXPOSED METAL SHOWN
SCALE:8X

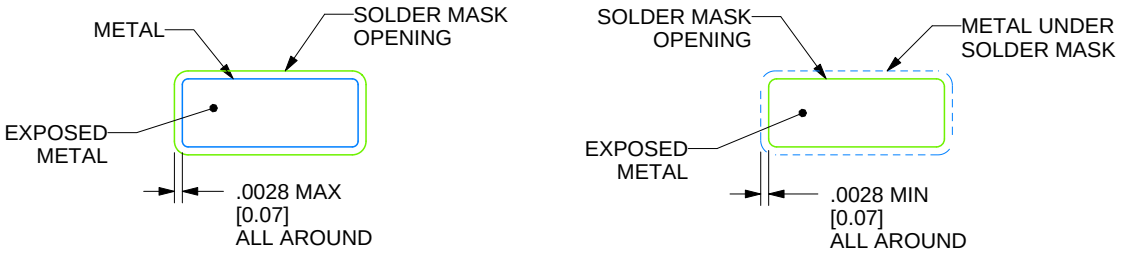

SOLDER MASK DETAILS

4214825/C 02/2019

NOTES: (continued)

6. Publication IPC-7351 may have alternate designs.
7. Solder mask tolerances between and around signal pads can vary based on board fabrication site.

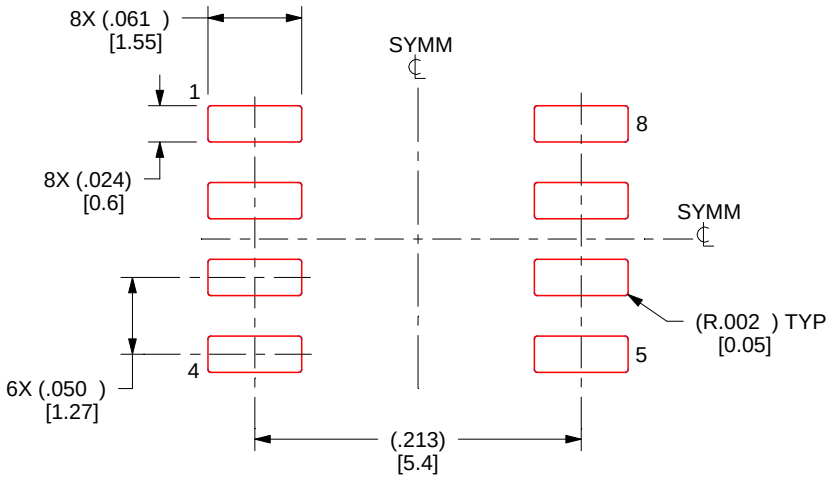

SOLDER PASTE EXAMPLE
BASED ON .005 INCH [0.125 MM] THICK STENCIL
SCALE:8X

4214825/C 02/2019

NOTES: (continued)

8. Laser cutting apertures with trapezoidal walls and rounded corners may offer better paste release. IPC-7525 may have alternate design recommendations.
9. Board assembly site may have different recommendations for stencil design.

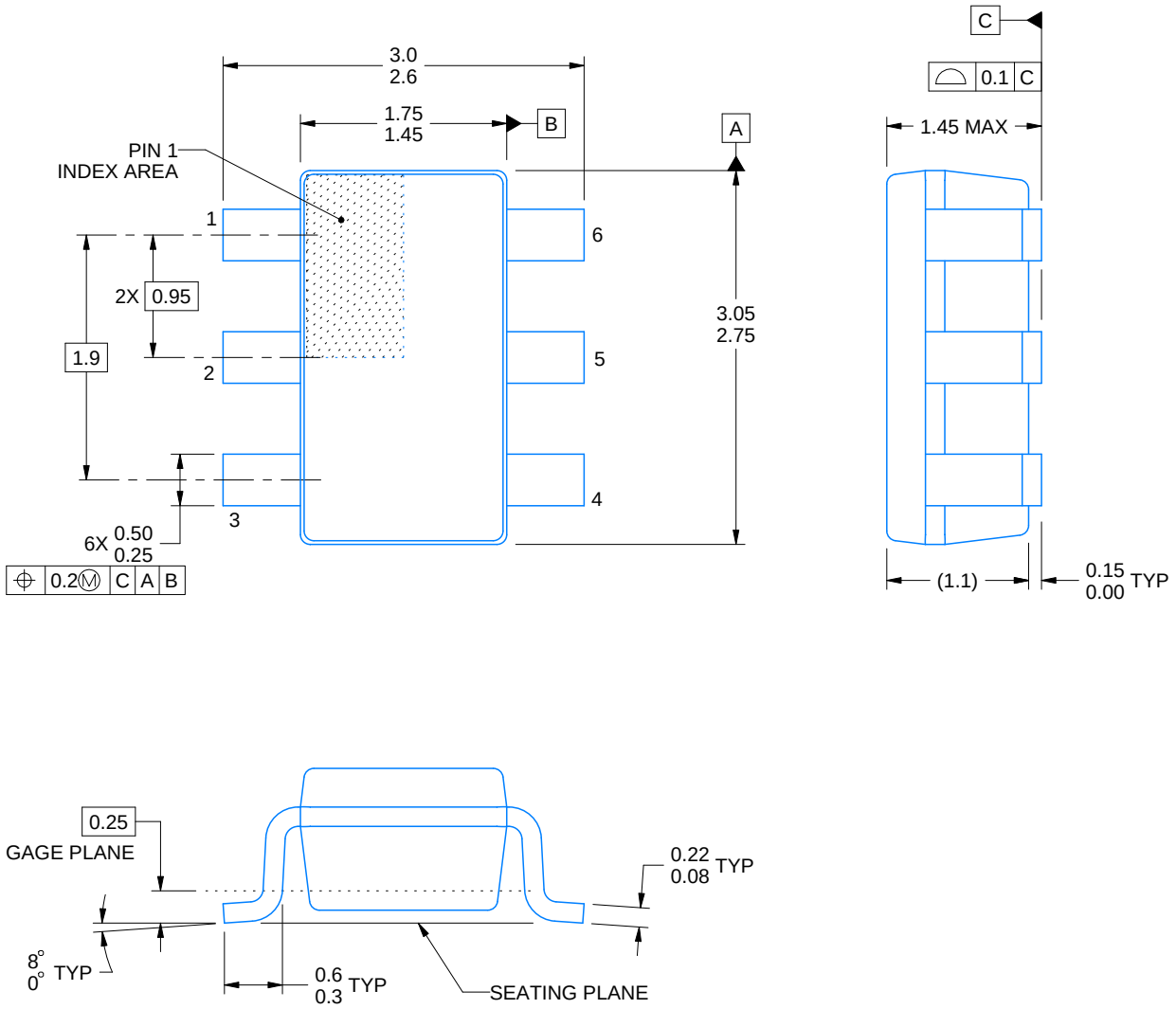

4214840/C 06/2021

NOTES:

1. All linear dimensions are in millimeters. Any dimensions in parenthesis are for reference only. Dimensioning and tolerancing per ASME Y14.5M.
2. This drawing is subject to change without notice.
3. Body dimensions do not include mold flash or protrusion. Mold flash and protrusion shall not exceed 0.25 per side.
4. Leads 1,2,3 may be wider than leads 4,5,6 for package orientation.
5. Refernce JEDEC MO-178.

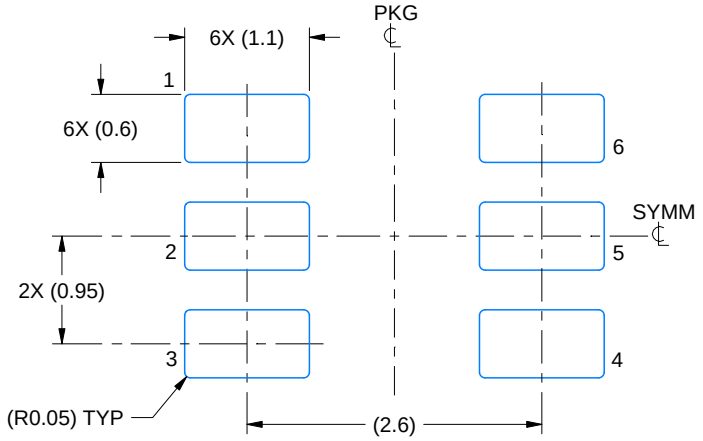

LAND PATTERN EXAMPLE
EXPOSED METAL SHOWN
SCALE:15X

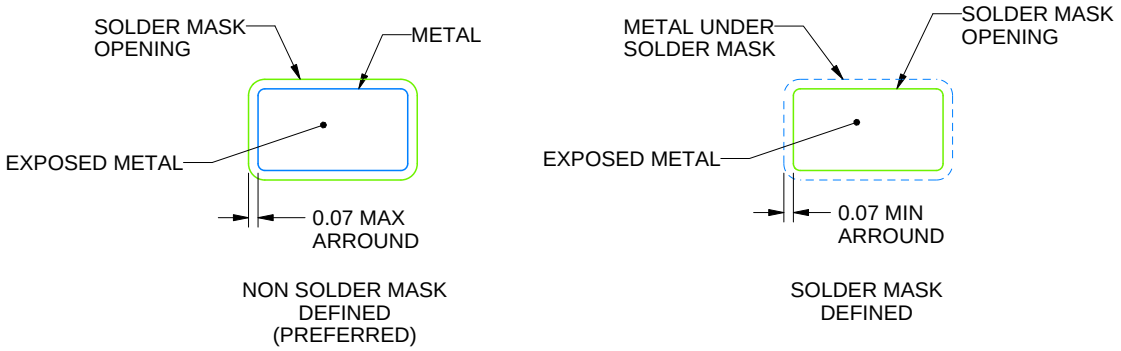

SOLDER MASK DETAILS

4214840/C 06/2021

NOTES: (continued)

6. Publication IPC-7351 may have alternate designs.
7. Solder mask tolerances between and around signal pads can vary based on board fabrication site.

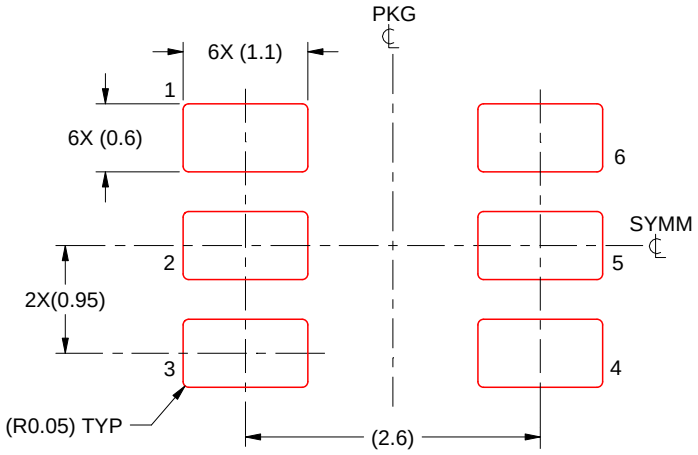

SOLDER PASTE EXAMPLE
BASED ON 0.125 mm THICK STENCIL
SCALE:15X

4214840/C 06/2021

NOTES: (continued)

8. Laser cutting apertures with trapezoidal walls and rounded corners may offer better paste release. IPC-7525 may have alternate design recommendations.
9. Board assembly site may have different recommendations for stencil design.

重要声明和免责声明

TI“按原样”提供技术和可靠性数据（包括数据表）、设计资源（包括参考设计）、应用或其他设计建议、网络工具、安全信息和其他资源，不保证没有瑕疵且不做出任何明示或暗示的担保，包括但不限于对适销性、某特定用途方面的适用性或不侵犯任何第三方知识产权的暗示担保。

这些资源可供使用 TI 产品进行设计的熟练开发人员使用。您将自行承担以下全部责任：(1) 针对您的应用选择合适的 TI 产品，(2) 设计、验证并测试您的应用，(3) 确保您的应用满足相应标准以及任何其他功能安全、信息安全、监管或其他要求。

这些资源如有变更，恕不另行通知。TI 授权您仅可将这些资源用于研发本资源所述的 TI 产品的应用。严禁对这些资源进行其他复制或展示。您无权使用任何其他 TI 知识产权或任何第三方知识产权。您应全额赔偿因在这些资源的使用中对 TI 及其代表造成的任何索赔、损害、成本、损失和债务，TI 对此概不负责。

TI 提供的产品受 TI 的销售条款或 ti.com 上其他适用条款/TI 产品随附的其他适用条款的约束。TI 提供这些资源并不会扩展或以其他方式更改 TI 针对 TI 产品发布的适用的担保或担保免责声明。

TI 反对并拒绝您可能提出的任何其他或不同的条款。

邮寄地址：Texas Instruments, Post Office Box 655303, Dallas, Texas 75265
Copyright © 2022，德州仪器 (TI) 公司