OPT3007 超薄环境光传感器

1 特性

- 采用精密光学滤波，以与人眼匹配：
  - 可阻隔 99%（典型值）以上的红外线 (IR)
- 自动满量程设置功能
- 测量范围：0.01 Lux 至 83,000 Lux
- 23 位有效动态范围，具有自动增益范围设定功能
- 12 种二进制加权满量程范围设置：范围间匹配度 < 0.2%（典型值）
- 低工作电流：1.8μA（典型值）
- 工作温度范围：-40°C 至 +85°C
- 宽电源范围：1.6V 至 3.6V
- 固定的 I^2C 地址
- 可耐受 5.5V 电压的 I/O
- 固定的 I^2C 地址
- 小外形尺寸：
  - 0.856mm × 0.946mm × 0.226mm PicoStar™封装
- OPT3007 是 OPT3001 的缩小版

2 应用

- 智能手表
- 可穿戴电子产品
- 健身手环
- 显示屏背光控制
- 照明控制系统
- 平板电脑和笔记本电脑
- 摄像机

光谱响应：**OPT3007** 和人眼

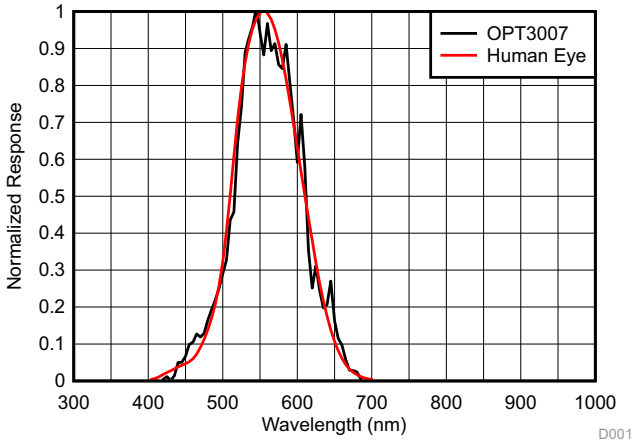

3 说明

OPT3007 是一款用于测量人眼可见光强度的单芯片照度计。OPT3007 采用超小型 PicoStar 封装，因此该器件适用于狭小空间。OPT3007 具有固定的寻址方案，使该器件仅在连接四个引脚的情况下即可工作。因此，PCB 设计人员能够针对主动传感器区域设计更大的开口。

传感器的精密光谱响应与人眼的明视响应高度匹配。OPT3007 具有强烈的红外 (IR) 阻隔作用，在所有光源条件下均可测量人眼的可见光强度。对于需要将传感器安装在深色玻璃下的设计而言，这种红外阻隔功能还有助于保持高精度。OPT3007 通常与背光 IC 或照明控制系统配合使用，能够为用户构建基于光的各项体验，可作为光电二极管、光敏电阻或低性能环境光传感器的理想替代产品。

凭借内置的满量程设置功能，无需手动选择满量程范围即可在 0.01 lux 至 83k lux 范围内进行测量。此功能允许在 23 位有效动态范围内进行光测量。

数字操作可灵活用于系统集成。测量既可连续进行也可单次触发。数字输出通过兼容 I^2C 和 SMBus 的双线制串行接口进行报告。

器件信息(1)

器件型号	封装	封装尺寸（标称值）
OPT3007	PicoStar (6)	0.856mm × 0.946mm × 0.226mm

(1) 要了解所有可用封装，请参见产品说明书末尾的封装选项附录。

框图

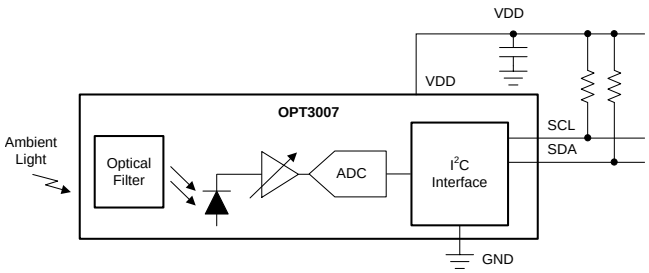

Copyright © 2017, Texas Instruments Incorporated

An IMPORTANT NOTICE at the end of this data sheet addresses availability, warranty, changes, use in safety-critical applications, intellectual property matters and other important disclaimers. PRODUCTION DATA.

目录

1 特性 ... 1
2 应用 ... 1
3 说明 ... 1
4 修订历史记录 ... 2
5 **Pin Configuration and Functions** ... 3
6 **Specifications** ... 4
6.1 Absolute Maximum Ratings ... 4
6.2 ESD Ratings ... 4
6.3 Recommended Operating Conditions ... 4
6.4 Thermal Information ... 4
6.5 Electrical Characteristics ... 5
6.6 Timing Requirements ... 6
6.7 Typical Characteristics ... 7
7 **Detailed Description** ... 10
7.1 Overview ... 10
7.2 Functional Block Diagram ... 10
7.3 Feature Description ... 11
7.4 Device Functional Modes ... 12
7.5 Programming ... 12
7.6 Register Maps ... 15
8 **Application and Implementation** ... 23
8.1 Application Information ... 23
8.2 Typical Application ... 24
8.3 Do's and Don'ts ... 27
9 **Power-Supply Recommendations** ... 27
10 **Layout** ... 28
10.1 Layout Guidelines ... 28
10.2 Soldering and Handling Recommendations ... 28
10.3 Layout Example ... 30
11 器件和文档支持 ... 31
11.1 文档支持 ... 31
11.2 接收文档更新通知 ... 31
11.3 社区资源 ... 31
11.4 商标 ... 31
11.5 静电放电警告 ... 31
11.6 Glossary ... 31
12 机械、封装和可订购信息 ... 31

4 修订历史记录

日期	修订版本	说明
2017 年 8 月	*	初始发行版。

Copyright © 2017, Texas Instruments Incorporated

5 Pin Configuration and Functions

YMF Package
6-Pin PicoStar
Top View

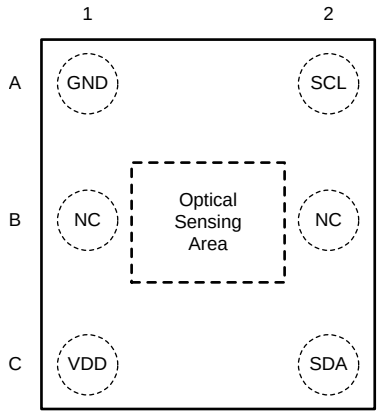

Pin Functions

PIN		TYPE	DESCRIPTION
NO.	NAME		
A1	GND	Power	Ground
B1	NC (1)	—	No connection required
C1	VDD	Power	Device power. Connect to a 1.6-V to 3.6-V supply.
A2	SCL	Digital input	I^2C clock. Connect with a 10-kΩ resistor to a 1.6-V to 5.5-V supply.
B2	NC (1)	—	No connection required
C2	SDA	Digital input/output	I^2C data. Connect with a 10-kΩ resistor to a 1.6-V to 5.5-V supply.

(1) OPT3007 device has a fixed addressing scheme (see *Serial Bus Address*). This enables pin B1 and B2 to remain unconnected which enables creating a bigger opening for the sensor active area can be made wider for optimal device performance.

Copyright © 2017, Texas Instruments Incorporated

6 Specifications

6.1 Absolute Maximum Ratings[(1)]

		MIN	MAX	UNIT
Voltage	VDD to GND	–0.5	6	V
	SDA and SCL to GND	–0.5	6	V
Current into any pin			10	mA
Temperature	Junction		150	°C
	Storage, T_{stg}	–65	150[(2)]	°C

(1) Stresses beyond those listed under *Absolute Maximum Ratings* may cause permanent damage to the device. These are stress ratings only, and do not imply functional operation of the device at these or any other conditions beyond those indicated under *Recommended Operating Conditions*. Exposure to absolute-maximum-rated conditions for extended periods may affect device reliability.
(2) Long exposure to temperatures higher than 105°C can cause package discoloration, spectral distortion, and measurement inaccuracy.

6.2 ESD Ratings

			VALUE	UNIT
$V_{(ESD)}$	Electrostatic discharge	Human-body model (HBM), per ANSI/ESDA/JEDEC JS-001[(1)]	±2000	V
		Charged-device model (CDM), per JEDEC specification JESD22-C101[(2)]	±500	

(1) JEDEC document JEP155 states that 500-V HBM allows safe manufacturing with a standard ESD control process.
(2) JEDEC document JEP157 states that 250-V CDM allows safe manufacturing with a standard ESD control process.

6.3 Recommended Operating Conditions

	MIN	NOM	MAX	UNIT
Operating temperature	–40		85	°C
Operating power-supply voltage	1.6		3.6	V

6.4 Thermal Information

THERMAL METRIC[(1)]		OPT3007 YMF (PicoStar) 6 PINS	UNIT
$R_{\theta JA}$	Junction-to-ambient thermal resistance	122.8	°C/W
$R_{\theta JC(top)}$	Junction-to-case (top) thermal resistance	1.4	°C/W
$R_{\theta JB}$	Junction-to-board thermal resistance	34.9	°C/W
ψ_{JT}	Junction-to-top characterization parameter	0.8	°C/W
ψ_{JB}	Junction-to-board characterization parameter	35.3	°C/W

(1) For more information about traditional and new thermal metrics, see the *Semiconductor and IC Package Thermal Metrics* application report.

Copyright © 2017, Texas Instruments Incorporated

6.5 Electrical Characteristics

At T_A = 25°C, V_{DD} = 3.3 V, 800-ms conversion time (CT = 1)(1), automatic full-scale range (RN[3:0] = 1100b(1)), white LED, and normal-angle incidence of light, unless otherwise specified.

PARAMETER		TEST CONDITIONS		MIN	TYP	MAX	UNIT
OPTICAL							
	Peak irradiance spectral responsivity				550		nm
	Resolution (LSB)	Lowest full-scale range, RN[3:0] = 0000b(1)			0.01		lux
	Full-scale illuminance				83865.6		lux
	Measurement output result	0.64 lux per ADC code, 2620.80 lux full-scale (RN[3:0] = 0110)(1), 2000 lux input(2)		2500	3125	3750	ADC codes
				1600	2000	2400	lux
	Relative accuracy between gain ranges(3)				0.2%		
	Infrared response (850 nm)(2)				0.2%		
	Light source variation (incandescent, halogen, fluorescent)	Bare device, no cover glass			4%		
	Linearity	Input illuminance > 40 lux			2%		
		Input illuminance < 40 lux			5%		
	Measurement drift across temperature	Input illuminance = 2000 lux			0.01		%/°C
	Dark condition, ADC output	0.01 lux per ADC code			0	3	ADC codes
					0	0.03	lux
	Half-power angle	50% of full-power reading			44		degrees
PSRR	Power-supply rejection ratio	V_{DD} at 3.6 V and 1.6 V			0.1		%/V(4)
POWER SUPPLY							
V_{DD}	Operating range			1.6		3.6	V
V_{I^2C}	Operating range of I^2C pull-up resistor	I^2C pullup resistor, $V_{DD} \le V_{I^2C}$		1.6		5.5	V
I_Q	Quiescent current	Dark	Active, V_{DD} = 3.6 V		1.8	2.5	µA
			Shutdown (M[1:0] = 00)(1), V_{DD} = 3.6 V		0.3	0.47	µA
		Full-scale lux	Active, V_{DD} = 3.6 V		3.7		µA
			Shutdown, (M[1:0] = 00)(1)		0.4		µA
POR	Power-on-reset threshold	T_A = 25°C			0.8		V
DIGITAL							
	I/O pin capacitance				3		pF
	Total integration time(5)	(CT = 1)(1), 800-ms mode, fixed lux range		720	800	880	ms
		(CT = 0)(1), 100-ms mode, fixed lux range		90	100	110	ms
V_{IL}	Low-level input voltage (SDA and SCL)			0		0.3 × V_{DD}	V
V_{IH}	High-level input voltage (SDA and SCL)			0.7 × V_{DD}		5.5	V
I_{IL}	Low-level input current (SDA and SCL)				0.01	0.25(6)	µA
V_{OL}	Low-level output voltage (SDA)	I_{OL}= 3 mA				0.32	V
I_{ZH}	Output logic high, high-Z leakage current (SDA)	Pin at V_{DD}			0.01	0.25(6)	µA
TEMPERATURE							
	Specified temperature range			–40		85	°C

(1) Refers to a control field within the configuration register.
(2) Tested with the white LED calibrated to 2k lux and an 850-nm LED.
(3) Characterized by measuring fixed near-full-scale light levels on the higher adjacent full-scale range setting.
(4) PSRR is the percent change of the measured lux output from its current value, divided by the change in power supply voltage, as characterized by results from 3.6-V and 1.6-V power supplies.
(5) The conversion time, from start of conversion until the data are ready to be read, is the integration time plus 3 ms.
(6) The specified leakage current is dominated by the production test equipment limitations. Typical values are much smaller.

Copyright © 2017, Texas Instruments Incorporated

6.6 Timing Requirements(1)

		MIN	TYP	MAX	UNIT
I²C FAST MODE					
f_{SCL}	SCL operating frequency	0.01		0.4	MHz
t_{BUF}	Bus free time between stop and start	1300			ns
t_{HDSTA}	Hold time after repeated start	600			ns
t_{SUSTA}	Setup time for repeated start	600			ns
t_{SUSTO}	Setup time for stop	600			ns
t_{HDDAT}	Data hold time	20		900	ns
t_{SUDAT}	Data setup time	100			ns
t_{LOW}	SCL clock low period	1300			ns
t_{HIGH}	SCL clock high period	600			ns
t_{RC} and t_{FC}	Clock rise and fall time			300	ns
t_{RD} and t_{FD}	Data rise and fall time			300	ns
t_{TIMEO}	Bus timeout period. If the SCL line is held low for this duration of time, the bus state machine is reset.		28		ms
I²C HIGH-SPEED MODE					
f_{SCL}	SCL operating frequency	0.01		2.6	MHz
t_{BUF}	Bus free time between stop and start	160			ns
t_{HDSTA}	Hold time after repeated start	160			ns
t_{SUSTA}	Setup time for repeated start	160			ns
t_{SUSTO}	Setup time for stop	160			ns
t_{HDDAT}	Data hold time	20		140	ns
t_{SUDAT}	Data setup time	20			ns
t_{LOW}	SCL clock low period	240			ns
t_{HIGH}	SCL clock high period	60			ns
t_{RC} and t_{FC}	Clock rise and fall time			40	ns
t_{RD} and t_{FD}	Data rise and fall time			80	ns
t_{TIMEO}	Bus timeout period. If the SCL line is held low for this duration of time, the bus state machine is reset.		28		ms

(1) All timing parameters are referenced to low and high voltage thresholds of 30% and 70%, respectively, of final settled value.

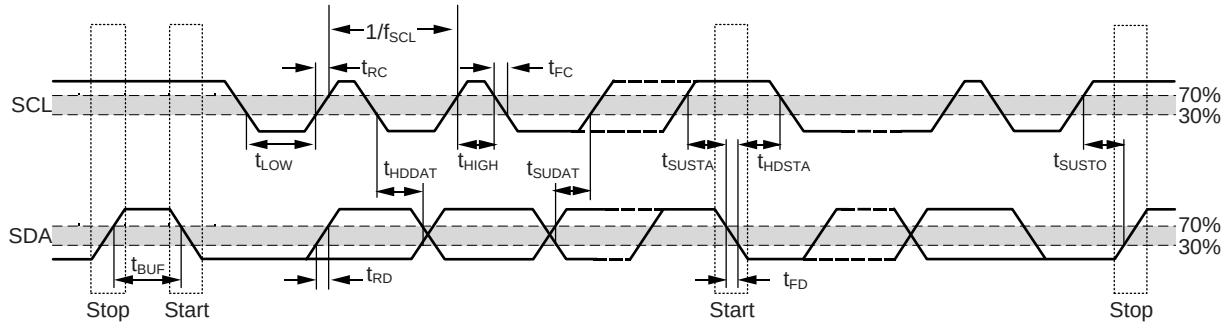

Figure 1. I²C Detailed Timing Diagram

Copyright © 2017, Texas Instruments Incorporated

6.7 Typical Characteristics

At T_A = 25°C, V_{DD} = 3.3 V, 800-ms conversion time (CT = 1), automatic full-scale range (RN[3:0] = 1100b), white LED, and normal-angle incidence of light, unless otherwise specified.

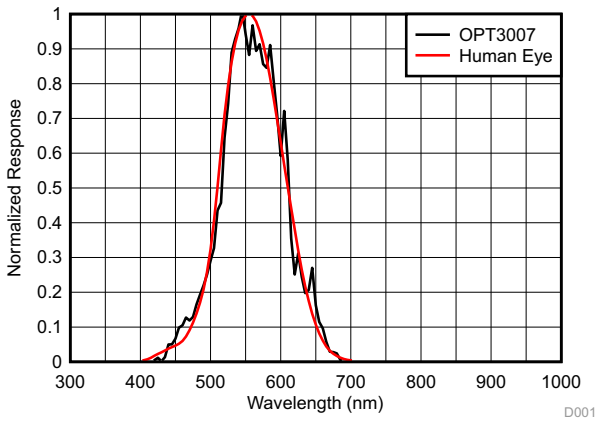

Figure 2. Spectral Response vs Wavelength

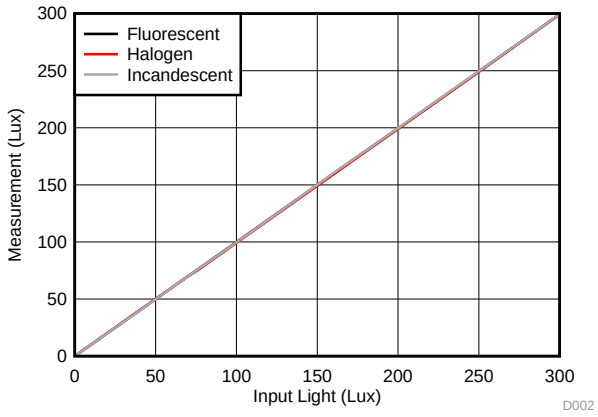

Figure 3. Output Response vs Input Illuminance, Multiple Light Sources (Fluorescent, Halogen, Incandescent)

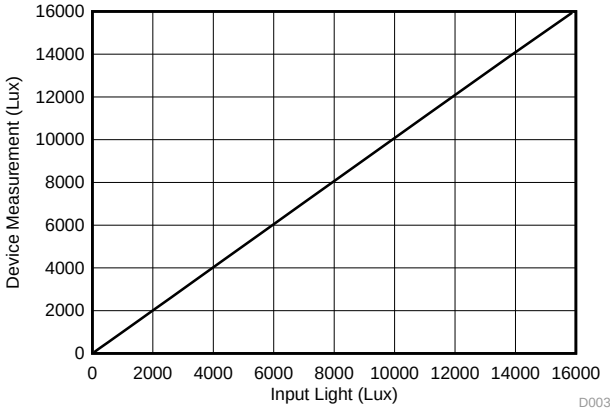

Figure 4. Output Response vs Input Illuminance (Higher Range = 0 Lux to 16k Lux)

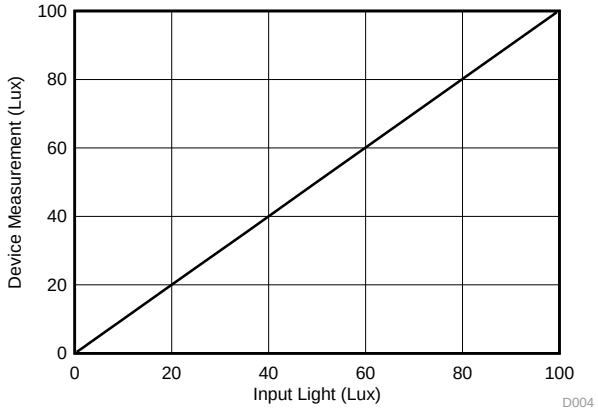

Figure 5. Output Response vs Input Illuminance (Mid Range = 0 Lux to 100 Lux)

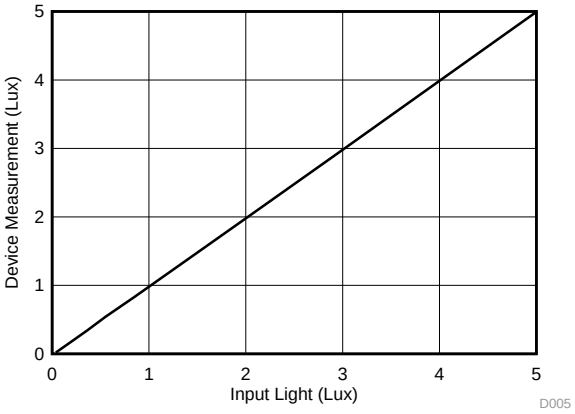

Figure 6. Output Response vs Input Illuminance (Low Range = 0 Lux to 5 Lux)

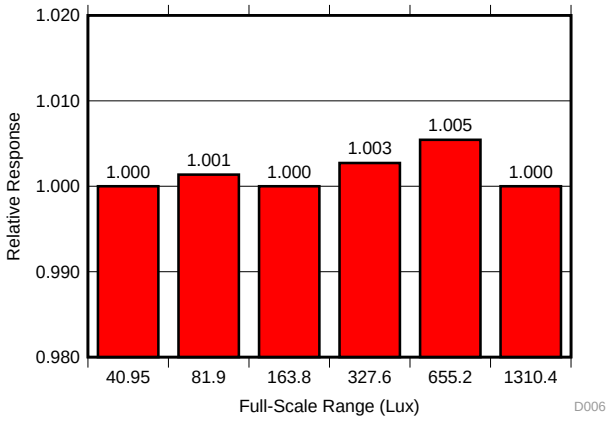

Input illuminance = 30 lux,
normalized to response of 40.95 lux full-scale

Figure 7. Full-Scale-Range Matching (Lowest 7 Ranges)

Typical Characteristics (continued)

At T_A = 25°C, V_{DD} = 3.3 V, 800-ms conversion time (CT = 1), automatic full-scale range (RN[3:0] = 1100b), white LED, and normal-angle incidence of light, unless otherwise specified.

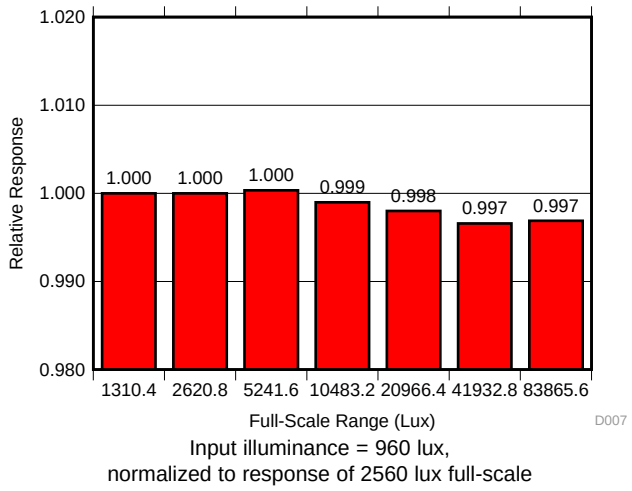

Figure 8. Full-Scale-Range Matching (Highest 6 Ranges)

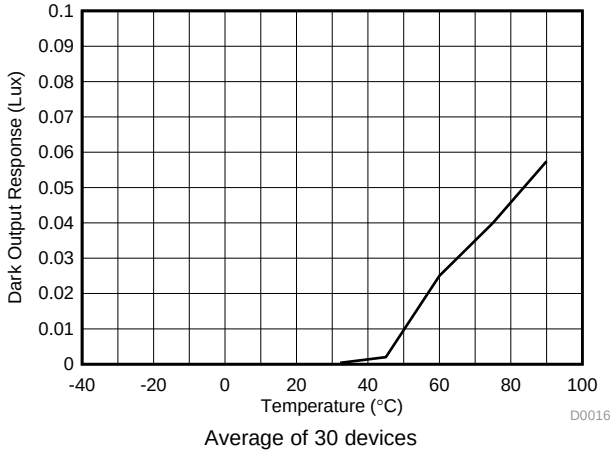

Figure 9. Dark Response vs Temperature

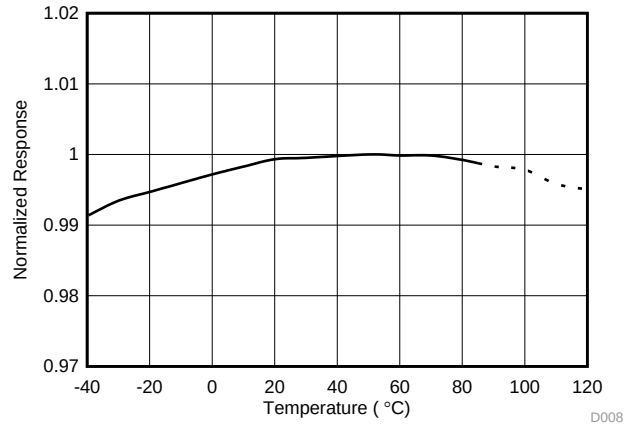

Figure 10. Normalized Response vs Temperature

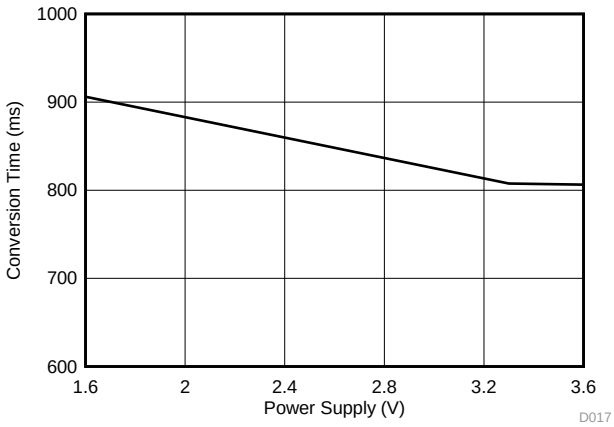

Figure 11. Conversion Time vs Power Supply

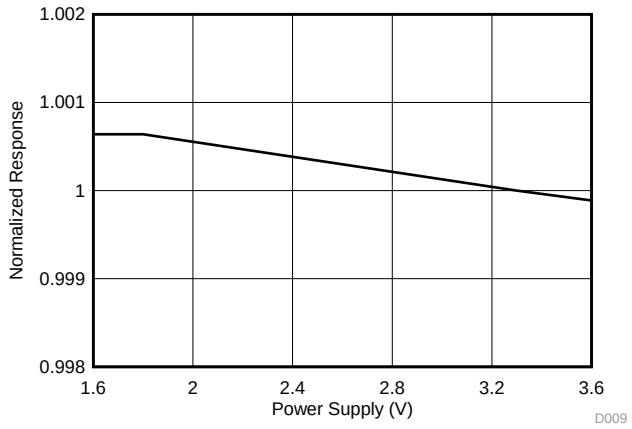

Figure 12. Normalized Response vs Power-Supply Voltage

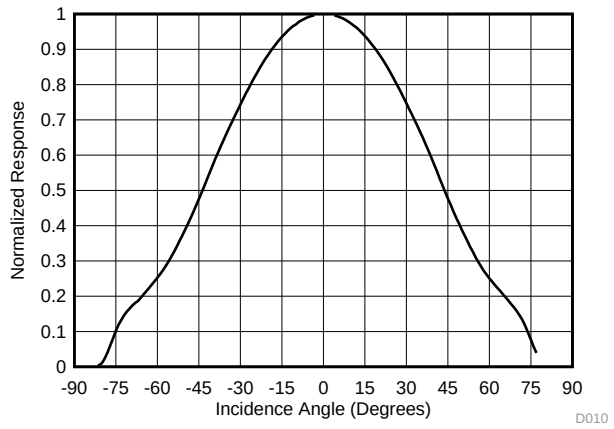

Figure 13. Normalized Response vs Illuminance Angle

Copyright © 2017, Texas Instruments Incorporated

Typical Characteristics (continued)

At T_A = 25°C, V_{DD} = 3.3 V, 800-ms conversion time (CT = 1), automatic full-scale range (RN[3:0] = 1100b), white LED, and normal-angle incidence of light, unless otherwise specified.

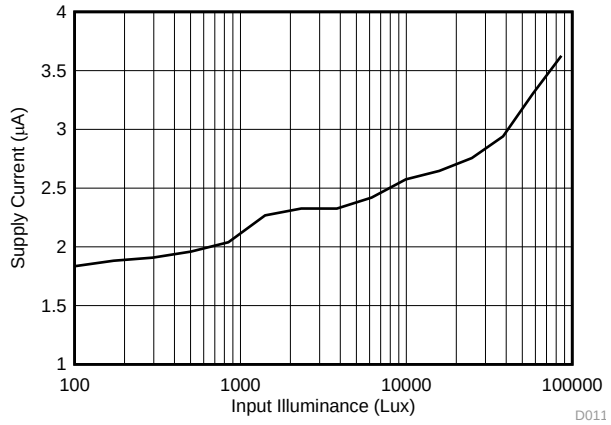

M[1:0] = 10b

Figure 14. Supply Current vs Input Illuminance

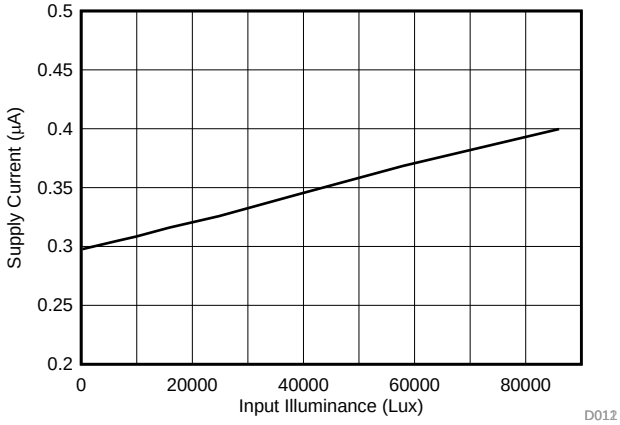

M[1:0] = 00b

Figure 15. Shutdown Current vs Input Illuminance

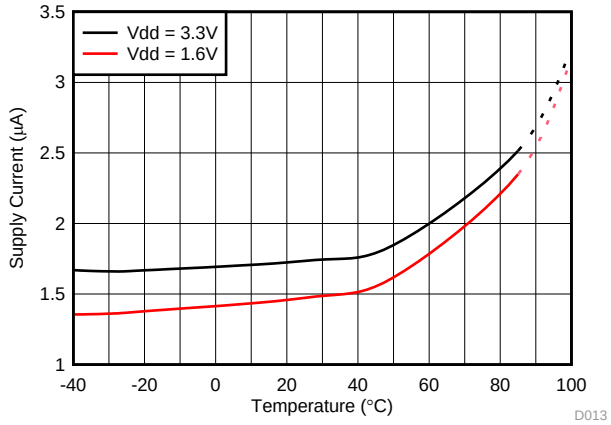

M[1:0] = 10b

Figure 16. Supply Current vs Temperature

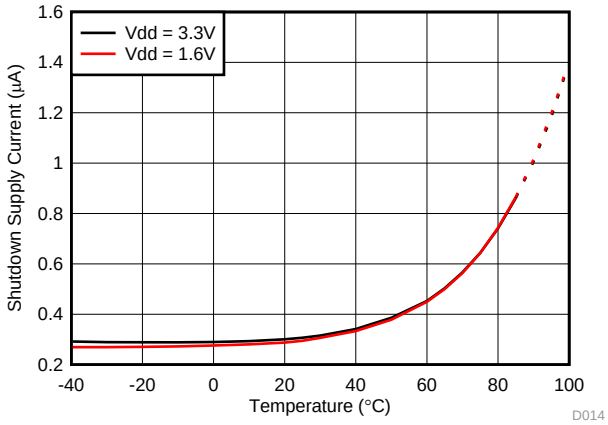

M[1:0] = 00b, input illuminance = 0 lux

Figure 17. Shutdown Current vs Temperature

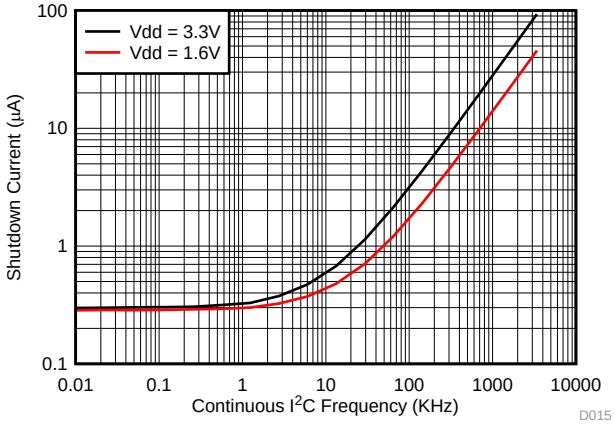

Input illuminance = 80 lux, SCL = SDA,
continuously toggled at I^2C frequency
Note: A typical application runs at a lower duty cycle and thus consumes a lower current.

Figure 18. Supply Current vs Continuous I^2C Frequency

7 Detailed Description

7.1 Overview

The OPT3007 measures the ambient light that illuminates the device. This device measures light with a spectral response very closely matched to the human eye, and with very good infrared rejection.

Matching the sensor spectral response to that of the human eye response is vital because ambient light sensors are used to measure and help create ideal human lighting experiences. Strong rejection of infrared light, which a human does not see, is a crucial component of this matching. This matching makes the OPT3007 especially good for operation underneath windows that are visibly dark, but infrared transmissive.

The OPT3007 is fully self-contained to measure the ambient light and report the result in lux digitally over the I^2C bus.

The OPT3007 can be configured into an automatic full-scale, range-setting mode that always selects the optimal full-scale range setting for the lighting conditions. This mode frees the user from having to program their software for potential iterative cycles of measurement and readjustment of the full-scale range until optimal for any given measurement. The device can be commanded to operate continuously or in single-shot measurement modes.

The device integrates its result over either 100 ms or 800 ms, so the effects of 50-Hz and 60-Hz noise sources from typical light bulbs are nominally reduced to a minimum.

The device starts up in a low-power shutdown state, such that the OPT3007 only consumes active-operation power after being programmed into an active state.

The OPT3007 optical filtering system is not excessively sensitive to non-ideal particles and micro-shadows on the optical surface. This reduced sensitivity is a result of the relatively minor device dependency on uniform-density optical illumination of the sensor area for infrared rejection. Proper optical surface cleanliness is always recommended for best results on all optical devices.

7.2 Functional Block Diagram

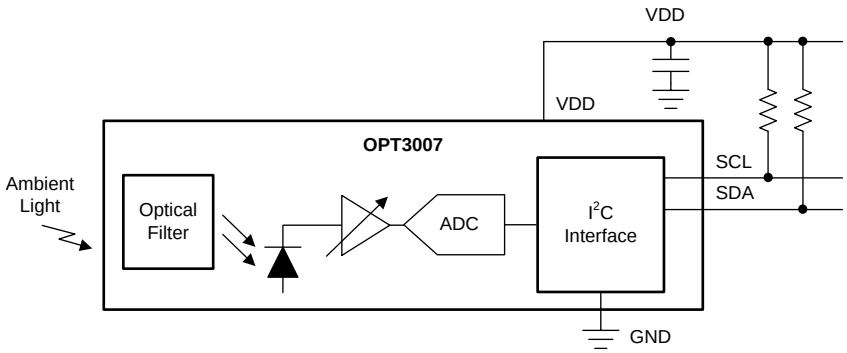

Copyright © 2017, Texas Instruments Incorporated

Copyright © 2017, Texas Instruments Incorporated

7.3 Feature Description

7.3.1 Human Eye Matching

The OPT3007 spectral response closely matches that of the human eye. If the ambient light sensor measurement is used to help create a good human experience, or create optical conditions that are optimal for a human, the sensor must measure the same spectrum of light that a human sees.

The device also has excellent infrared light (IR) rejection. This IR rejection is especially important because many real-world lighting sources have significant infrared content that humans do not see. If the sensor measures infrared light that the human eye does not see, then a true human experience is not accurately represented.

Furthermore, if the ambient light sensor is hidden underneath a dark window (such that the end-product user cannot see the sensor) the infrared rejection of the OPT3007 becomes significantly more important because many dark windows attenuate visible light but transmit infrared light. This attenuation of visible light and lack of attenuation of IR light amplifies the ratio of the infrared light to visible light that illuminates the sensor. Results can still be well matched to the human eye under this condition because of the high infrared rejection of the OPT3007.

7.3.2 Automatic Full-Scale Range Setting

The OPT3007 has an automatic full-scale range setting feature that eliminates the need to predict and set the optimal range for the device. In this mode, the OPT3007 automatically selects the optimal full-scale range for the given lighting condition. The OPT3007 has a high degree of result matching between the full-scale range settings. This matching eliminates the problem of varying results or the need for range-specific, user-calibrated gain factors when different full-scale ranges are chosen. For further details, see the *Automatic Full-Scale Setting Mode* section.

7.3.3 I^2C Bus Overview

The OPT3007 offers compatibility with both I^2C and SMBus interfaces. The I^2C and SMBus protocols are essentially compatible with one another. The I^2C interface is used throughout this document as the primary example with the SMBus protocol specified only when a difference between the two protocols is discussed.

The OPT3007 is connected to the bus with two pins: an SCL clock input pin and an SDA open-drain bidirectional data pin. The bus must be controlled by a master device that generates the serial clock (SCL), controls the bus access, and generates start and stop conditions. To address a specific device, the master initiates a start condition by pulling the data signal line (SDA) from a high logic level to a low logic level while SCL is high. All slaves on the bus shift in the slave address byte on the SCL rising edge, with the last bit indicating whether a read or write operation is intended. During the ninth clock pulse, the slave being addressed responds to the master by generating an acknowledge bit by pulling SDA low.

Data transfer is then initiated and eight bits of data are sent, followed by an acknowledge bit. During data transfer, SDA must remain stable while SCL is high. Any change in SDA while SCL is high is interpreted as a start or stop condition. When all data are transferred, the master generates a stop condition, indicated by pulling SDA from low to high while SCL is high. The OPT3007 includes a 28-ms timeout on the I^2C interface to prevent locking up the bus. If the SCL line is held low for this duration of time, the bus state machine is reset.

7.3.3.1 Serial Bus Address

To communicate with the OPT3007, the master must first initiate an I^2C start command. Then, the master must address slave devices via a slave address byte. The slave address byte consists of a seven bit address *1000101* and a direction bit that indicates whether the action is to be a read or write operation.

7.3.3.2 Serial Interface

The OPT3007 operates as a slave device on both the I^2C bus and SMBus. Connections to the bus are made via the SCL clock input line and the SDA open-drain I/O line. The OPT3007 supports the transmission protocol for standard mode (up to 100 kHz), fast mode (up to 400 kHz), and high-speed mode (up to 2.6 MHz). All data bytes are transmitted most-significant bits first.

The SDA and SCL pins feature integrated spike-suppression filters and Schmitt triggers to minimize the effects of input spikes and bus noise. See the *Electrical Interface* section for further details of the I^2C bus noise immunity.

Copyright © 2017, Texas Instruments Incorporated

7.4 Device Functional Modes

7.4.1 Automatic Full-Scale Setting Mode

The OPT3007 has an automatic full-scale-range setting mode that eliminates the need for a user to predict and set the optimal range for the device. This mode is entered when the configuration register range number field (RN[3:0]) is set to 1100b.

The first measurement that the device takes in auto-range mode is a 10-ms range assessment measurement. The device then determines the appropriate full-scale range to take its first full measurement.

For subsequent measurements, the full-scale range is set by the result of the previous measurement. If a measurement is towards the low side of full-scale, the full-scale range is decreased by one or two settings for the next measurement. If a measurement is towards the upper side of full-scale, the full-scale range is increased by one setting for the next measurement.

If the measurement exceeds the full-scale range, resulting from a fast increasing optical transient event, the current measurement is aborted. This invalid measurement is not reported. If the scale is not at its maximum, the device increases the scale by one step and a new measurement is retaken with that scale. Therefore, during a fast increasing optical transient in this mode, a measurement can possibly take longer to complete and report than indicated by the configuration register conversion time field (CT).

7.5 Programming

The OPT3007 supports the transmission protocol for standard mode (up to 100 kHz), fast mode (up to 400 kHz), and high-speed mode (up to 2.6 MHz). Fast and standard modes are described as the default protocol, referred to as *F/S*. High-speed mode is described in the *High-Speed I²C Mode* section.

7.5.1 Writing and Reading

Accessing a specific register on the OPT3007 is accomplished by writing the appropriate register address during the I²C transaction sequence. Refer to Table 1 for a complete list of registers and their corresponding register addresses. The value for the register address (as shown in Figure 19) is the first byte transferred after the slave address byte with the R/W bit low.

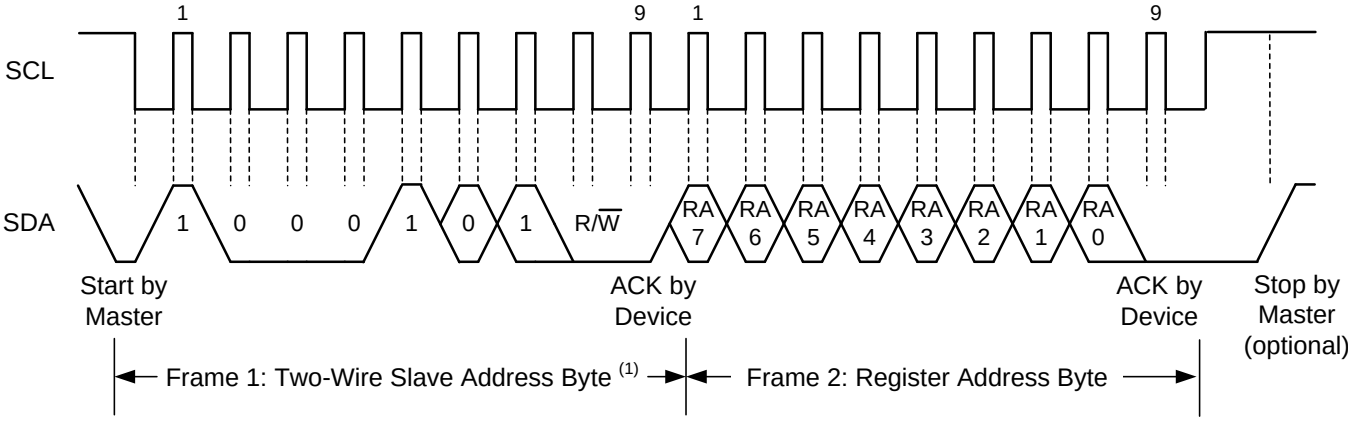

Figure 19. Setting the I²C Register Address

Writing to a register begins with the first byte transmitted by the master. This byte is the slave address with the R/W bit low. The OPT3007 then acknowledges receipt of a valid address. The next byte transmitted by the master is the address of the register that data are to be written to. The next two bytes are written to the register addressed by the register address. The OPT3007 acknowledges receipt of each data byte. The master may terminate the data transfer by generating a start or stop condition.

When reading from the OPT3007, the last value stored in the register address by a write operation determines which register is read during a read operation. To change the register address for a read operation, a new partial I²C write transaction must be initiated. This partial write is accomplished by issuing a slave address byte with the R/W bit low, followed by the register address byte and a stop command. The master then generates a start condition and sends the slave address byte with the R/W bit high to initiate the read command. The next byte is

Copyright © 2017, Texas Instruments Incorporated

Programming (continued)

transmitted by the slave and is the most significant byte of the register indicated by the register address. This byte is followed by an acknowledge from the master; then the slave transmits the least significant byte. The master acknowledges receipt of the data byte. The master may terminate the data transfer by generating a not-acknowledge after receiving any data byte, or by generating a start or stop condition. If repeated reads from the same register are desired, continually sending the register address bytes is not necessary; the OPT3007 retains the register address until that number is changed by the next write operation.

Copyright © 2017, Texas Instruments Incorporated

Programming (continued)

Figure 20 and Figure 21 show the write and read operation timing diagrams, respectively. Note that register bytes are sent most significant byte first, followed by the least significant byte.

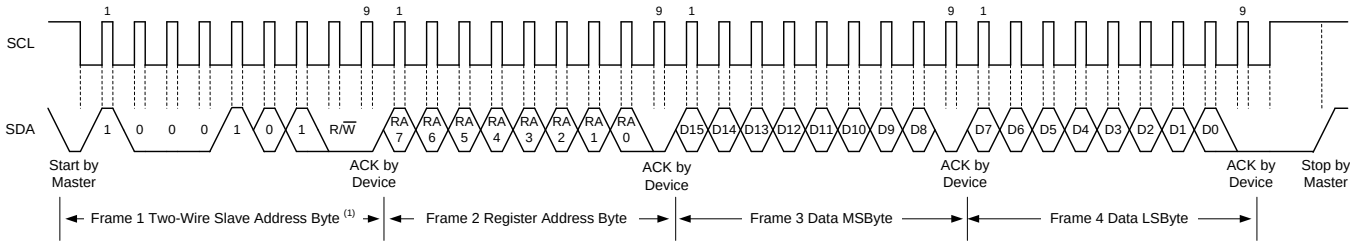

Figure 20. I²C Write Example

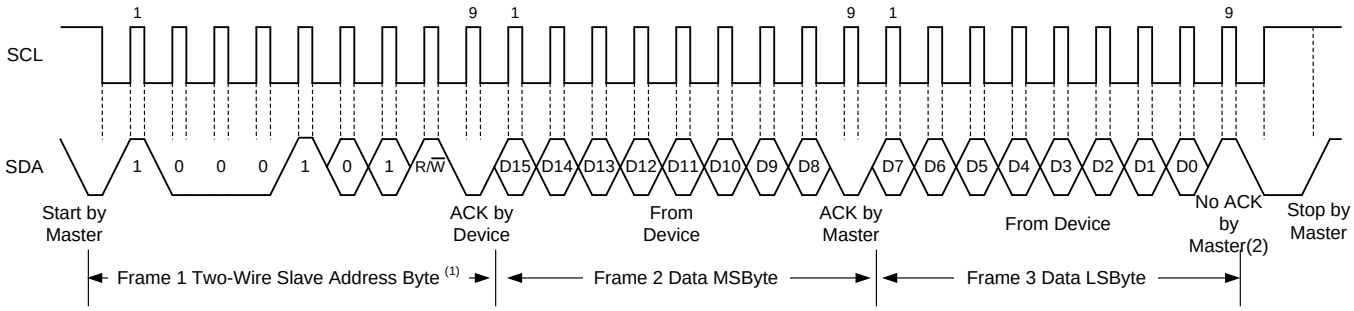

(1) An ACK by the master can also be sent.

Figure 21. I²C Read Example

7.5.1.1 High-Speed I²C Mode

When the bus is idle, both the SDA and SCL lines are pulled high by the pullup resistors or active pullup devices. The master generates a start condition followed by a valid serial byte containing the high-speed (HS) master code 0000 1XXXb. This transmission is made in either standard mode or fast mode (up to 400 kHz). The OPT3007 does not acknowledge the HS master code but does recognize the code and switches its internal filters to support a 2.6-MHz operation.

The master then generates a repeated start condition (a repeated start condition has the same timing as the start condition). After this repeated start condition, the protocol is the same as F/S mode, except that transmission speeds up to 2.6 MHz are allowed. Instead of using a stop condition, use repeated start conditions to secure the bus in HS mode. A stop condition ends the HS mode and switches all internal filters of the OPT3007 to support the F/S mode.

7.5.1.2 General-Call Reset Command

The I²C general-call reset allows the host controller in one command to reset all devices on the bus that respond to the general-call reset command. The general call is initiated by writing to the I²C address 0 (0000 0000b). The reset command is initiated when the subsequent second address byte is 06h (0000 0110b). With this transaction, the device issues an acknowledge bit and sets all of its registers to the power-on-reset default condition.

Copyright © 2017, Texas Instruments Incorporated

7.6 Register Maps

7.6.1 Internal Registers

The device is operated over the I^{2}C bus with registers that contain configuration, status, and result information. All registers are 16 bits long.

There are four main registers: result, configuration, low-limit, and high-limit. There are also two ID registers: manufacturer ID and device ID. Table 1 lists these registers.

Table 1. Register Map

REGISTER	ADDRESS (HEX)(1)	BIT 15	BIT 14	BIT 13	BIT 12	BIT 11	BIT 10	BIT 9	BIT 8	BIT 7	BIT 6	BIT 5	BIT 4	BIT 3	BIT 2	BIT 1	BIT 0
Result	00h	E3	E2	E1	E0	R11	R10	R9	R8	R7	R6	R5	R4	R3	R2	R1	R0
Configuration	01h	RN3	RN2	RN1	RN0	CT	M1	M0	OVF	CRF	FH	FL	L	POL	ME	FC1	FC0
Low Limit	02h	LE3	LE2	LE1	LE0	TL11	TL10	TL9	TL8	TL7	TL6	TL5	TL4	TL3	TL2	TL1	TL0
High Limit	03h	HE3	HE2	HE1	HE0	TH11	TH10	TH9	TH8	TH7	TH6	TH5	TH4	TH3	TH2	TH1	TH0
Manufacturer ID	7Eh	ID15	ID14	ID13	ID12	ID11	ID10	ID9	ID8	ID7	ID6	ID5	ID4	ID3	ID2	ID1	ID0
Device ID	7Fh	DID15	DID14	DID13	DID12	DID11	DID10	DID9	DID8	DID7	DID6	DID5	DID4	DID3	DID2	DID1	DID0

(1) Register offset and register address are used interchangeably.

Copyright © 2017, Texas Instruments Incorporated

7.6.1.1 Register Descriptions

NOTE
Register offset and register address are used interchangeably.

7.6.1.1.1 Result Register (Offset = 00h)

This register contains the result of the most recent light to digital conversion. This 16-bit register has two fields: a 4-bit exponent and a 12-bit mantissa.

Figure 22. Result Register (Read-Only)

15	14	13	12	11	10	9	8
E3	E2	E1	E0	R11	R10	R9	R8
R	R	R	R	R	R	R	R
7	6	5	4	3	2	1	0
R7	R6	R5	R4	R3	R2	R1	R0
R	R	R	R	R	R	R	R

LEGEND: R = Read only

Table 2. Result Register Field Descriptions

Bit	Field	Type	Reset	Description
15:12	E[3:0]	R	0h	**Exponent.** These bits are the exponent bits. Table 3 provides further details.
11:0	R[11:0]	R	000h	**Fractional result.** These bits are the result in straight binary coding (zero to full-scale).

Table 3. Full-Scale Range and LSB Size as a Function of Exponent Level

E3	E2	E1	E0	FULL-SCALE RANGE (lux)	LSB SIZE (lux per LSB)
0	0	0	0	40.95	0.01
0	0	0	1	81.90	0.02
0	0	1	0	163.80	0.04
0	0	1	1	327.60	0.08
0	1	0	0	655.20	0.16
0	1	0	1	1310.40	0.32
0	1	1	0	2620.80	0.64
0	1	1	1	5241.60	1.28
1	0	0	0	10483.20	2.56
1	0	0	1	20966.40	5.12
1	0	1	0	41932.80	10.24
1	0	1	1	83865.60	20.48

The formula to translate this register into lux is given in Equation 1:

lux = LSB_Size × R[11:0]

where

- $LSB_Size = 0.01 \times 2^{E[3:0]}$ (1)

LSB_Size can also be taken from Table 3. The complete lux equation is shown in Equation 2:

$$lux = 0.01 \times (2^{E[3:0]}) \times R[11:0] \quad (2)$$

A series of result register output examples with the corresponding LSB weight and resulting lux are given in Table 4. Note that many combinations of exponents (E[3:0]) and fractional results (R[11:0]) can map onto the same lux result, as shown in the examples of Table 4.

Copyright © 2017, Texas Instruments Incorporated

Table 4. Examples of Decoding the Result Register into lux

RESULT REGISTER (BITS 15:0, BINARY)	EXPONENT (E[3:0], HEX)	FRACTIONAL RESULT (R[11:0], HEX)	LSB WEIGHT (LUX, DECIMAL)	RESULTING LUX (DECIMAL)
0000 0000 0000 0001b	00h	001h	0.01	0.01
0000 1111 1111 1111b	00h	FFFh	0.01	40.95
0011 0100 0101 0110b	03h	456h	0.08	88.80
0111 1000 1001 1010b	07h	89Ah	1.28	2818.56
1000 1000 0000 0000b	08h	800h	2.56	5242.88
1001 0100 0000 0000b	09h	400h	5.12	5242.88
1010 0010 0000 0000b	0Ah	200h	10.24	5242.88
1011 0001 0000 0000b	0Bh	100h	20.48	5242.88
1011 0000 0000 0001b	0Bh	001h	20.48	20.48
1011 1111 1111 1111b	0Bh	FFFh	20.48	83865.60

Note that the exponent field can be disabled (set to zero) by enabling the exponent mask (configuration register, ME field = 1) and manually programming the full-scale range (configuration register, RN[3:0] < 1100b (0Ch)), allowing for simpler operation in a manually-programmed, full-scale mode. Calculating lux from the result register contents only requires multiplying the result register by the LSB weight (in lux) associated with the specific programmed full-scale range (see Table 3). See the *Low-Limit Register* for details.

See the configuration register conversion time field (CT, bit 11) description for more information on lux resolution as a function of conversion time.

7.6.1.1.2 Configuration Register (Offset = 01h) [Reset = C810h]

This register controls the major operational modes of the device. This register has 11 fields, which are documented below. If a measurement conversion is in progress when the configuration register is written, the active measurement conversion immediately aborts. If the new configuration register directs a new conversion, that conversion is subsequently started.

Figure 23. Configuration Register

15	14	13	12	11	10	9	8
RN3	RN2	RN1	RN0	CT	M1	M0	OVF
R/W	R/W	R/W	R/W	R/W	R/W	R/W	R
7	6	5	4	3	2	1	0
CRF	FH	FL	L	POL	ME	FC1	FC0
R	R	R	R/W	R/W	R/W	R/W	R/W

LEGEND: R/W = Read/Write; R = Read only

Table 5. Configuration Register Field Descriptions

BIT	FIELD	TYPE	RESET	DESCRIPTION
15:12	RN[3:0]	R/W	1100b	**Range number field (read or write).** The range number field selects the full-scale lux range of the device. The format of this field is the same as the result register exponent field (E[3:0]); see Table 3. When RN[3:0] is set to 1100b (0Ch), the device operates in automatic full-scale setting mode, as described in the *Automatic Full-Scale Setting Mode* section. In this mode, the automatically chosen range is reported in the result exponent (register 00h, E[3:0]). The device powers up as 1100 in automatic full-scale setting mode. Codes 1101b, 1110b, and 1111b (0Dh, 0Eh, and 0Fh) are reserved for future use.
11	CT	R/W	1b	**Conversion time field (read or write).** The conversion time field determines the length of the light to digital conversion process. The choices are 100 ms and 800 ms. A longer integration time allows for a lower noise measurement. The conversion time also relates to the effective resolution of the data conversion process. The 800-ms conversion time allows for the fully specified lux resolution. The 100-ms conversion time with full-scale ranges above 0101b for E[3:0] in the result and configuration registers also allows for the fully specified lux resolution. The 100-ms conversion time with full-scale ranges below and including 0101b for E[3:0] can reduce the effective result resolution by up to three bits, as a function of the selected full-scale range. Range 0101b reduces by one bit. Ranges 0100b, 0011b, 0010b, and 0001b reduces by two bits. Range 0000b reduces by three bits. The result register format and associated LSB weight does not change as a function of the conversion time. 0 = 100 ms 1 = 800 ms
10:9	M[1:0]	R/W	00b	**Mode of conversion operation field (read or write).** The mode of conversion operation field controls whether the device is operating in continuous conversion, single-shot, or low-power shutdown mode. The default is 00b (shutdown mode), such that upon power-up, the device only consumes operational level power after appropriately programming the device. When single-shot mode is selected by writing 01b to this field, the field continues to read 01b while the device is actively converting. When the single-shot conversion is complete, the mode of conversion operation field is automatically set to 00b and the device is shut down. 00 = Shutdown (default) 01 = Single-shot 10, 11 = Continuous conversions

Copyright © 2017, Texas Instruments Incorporated

Table 5. Configuration Register Field Descriptions (continued)

BIT	FIELD	TYPE	RESET	DESCRIPTION
8	OVF	R	0b	**Overflow flag field (read-only).** The overflow flag field indicates when an overflow condition occurs in the data conversion process, typically because the light illuminating the device exceeds the programmed full-scale range of the device. Under this condition OVF is set to 1, otherwise OVF remains at 0. The field is reevaluated on every measurement. If the full-scale range is manually set (RN[3:0] field < 1100b), the overflow flag field can be set while the result register reports a value less than full-scale. This result occurs if the input light has a temporary high spike level that temporarily overloads the integrating ADC converter circuitry but returns to a level within range before the conversion is complete. Thus, the overflow flag reports a possible error in the conversion process. This behavior is common to integrating-style converters. If the full-scale range is automatically set (RN[3:0] field = 1100b), the only condition that sets the overflow flag field is if the input light is beyond the full-scale level of the entire device. When there is an overflow condition and the full-scale range is not at maximum, the OPT3007 aborts its current conversion, sets the full-scale range to a higher level, and starts a new conversion. The flag is set at the end of the process to indicate a scale increase and that a new measurement is being taken. This process repeats until there is either no overflow condition or until the full-scale range is set to its maximum range.
7	CRF	R	0b	**Conversion ready field (read-only).** The conversion ready field indicates when a conversion completes. The field is set to 1 at the end of a conversion and is cleared (set to 0) when the configuration register is subsequently read or written with any value except one containing the shutdown mode (mode of operation field, M[1:0] = 00b). Writing a shutdown mode does not affect the state of this field.
6	FH	R	0b	**Flag high field (read-only).** The flag high field (FH) identifies that the result of a conversion is larger than a specified level of interest. FH is set to 1 when the result is larger than the level in the high-limit register (register address 03h) for a consecutive number of measurements defined by the fault count field (FC[1:0]).
5	FL	R	0b	**Flag low field (read-only).** The flag low field (FL) identifies that the result of a conversion is smaller than a specified level of interest. FL is set to 1 when the result is smaller than the level in the low-limit register (register address 02h) for a consecutive number of measurements defined by the fault count field (FC[1:0]).
4	L	R	1b	Unused
2	ME	R/W	0b	**Mask exponent field (read or write).** The mask exponent field forces the result register exponent field (register 00h, bits E[3:0]) to 0000b when the full-scale range is manually set, which can simplify the processing of the result register when the full-scale range is manually programmed. This behavior occurs when the mask exponent field is set to 1 and the range number field (RN[3:0]) is set to less than 1100b. Note that the masking is only performed to the result register.
1:0	FC[1:0]	R/W	00b	**Fault count field (read or write).** The fault count field instructs the device as to how many consecutive fault events are required to trigger the interrupt reporting mechanisms: the flag high field (FH) and the flag low field (FL). The fault events are described in the flag high field (FH), and flag low field (FL) descriptions. 00 = One fault count (default) 01 = Two fault counts 10 = Four fault counts 11 = Eight fault counts

Copyright © 2017, Texas Instruments Incorporated

7.6.1.1.3 Low-Limit Register (Offset = 02h) [Reset = C0000h]

This register sets the lower comparison limit for the interrupt reporting mechanisms: the flag high field (FH) and the flag low field (FL).

Figure 24. Low-Limit Register

15	14	13	12	11	10	9	8
LE3	LE2	LE1	LE0	TL11	TL10	TL9	TL8
R/W	R/W	R/W	R/W	R/W	R/W	R/W	R/W
7	6	5	4	3	2	1	0
TL7	TL6	TL5	TL4	TL3	TL2	TL1	TL0
R/W	R/W	R/W	R/W	R/W	R/W	R/W	R/W

LEGEND: R/W = Read/Write

Table 6. Low-Limit Register Field Descriptions

BIT	FIELD	TYPE	RESET	DESCRIPTION
15:12	LE[3:0]	R/W	0h	**Exponent.** These bits are the exponent bits. Table 7 provides further details.
11:0	TL[11:0]	R/W	000h	**Result.** These bits are the result in straight binary coding (zero to full-scale).

The format of this register is nearly identical to the format of the result register described in the *Result Register*. The low-limit register exponent (LE[3:0]) is similar to the result register exponent (E[3:0]). The low-limit register result (TL[11:0]) is similar to result register result (R[11:0]).

The equation to translate this register into the lux threshold is given in Equation 3, which is similar to the equation for the result register, Equation 2.

$$\text{lux} = 0.01 \times (2^{LE[3:0]}) \times TL[11:0] \quad (3)$$

Table 7 gives the full-scale range and LSB size as it applies to the low-limit register. The detailed discussion and examples given in for the *Result Register* apply to the low-limit register as well.

Table 7. Full-Scale Range and LSB Size as a Function of Exponent Level

LE3	LE2	LE1	LE0	FULL-SCALE RANGE (lux)	LSB SIZE (lux per LSB)
0	0	0	0	40.95	0.01
0	0	0	1	81.90	0.02
0	0	1	0	163.80	0.04
0	0	1	1	327.60	0.08
0	1	0	0	655.20	0.16
0	1	0	1	1310.40	0.32
0	1	1	0	2620.80	0.64
0	1	1	1	5241.60	1.28
1	0	0	0	10483.20	2.56
1	0	0	1	20966.40	5.12
1	0	1	0	41932.80	10.24
1	0	1	1	83865.60	20.48

NOTE

The result and limit registers are all converted into lux values internally for comparison. These registers can have different exponent fields. However, when using a manually-set full-scale range (configuration register, RN < 0Ch, with mask enable (ME) active), programming the manually-set full-scale range into the LE[3:0] and HE[3:0] fields can simplify the choice of programming the register. This simplification results in the user only having to think about the fractional result and not the exponent part of the result.

Copyright © 2017, Texas Instruments Incorporated

7.6.1.1.4 High-Limit Register (Offset = 03h) [Reset = BFFFh]

The high-limit register sets the upper comparison limit for the interrupt reporting mechanisms: the flag high field (FH) and the flag low field (FL). The format of this register is almost identical to the format of the low-limit register (described in the *Low-Limit Register*) and the result register (described in the *Result Register*). To explain the similarity in more detail, the high-limit register exponent (HE[3:0]) is similar to the low-limit register exponent (LE[3:0]) and the result register exponent (E[3:0]). The high-limit register result (TH[11:0]) is similar to the low-limit result (TH[11:0]) and the result register result (R[11:0]). Note that the comparison of the high-limit register with the result register is unaffected by the ME bit.

When using a manually-set, full-scale range with the mask enable (ME) active, programming the manually-set, full-scale range into the HE[3:0] bits can simplify the choice of values required to program into this register. The formula to translate this register into lux is similar to Equation 3. The full-scale values are similar to Table 3.

Figure 25. High-Limit Register

15	14	13	12	11	10	9	8
HE3	HE2	HE1	HE0	TH11	TH10	TH9	TH8
R/W	R/W	R/W	R/W	R/W	R/W	R/W	R/W
7	6	5	4	3	2	1	0
TH7	TH6	TH5	TH4	TH3	TH2	TH1	TH0
R/W	R/W	R/W	R/W	R/W	R/W	R/W	R/W

LEGEND: R/W = Read/Write

Table 8. High-Limit Register Field Descriptions

BIT	FIELD	TYPE	RESET	DESCRIPTION
15:12	HE[3:0]	R/W	Bh	**Exponent.** These bits are the exponent bits.
11:0	TH[11:0]	R/W	FFFh	**Result.** These bits are the result in straight binary coding (zero to full-scale).

Copyright © 2017, Texas Instruments Incorporated

7.6.1.1.5 Manufacturer ID Register (Offset = 7Eh) [Reset = 5449h]

This register is intended to help uniquely identify the device.

Figure 26. Manufacturer ID Register

15	14	13	12	11	10	9	8
ID15	ID14	ID13	ID12	ID11	ID10	ID9	ID8
R	R	R	R	R	R	R	R
7	6	5	4	3	2	1	0
ID7	ID6	ID5	ID4	ID3	ID2	ID1	ID0
R	R	R	R	R	R	R	R

LEGEND: R = Read only

Table 9. Manufacturer ID Register Field Descriptions

BIT	FIELD	TYPE	RESET	DESCRIPTION
15:0	ID[15:0]	R	5449h	**Manufacturer ID.** The manufacturer ID reads 5449h. In ASCII code, this register reads *TI*.

7.6.1.1.6 Device ID Register (Offset = 7Fh) [Reset = 3001h]

This register is also intended to help uniquely identify the device.

Figure 27. Device ID Register

15	14	13	12	11	10	9	8
DID15	DID14	DID13	DID12	DID11	DID10	DID9	DID8
R	R	R	R	R	R	R	R
7	6	5	4	3	2	1	0
DID7	DID6	DID5	DID4	DID3	DID2	DID1	DID0
R	R	R	R	R	R	R	R

LEGEND: R = Read only

Table 10. Device ID Register Field Descriptions

BIT	FIELD	TYPE	RESET	DESCRIPTION
15:0	DID[15:0]	R	3001h	**Device ID.** The device ID reads 3001h.

Copyright © 2017, Texas Instruments Incorporated

8 Application and Implementation

NOTE

Information in the following applications sections is not part of the TI component specification, and TI does not warrant its accuracy or completeness. TI's customers are responsible for determining suitability of components for their purposes. Customers should validate and test their design implementation to confirm system functionality.

8.1 Application Information

Ambient light sensors are used in a wide variety of applications that require control as a function of ambient light. Because ambient light sensors nominally match the human eye spectral response, they are superior to photodiodes when the goal is to create an experience for human beings. Very common applications include display optical-intensity control and industrial or home lighting control.

There are two categories of interface to the OPT3007: electrical and optical.

8.1.1 Electrical Interface

The electrical interface is quite simple, as illustrated in Figure 28. Connect the OPT3007 I^2C SDA and SCL pins to the same pins of an applications processor, microcontroller, or other digital processor. Connect pullup resistors between a power supply appropriate for digital communication and the SDA and SCL pins (because they have open-drain output structures).The resistor choice can be optimized in conjunction to the bus capacitance to balance the system speed, power, noise immunity, and other requirements.

The power supply and grounding considerations are discussed in the *Power-Supply Recommendations* section.

Although spike suppression is integrated in the SDA and SCL pin circuits, use proper layout practices to minimize the amount of coupling into the communication lines. One possible introduction of noise occurs from capacitively coupling signal edges between the two communication lines themselves. Another possible noise introduction comes from other switching noise sources present in the system, especially for long communication lines. In noisy environments, shield communication lines to reduce the possibility of unintended noise coupling into the digital I/O lines that could be incorrectly interpreted.

8.1.2 Optical Interface

The optical interface is physically located on the same side of the device as the electrical interface, as shown in the *Sensing Area* of the mechanical packages at the end of this data sheet. At a system level, this configuration requires that the light that illuminates the sensor must come through the PCB or FPCB. Typically, the best solution is to create a cutout area in the PCB. Other solutions are possible, but with associated design tradeoffs. This cutout must be carefully designed because the dimensions and tolerances impact the net-system, optical field-of-view performance. The design of this cutout is discussed more in the *Design Requirements* section.

Physical components, such as a plastic housing and a window that allows light from outside of the design to illuminate the sensor (see Figure 29), can help protect the OPT3007 and neighboring circuitry. Sometimes, a dark or opaque window is used to further enhance the visual appeal of the design by hiding the sensor from view. This window material is typically transparent plastic or glass.

Any physical component that affects the light that illuminates the sensing area of a light sensor also affects the performance of that light sensor. Therefore, for optimal performance, make sure to understand and control the effect of these components. Design a window width and height to permit light from a sufficient field of view to illuminate the sensor. For best performance, use a field of view of at least ±35°, or ideally ±45° or more. Understanding and designing the field of view is discussed further in application report *OPT3001: Ambient Light Sensor Application Guide* (SBEA002).

The visible-spectrum transmission for dark windows typically ranges between 5% to 30%, but can be less than 1%. Specify a visible-spectrum transmission as low as, but no more than, necessary to achieve sufficient visual appeal because decreased transmission decreases the available light for the sensor to measure. The windows are made dark by either applying an ink to a transparent window material, or including a dye or other optical substance within the window material itself. This attenuating transmission in the visible spectrum of the window creates a ratio between the light on the outside of the design and the light that is measured by the OPT3007. To accurately measure the light outside of the design, compensate the OPT3007 measurement for this ratio.

Copyright © 2017, Texas Instruments Incorporated

Application Information (continued)

Ambient light sensors are used to help create ideal lighting experiences for humans; therefore, the matching of the sensor spectral response to that of the human eye response is vital. Infrared light is not visible to the human eye, and can interfere with the measurement of visible light when sensors lack infrared rejection. Therefore, the ratio of visible light to interfering infrared light affects the accuracy of any practical system that represents the human eye. The strong rejection of infrared light by the OPT3007 allows measurements consistent with human perception under high-infrared lighting conditions, such as from incandescent, halogen, or sunlight sources.

Although the inks and dyes of dark windows serve their primary purpose of being minimally transmissive to visible light, some inks and dyes can also be very transmissive to infrared light. The use of these inks and dyes further decreases the ratio of visible to infrared light, and thus decreases sensor measurement accuracy. However, because of the excellent infrared rejection of the OPT3007, this effect is minimized, and good results are achieved under a dark window with similar spectral responses to those shown in Figure 31.

For best accuracy, avoid grill-like window structures, unless the designer understands the optical effects sufficiently. These grill-like window structures create a nonuniform illumination pattern at the sensor that make light measurement results vary with placement tolerances and angle of incidence of the light. If a grill-like structure is desired, the OPT3007 is an excellent sensor choice because it is minimally sensitive to illumination uniformity issues disrupting the measurement process.

Light pipes can appear attractive for aiding in the optomechanical design that brings light to the sensor; however, do not use light pipes with any ambient light sensor unless the system designer fully understands the ramifications of the optical physics of light pipes within the full context of his design and objectives.

8.2 Typical Application

Measuring the ambient light with the OPT3007 mounted on a flexible printed-circuit board (FPCB) is described in this section. The schematic for this design is shown in Figure 28.

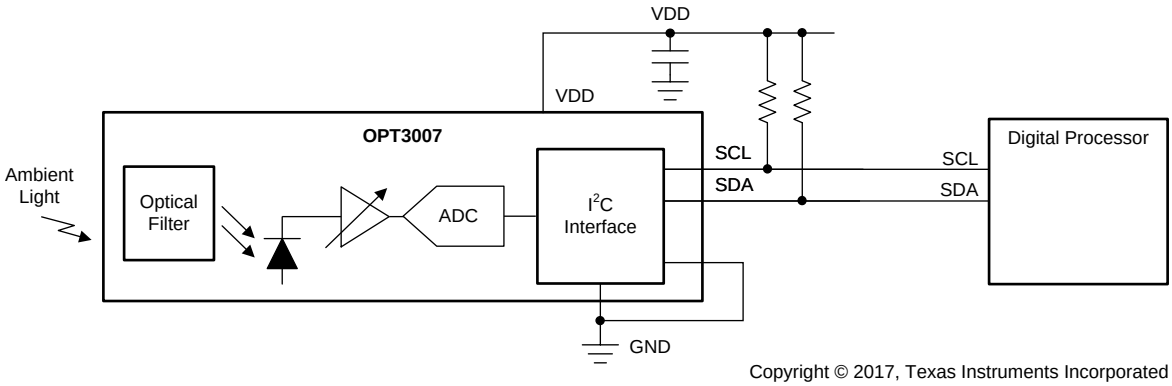

Figure 28. Measuring Ambient Light on an FPCB

Copyright © 2017, Texas Instruments Incorporated

Typical Application (continued)

8.2.1 Design Requirements

This design focuses on the field of view, or angular response, of an OPT3007 mounted on an FPCB with an area cut out that permits light to illuminate the sensor. As a result of the geometry of this cutout, the system field of view (angular response) depends on the axis of rotation. One axis of rotation has a less restricted field of view, and the other axis of rotation has a more restricted field of view. The basic requirements of this design are:

- Mount the OPT3007 onto an FPCB with a cutout that allows light to illuminate the sensor.
- The field of view along the axis of rotation with the less restricted field of view must match the device performance.
- The field of view for the more restricted axis of rotation must be minimum of ±30°.

Field of view is traditionally defined as the angle at which the angular response is 50% of the maximum value of the system response.

8.2.2 Detailed Design Procedure

8.2.2.1 Optomechanical Design

After completing the electrical design (see Figure 28), the next task is the optomechanical design of the FPCB cutout. Design this cutout in conjunction with the tolerance capabilities of the FPCB manufacturer. Or, conversely, choose the FPCB manufacturer for its capabilities of optimally creating this cutout. A semi-rectangular shape of the cutout, created with a standard FPCB laser, is presented here. There are many alternate approaches with different cost, tolerance, and performance tradeoffs.

An image of the created FPCB with the rectangular cutout is shown in Figure 29. The long (vertical) direction of the cutout obviously has no effect on the angular response because any shadows created from the FPCB do not come near the sensor. The long cutout direction defines the axis of rotation with the less restricted field of view. The narrow (horizontal) direction of the cutout, which is limited by the electrical connections to OPT3007, can create shadows that can have a minor impact on the angular response. The narrow cutout direction defines the axis of rotation of the more restricted view. The possibility of shadows are illustrated in Figure 30, a cross-sectional diagram showing the OPT3007 device, with the sensing area, soldered to the FPCB with the cutout.

Figure 29. Image of FPCB With OPT3007 Mounted, Receiving Light Through the Cutout

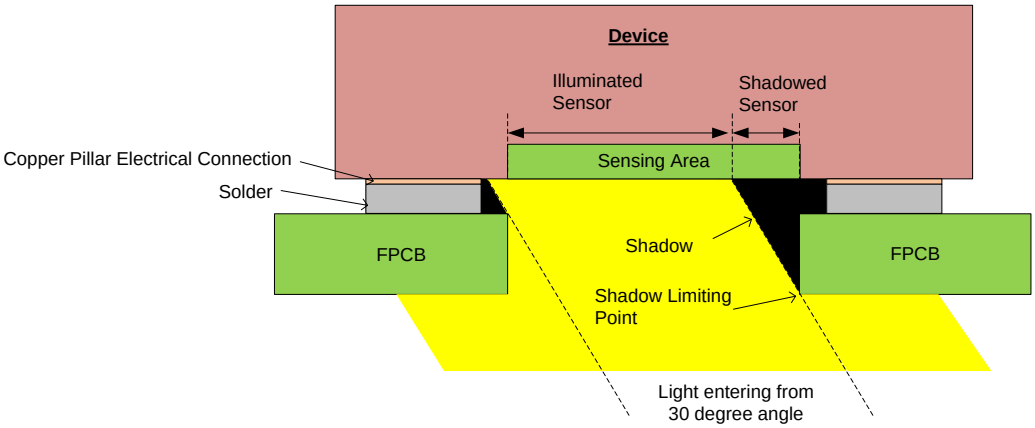

Figure 30. Cross-Sectional Diagram of OPT3007 Soldered to an FPCB With a Cutout, Including Light Entering From an Angle

Typical Application (continued)

To design the angular response to have greater than 50% response at 30°, the optical mechanisms must be understood. This analysis is simplified by assuming a perfectly rectangular cutout. The concepts for this rectangular cutout apply to nonrectangular cutouts, but require a more complex 3D analysis. The analysis performed here is approximate because the actual cutout is not perfectly rectangular.

The net system response is the response of the device without the shadowing effect, multiplied by the percentage of the device that is illuminated, per Equation 4:

$$\text{Net System Response (\%)} = \text{Device Response (\%)} \times \text{Device Illumination (\%)} \tag{4}$$

The shadow impacts the percentage of the sensor that can be illuminated, as seen in Figure 30. The percent response of a shadowed sensor is the percent of the sensor that is illuminated.

The percent of the sensor that must be illuminated to achieve > 50% response is derived by the sequence of Equation 5 through Equation 7.

$$\text{Net System Response} > 50\% \tag{5}$$

$$\text{Device Response} \times \text{Device Illumination} > 50\% \tag{6}$$

$$\text{Device Illumination} > 50\% / \text{Device Response} \tag{7}$$

The device has a 75% response at 30°, as shown in Figure 13, and is a little less than the expected cosine of 30°. The resulting device illumination is shown inEquation 8.

$$\text{Device Illumination} > 66\% \tag{8}$$

Hence, the 3-dimensional geometry illustrated in Figure 30 must permit greater than 66% of the sensor to be illuminated at a 30° angle of incident light. To quantify the geometry of this design, the post-SMT solder thickness is approximately 37 µm (half the thickness of the pre-SMT solder paste thickness), the copper pillar electrical connection is 7 µm, and the FPCB is 105 µm. Therefore, the shadow limiting point is 37 µm + 7 µm + 105 µm = 149 µm, higher than the sensing surface. The 30° angle shadow extends beyond that shadow limiting point per Equation 9.

$$\text{Shadow} = \text{Tan (Illumination_Angle)} \times \text{Shadow_limiting_height} = \text{Tan (30degrees)} \times 149\ \mu\text{m} = 86\ \mu\text{m} \tag{9}$$

For this instance of the design and tolerance, the shadow limiting point of FPCB cutout is roughly even with the sensor edge, so 86 µm of the sensor is under shadow. If the shadow limiting point was not even with the sensor edge because of either the design or the tolerances, an extra term is added per the system geometry. Given that the sensor width is 381 µm (per the attached mechanical drawing at the end of this data sheet), the amount of illuminated sensor is 381 µm – 86 µm = 295 µm = 77.4%.

The net response at the 30° angle is predicted byEquation 10

$$\text{Net System Response} = \text{Device Response} \times \text{Device Illumination} = 75\% \times 77.4\% = 58\% \tag{10}$$

There might be an additional need to put a product casing over the assembly of OPT3007 and the FPCB. The window sizing and placement for such an assembly is discussed in more rigorous detail in application report *OPT3001: Ambient Light Sensor Application Guide* (SBEA002).

Copyright © 2017, Texas Instruments Incorporated

Typical Application (continued)

8.2.3 Application Curves

To validate the angular response of the design, put a light source in a fixed position, allow the device assembly to rotate, and take device measurements at a series of angles. The resulting angular response of this design along the less-restricted rotational axis is shown in Figure 31. The resulting angular response of the more-restricted rotational axis is shown in Figure 32. The response of the device at a 30° angle is approximately 60%, and is very close to the 58% predicted by Equation 10 in the preceding analysis.

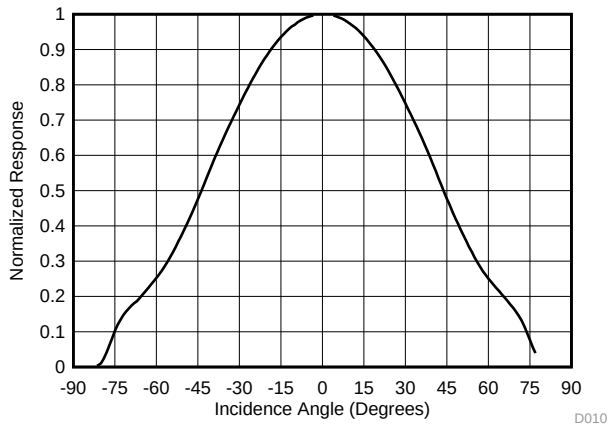

Figure 31. Angular Response of this FPCB Design Along the Less-Restricted Rotational Axis

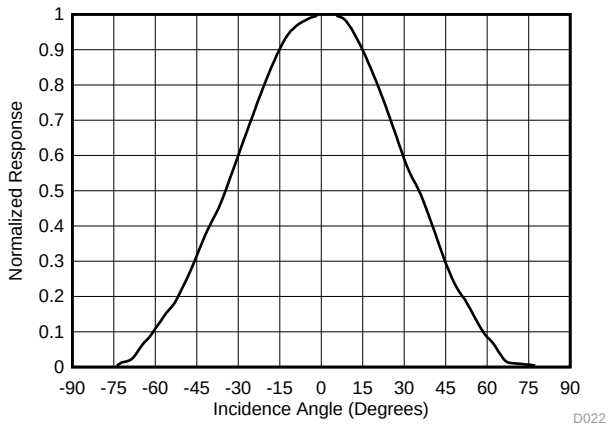

Figure 32. Angular Response of this FPCB Design Along the More-Restricted Rotational Axis

8.3 Do's and Don'ts

As with any optical product, take special care when handling the OPT3007. The OPT3007 is a piece of active silicon, without the mechanical protection of an epoxy-like package or other reenforcement. This design allows the device to be as thin as possible. Take extra care to handle the device gently in order to not crack or break the device. Use a properly-sized vacuum manipulation tool to handle the device.

The optical surface of the device must be kept clean for optimal performance, both when prototyping with the device, and during mass production manufacturing procedures. Keep the optical surface clean of fingerprints, dust, and other optical-inhibiting contaminants.

If the optical surface of the device requires cleaning, use a few gentle brushes with a soft swab of deionized water or isopropyl alcohol. Avoid potentially abrasive cleaning and manipulating tools and excessive force that can scratch the optical surface.

If the OPT3007 performs less than optimally, inspect the optical surface for dirt, scratches, or other optical artifacts.

9 Power-Supply Recommendations

Although the OPT3007 has low sensitivity to power-supply issues, good practices are always recommended. For best performance, the OPT3007 VDD pin must have a stable, low-noise power supply with a 100-nF bypass capacitor close to the device and solid grounding. There are many options for powering the OPT3007 because the device current consumption levels are very low.

Copyright © 2017, Texas Instruments Incorporated

10 Layout

10.1 Layout Guidelines

The PCB layout design for the OPT3007 requires a couple of considerations. The design of the cutout to allow light to illuminate the sensor is a critical part of this design. See the *Optomechanical Design* section for a more detailed discussion of creating this cutout.

The device layout is also critical for optimal SMT assembly. Two types of land pattern pads can be used for this package: solder mask defined pads (SMD) and non-solder mask defined pads (NSMD). SMD pads have a solder mask opening that is smaller than the metal pads, whereas NSMD has a solder mask opening that is larger than the metal pad.Figure 33 illustrates these types of landing-pattern pads. SMD is preferred because it provides a more accurate soldering-pad dimension with the trace connections. For further discussion of SMT and PCB recommendations, see the *Soldering and Handling Recommendations* section.

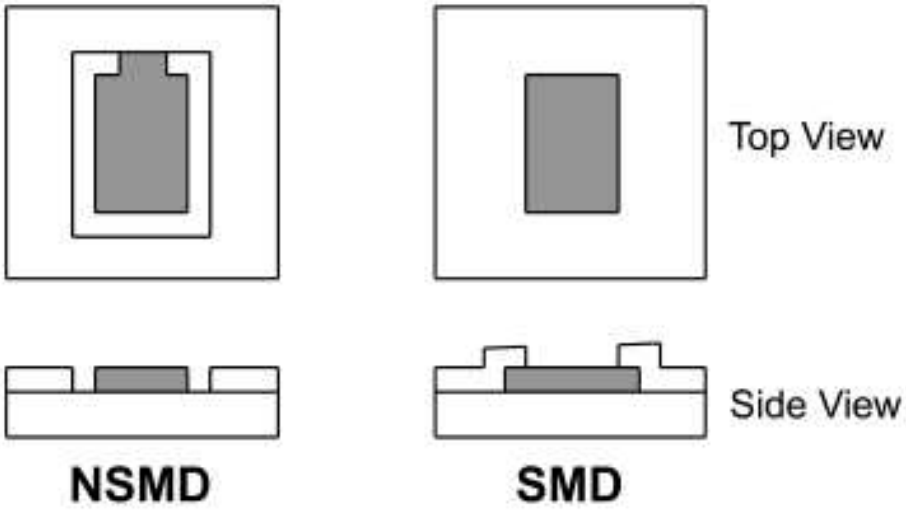

Figure 33. Soldermask Defined Pad (SMD) and Non-Soldermask Defined Pad (NSMD)

Stabilize the power supply with a capacitor placed close to the OPT3007 VDD and GND pins. Note that optically reflective surfaces of components also affect the performance of the design. The three-dimensional geometry of all components and structures around the sensor must be taken into consideration to prevent unexpected results from secondary optical reflections. Placing capacitors and components at a distance of at least twice the height of the component is usually sufficient, although further placement can still achieve good results. The most optimal optical layout is to place all close components on the opposite side of the PCB from the OPT3007. However, this approach may not be practical for the constraints of every design.

An example PCB layout with the OPT3007 is shown in Figure 35.

10.2 Soldering and Handling Recommendations

The OPT3007 is a very small device with special soldering and handling considerations. See Optomechanical Design for implications of alignment between the device and the cutout area. See Layout Guidelines for considerations of the soldering pads.

As with most optical devices, handle the OPT3007 with special care to make sure optical surfaces stay clean and free from damage. See the *Do's and Don'ts* section for more detailed recommendations. For best optical performance, clean solder flux and any other possible debris after soldering processes.

Copyright © 2017, Texas Instruments Incorporated

Soldering and Handling Recommendations (continued)

10.2.1 Solder Paste

For solder-paste deposition, use a stencil-printing process that involves the transfer of solder paste through predefined apertures with the application of pressure. Stencil parameters, such as aperture area ratio and fabrication process, have a significant impact on paste deposition. Cut the stencil apertures using a laser with an electropolish-fabrication method. Taper the stencil aperture walls by 5° to facilitate paste release. Shifting the solder-paste towards the outside of the device minimizes the possibility of solder getting into the device sensing area. See the mechanical packages attached to the end of this data sheet.

Use solder paste selection type 4 or higher, no-clean, lead-free solder paste. If solder splatters in the reflow process, choose a solder paste with normal- or low-flux contents, or alter the reflow profile per the *Reflow Profile* section.

10.2.2 Package Placement

Use a pick-and-place nozzle with a size number larger than 0.6 mm. If the placement method is done by programming the component thickness, add 0.04 mm to the actual component thickness so that the package sits halfway into the solder paste. If placement is by force, then choose minimum force no larger than 3N in order to avoid forcing out solder paste, or free falling the package, and to avoid soldering problems such as bridging and solder balling.

10.2.3 Reflow Profile

Use the profile in Figure 34, and adjust if necessary. Use a slow solder reflow ramp rate of 1°C to 1.2°C/s to minimize chances of solder splattering onto the sensing area.

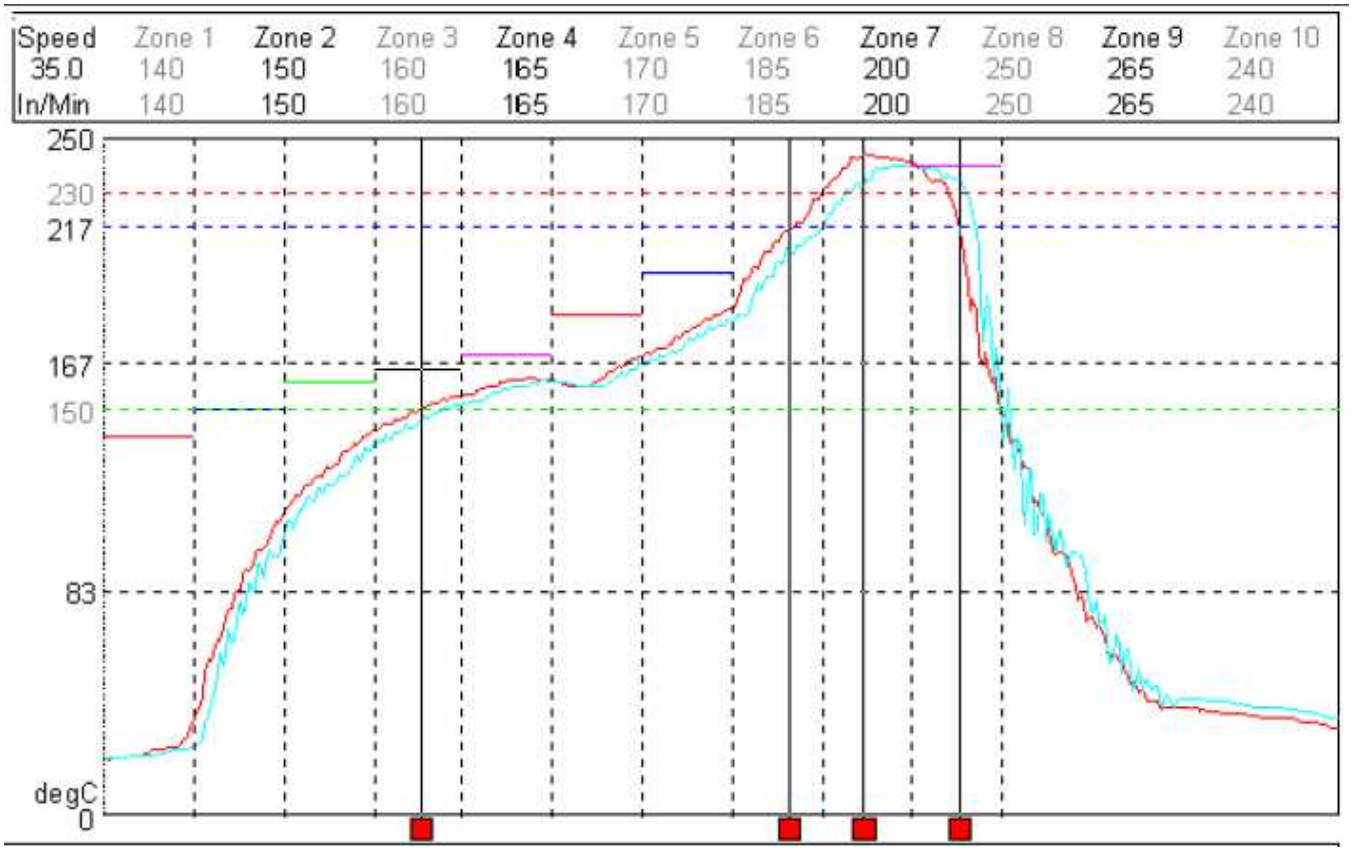

Figure 34. Recommended Solder Reflow Temperature Profile

Soldering and Handling Recommendations (continued)

10.2.4 Special Flexible Printed-Circuit Board (FPCB) Recommendations

Special flexible printed-circuit board (FPCB) design recommendations include:

- Fabricate per IPC-6013.
- Use material of flexible copper clad per IPC 4204/11 (Define polyimide and copper thickness per product application).
- Finish: All exposed copper will be electroless Ni immersion gold (ENIG) per IPC 4556.
- Solder mask per IPC SM840.
- Use a laser to create the cutout for light sensing for better accuracy, and to avoid affecting the soldering pad dimension. Other options, such as punched cutouts, are possible. See the *Optomechanical Design* section for further discussion ranging from the implications of the device to cutout region size and alignment. The full design must be considered, including the tolerances.

To assist the handling of the very thin flexible circuit, design and fabricate a fixture to hold the flexible circuit through the paste-printing, pick-and-place, and reflow processes. Contact the factory for examples of such fixtures.

10.2.5 Rework Process

If the OPT3007 must be removed from a PCB, discard the device and do not reattach. To remove the package from the PCB/Flexi cable, heat the solder joints above liquidus temperature. Bake the board at 125°C for 4 hours prior to rework to remove moisture that may crack the PCB or causing delamination. Use a thermal heating profile to remove a package that is close to the profile that mounts the package. Clean the site to remove any excess solder and residue to prepare for installing a new package. Use a mini stencil (localized stencil) to apply solder paste to the land pattern. In case a mini stencil cannot be used because of spacing or other reasons, apply solder paste on the package pads directly, then mount, and reflow.

10.3 Layout Example

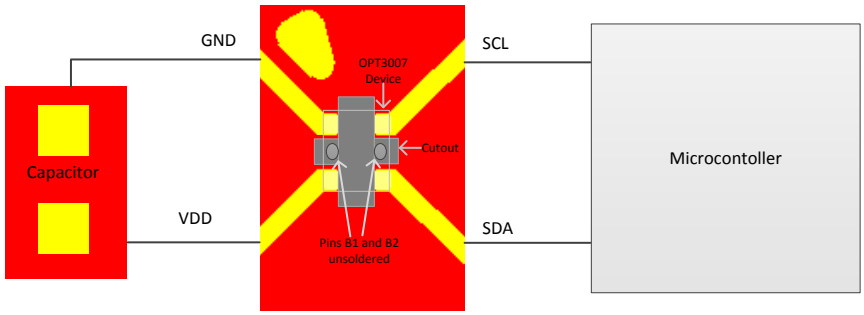

The center pads are no connect

Figure 35. Example FPCB Layout With the OPT3007

版权 © 2017, Texas Instruments Incorporated

11 器件和文档支持

11.1 文档支持

11.1.1 相关文档

请参阅如下相关文档：

- *《OPT3001：环境光传感器应用指南》*（文献编号：SBEA002）
- *《OPT3007EVM 用户指南》*(SBOU181)
- 应用报告《QFN/SON PCB 连接》（文献编号：SLUA271）

11.2 接收文档更新通知

要接收文档更新通知，请导航至 TI.com 上的器件产品文件夹。单击右上角的*通知我* 进行注册，即可每周接收产品信息更改摘要。有关更改的详细信息，请查看任何已修订文档中包含的修订历史记录。

11.3 社区资源

下列链接提供到 TI 社区资源的连接。链接的内容由各个分销商"按照原样"提供。这些内容并不构成 TI 技术规范，并且不一定反映 TI 的观点；请参阅 TI 的 《使用条款》。

TI E2E™ 在线社区 ***TI 的工程师对工程师 (E2E) 社区。***此社区的创建目的在于促进工程师之间的协作。在 e2e.ti.com 中，您可以咨询问题、分享知识、拓展思路并与同行工程师一道帮助解决问题。

设计支持 ***TI 参考设计支持*** 可帮助您快速查找有帮助的 E2E 论坛、设计支持工具以及技术支持的联系信息。

11.4 商标

PicoStar, E2E are trademarks of Texas Instruments.
All other trademarks are the property of their respective owners.

11.5 静电放电警告

ESD 可能会损坏该集成电路。德州仪器 (TI) 建议通过适当的预防措施处理所有集成电路。如果不遵守正确的处理措施和安装程序，可能会损坏集成电路。

ESD 的损坏小至导致微小的性能降级，大至整个器件故障。 精密的集成电路可能更容易受到损坏，这是因为非常细微的参数更改都可能会导致器件与其发布的规格不相符。

11.6 Glossary

SLYZ022 — *TI Glossary*.

This glossary lists and explains terms, acronyms, and definitions.

12 机械、封装和可订购信息

以下页中包括机械封装、封装和可订购信息。这些信息是针对指定器件可提供的最新数据。这些数据如有变更，恕不另行通知和修订此文档。如欲获取此产品说明书的浏览器版本，请参阅左侧的导航。

PACKAGING INFORMATION

Orderable Device	Status (1)	Package Type	Package Drawing	Pins	Package Qty	Eco Plan (2)	Lead finish/ Ball material (6)	MSL Peak Temp (3)	Op Temp (°C)	Device Marking (4/5)	Samples
OPT3007YMFR	ACTIVE	PICOSTAR	YMF	6	3000	RoHS & Green	Call TI	Level-1-260C-UNLIM	-40 to 85	7F	Samples
OPT3007YMFT	ACTIVE	PICOSTAR	YMF	6	250	RoHS & Green	CUNIPD	Level-1-260C-UNLIM	-40 to 85	7F	Samples

(1) The marketing status values are defined as follows:
ACTIVE: Product device recommended for new designs.
LIFEBUY: TI has announced that the device will be discontinued, and a lifetime-buy period is in effect.
NRND: Not recommended for new designs. Device is in production to support existing customers, but TI does not recommend using this part in a new design.
PREVIEW: Device has been announced but is not in production. Samples may or may not be available.
OBSOLETE: TI has discontinued the production of the device.

(2) **RoHS:** TI defines "RoHS" to mean semiconductor products that are compliant with the current EU RoHS requirements for all 10 RoHS substances, including the requirement that RoHS substance do not exceed 0.1% by weight in homogeneous materials. Where designed to be soldered at high temperatures, "RoHS" products are suitable for use in specified lead-free processes. TI may reference these types of products as "Pb-Free".
RoHS Exempt: TI defines "RoHS Exempt" to mean products that contain lead but are compliant with EU RoHS pursuant to a specific EU RoHS exemption.
Green: TI defines "Green" to mean the content of Chlorine (Cl) and Bromine (Br) based flame retardants meet JS709B low halogen requirements of <=1000ppm threshold. Antimony trioxide based flame retardants must also meet the <=1000ppm threshold requirement.

(3) MSL, Peak Temp. - The Moisture Sensitivity Level rating according to the JEDEC industry standard classifications, and peak solder temperature.

(4) There may be additional marking, which relates to the logo, the lot trace code information, or the environmental category on the device.

(5) Multiple Device Markings will be inside parentheses. Only one Device Marking contained in parentheses and separated by a "~" will appear on a device. If a line is indented then it is a continuation of the previous line and the two combined represent the entire Device Marking for that device.

(6) Lead finish/Ball material - Orderable Devices may have multiple material finish options. Finish options are separated by a vertical ruled line. Lead finish/Ball material values may wrap to two lines if the finish value exceeds the maximum column width.

Important Information and Disclaimer: The information provided on this page represents TI's knowledge and belief as of the date that it is provided. TI bases its knowledge and belief on information provided by third parties, and makes no representation or warranty as to the accuracy of such information. Efforts are underway to better integrate information from third parties. TI has taken and continues to take reasonable steps to provide representative and accurate information but may not have conducted destructive testing or chemical analysis on incoming materials and chemicals. TI and TI suppliers consider certain information to be proprietary, and thus CAS numbers and other limited information may not be available for release.

In no event shall TI's liability arising out of such information exceed the total purchase price of the TI part(s) at issue in this document sold by TI to Customer on an annual basis.

TAPE AND REEL INFORMATION

REEL DIMENSIONS

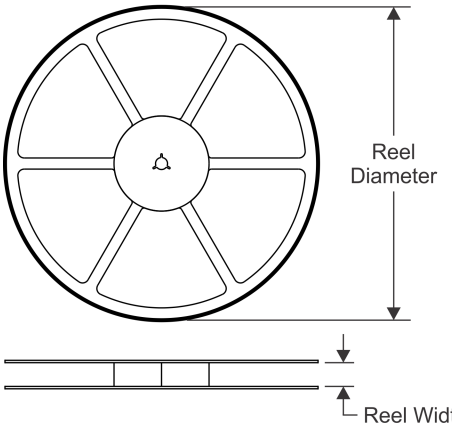

TAPE DIMENSIONS

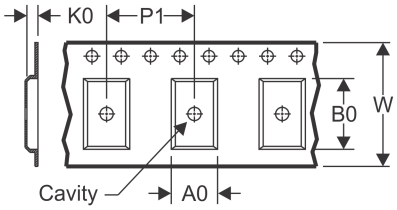

A0	Dimension designed to accommodate the component width
B0	Dimension designed to accommodate the component length
K0	Dimension designed to accommodate the component thickness
W	Overall width of the carrier tape
P1	Pitch between successive cavity centers

QUADRANT ASSIGNMENTS FOR PIN 1 ORIENTATION IN TAPE

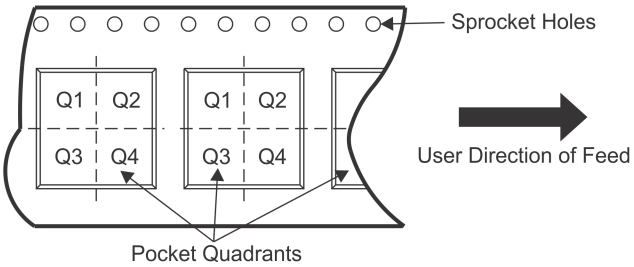

*All dimensions are nominal

Device	Package Type	Package Drawing	Pins	SPQ	Reel Diameter (mm)	Reel Width W1 (mm)	A0 (mm)	B0 (mm)	K0 (mm)	P1 (mm)	W (mm)	Pin1 Quadrant
OPT3007YMFR	PICOSTAR	YMF	6	3000	180.0	8.4	0.96	1.05	0.33	2.0	8.0	Q1
OPT3007YMFT	PICOSTAR	YMF	6	250	180.0	8.4	0.96	1.05	0.33	2.0	8.0	Q1

TAPE AND REEL BOX DIMENSIONS

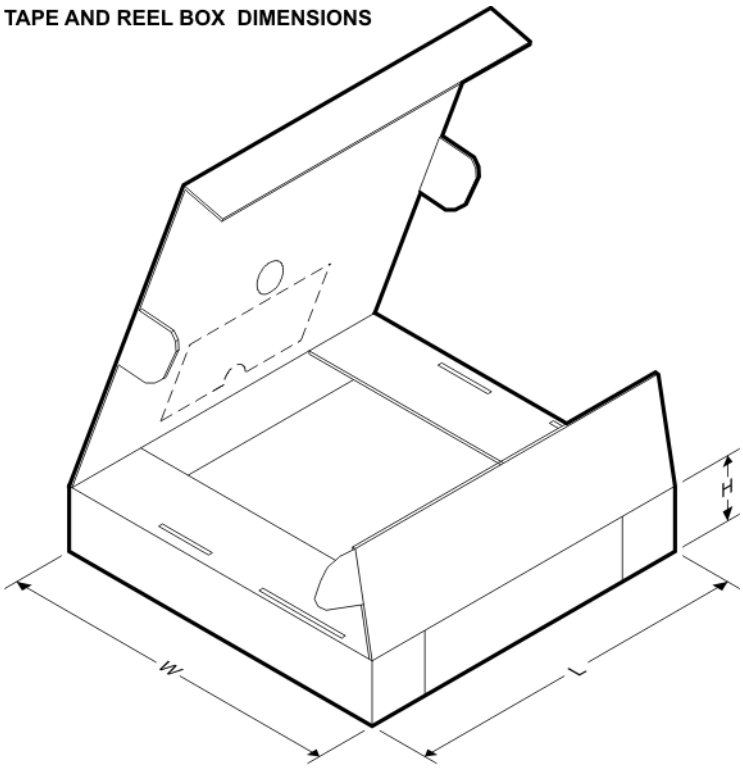

*All dimensions are nominal

Device	Package Type	Package Drawing	Pins	SPQ	Length (mm)	Width (mm)	Height (mm)
OPT3007YMFR	PICOSTAR	YMF	6	3000	182.0	182.0	20.0
OPT3007YMFT	PICOSTAR	YMF	6	250	182.0	182.0	20.0

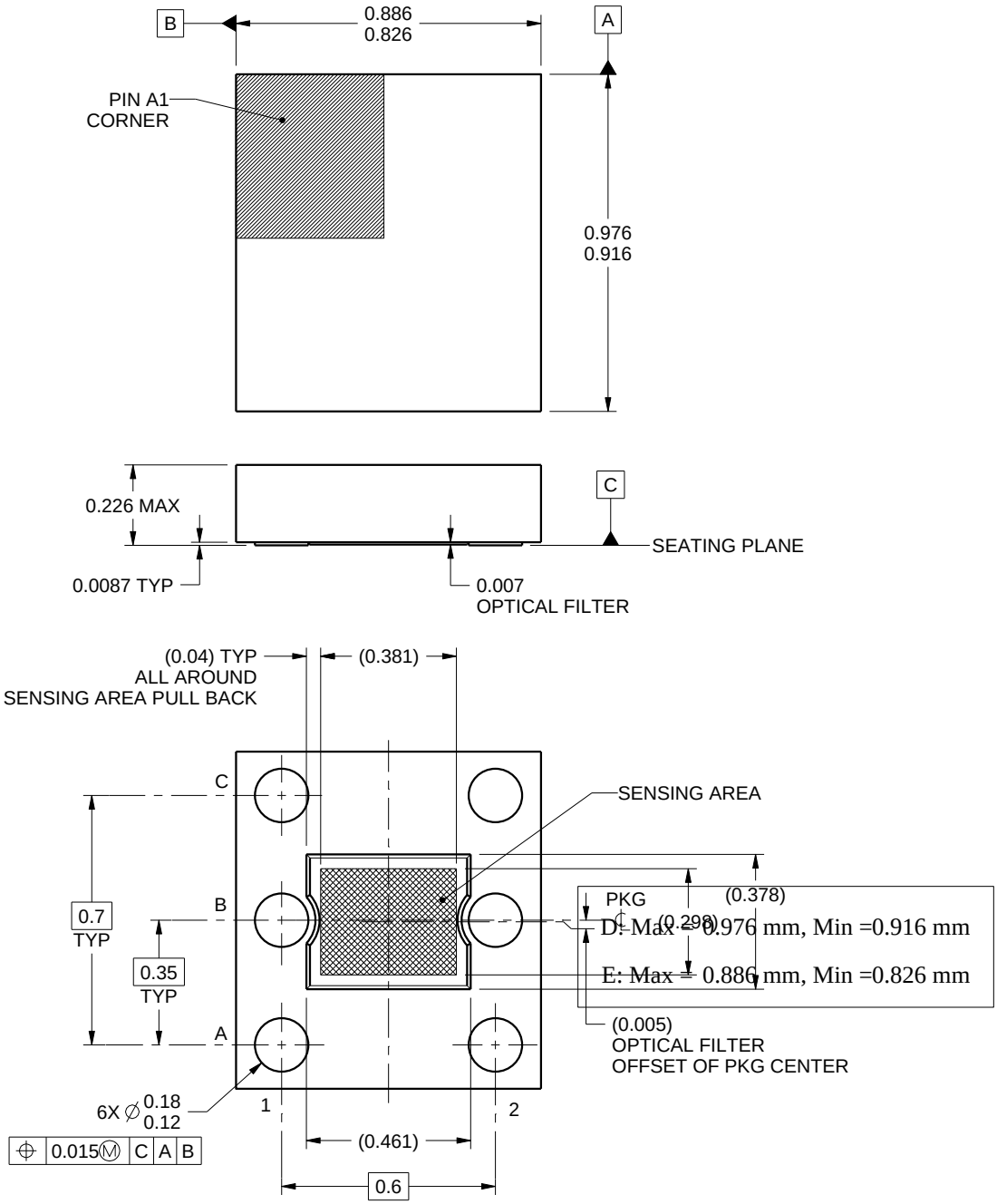

4222902/A 05/2016

NOTES:

PicoStar is a trademark of Texas Instruments.

1. All linear dimensions are in millimeters. Any dimensions in parenthesis are for reference only. Dimensioning and tolerancing per ASME Y14.5M.
2. This drawing is subject to change without notice.

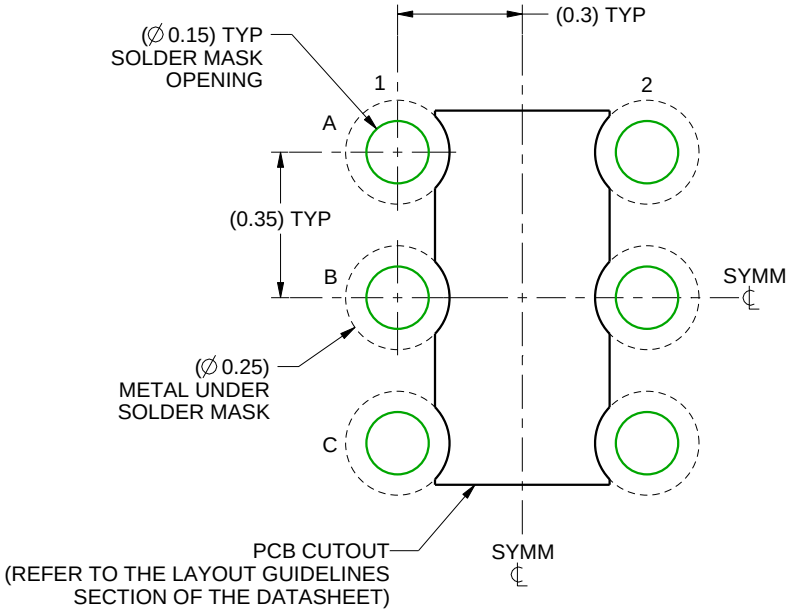

LAND PATTERN EXAMPLE
SCALE: 55X

4222902/A 05/2016

NOTES: (continued)

3. Final dimensions may vary due to manufacturing tolerance considerations and also routing constraints.
For more information, see Texas Instruments literature number SLUA271 (www.ti.com/lit/slua271).

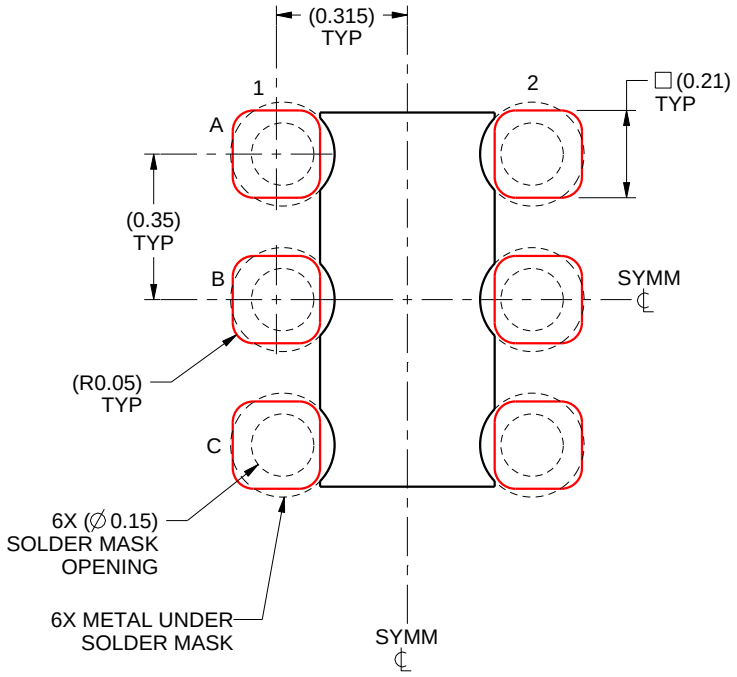

SOLDER PASTE EXAMPLE
BASED on 0.075 mm THICK STENCIL
SCALE: 55X

4222902/A 05/2016

NOTES: (continued)

4. Laser cutting apertures with trapezoidal walls and rounded corners may offer better paste release.

重要声明和免责声明

TI“按原样”提供技术和可靠性数据（包括数据表）、设计资源（包括参考设计）、应用或其他设计建议、网络工具、安全信息和其他资源，不保证没有瑕疵且不做出任何明示或暗示的担保，包括但不限于对适销性、某特定用途方面的适用性或不侵犯任何第三方知识产权的暗示担保。

这些资源可供使用 TI 产品进行设计的熟练开发人员使用。您将自行承担以下全部责任：(1) 针对您的应用选择合适的 TI 产品，(2) 设计、验证并测试您的应用，(3) 确保您的应用满足相应标准以及任何其他功能安全、信息安全、监管或其他要求。

这些资源如有变更，恕不另行通知。TI 授权您仅可将这些资源用于研发本资源所述的 TI 产品的应用。严禁对这些资源进行其他复制或展示。您无权使用任何其他 TI 知识产权或任何第三方知识产权。您应全额赔偿因在这些资源的使用中对 TI 及其代表造成的任何索赔、损害、成本、损失和债务，TI 对此概不负责。

TI 提供的产品受 TI 的销售条款或 ti.com 上其他适用条款/TI 产品随附的其他适用条款的约束。TI 提供这些资源并不会扩展或以其他方式更改 TI 针对 TI 产品发布的适用的担保或担保免责声明。

TI 反对并拒绝您可能提出的任何其他或不同的条款。

邮寄地址：Texas Instruments, Post Office Box 655303, Dallas, Texas 75265
Copyright © 2022，德州仪器 (TI) 公司