SNx4LS245 Octal Bus Transceivers With 3-State Outputs

1 Features

- 3-State Outputs Drive Bus Lines Directly
- PNP Inputs Reduce DC Loading on Bus Lines
- Hysteresis at Bus Inputs Improves Noise Margins
- Typical Propagation Delay Times Port to Port, 8 ns

2 Applications

- Building Automation
- Electronic Point of Sale
- Factory Automation and Control
- Test and Measurement

3 Description

These octal bus transceivers are designed for asynchronous two-way communication between data buses. The control-function implementation minimizes external timing requirements.

The SNx4LS245 devices allow data transmission from the A bus to the B bus or from the B bus to the A bus, depending on the logic level at the direction-control (DIR) input. The output-enable ($\overline{OE}$) input can disable the device so that the buses are effectively isolated.

Device Information(1)

PART NUMBER	PACKAGE	BODY SIZE (NOM)
SN54LS245J	CDIP (20)	24.20 mm × 6.92 mm
SN54LS245W	CFP (20)	7.02 mm × 13.72 mm
SN54LS245FK	LCCC (20)	8.89 mm × 8.89 mm
SN74LS245DB	SSOP (20)	7.20 mm × 5.30 mm
SN74LS245DW	SOIC (20)	12.80 mm × 7.50 mm
SN74LS245N	PDIP (20)	24.33 mm × 6.35 mm
SN74LS245NS	SO (20)	12.60 mm × 5.30 mm

(1) For all available packages, see the orderable addendum at the end of the data sheet.

Logic Diagram (Positive Logic)

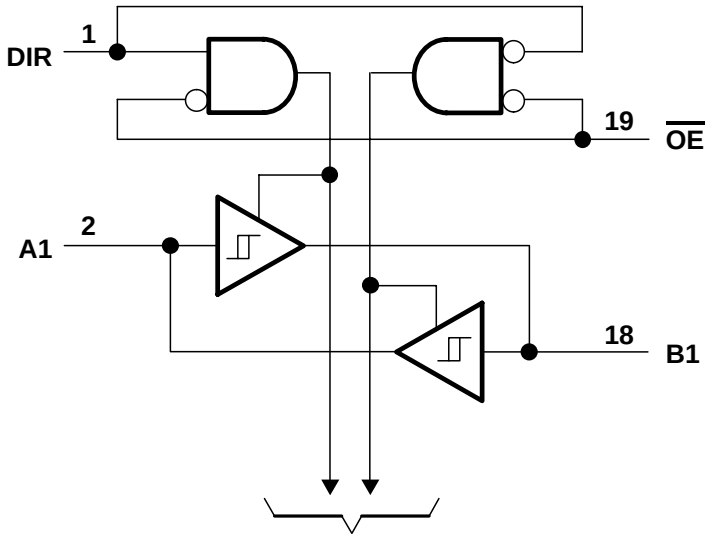

Copyright © 2016, Texas Instruments Incorporated

An IMPORTANT NOTICE at the end of this data sheet addresses availability, warranty, changes, use in safety-critical applications, intellectual property matters and other important disclaimers. PRODUCTION DATA.

On products compliant to MIL-PRF-38535, all parameters are tested unless otherwise noted. On all other products, production processing does not necessarily include testing of all parameters.

Table of Contents

1 Features ... 1
2 Applications ... 1
3 Description ... 1
4 Revision History ... 2
5 Device Comparison Table ... 3
6 Pin Configuration and Functions ... 3
7 Specifications ... 4
7.1 Absolute Maximum Ratings ... 4
7.2 ESD Ratings ... 4
7.3 Recommended Operating Conditions ... 4
7.4 Thermal Information ... 4
7.5 Electrical Characteristics ... 5
7.6 Switching Characteristics ... 5
7.7 Typical Characteristics ... 6
8 Parameter Measurement Information ... 7
9 Detailed Description ... 8
9.1 Overview ... 8
9.2 Functional Block Diagram ... 8
9.3 Feature Description ... 8
9.4 Device Functional Modes ... 8
10 Application and Implementation ... 10
10.1 Application Information ... 10
10.2 Typical Application ... 10
11 Power Supply Recommendations ... 12
12 Layout ... 12
12.1 Layout Guidelines ... 12
12.2 Layout Example ... 12
13 Device and Documentation Support ... 13
13.1 Related Links ... 13
13.2 Receiving Notification of Documentation Updates 13
13.3 Community Resource ... 13
13.4 Trademarks ... 13
13.5 Electrostatic Discharge Caution ... 13
13.6 Glossary ... 13
14 Mechanical, Packaging, and Orderable Information ... 13

4 Revision History

NOTE: Page numbers for previous revisions may differ from page numbers in the current version.

Changes from Revision A (February 2002) to Revision B	Page
• Added *ESD Ratings* table, *Feature Description* section, *Device Functional Modes*, *Application and Implementation* section, *Power Supply Recommendations* section, *Layout* section, *Device and Documentation Support* section, and *Mechanical, Packaging, and Orderable Information* section	1
• Deleted *Ordering Information* table; see POA at the end of the data sheet	1
• Changed $R_{\theta JA}$ values in *Thermal Information* table: 70 to 91.7 for DB package, 58 to 79 for DW package, 69 to 46.1 for N package, and 60 to 74.2 for NS package	4

Copyright © 1976–2016, Texas Instruments Incorporated

5 Device Comparison Table

TYPE	I_{OL} (SINK CURRENT)	I_{OH} (SOURCE CURRENT)
SN54LS245	12 mA	–12 mA
SN74LS245	24 mA	–15 mA

6 Pin Configuration and Functions

J, W, DB, DW, N, or NS Package
20-Pin CDIP, CFP, SSOP, SOIC, PDIP, or SO
Top View

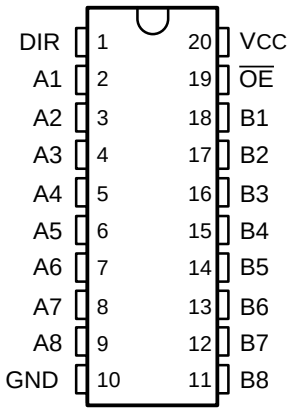

FK Package
20-Pin LCCC
Top View

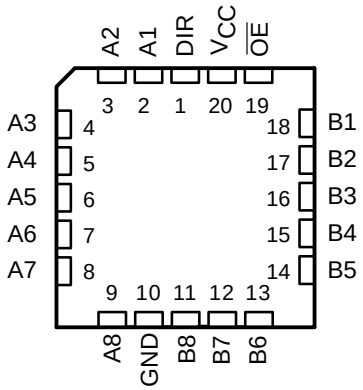

Pin Functions

PIN		I/O	DESCRIPTION
NO.	NAME		
1	DIR	I	Controls signal direction; Low = Bx to Ax, High = Ax to Bx
2	A1	I/O	Channel 1, A side
3	A2	I/O	Channel 2, A side
4	A3	I/O	Channel 3, A side
5	A4	I/O	Channel 4, A side
6	A5	I/O	Channel 5, A side
7	A6	I/O	Channel 6, A side
8	A7	I/O	Channel 7, A side
9	A8	I/O	Channel 8, A side
10	GND	—	Ground
11	B8	O/I	Channel 8, B side
12	B7	O/I	Channel 7, B side
13	B6	O/I	Channel 6, B side
14	B5	O/I	Channel 5, B side
15	B4	O/I	Channel 4, B side
16	B3	O/I	Channel 3, B side
17	B2	O/I	Channel 2, B side
18	B1	O/I	Channel 1, B side
19	$\overline{OE}$	I	Active low output enable; Low = all channels active, High = all channels disabled (high impedance)
20	V_{CC}	—	Power supply

Copyright © 1976–2016, Texas Instruments Incorporated

7 Specifications

7.1 Absolute Maximum Ratings

over operating free-air temperature range (unless otherwise noted)

		MIN	MAX	UNIT
V_{CC}	Supply voltage		7	V
V_I	Input voltage (1)		7	V
T_J	Operating virtual junction temperature		150	°C
T_{stg}	Storage temperature	–65	150	°C

(1) All voltage values are with respect to GND.

7.2 ESD Ratings

			VALUE	UNIT
$V_{(ESD)}$	Electrostatic discharge	Human-body model (HBM), per ANSI/ESDA/JEDEC JS-001 (1)	±2500	V
		Charged-device model (CDM), per JEDEC specification JESD22-C101 (2)	±1500	

(1) JEDEC document JEP155 states that 500-V HBM allows safe manufacturing with a standard ESD control process.
(2) JEDEC document JEP157 states that 250-V CDM allows safe manufacturing with a standard ESD control process.

7.3 Recommended Operating Conditions

			MIN	NOM	MAX	UNIT
V_{CC}	Supply voltage	SN54LS245	4.5	5	5.5	V
		SN74LS245	4.75	5	5.25	
I_{OH}	High-level output current	SN54LS245			–12	mA
		SN74LS245			–15	
I_{OL}	Low-level output current	SN54LS245			12	mA
		SN74LS245			24	
T_A	Operating free-air temperature	SN54LS245	–55		125	°C
		SN74LS245	0		70	

7.4 Thermal Information

THERMAL METRIC (1)		SNx4LS245							UNIT
		J (CDIP)	W (CFP)	FK (LCCC)	DB (SSOP)	DW (SOIC)	N (PDIP)	NS (SO)	
		20 PINS	20 PINS	20 PINS	20 PINS	20 PINS	20 PINS	20 PINS	
$R_{\theta JA}$	Junction-to-ambient thermal resistance	N/A	N/A	N/A	91.7	79.0	46.1	74.2	°C/W
$R_{\theta JC(top)}$	Junction-to-case (top) thermal resistance	42.3 (2)	70.1 (2)	46.7 (2)	53.1	44.4	32.1	40.4	°C/W
$R_{\theta JB}$	Junction-to-board thermal resistance	56.9 (2)	109.5 (2)	45.6 (2)	46.8	46.9	27.0	41.7	°C/W
ψ_{JT}	Junction-to-top characterization parameter	N/A	N/A	N/A	18.9	18.0	17.6	16.9	°C/W
ψ_{JB}	Junction-to-board characterization parameter	N/A	N/A	N/A	46.4	46.3	26.9	41.3	°C/W
$R_{\theta JC(bot)}$	Junction-to-case (bottom) thermal resistance	15.9 (2)	13.0 (2)	6.7 (2)	N/A	N/A	N/A	N/A	°C/W

(1) For more information about traditional and new thermal metrics, see the *Semiconductor and IC Package Thermal Metrics* application report.
(2) MIL-STD-883 for Rth-JCx JEDEC JESD51 for Rth-JB (body not contact PCB)

Copyright © 1976–2016, Texas Instruments Incorporated

7.5 Electrical Characteristics

over recommended operating free-air temperature range (unless otherwise noted)

PARAMETER			TEST CONDITIONS[1]			MIN	TYP[1]	MAX	UNIT
V_{IH}	High-level input voltage					2			V
V_{IL}	Low-level input voltage			SN54LS245				0.7	V
				SN74LS245				0.8	
V_{IK}	Input clamp voltage		V_{CC} = MIN,	I_I = –18 mA				–1.5	V
	Hysteresis ($V_{T+} – V_{T–}$)	A or B	V_{CC} = MIN			0.2	0.4		V
V_{OH}	High-level output voltage		V_{CC} = MIN, $V_{IL} = V_{IL(max)}$ V_{IH} = 2 V,	I_{OH} = –3 mA		2.4	3.4		V
				I_{OH} = MAX		2			
V_{OL}	Low-level output voltage		V_{CC} = MIN, V_{IH} = 2 V, $V_{IL} = V_{IL(max)}$	I_{OL} = 12 mA				0.4	V
				I_{OL} = 24 mA	SN74LS245			0.5	
I_{OZH}	Off-state output current, high-level voltage applied		V_{CC} = MAX, $\overline{OE}$ at 2 V	V_O = 2.7 V				20	µA
I_{OZL}	Off-state output current, low-level voltage applied		V_{CC} = MAX, $\overline{OE}$ at 2 V	V_O = 0.4 V				–200	µA
I_I	Input current at maximum input voltage	A or B	V_{CC} = MAX	V_I = 5.5 V				0.1	mA
		DIR or $\overline{OE}$		V_I = 7 V				0.1	
I_{IH}	High-level input current		V_{CC} = MAX,	V_{IH} = 2.7 V				20	µA
I_{IL}	Low-level input current		V_{CC} = MAX,	V_{IL} = 0.4 V				–0.2	mA
I_{OS}	Short-circuit output current[2]		V_{CC} = MAX			–40		–225	mA
I_{CC}	Supply current	Total, outputs high	V_{CC} = MAX	Outputs open			48	70	mA
		Total, outputs low					62	90	
		Outputs at high Z					64	95	

(1) All typical values are at V_{CC} = 5 V, T_A = 25°C.
(2) Not more than one output should be shorted at a time, and duration of the short circuit should not exceed one second.

7.6 Switching Characteristics

V_{CC} = 5 V, T_A = 25°C (see Figure 2)

PARAMETER		TEST CONDITIONS	MIN	TYP	MAX	UNIT
t_{PLH}	Propagation delay time, low- to high-level output	C_L = 45 pF, R_L = 667 Ω		8	12	ns
t_{PHL}	Propagation delay time, high- to low-level output			8	12	
t_{PZL}	Output enable time to low level	C_L = 45 pF, R_L = 667 Ω		27	40	ns
t_{PZH}	Output enable time to high level			25	40	
t_{PLZ}	Output disable time from low level	C_L = 5 pF, R_L = 667 Ω		15	25	ns
t_{PHZ}	Output disable time from high level			15	28	

Copyright © 1976–2016, Texas Instruments Incorporated

7.7 Typical Characteristics

V_{CC} = 5 V, T_A = 25°C, C_L = 45 pF, R_L = 667 Ω

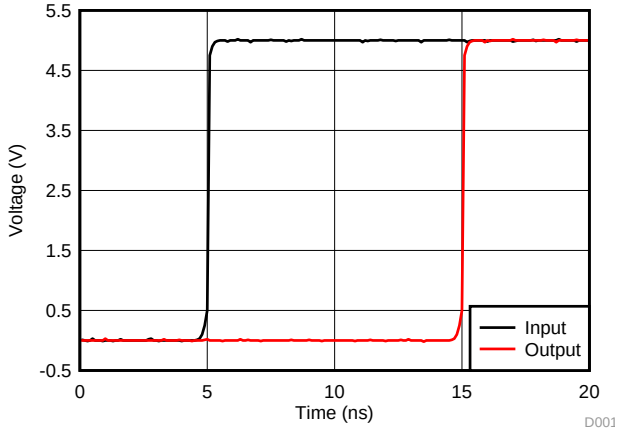

Figure 1. Simulated Propagation Delay From Input to Output

Copyright © 1976–2016, Texas Instruments Incorporated

8 Parameter Measurement Information

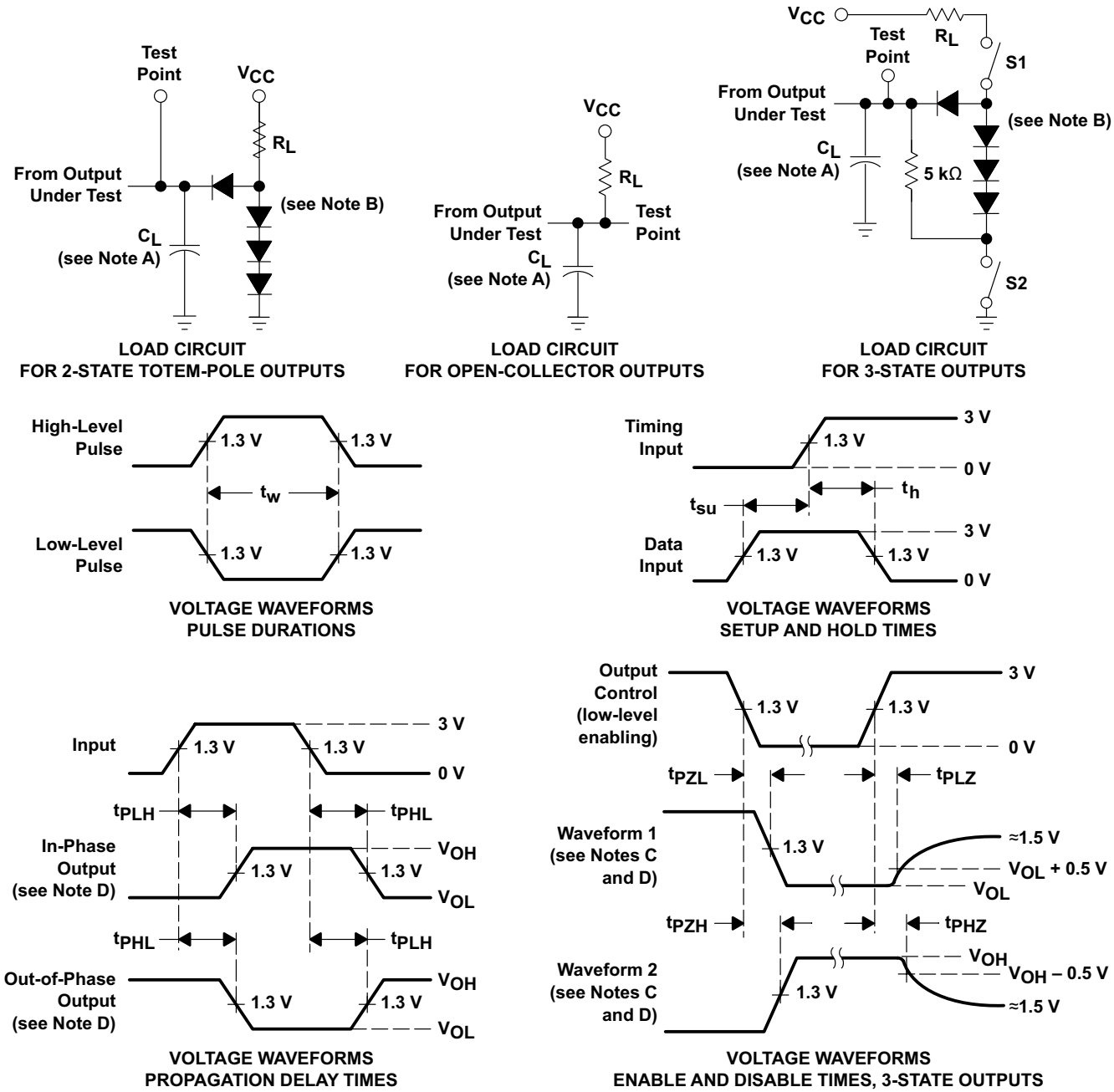

NOTES: A. C_L includes probe and jig capacitance.
B. All diodes are 1N3064 or equivalent.
C. Waveform 1 is for an output with internal conditions such that the output is low except when disabled by the output control. Waveform 2 is for an output with internal conditions such that the output is high except when disabled by the output control.
D. S1 and S2 are closed for t_{PLH}, t_{PHL}, t_{PHZ}, and t_{PLZ}; S1 is open and S2 is closed for t_{PZH}; S1 is closed and S2 is open for t_{PZL}.
E. Phase relationships between inputs and outputs have been chosen arbitrarily for these examples.
F. All input pulses are supplied by generators having the following characteristics: PRR ≤ 1 MHz, Z_O ≈ 50 Ω, t_r ≤ 1.5 ns, t_f ≤ 2.6 ns.
G. The outputs are measured one at a time with one input transition per measurement.

Figure 2. Load Circuits and Voltage Waveforms

9 Detailed Description

9.1 Overview

The SNx4LS245 uses Schottky transistor logic to perform the standard '245 transceiver function. This standard logic function has a common pinout, direction select pin, and active-low output enable. When the outputs are disabled, the A and B sides of the device are effectively isolated.

9.2 Functional Block Diagram

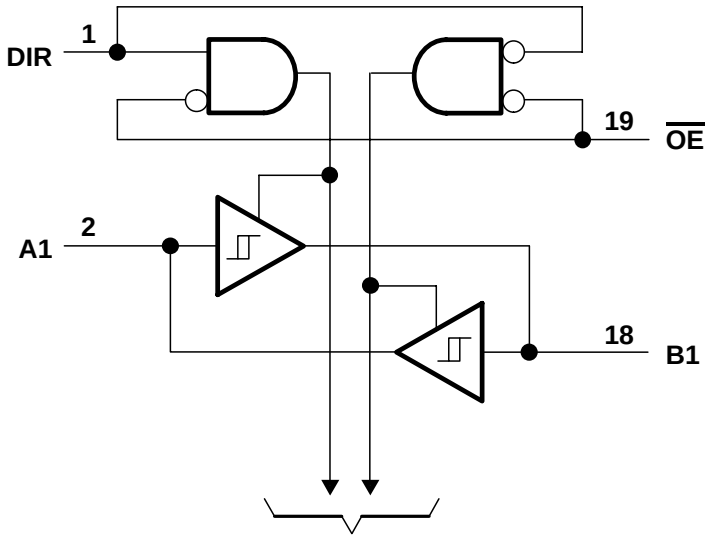

Copyright © 2016, Texas Instruments Incorporated

Figure 3. Logic Diagram (Positive Logic)

9.3 Feature Description

9.3.1 3-State outputs

The 3-state outputs can drive bus lines directly. All outputs can be put into high impedance mode through the $\overline{OE}$ pin.

9.3.2 PNP Inputs

This device has PNP inputs which reduce dc loading on bus lines.

9.3.3 Hysteresis on Bus Inputs

The bus inputs have built-in hysteresis that improves noise margins.

9.4 Device Functional Modes

The SNx4LS245 performs the standard '245 logic function. Data can be transmitted from A to B or from B to A depending on the DIR pin value, or the A and B sides can be isolated from one another by setting the $\overline{OE}$ pin HIGH.

Copyright © 1976–2016, Texas Instruments Incorporated

Table 1. Function Table

INPUTS		OPERATION
$\overline{OE}$	DIR	
L	L	B data to A bus
L	H	A data to B bus
H	X	Isolation

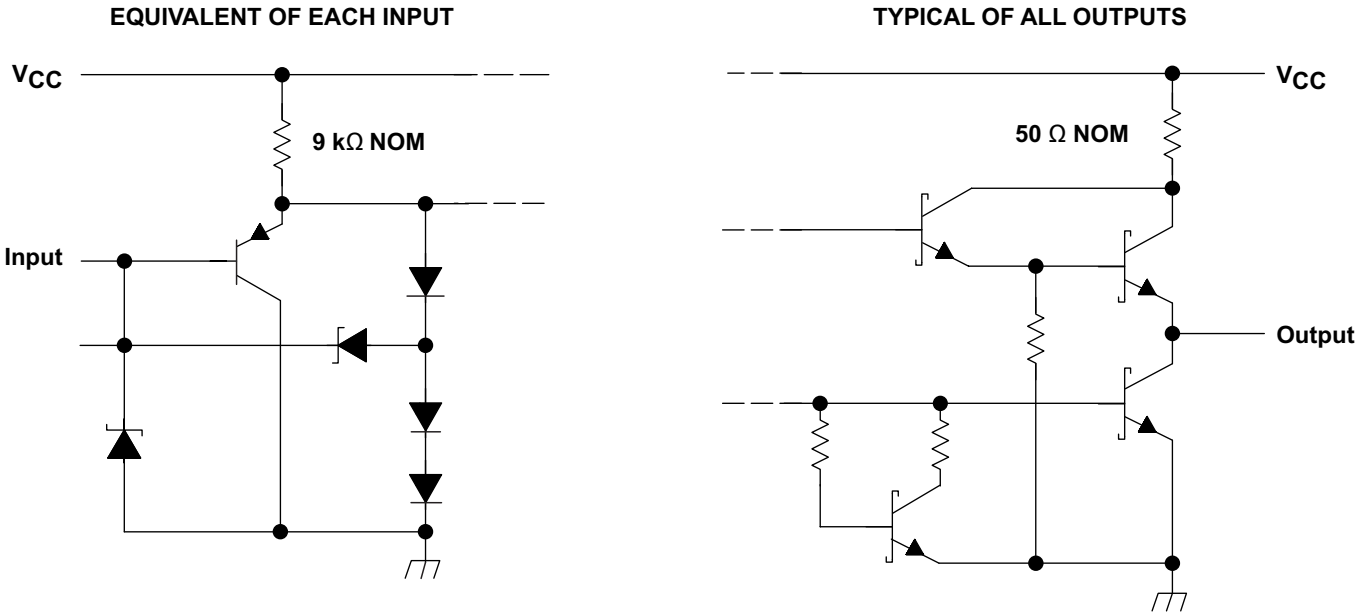

Figure 4. Schematics of Inputs and Outputs

10 Application and Implementation

NOTE

Information in the following applications sections is not part of the TI component specification, and TI does not warrant its accuracy or completeness. TI's customers are responsible for determining suitability of components for their purposes. Customers should validate and test their design implementation to confirm system functionality.

10.1 Application Information

The SNx4LS245 is commonly used to drive ribbon cables or back plane busses. It allows isolation from the bus when necessary, and increases drive strength on the bus.

10.2 Typical Application

Figure 5 shows the SNx4LS245 wired up as a permanently enabled data bus transceiver for both a master and slave device communicating over a ribbon cable or back plane.

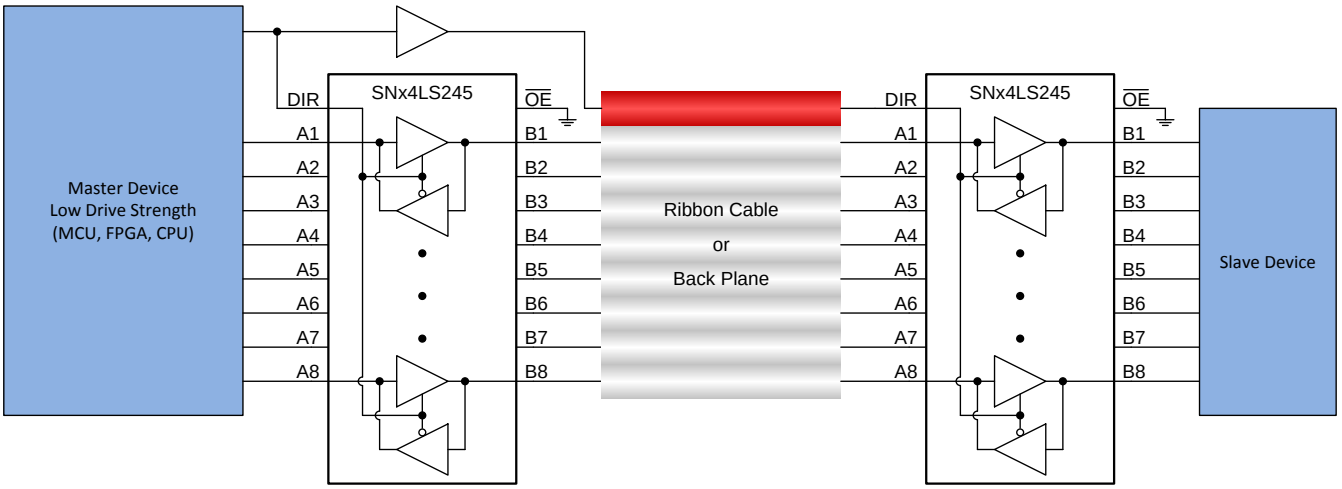

Copyright © 2016, Texas Instruments Incorporated

Figure 5. SNx4LS245 Being Used to Communicate Over a Ribbon Cable or Back Plane

10.2.1 Design Requirements

This device uses Schottky transistor logic technology. Take care to avoid bus contention because it can drive currents that would exceed maximum limits. The high drive creates fast edges into light loads, so routing and load conditions must be considered to prevent ringing.

10.2.2 Detailed Design Procedure

- Power Supply
  - Each device must maintain a supply voltage between 4.5 V and 5.5 V
- Inputs
  - Input signals must meet the V_{IH} and V_{IL} specifications in *Electrical Characteristics*
  - Inputs leakage values (I_I, I_{IH}, I_{IL}) from *Electrical Characteristics* must be considered
- Outputs
  - Output signals are specified to meet the V_{OH} and V_{OL} specifications in *Electrical Characteristics* as a minimum (the values could be closer to V_{CC} for high signals or GND for low signals)
  - TI recommends maintaining output currents as specified in *Recommended Operating Conditions*
  - The part can be damaged by sourcing or sinking too much current. See *Electrical Characteristics* for details.

Copyright © 1976–2016, Texas Instruments Incorporated

Typical Application (continued)

10.2.3 Application Curve

It is common to see significant losses in ribbon cables and back planes. Figure 6 shows a simplified simulation of a ribbon cable from a 5-V, 10-MHz low-drive strength source. It shows the difference between an input signal from a weak driver like an MCU or FPGA compared to a strong driver like the SN74LS245 when measured at the distant end of the cable. By adding a high-current drive transceiver before the cable, the signal strength can be significantly improved, and subsequently the cable can be longer.

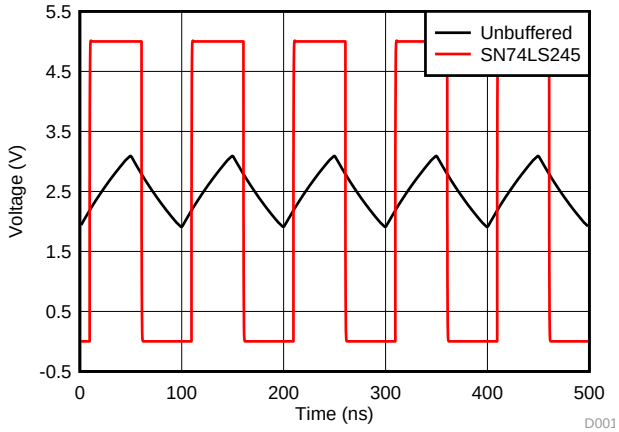

Unbuffered line is directly connected to low current source, SN74LS245 line is buffered through the transceiver. Both signals are measured at the distant end of the ribbon cable. **Input signal is not shown.**

Figure 6. Simulated Outputs From Ribbon Cable With a 5-V, 10-MHz Source

11 Power Supply Recommendations

The power supply can be any voltage between the minimum and maximum supply voltage rating located in *Recommended Operating Conditions*. Each V_{CC} pin must have a good bypass capacitor to prevent power disturbance. For devices with a single supply, TI recommends a 0.1-µF bypass capacitor. If there are multiple V_{CC} pins, TI recommends a 0.01-µF or 0.022-µF bypass capacitors for each power pin. It is acceptable to parallel multiple bypass capacitors to reject different frequencies of noise. Two bypass capacitors of value 0.1 µF and 1 µF are commonly used in parallel. For best results, install the bypass capacitor(s) as close to the power pin as possible.

12 Layout

12.1 Layout Guidelines

When using multiple bit logic devices, inputs must not be left floating. In many applications, some channels of the SNx4LS245 are unused, and thus must be terminated properly. Because each transceiver channel pin can be either an input or an output, they must be treated as both when being terminated. Ground or V_{CC} (whichever is more convenient) can be used to terminate unused inputs; however, each unused channel should be terminated to the same logic level on both the A and B side. For example, in Figure 7 unused channels 4, 5, 6, and 7 are terminated correctly with both sides connected to the same voltage, while channel 8 is terminated incorrectly with each side being tied to a different voltage. The $\overline{OE}$ input is also unused in this example, and is terminated directly to ground to permanently enable all outputs.

12.2 Layout Example

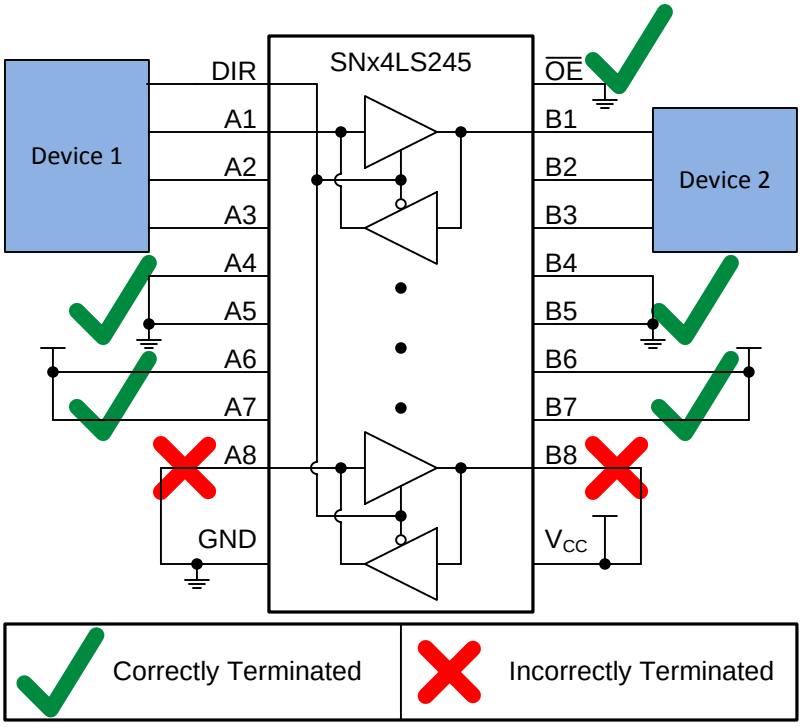

Figure 7. Example Demonstrating How to Terminate Unused Inputs and Channels of a Transceiver

Copyright © 1976–2016, Texas Instruments Incorporated

13 Device and Documentation Support

13.1 Related Links

The table below lists quick access links. Categories include technical documents, support and community resources, tools and software, and quick access to sample or buy.

Table 2. Related Links

PARTS	PRODUCT FOLDER	SAMPLE & BUY	TECHNICAL DOCUMENTS	TOOLS & SOFTWARE	SUPPORT & COMMUNITY
SN54LS245	Click here	Click here	Click here	Click here	Click here
SN74LS245	Click here	Click here	Click here	Click here	Click here

13.2 Receiving Notification of Documentation Updates

To receive notification of documentation updates, navigate to the device product folder on ti.com. In the upper right corner, click on *Alert me* to register and receive a weekly digest of any product information that has changed. For change details, review the revision history included in any revised document.

13.3 Community Resource

The following links connect to TI community resources. Linked contents are provided "AS IS" by the respective contributors. They do not constitute TI specifications and do not necessarily reflect TI's views; see TI's Terms of Use.

TI E2E™ Online Community ***TI's Engineer-to-Engineer (E2E) Community.*** Created to foster collaboration among engineers. At e2e.ti.com, you can ask questions, share knowledge, explore ideas and help solve problems with fellow engineers.

Design Support ***TI's Design Support*** Quickly find helpful E2E forums along with design support tools and contact information for technical support.

13.4 Trademarks

E2E is a trademark of Texas Instruments.
All other trademarks are the property of their respective owners.

13.5 Electrostatic Discharge Caution

These devices have limited built-in ESD protection. The leads should be shorted together or the device placed in conductive foam during storage or handling to prevent electrostatic damage to the MOS gates.

13.6 Glossary

SLYZ022 — *TI Glossary*.

This glossary lists and explains terms, acronyms, and definitions.

14 Mechanical, Packaging, and Orderable Information

The following pages include mechanical, packaging, and orderable information. This information is the most current data available for the designated devices. This data is subject to change without notice and revision of this document. For browser-based versions of this data sheet, refer to the left-hand navigation.

PACKAGING INFORMATION

Orderable Device	Status (1)	Package Type	Package Drawing	Pins	Package Qty	Eco Plan (2)	Lead finish/ Ball material (6)	MSL Peak Temp (3)	Op Temp (°C)	Device Marking (4/5)	Samples
5962-8002101VSA	ACTIVE	CFP	W	20	1	Non-RoHS & Green	SNPB	N / A for Pkg Type	-55 to 125	5962-8002101VS A SNV54LS245W	Samples
80021012A	ACTIVE	LCCC	FK	20	1	Non-RoHS & Green	SNPB	N / A for Pkg Type	-55 to 125	80021012A SNJ54LS 245FK	Samples
8002101SA	ACTIVE	CFP	W	20	1	Non-RoHS & Green	SNPB	N / A for Pkg Type	-55 to 125	8002101SA SNJ54LS245W	Samples
JM38510/32803B2A	ACTIVE	LCCC	FK	20	1	Non-RoHS & Green	SNPB	N / A for Pkg Type	-55 to 125	JM38510/ 32803B2A	Samples
JM38510/32803BRA	ACTIVE	CDIP	J	20	1	Non-RoHS & Green	SNPB	N / A for Pkg Type	-55 to 125	JM38510/ 32803BRA	Samples
JM38510/32803BSA	ACTIVE	CFP	W	20	1	Non-RoHS & Green	SNPB	N / A for Pkg Type	-55 to 125	JM38510/ 32803BSA	Samples
M38510/32803B2A	ACTIVE	LCCC	FK	20	1	Non-RoHS & Green	SNPB	N / A for Pkg Type	-55 to 125	JM38510/ 32803B2A	Samples
M38510/32803BRA	ACTIVE	CDIP	J	20	1	Non-RoHS & Green	SNPB	N / A for Pkg Type	-55 to 125	JM38510/ 32803BRA	Samples
M38510/32803BSA	ACTIVE	CFP	W	20	1	Non-RoHS & Green	SNPB	N / A for Pkg Type	-55 to 125	JM38510/ 32803BSA	Samples
SN54LS245J	ACTIVE	CDIP	J	20	1	Non-RoHS & Green	SNPB	N / A for Pkg Type	-55 to 125	SN54LS245J	Samples
SN74LS245DBR	ACTIVE	SSOP	DB	20	2000	RoHS & Green	NIPDAU	Level-1-260C-UNLIM	0 to 70	LS245	Samples
SN74LS245DBRG4	ACTIVE	SSOP	DB	20	2000	TBD	Call TI	Call TI	0 to 70		Samples
SN74LS245DW	ACTIVE	SOIC	DW	20	25	RoHS & Green	NIPDAU	Level-1-260C-UNLIM	0 to 70	LS245	Samples
SN74LS245DWR	ACTIVE	SOIC	DW	20	2000	RoHS & Green	NIPDAU	Level-1-260C-UNLIM	0 to 70	LS245	Samples
SN74LS245N	ACTIVE	PDIP	N	20	20	RoHS & Green	NIPDAU	N / A for Pkg Type	0 to 70	SN74LS245N	Samples
SN74LS245NE4	ACTIVE	PDIP	N	20	20	RoHS & Green	NIPDAU	N / A for Pkg Type	0 to 70	SN74LS245N	Samples
SN74LS245NSR	ACTIVE	SO	NS	20	2000	RoHS & Green	NIPDAU	Level-1-260C-UNLIM	0 to 70	74LS245	Samples

Orderable Device	Status (1)	Package Type	Package Drawing	Pins	Package Qty	Eco Plan (2)	Lead finish/ Ball material (6)	MSL Peak Temp (3)	Op Temp (°C)	Device Marking (4/5)	Samples
SNJ54LS245FK	ACTIVE	LCCC	FK	20	1	Non-RoHS & Green	SNPB	N / A for Pkg Type	-55 to 125	80021012A SNJ54LS 245FK	Samples
SNJ54LS245J	ACTIVE	CDIP	J	20	1	Non-RoHS & Green	SNPB	N / A for Pkg Type	-55 to 125	SNJ54LS245J	Samples
SNJ54LS245W	ACTIVE	CFP	W	20	1	Non-RoHS & Green	SNPB	N / A for Pkg Type	-55 to 125	8002101SA SNJ54LS245W	Samples

(1) The marketing status values are defined as follows:
ACTIVE: Product device recommended for new designs.
LIFEBUY: TI has announced that the device will be discontinued, and a lifetime-buy period is in effect.
NRND: Not recommended for new designs. Device is in production to support existing customers, but TI does not recommend using this part in a new design.
PREVIEW: Device has been announced but is not in production. Samples may or may not be available.
OBSOLETE: TI has discontinued the production of the device.

(2) **RoHS:** TI defines "RoHS" to mean semiconductor products that are compliant with the current EU RoHS requirements for all 10 RoHS substances, including the requirement that RoHS substance do not exceed 0.1% by weight in homogeneous materials. Where designed to be soldered at high temperatures, "RoHS" products are suitable for use in specified lead-free processes. TI may reference these types of products as "Pb-Free".
RoHS Exempt: TI defines "RoHS Exempt" to mean products that contain lead but are compliant with EU RoHS pursuant to a specific EU RoHS exemption.
Green: TI defines "Green" to mean the content of Chlorine (Cl) and Bromine (Br) based flame retardants meet JS709B low halogen requirements of <=1000ppm threshold. Antimony trioxide based flame retardants must also meet the <=1000ppm threshold requirement.

(3) MSL, Peak Temp. - The Moisture Sensitivity Level rating according to the JEDEC industry standard classifications, and peak solder temperature.

(4) There may be additional marking, which relates to the logo, the lot trace code information, or the environmental category on the device.

(5) Multiple Device Markings will be inside parentheses. Only one Device Marking contained in parentheses and separated by a "~" will appear on a device. If a line is indented then it is a continuation of the previous line and the two combined represent the entire Device Marking for that device.

(6) Lead finish/Ball material - Orderable Devices may have multiple material finish options. Finish options are separated by a vertical ruled line. Lead finish/Ball material values may wrap to two lines if the finish value exceeds the maximum column width.

Important Information and Disclaimer: The information provided on this page represents TI's knowledge and belief as of the date that it is provided. TI bases its knowledge and belief on information provided by third parties, and makes no representation or warranty as to the accuracy of such information. Efforts are underway to better integrate information from third parties. TI has taken and continues to take reasonable steps to provide representative and accurate information but may not have conducted destructive testing or chemical analysis on incoming materials and chemicals. TI and TI suppliers consider certain information to be proprietary, and thus CAS numbers and other limited information may not be available for release.

In no event shall TI's liability arising out of such information exceed the total purchase price of the TI part(s) at issue in this document sold by TI to Customer on an annual basis.

OTHER QUALIFIED VERSIONS OF SN54LS245, SN54LS245-SP, SN74LS245 :

- Catalog : SN74LS245, SN54LS245
- Military : SN54LS245
- Space : SN54LS245-SP

NOTE: Qualified Version Definitions:

- Catalog - TI's standard catalog product
- Military - QML certified for Military and Defense Applications
- Space - Radiation tolerant, ceramic packaging and qualified for use in Space-based application

TAPE AND REEL INFORMATION

REEL DIMENSIONS

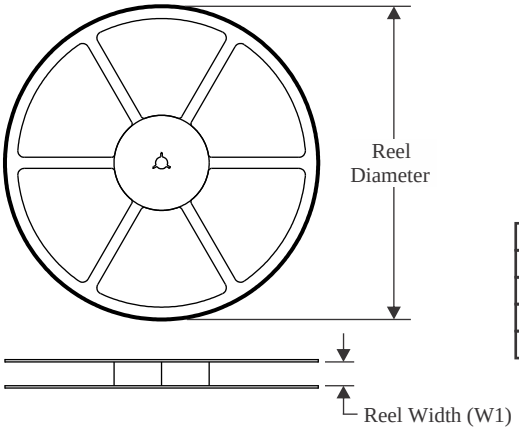

TAPE DIMENSIONS

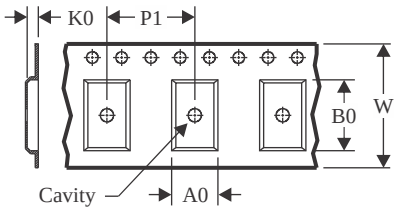

A0	Dimension designed to accommodate the component width
B0	Dimension designed to accommodate the component length
K0	Dimension designed to accommodate the component thickness
W	Overall width of the carrier tape
P1	Pitch between successive cavity centers

QUADRANT ASSIGNMENTS FOR PIN 1 ORIENTATION IN TAPE

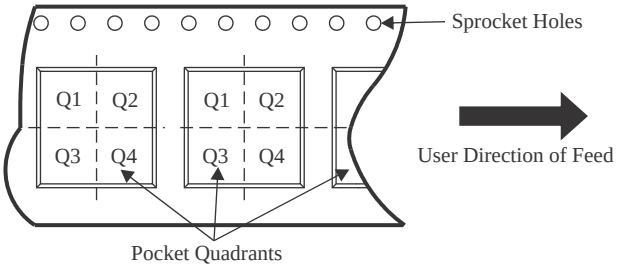

*All dimensions are nominal

Device	Package Type	Package Drawing	Pins	SPQ	Reel Diameter (mm)	Reel Width W1 (mm)	A0 (mm)	B0 (mm)	K0 (mm)	P1 (mm)	W (mm)	Pin1 Quadrant
SN74LS245DBR	SSOP	DB	20	2000	330.0	16.4	8.2	7.5	2.5	12.0	16.0	Q1
SN74LS245DWR	SOIC	DW	20	2000	330.0	24.4	10.8	13.3	2.7	12.0	24.0	Q1
SN74LS245NSR	SO	NS	20	2000	330.0	24.4	8.4	13.0	2.5	12.0	24.0	Q1

TAPE AND REEL BOX DIMENSIONS

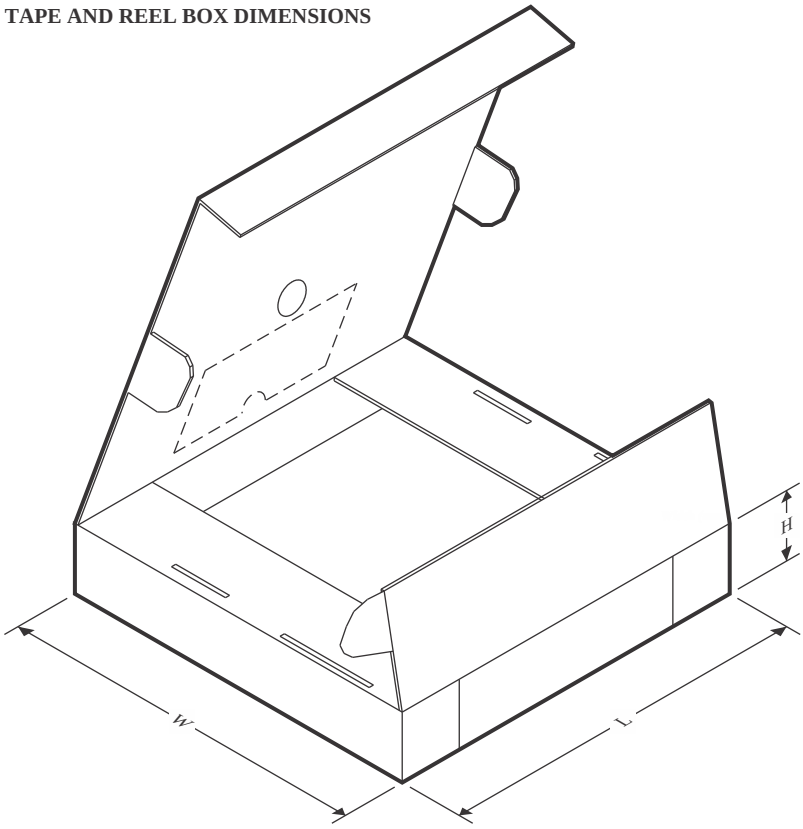

*All dimensions are nominal

Device	Package Type	Package Drawing	Pins	SPQ	Length (mm)	Width (mm)	Height (mm)
SN74LS245DBR	SSOP	DB	20	2000	356.0	356.0	35.0
SN74LS245DWR	SOIC	DW	20	2000	367.0	367.0	45.0
SN74LS245NSR	SO	NS	20	2000	367.0	367.0	45.0

TUBE

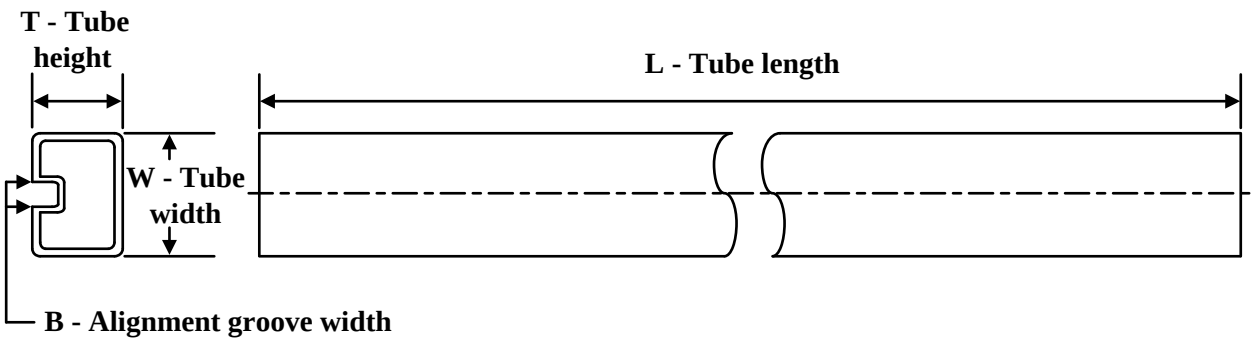

*All dimensions are nominal

Device	Package Name	Package Type	Pins	SPQ	L (mm)	W (mm)	T (µm)	B (mm)
5962-8002101VSA	W	CFP	20	1	506.98	26.16	6220	NA
80021012A	FK	LCCC	20	1	506.98	12.06	2030	NA
8002101SA	W	CFP	20	1	506.98	26.16	6220	NA
JM38510/32803B2A	FK	LCCC	20	1	506.98	12.06	2030	NA
JM38510/32803BSA	W	CFP	20	1	506.98	26.16	6220	NA
M38510/32803B2A	FK	LCCC	20	1	506.98	12.06	2030	NA
M38510/32803BSA	W	CFP	20	1	506.98	26.16	6220	NA
SN74LS245DW	DW	SOIC	20	25	507	12.83	5080	6.6
SN74LS245N	N	PDIP	20	20	506	13.97	11230	4.32
SN74LS245NE4	N	PDIP	20	20	506	13.97	11230	4.32
SNJ54LS245FK	FK	LCCC	20	1	506.98	12.06	2030	NA
SNJ54LS245W	W	CFP	20	1	506.98	26.16	6220	NA

W (R–GDFP–F20) CERAMIC DUAL FLATPACK

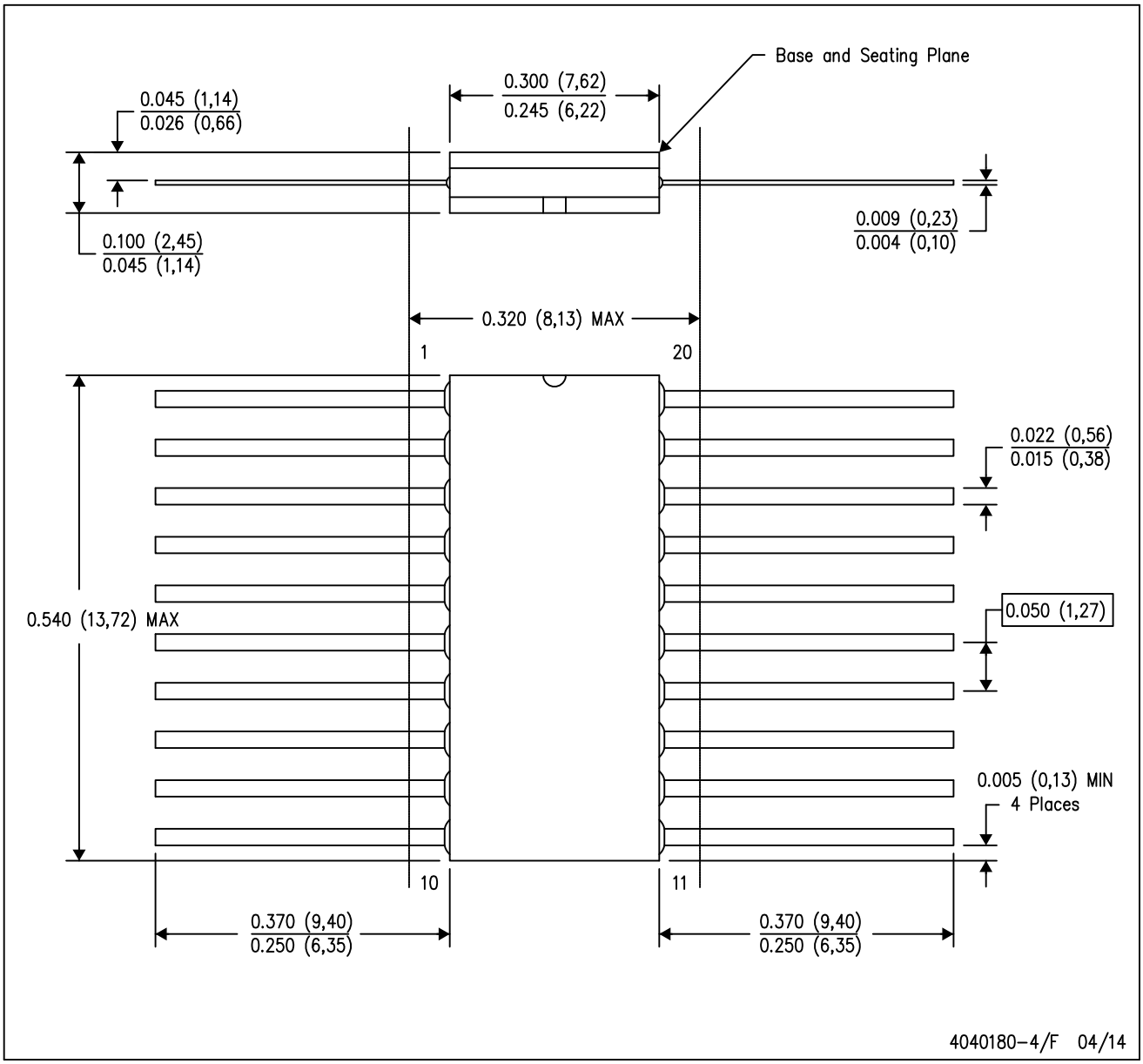

NOTES:
A. All linear dimensions are in inches (millimeters).
B. This drawing is subject to change without notice.
C. This package can be hermetically sealed with a ceramic lid using glass frit.
D. Index point is provided on cap for terminal identification only.
E. Falls within Mil–Std 1835 GDFP2–F20

FK (S–CQCC–N**) LEADLESS CERAMIC CHIP CARRIER

28 TERMINAL SHOWN

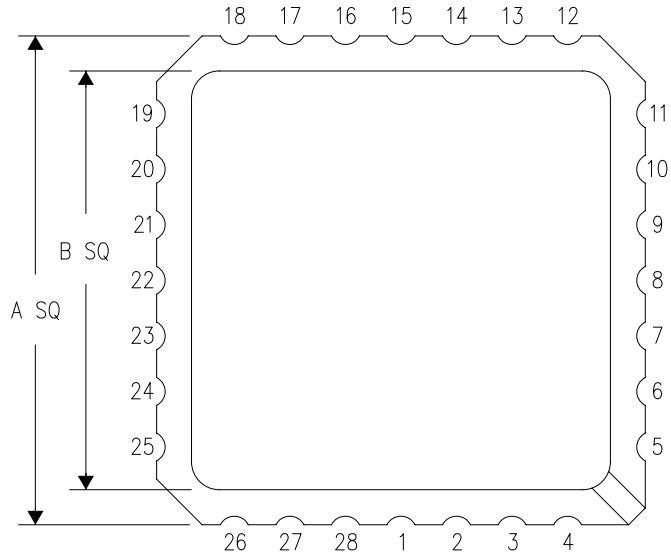

NO. OF TERMINALS **	A		B	
	MIN	MAX	MIN	MAX
20	0.342 (8,69)	0.358 (9,09)	0.307 (7,80)	0.358 (9,09)
28	0.442 (11,23)	0.458 (11,63)	0.406 (10,31)	0.458 (11,63)
44	0.640 (16,26)	0.660 (16,76)	0.495 (12,58)	0.560 (14,22)
52	0.740 (18,78)	0.761 (19,32)	0.495 (12,58)	0.560 (14,22)
68	0.938 (23,83)	0.962 (24,43)	0.850 (21,6)	0.858 (21,8)
84	1.141 (28,99)	1.165 (29,59)	1.047 (26,6)	1.063 (27,0)

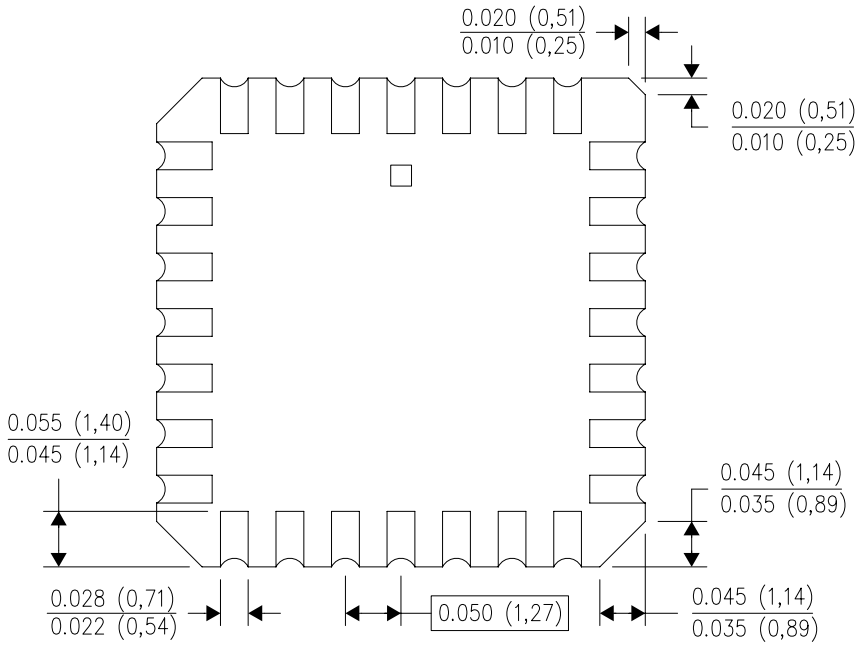

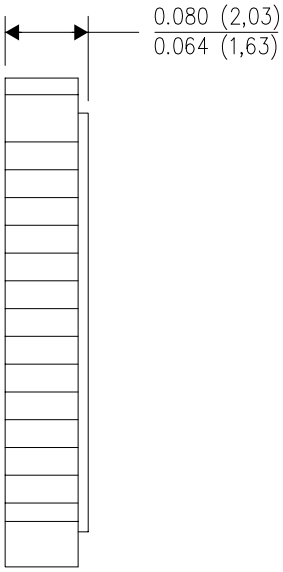

4040140/D 01/11

NOTES:
A. All linear dimensions are in inches (millimeters).
B. This drawing is subject to change without notice.
C. This package can be hermetically sealed with a metal lid.
D. Falls within JEDEC MS–004

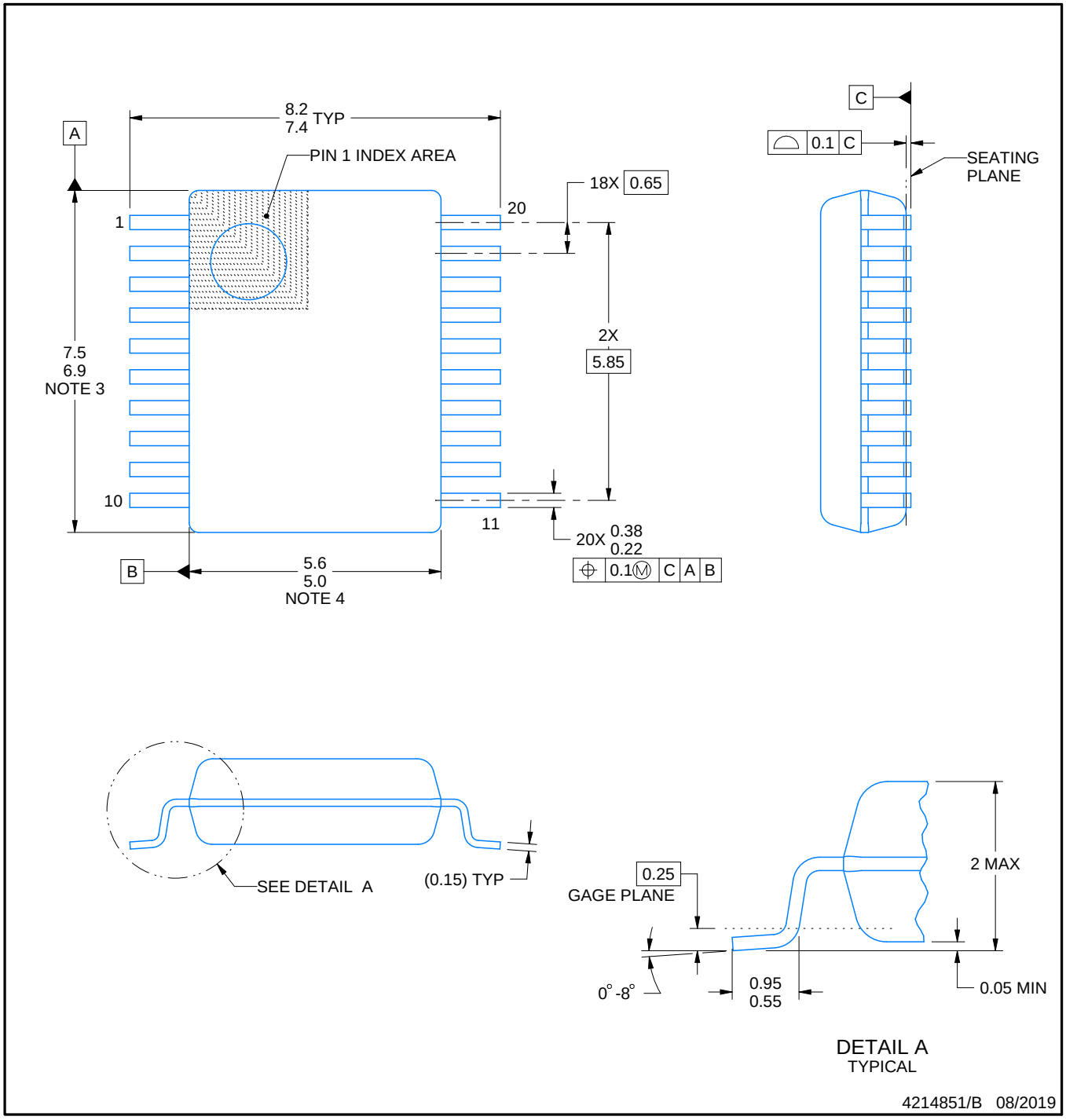

NOTES:

1. All linear dimensions are in millimeters. Any dimensions in parenthesis are for reference only. Dimensioning and tolerancing per ASME Y14.5M.
2. This drawing is subject to change without notice.
3. This dimension does not include mold flash, protrusions, or gate burrs. Mold flash, protrusions, or gate burrs shall not exceed 0.15 mm per side.
4. This dimension does not include interlead flash. Interlead flash shall not exceed 0.25 mm per side.
5. Reference JEDEC registration MO-150.

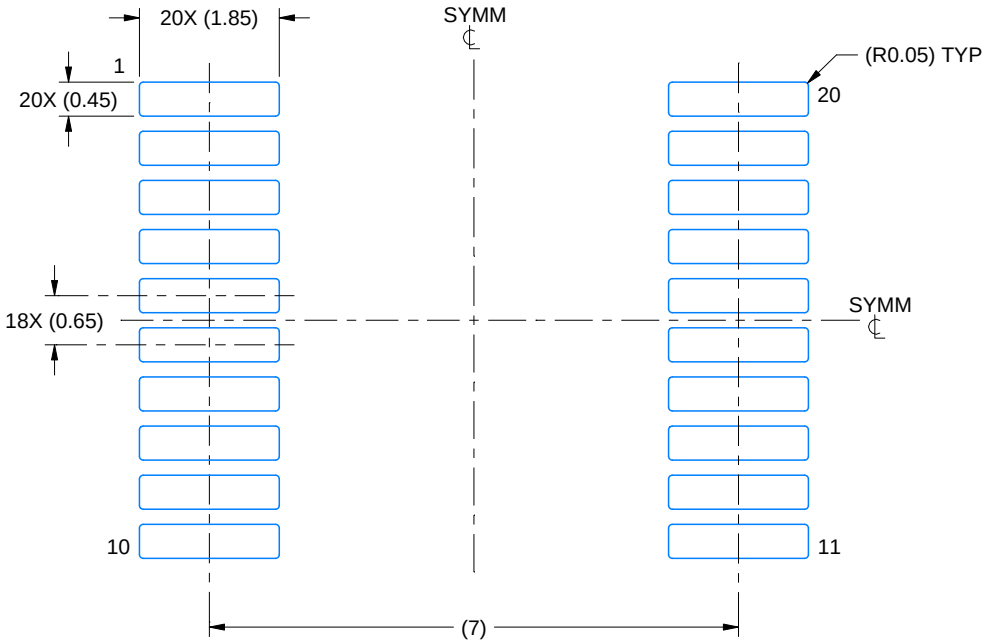

LAND PATTERN EXAMPLE
EXPOSED METAL SHOWN
SCALE: 10X

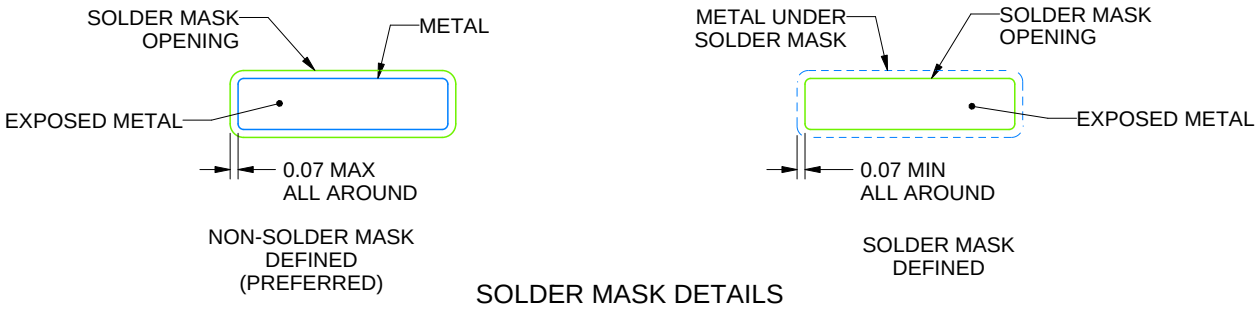

SOLDER MASK DETAILS

4214851/B 08/2019

NOTES: (continued)

6. Publication IPC-7351 may have alternate designs.
7. Solder mask tolerances between and around signal pads can vary based on board fabrication site.

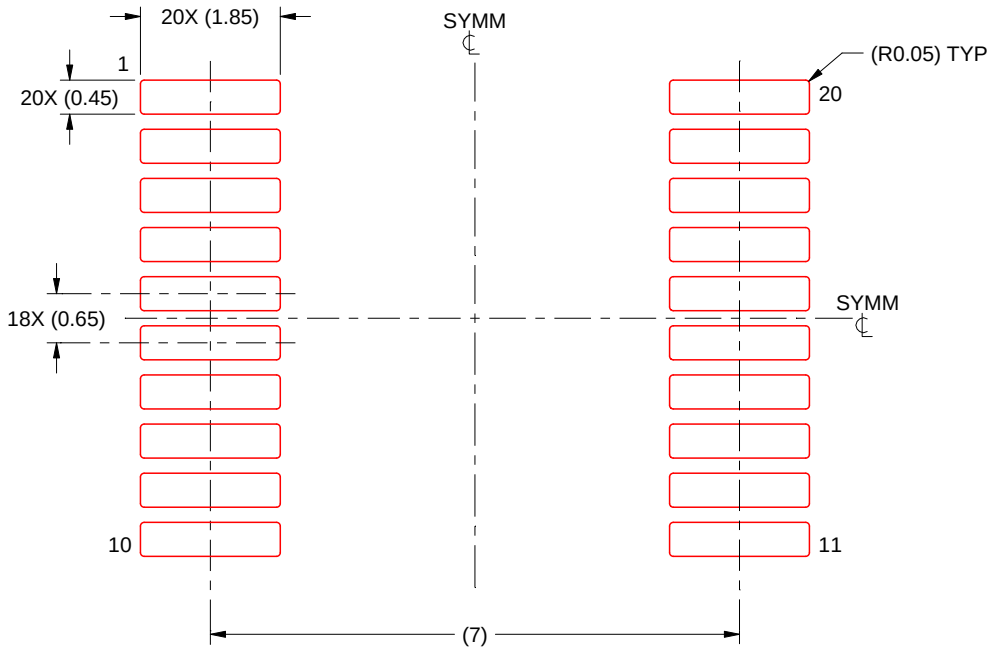

SOLDER PASTE EXAMPLE
BASED ON 0.125 mm THICK STENCIL
SCALE: 10X

4214851/B 08/2019

NOTES: (continued)

8. Laser cutting apertures with trapezoidal walls and rounded corners may offer better paste release. IPC-7525 may have alternate design recommendations.
9. Board assembly site may have different recommendations for stencil design.

MECHANICAL DATA

NS (R-PDSO-G)** **PLASTIC SMALL-OUTLINE PACKAGE**

14-PINS SHOWN

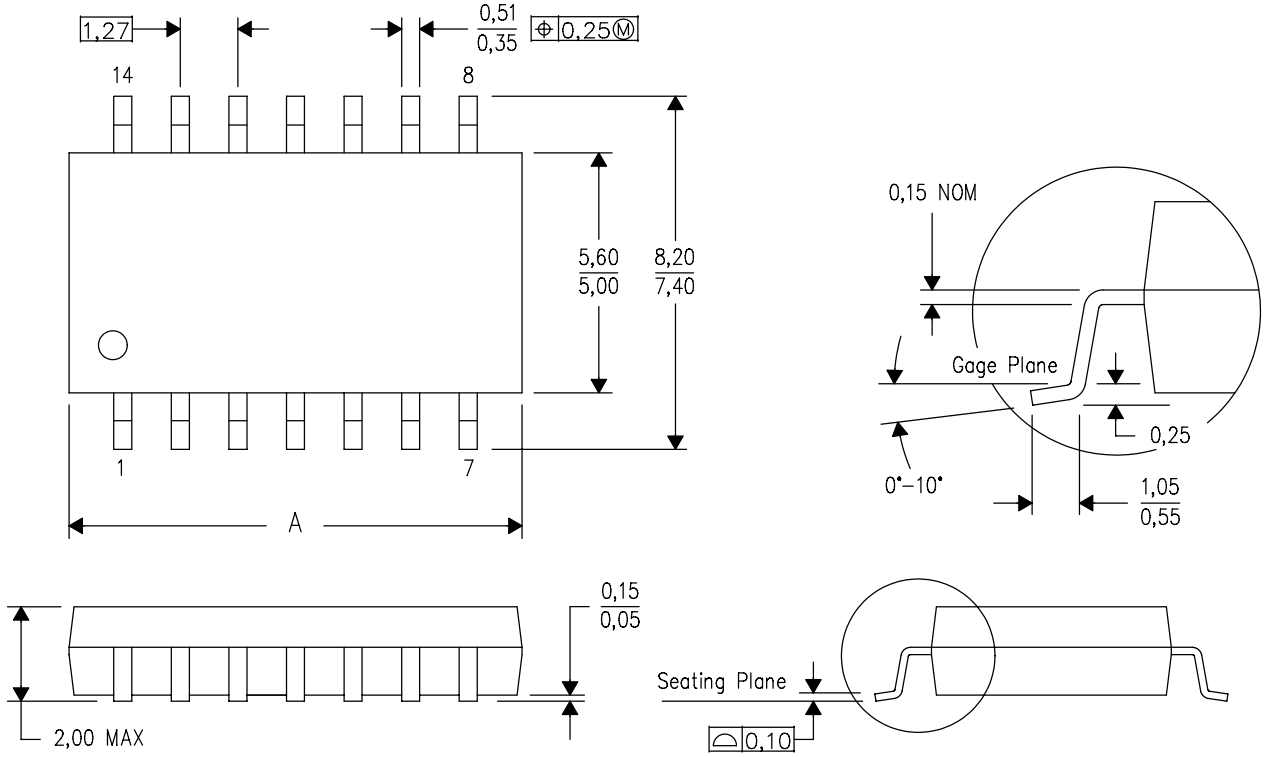

DIM \ PINS **	14	16	20	24
A MAX	10,50	10,50	12,90	15,30
A MIN	9,90	9,90	12,30	14,70

4040062/C 03/03

NOTES:
A. All linear dimensions are in millimeters.
B. This drawing is subject to change without notice.
C. Body dimensions do not include mold flash or protrusion, not to exceed 0,15.

J (R–GDIP–T**) CERAMIC DUAL IN–LINE PACKAGE

14 LEADS SHOWN

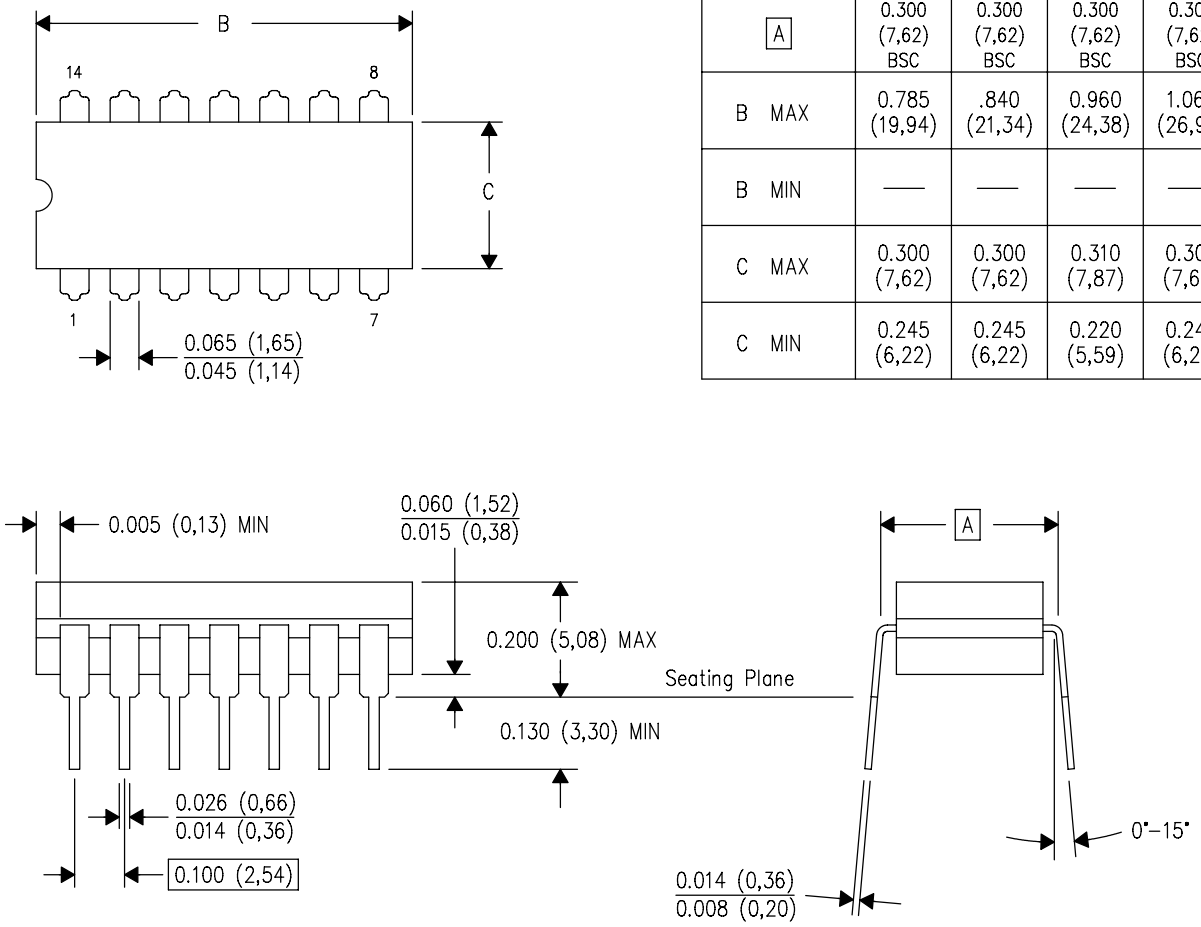

DIM \ PINS **	14	16	18	20
A	0.300 (7,62) BSC	0.300 (7,62) BSC	0.300 (7,62) BSC	0.300 (7,62) BSC
B MAX	0.785 (19,94)	.840 (21,34)	0.960 (24,38)	1.060 (26,92)
B MIN	—	—	—	—
C MAX	0.300 (7,62)	0.300 (7,62)	0.310 (7,87)	0.300 (7,62)
C MIN	0.245 (6,22)	0.245 (6,22)	0.220 (5,59)	0.245 (6,22)

4040083/F 03/03

NOTES:
- A. All linear dimensions are in inches (millimeters).
- B. This drawing is subject to change without notice.
- C. This package is hermetically sealed with a ceramic lid using glass frit.
- D. Index point is provided on cap for terminal identification only on press ceramic glass frit seal only.
- E. Falls within MIL STD 1835 GDIP1–T14, GDIP1–T16, GDIP1–T18 and GDIP1–T20.

N (R–PDIP–T**) PLASTIC DUAL–IN–LINE PACKAGE

16 PINS SHOWN

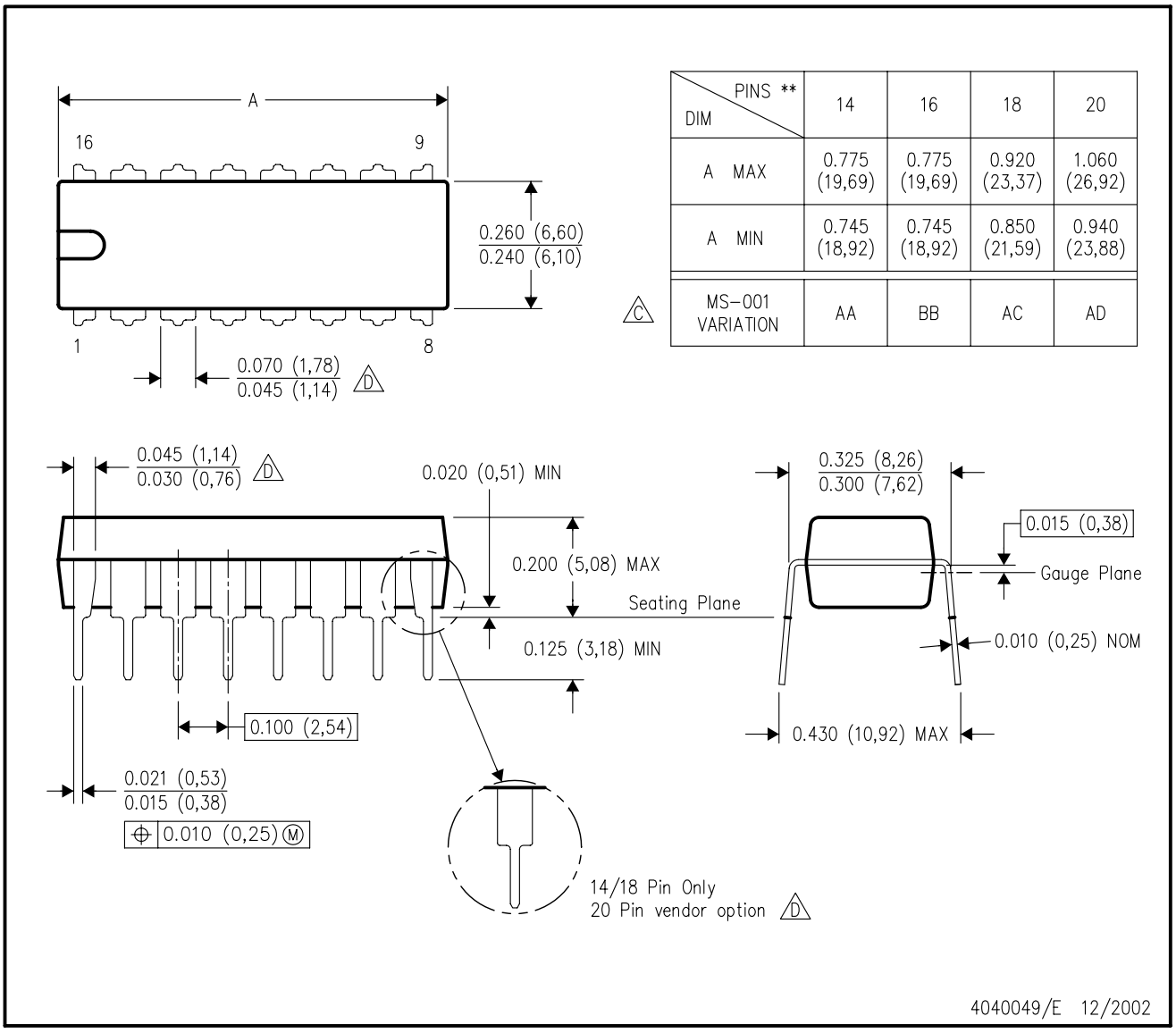

DIM \ PINS **	14	16	18	20
A MAX	0.775 (19,69)	0.775 (19,69)	0.920 (23,37)	1.060 (26,92)
A MIN	0.745 (18,92)	0.745 (18,92)	0.850 (21,59)	0.940 (23,88)
MS–001 VARIATION (C)	AA	BB	AC	AD

NOTES:
A. All linear dimensions are in inches (millimeters).
B. This drawing is subject to change without notice.
C. Falls within JEDEC MS–001, except 18 and 20 pin minimum body length (Dim A).
D. The 20 pin end lead shoulder width is a vendor option, either half or full width.

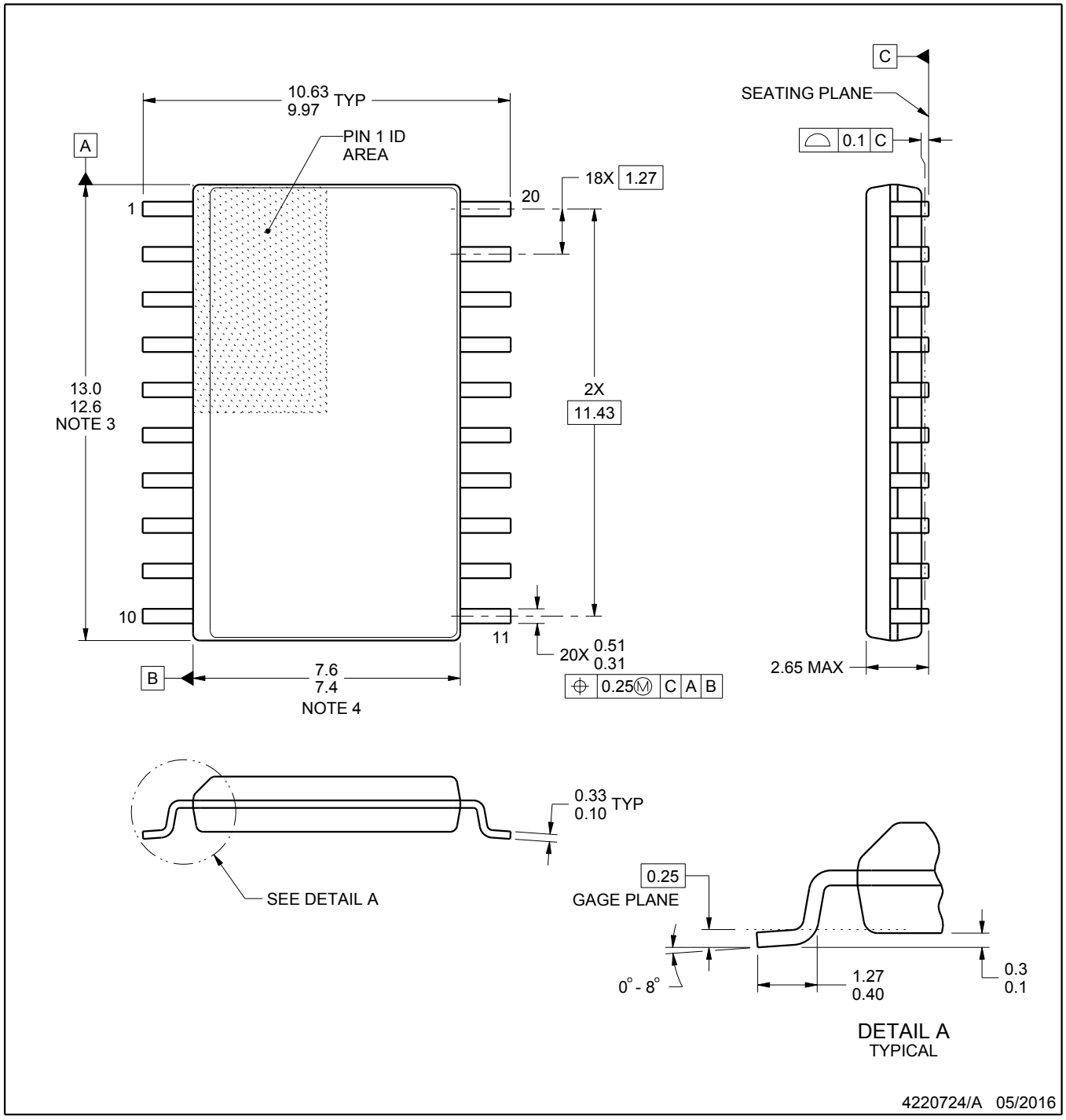

NOTES:

1. All linear dimensions are in millimeters. Dimensions in parenthesis are for reference only. Dimensioning and tolerancing per ASME Y14.5M.
2. This drawing is subject to change without notice.
3. This dimension does not include mold flash, protrusions, or gate burrs. Mold flash, protrusions, or gate burrs shall not exceed 0.15 mm per side.
4. This dimension does not include interlead flash. Interlead flash shall not exceed 0.43 mm per side.
5. Reference JEDEC registration MS-013.

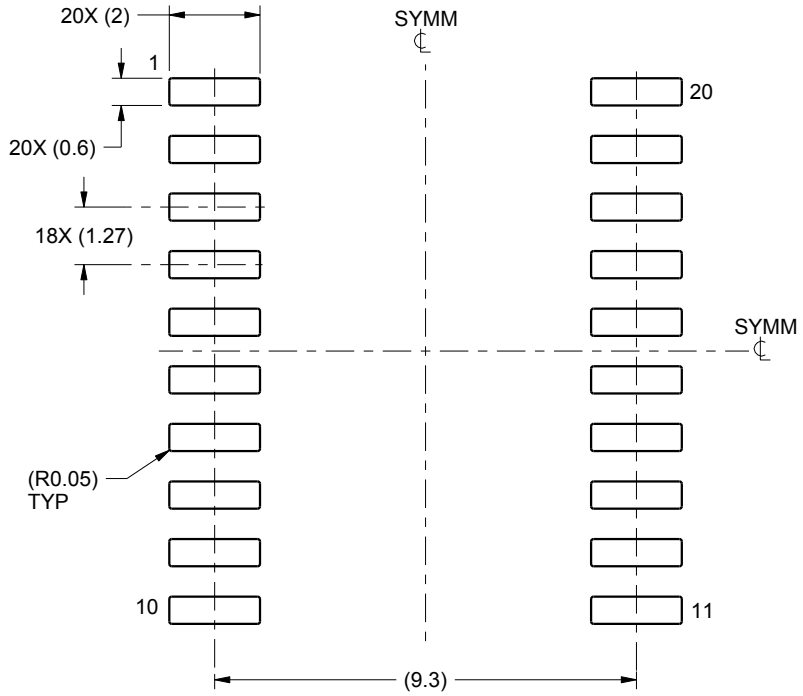

LAND PATTERN EXAMPLE
SCALE:6X

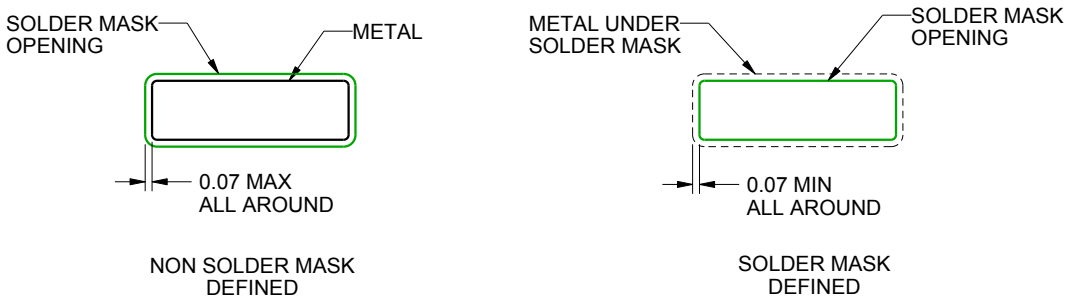

SOLDER MASK DETAILS

4220724/A 05/2016

NOTES: (continued)

6. Publication IPC-7351 may have alternate designs.
7. Solder mask tolerances between and around signal pads can vary based on board fabrication site.

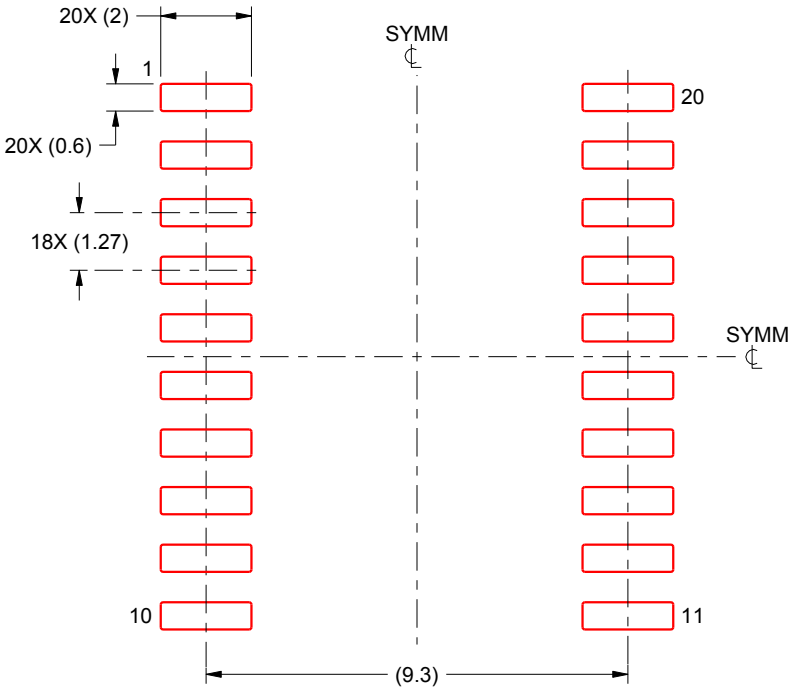

SOLDER PASTE EXAMPLE
BASED ON 0.125 mm THICK STENCIL
SCALE:6X

4220724/A 05/2016

NOTES: (continued)

8. Laser cutting apertures with trapezoidal walls and rounded corners may offer better paste release. IPC-7525 may have alternate design recommendations.
9. Board assembly site may have different recommendations for stencil design.

IMPORTANT NOTICE AND DISCLAIMER

TI PROVIDES TECHNICAL AND RELIABILITY DATA (INCLUDING DATA SHEETS), DESIGN RESOURCES (INCLUDING REFERENCE DESIGNS), APPLICATION OR OTHER DESIGN ADVICE, WEB TOOLS, SAFETY INFORMATION, AND OTHER RESOURCES “AS IS” AND WITH ALL FAULTS, AND DISCLAIMS ALL WARRANTIES, EXPRESS AND IMPLIED, INCLUDING WITHOUT LIMITATION ANY IMPLIED WARRANTIES OF MERCHANTABILITY, FITNESS FOR A PARTICULAR PURPOSE OR NON-INFRINGEMENT OF THIRD PARTY INTELLECTUAL PROPERTY RIGHTS.

These resources are intended for skilled developers designing with TI products. You are solely responsible for (1) selecting the appropriate TI products for your application, (2) designing, validating and testing your application, and (3) ensuring your application meets applicable standards, and any other safety, security, regulatory or other requirements.

These resources are subject to change without notice. TI grants you permission to use these resources only for development of an application that uses the TI products described in the resource. Other reproduction and display of these resources is prohibited. No license is granted to any other TI intellectual property right or to any third party intellectual property right. TI disclaims responsibility for, and you will fully indemnify TI and its representatives against, any claims, damages, costs, losses, and liabilities arising out of your use of these resources.

TI’s products are provided subject to TI’s Terms of Sale or other applicable terms available either on ti.com or provided in conjunction with such TI products. TI’s provision of these resources does not expand or otherwise alter TI’s applicable warranties or warranty disclaimers for TI products.

TI objects to and rejects any additional or different terms you may have proposed.

Mailing Address: Texas Instruments, Post Office Box 655303, Dallas, Texas 75265
Copyright © 2022, Texas Instruments Incorporated