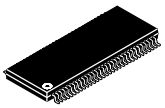

1:8 LVTTL TO M-LVDS REPEATER DUAL 1:4 LVTTL TO M-LVDS REPEATER

FEATURES

- **LVTTL Receiver and Eight Line Drivers Configured as an 8-Port M-LVDS Repeater – SN65MLVD128**
- **2 LVTTL Receivers and Eight Line Drivers Configured as Dual 4-Port M-LVDS Repeaters – SN65MLVD129**
- **Drivers Meet or Exceed the M-LVDS Standard (TIA/EIA-899)**
- **Low-Voltage Differential 30-Ω to 55-Ω Line Drivers for Data Rates (1) Up to 250 Mbps or Clock Frequencies Up to 125 MHz**
- **Power Up/Down Glitch Free**
- **Controlled Driver Output Voltage Transition Times for Improved Signal Quality**

(1) The data rate of a line, is the number of voltage transitions that are made per second expressed in the units bps (bits per second).

- **Bus Pins High Impedance When Disabled or $V_{CC} \leq 1.5$ V**
- **Independent Enables for each Driver**
- **Output-to-Ouput Skew $t_{sk(o)} \leq 160$ ps Part-to-Part Skew $t_{sk(pp)} \leq 800$ ps**
- **Single 3.3-V Voltage Supply**
- **Bus Pin ESD Protection Exceeds 9 kV**
- **Packaged in 48-Pin TSSOP (DGG)**

APPLICATIONS

- **AdvancedTCA™ (ATCA™) Clock Bus Driver**
- **Clock Distribution**
- **Data and Clock Repeating Over Backplanes and Cables**
- **Cellular Base Stations**
- **Central Office Switches**
- **Network Switches and Routers**

LOGIC DIAGRAM

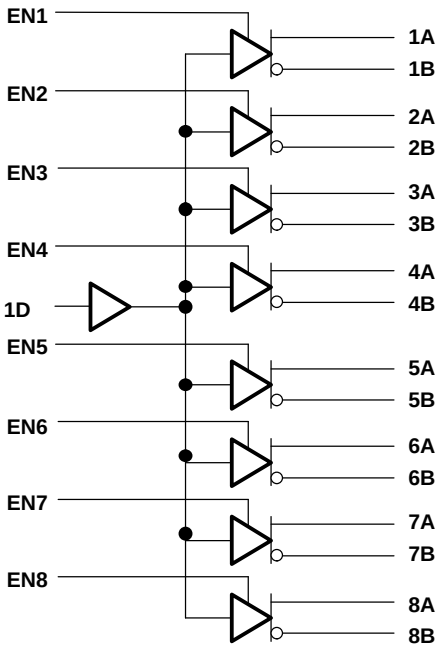

SN65MLVD128

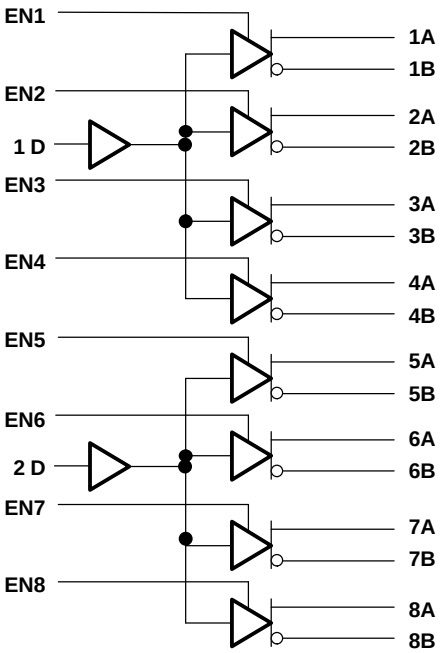

SN65MLVD129

Please be aware that an important notice concerning availability, standard warranty, and use in critical applications of Texas Instruments semiconductor products and disclaimers thereto appears at the end of this data sheet.

AdvancedTCA, ATCA are trademarks of PCI Industrial Computer Manufacturers Group.

PRODUCTION DATA information is current as of publication date. Products conform to specifications per the terms of the Texas Instruments standard warranty. Production processing does not necessarily include testing of all parameters.

Copyright © 2004, Texas Instruments Incorporated

These devices have limited built-in ESD protection. The leads should be shorted together or the device placed in conductive foam during storage or handling to prevent electrostatic damage to the MOS gates.

DESCRIPTION

The SN65MLVD128 and SN65MLVD129 are LVTTL-to-M-LVDS translators/repeaters. Outputs comply with the M-LVDS standard (TIA/EIA-899) and are optimized for data rates up to 250 Mbps, and clock frequencies up to 125 MHz. The driver outputs have been designed to support multipoint buses presenting loads as low as 30 Ω and incorporates controlled transition times for backbone operation.

M-LVDS compliant devices allow for 32 nodes on a common bus, providing a high-speed replacement for RS-485 devices when lower common-mode voltage range and lower output signaling levels are acceptable. The SN65MLVD128 and SN65MLVD129 provide separate driver enables, allowing for independent control of each output signal.

Intended applications for these devices include transmission of clock signals from a central clock module, as well as translation and buffering of data or control signals for transmission through a controlled impedance backplane or cable.

ORDERING INFORMATION

PART NUMBER	INPUT/OUTPUT CHANNEL	PART MARKING	PACKAGE/CARRIER
SN65MLVD128DGG	1:8	MLVD128	48-Pin TSSOP/Tube
SM65MLVD128DGGR	1:8	MLVD128	48-Pin TSSOP/Tape and Reeled
SN65MLVD129DGG	Dual 1:4	MLVD129	48-Pin TSSOP/Tube
SM65MLVD129DGGR	Dual 1:4	MLVD129	48-Pin TSSOP/Tape and Reeled

PACKAGE DISSIPATION RATINGS

PACKAGE	PCB JEDEC STANDARD	$T_A \leq 25°C$ POWER RATING	DERATING FACTOR(1) ABOVE $T_A = 25°C$	$T_A = 85°C$ POWER RATING
48-DGG	Low-K(2)	1114.6 mW	9.7 mW/°C	533.1 mW
48-DGG	High-K(3)	1824.5 mW	15.9 mW/°C	872.6 mw

(1) This is the inverse of the junction-to-ambient thermal resistance when board mounted and with no air flow.
(2) In accordance with the Low-K thermal metric definitions of EIA/JESD51-3.
(3) In accordance with the High-K thermal metric definitions of EIA/JESD51-7.

ABSOLUTE MAXIMUM RATINGS

over operating free-air temperature range unless otherwise noted(1)

				SN65MLVD128, 129
V_{CC}	Supply voltage range(2)			–0.5 V to 4 V
V_I	Input voltage range	D, EN		–0.5 V to 4 V
V_O	Output voltage range	A or B		–1.8 V to 4 V
	Electrostatic discharge	Human Body Model(3)	A, B	±9 kV
			All pins	±4 kV
		Charged-Device Model(4)	All pins	±1500 V
		Machine Model(5)	All pins	200 V
	Continuous power dissipation			See Dissipation Rating Table

(1) Stresses beyond those listed under *absolute maximum ratings* may cause permanent damage to the device. These are stress ratings only, and functional operation of the device at these or any other conditions beyond those indicated under *recommended operating conditions* is not implied. Exposure to absolute-maximum-rated conditions for extended periods may affect device reliability.
(2) All voltage values, except differential I/O bus voltages, are with respect to network ground terminal.
(3) Tested in accordance with JEDEC Standard 22, Test Method A114-B.
(4) Tested in accordance with JEDEC Standard 22, Test Method C101-A.
(5) Tested in accordance with JEDEC Standard 22, Test Method A115-A.

RECOMMENDED OPERATING CONDITIONS

		MIN	NOM	MAX	UNIT
V_{CC}	Supply voltage	3	3.3	3.6	V
V_{IH}	High-level input voltage (1)	2		V_{CC}	V
V_{IL}	Low-level input voltage (2)	0		0.8	V
	Voltage at any bus terminal (separate or common mode) V_A or V_B	–1.4		3.8	V
R_L	Differential load resistance	30		55	Ω
$1/t_{UI}$	Signaling rate			250	Mbps
	Clock frequency			125	MHz
T_A	Ambient temperature	–40		85	°C

(1) In accordance with the High-K thermal metric difinitions of EIA/JESD51-7.
(2) In accordance with the Low-K thermal metric difinitions of EIA/JESD51-3.

DEVICE ELECTRICAL CHARACTERISTICS

over recommended operating conditions unless otherwise noted

PARAMETER			TEST CONDITIONS	MIN (1)	TYP (2)	MAX	UNIT
I_{CC}	Supply current	Driver enabled	EN = V_{CC}, Input = V_{CC} or GND, R_L = 50 Ω		112	140	mA
			EN = V_{CC}, Input = V_{CC} or GND, R_L = No load			45	mA
		Driver disabled	EN = V_{CC}, Input = V_{CC} or GND, R_L = 50 Ω			7	mA
			EN = V_{CC}, Input = V_{CC} or GND, R_L = No load			7	mA
P_D	Device power dissipation		V_{CC} = 3.6 V, EN = V_{CC}, C_L = 15 pF, R_L = 50 Ω, Input 125 MHz 50 % duty cycle square wave, T_A = 85°C			529	mW

(1) The algebraic convention, in which the least positive (most negative) limit is designated as minimum is used in this data sheet.
(2) All typical values are at 25°C and with a 3.3-V supply voltage.

DEVICE ELECTRICAL CHARACTERISTICS

over recommended operating conditions unless otherwise noted

PARAMETER		TEST CONDITIONS	MIN(1)	TYP(2)	MAX	UNIT
LVTTL (D, EN) INPUT SPECIFICATIONS						
$\|I_{IH}\|$	High-level input current	V_{IH} = 2 V or V_{CC}			10	µA
$\|I_{IL}\|$	Low-level input current	V_{IL} = GND or 0.8 V			10	µA
C_i	Input capacitance	V_I = 0.4 sin(30E6πt) + 0.5 V(3)		5		pF
M-LVDS (A, B) OUTPUT SPECIFICATIONS						
$\|V_{AB}\|$	Differential output voltage magnitude	See Figure 2	480		650	mV
$\Delta\|V_{AB}\|$	Change in differential output voltage magnitude between logic states	See Figure 2	–50		50	mV
$V_{OS(SS)}$	Steady-state common-mode output voltage	See Figure 3	0.8		1.2	V
$\Delta V_{OS(SS)}$	Change in steady-state common-mode output voltage between logic states	See Figure 3	-50		50	mV
$V_{OS(PP)}$	Peak-to-peak common-mode output voltage	See Figure 3			150	mV
$V_{A(OC)}$	Maximum steady-state open-circuit output voltage	See Figure 7	0		2.4	V
$V_{B(OC)}$	Maximum steady-state open-circuit output voltage	See Figure 7	0		2.4	V
$V_{P(H)}$	Voltage overshoot, low-to-high level output	See Figure 5			1.2 V_{SS}	V
$V_{P(L)}$	Voltage overshoot, high-to-low level output	See Figure 5	–0.2 V_{SS}			V
$\|I_{OS}\|$	Differential short-circuit output current magnitude	See Figure 4			24	mA
I_{OZ}	High-impedance state output current	–1.4 V ≤ (V_A or V_B) ≤ 3.8 V, Other output = 1.2 V	–20		20	µA
$I_{O(OFF)}$	Power-off output current	–1.4 V ≤ (V_A or V_B) ≤ 3.8 V, Other output = 1.2 V, 0 ≤ V_{CC}≤ 1.5 V	–20		20	µA
C_A orC_B	Output capacitance	V_I = 0.4 sin(30E6πt) + 0.5 V, (3) Other input at 1.2 V, driver disabled		3		pF
C_{AB}	Differential output capacitance	V_I = 0.4 sin(30E6πt) V, (3) Driver disabled			2.5	pF
$C_{A/B}$	Output capacitance balance, (C_A/C_B)		0.99		1.01	

(1) The algebraic convention, in which the least positive (most negative) limit is designated as minimum is used in this data sheet.
(2) All typical values are at 25°C and with a 3.3-V supply voltage.
(3) HP4194A impedance analyzer (or equivalent)

SWITCHING CHARACTERISTICS

over recommended operating conditions unless otherwise noted

PARAMETER		TEST CONDITIONS	MIN	TYP(1)	MAX	UNIT
t_{PLH}	Propagation delay time, low-to-high-level output	See Figure 5	1		3	ns
t_{PHL}	Propagation delay time, high-to-low-level output		1		3	ns
t_r	Differential output signal rise time		1		2	ns
t_f	Differential output signal fall time		1		2	ns
$t_{sk(p)}$	Pulse skew ($\lvert t_{pHL} - t_{pLH} \rvert$)				100	ps
$t_{sk(o)}$	Output skew				160	ps
$t_{sk(bb)}$	Bank-to-bank skew(2)				100	ps
$t_{sk(pp)}$	Part-to-part skew(3)				800	ps
$t_{jit(per)}$	Period jitter, rms (1 standard deviation)(4)	100 MHz clock input, All channels enabled		1	3	ps
$t_{jit(c\text{-}c)}$	Cycle-to-cycle jitter(4)	100 MHz clock input, All channels enabled			20	ps
$t_{jit(pp)}$	Peak-to-peak jitter(4)	200 Mbps 2^{15}-1 PRBS input, All channels enabled		46	110	ps
t_{PZH}	Enable time, high-impedance-to-high-level output	See Figure 6			7	ns
t_{PZL}	Enable time, high-impedance-to-low-level output				7	ns
t_{PHZ}	Disable time, high-level-to-high-impedance output	See Figure 6			7	ns
t_{PLZ}	Disable time, low-level-to-high-impedance output				7	ns

(1) All typical values are at 25°C and with a 3.3-V supply voltage.
(2) $t_{sk(bb)}$, which only applies to the SN65MLVD129, is the magnitude of the difference between the t_{PLH} and t_{PHL} of two outputs of any bank.
(3) $t_{sk(pp)}$ is the magnitude of the difference in propagation delay times between any specified terminals of two devices when both devices operate with the same supply voltages, at the same temperature, and have identical packages and test circuits.
(4) Stimulus jitter has been subtracted from the numbers.

PARAMETER MEASUREMENT INFORMATION

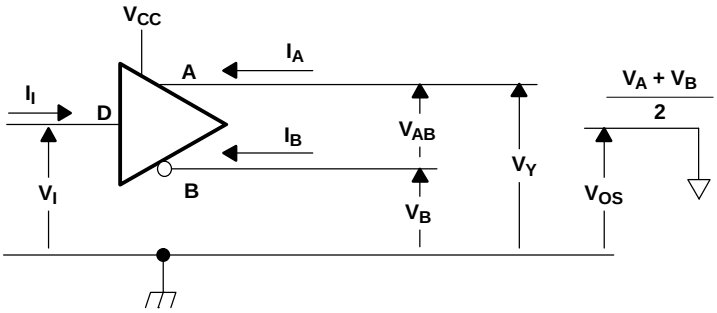

Figure 1. Driver Voltage and Current Definitions

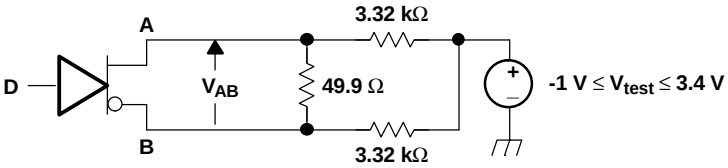

NOTE: All resistors are 1% tolerance.

Figure 2. Differential Output Voltage Test Circuit

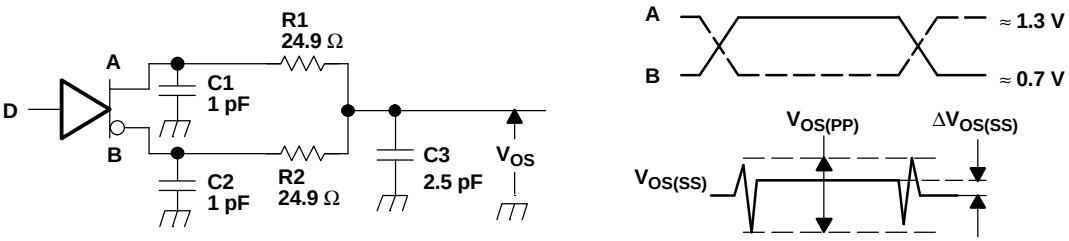

A. All input pulses are supplied by a generator having the following characteristics: t_r or $t_f \leq$ 1 ns, frequency = 1 MHz, duty cycle = 50 ± 5%.

B. C1, C2 and C3 include instrumentation and fixture capacitance within 2 cm of the D.U.T. and are ±20%.

C. R1 and R2 are metal film, surface mount, ±1%, and located within 2 cm of the D.U.T.

D. The measurement of $V_{OS(PP)}$ is made on test equipment with a -3 dB bandwidth of at least 1 GHz.

Figure 3. Test Circuit and Definitions for the Driver Common-Mode Output Voltage

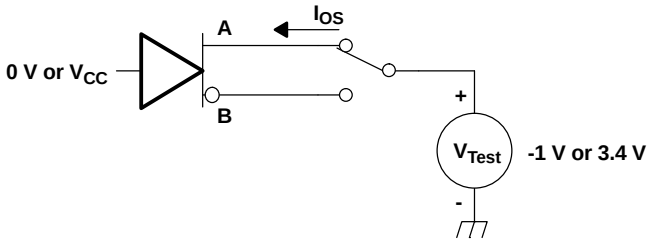

Figure 4. Driver Short-Circuit Test Circuit

PARAMETER MEASUREMENT INFORMATION (continued)

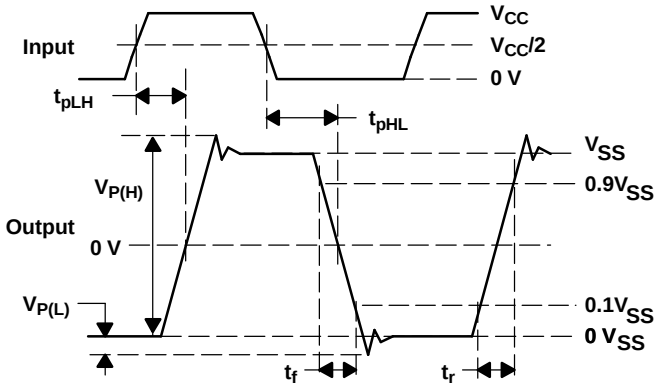

NOTE: All input pulses are supplied by a generator having the following characteristics: t_r or $t_f \leq$ 1 ns, frequency = 1 MHz, duty cycle = 50 ± 5%.

Figure 5. Driver Test Circuit, Timing, and Voltage Definitions for the Differential Output Signal

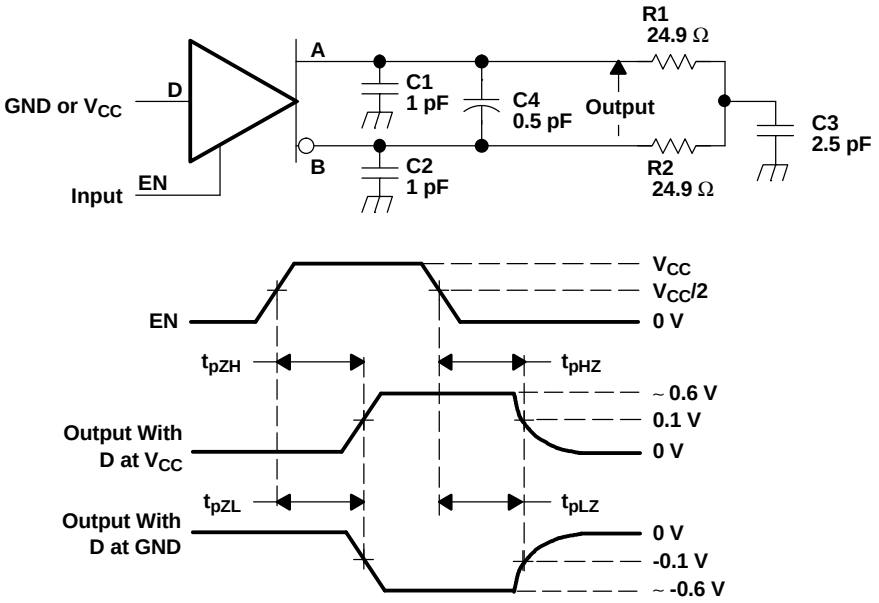

A. All input pulses are supplied by a generator having the following characteristics: t_r or $t_f \leq$ 1 ns, frequency = 1 MHz, duty cycle = 50 ± 5%.

B. C1, C2, C3, and C4 include instrumentation and fixture capacitance within 2 cm of the D.U.T. and are ±20%.

C. R1 and R2 are metal film, surface mount, ±1%, and located within 2 cm of the D.U.T.

Figure 6. Driver Enable and Disable Time Circuit and Definitions

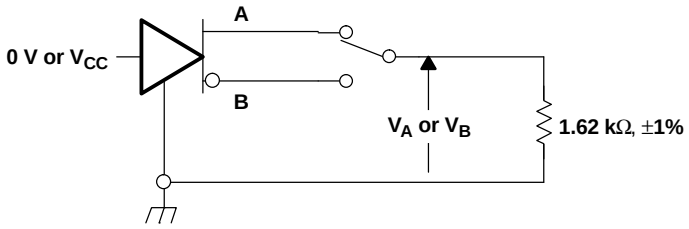

Figure 7. Driver Maximum Steady State Output Voltage

PARAMETER MEASUREMENT INFORMATION (continued)

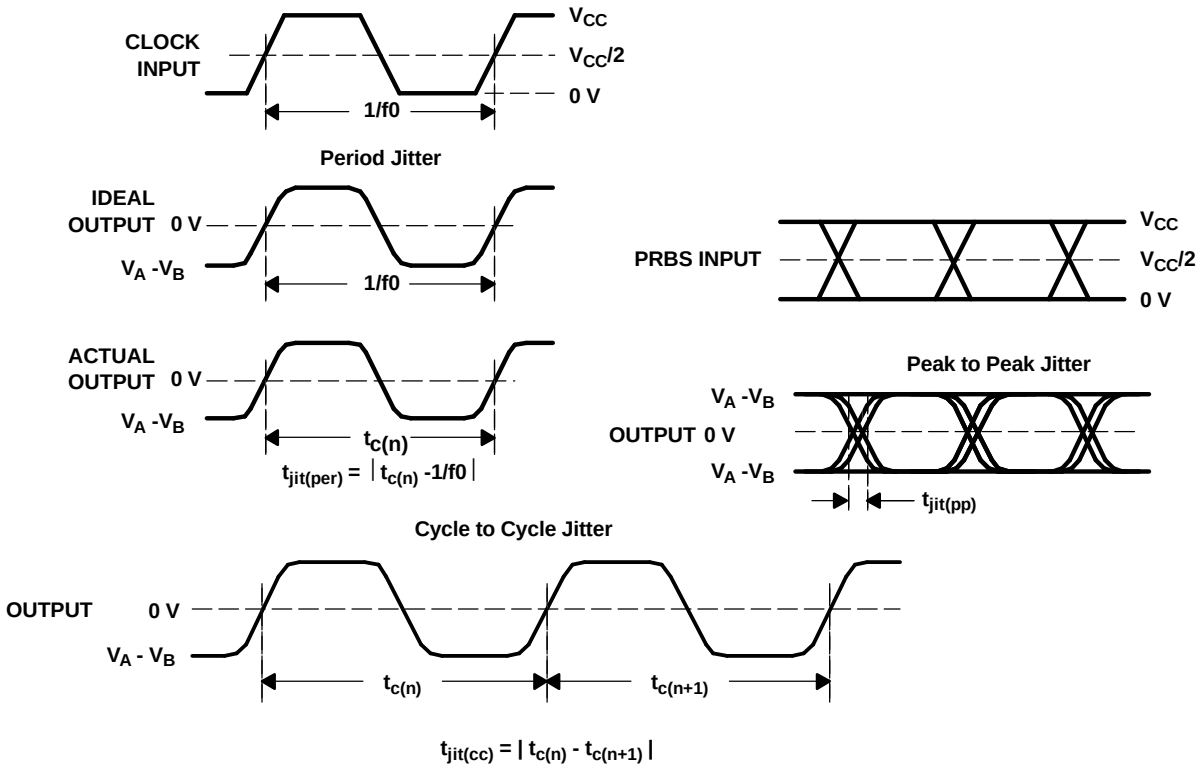

A. All input pulses are supplied by an Agilent 8304A Stimulus System.

B. The measurement is made on a TEK TDS6604 running TDSJIT3 application software

C. Period jitter and cycle-to-cycle jitter are measured using a 100 MHz 50 ±1% duty cycle clock input.

D. Peak-to-peak jitter is measured using a 200 Mbps 2^{15}-1 PRBS input.

Figure 8. Driver Jitter Measurement Waveforms

Table 1. Terminal Functions

PIN		TYPE	DESCRIPTION
NAME	NO.		
SN65MLVD128			
1D	39	Input	Data inputs for drivers
EN1–EN8	27, 28, 32, 33, 40, 41, 45, 46	Input	Driver enable, active high, individual enables
1A–8A	2, 4, 8, 10, 14, 16, 20, 22	Output	M-LVDS bus noninverting output
1B–8B	3, 5, 9, 11, 15, 17, 21, 23	Output	M-LVDS bus inverting output
GND	6, 12, 18, 24, 25, 26, 31, 37, 38, 43, 44	Power	Circuit ground
V_{CC}	1, 7, 13, 19, 29, 30, 35, 36, 47, 48	Power	Supply voltage
NC	34, 42	N/A	Not connected
SN65MLVD129			
1D, 2D	39, 34	Input	Data inputs for drivers
EN1–EN8	27, 28, 32, 33,40, 41, 45, 46	Input	Driver enable, active high, individual enables
1A–8A	2, 4, 8, 10,14, 16, 20, 22	Output	M-LVDS bus noninverting output
1B–8B	3, 5, 9, 11,15, 17, 21, 23	Output	M-LVDS bus inverting output
GND	6, 12, 18, 24, 25, 26, 31, 37, 38, 43, 44	Power	Circuit ground
V_{CC}	1, 7, 13, 19, 29, 30, 35, 36, 47, 48	Power	Supply voltage
NC	42	N/A	Not connected

PIN ASSIGNMENTS

MLVD128DGG
48-TSSOP PACKAGE
(TOP VIEW)

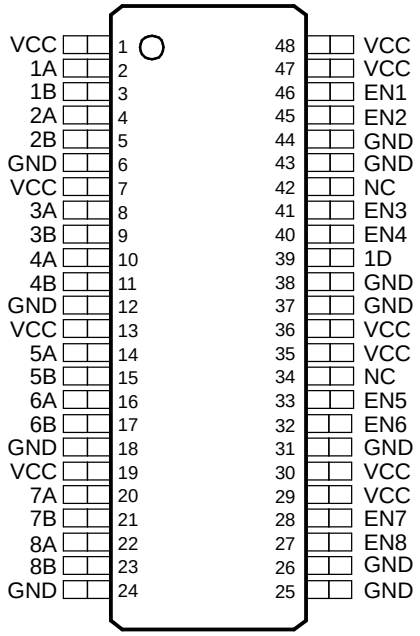

MLVD129DGG
48-TSSOP PACKAGE
(TOP VIEW)

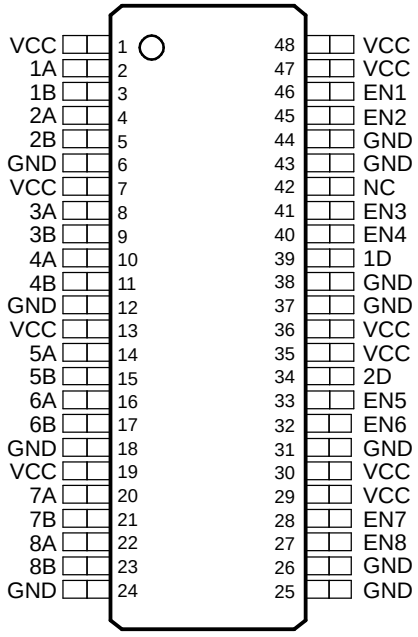

NC - No internal connection

FUNCTION TABLE

MLVD128 / MLVD129 (1)			
INPUT	ENABLE	OUTPUTS	
D	EN	A	B
L	H	L	H
H	H	H	L
OPEN	H	L	H
X	OPEN	Z	Z
X	L	Z	Z

(1) H = high level, L = low level, Z = high impedance, X = Don't care, OPEN = indeterminate

EQUIVALENT INPUT AND OUTPUT SCHEMATIC DIAGRAMS

DRIVER INPUT AND DRIVER ENABLE

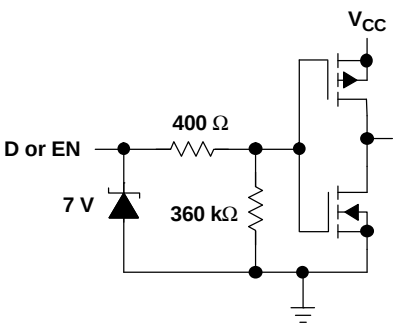

DRIVER OUTPUT

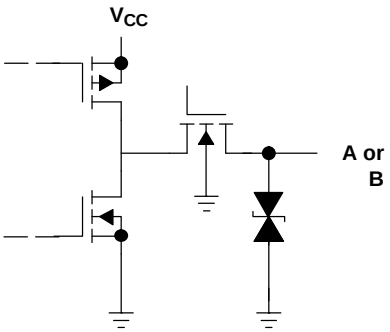

TYPICAL CHARACTERISTICS

RMS SUPPLY CURRENT vs INPUT FREQUENCY

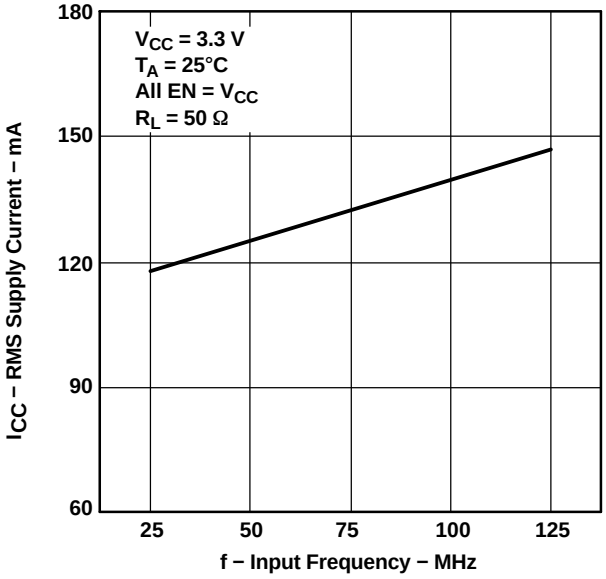

Figure 9.

RMS SUPPLY CURRENT vs FREE-AIR TEMPERATURE

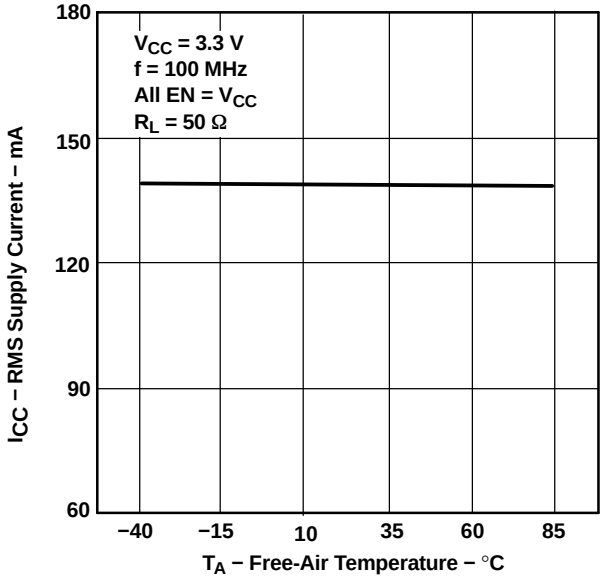

Figure 10.

TYPICAL CHARACTERISTICS (continued)

DIFFERENTIAL OUTPUT VOLTAGE MAGNITUDE vs INPUT FREQUENCY

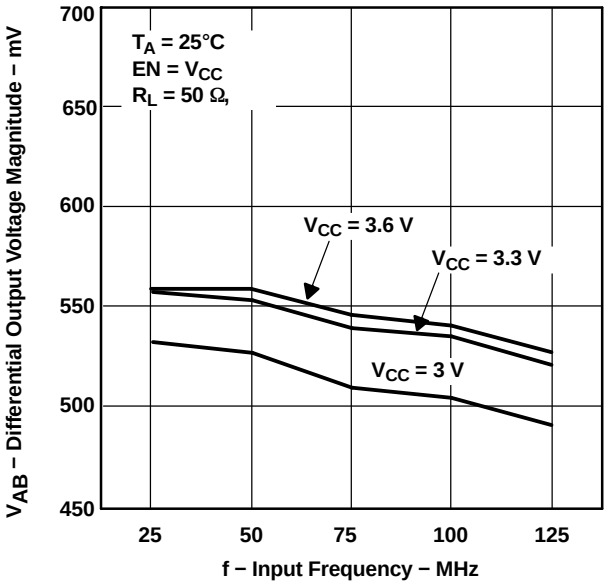

Figure 11.

PROPAGATION DELAY TIME vs FREE-AIR TEMPERATURE

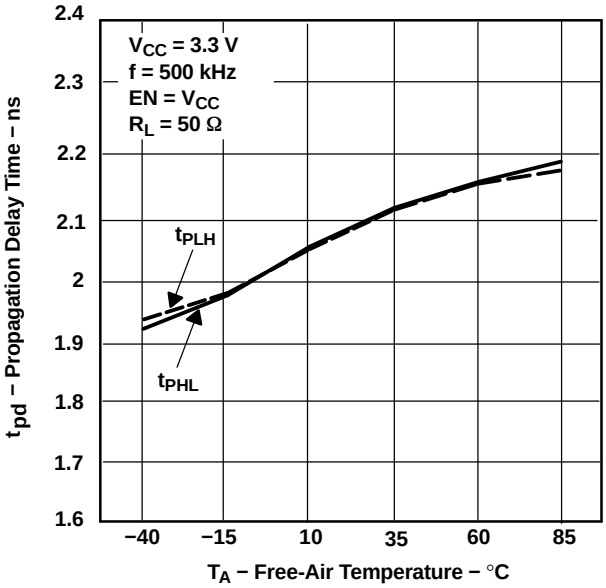

Figure 12.

TRANSITION TIME vs FREE-AIR TEMPERATURE

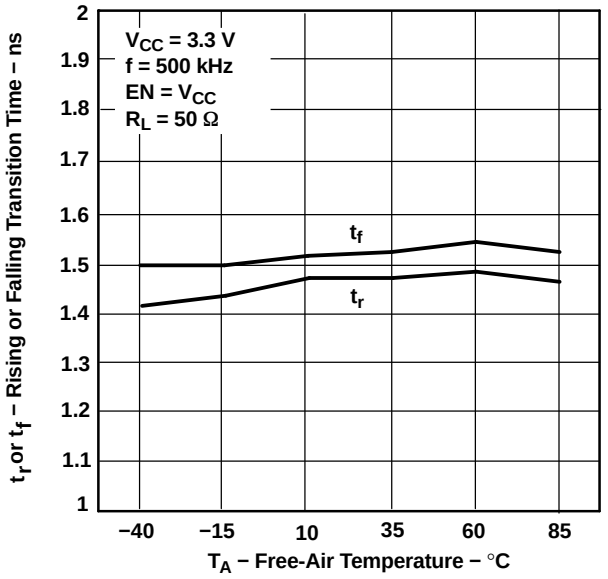

Figure 13.

PEAK-TO-PEAK JITTER vs DATA RATE

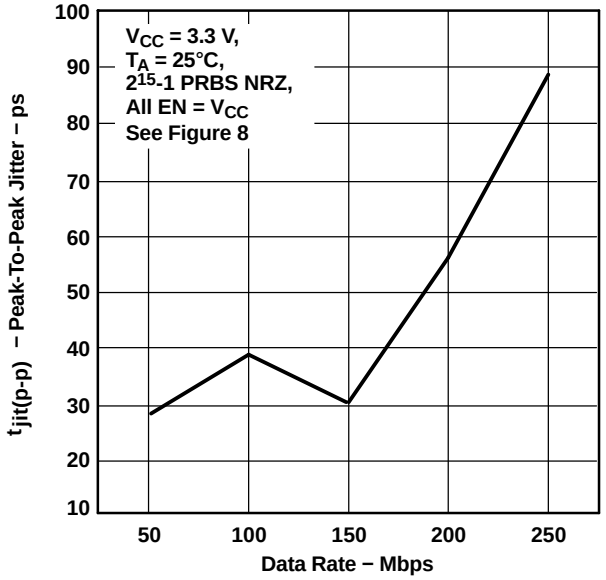

Figure 14.

TYPICAL CHARACTERISTICS (continued)

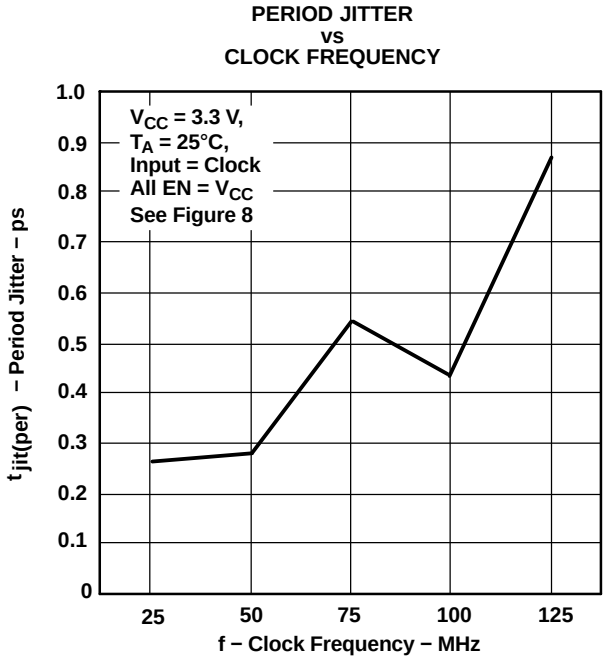

Figure 15.

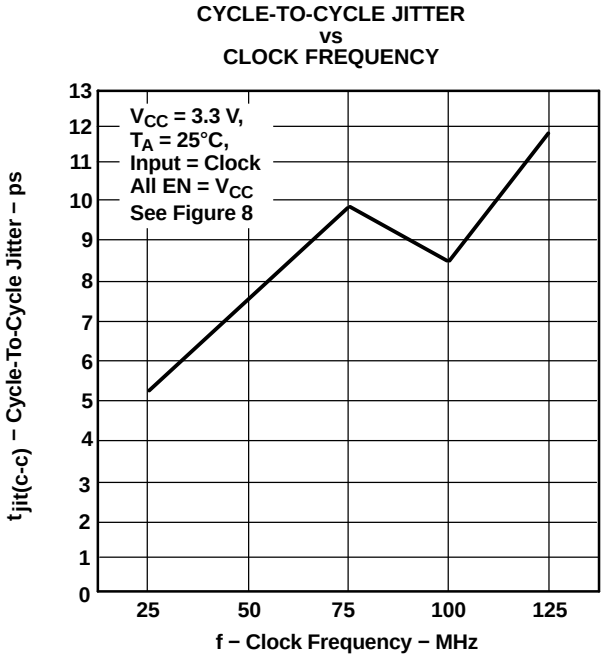

Figure 16.

APPLICATION INFORMATION

CLOCK DISTRIBUTION

SN65MLVD128 Output
Input Source: 19.6608 MHz Clock With 50% Duty Cycle, V_{CC} = 3.3 V, R_L = 50 Ω, C_L = 2.5 pF

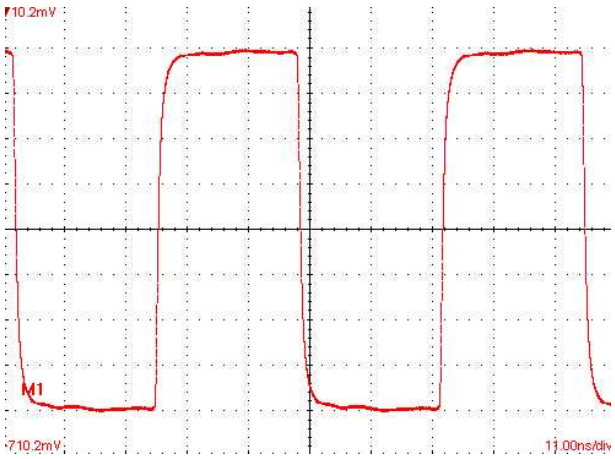

Output Duty cycle = 49.97%.
Vertical scale = 142 mV/div
Horizontal scale = 11 ns/div

Figure 17.

SN65MLVD128 Output
Input Source: 61.44 MHz Clock With 50% Duty Cycle, V_{CC} = 3.3 V, R_L = 50 Ω, C_L = 2.5 pF

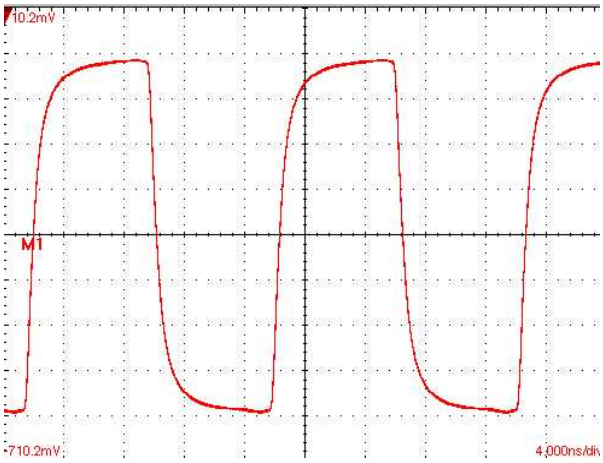

Output duty cycle = 50.01%.
Vertical scale = 142 mV/div
Horizontal scale = 4 ns/div

Figure 18.

DATA DISTRIBUTION

SN65MLVD128 Output
Input Source: 250 Mbps, 2^{15}-1 PRBS, V_{CC} = 3.3 V, R_L = 50 Ω, C_L = 2.5 pF

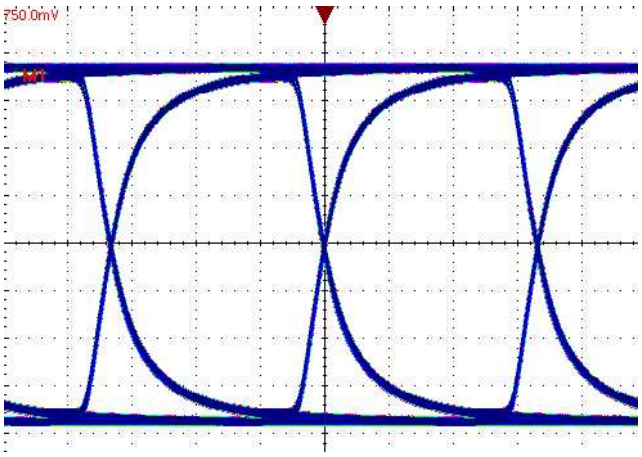

Vertical scale = 150 mV/div
Horizontal scale = 1.21 ns/div

Figure 19.

PACKAGING INFORMATION

Orderable Device	Status (1)	Package Type	Package Drawing	Pins	Package Qty	Eco Plan (2)	Lead finish/ Ball material (6)	MSL Peak Temp (3)	Op Temp (°C)	Device Marking (4/5)	Samples
SN65MLVD128DGG	ACTIVE	TSSOP	DGG	48	40	RoHS & Green	NIPDAU	Level-2-260C-1 YEAR	-40 to 85	MLVD128	Samples
SN65MLVD128DGGR	ACTIVE	TSSOP	DGG	48	2000	RoHS & Green	NIPDAU	Level-2-260C-1 YEAR	-40 to 85	MLVD128	Samples
SN65MLVD129DGG	ACTIVE	TSSOP	DGG	48	40	RoHS & Green	NIPDAU	Level-2-260C-1 YEAR	-40 to 85	MLVD129	Samples
SN65MLVD129DGGR	ACTIVE	TSSOP	DGG	48	2000	RoHS & Green	NIPDAU	Level-2-260C-1 YEAR	-40 to 85	MLVD129	Samples

(1) The marketing status values are defined as follows:
ACTIVE: Product device recommended for new designs.
LIFEBUY: TI has announced that the device will be discontinued, and a lifetime-buy period is in effect.
NRND: Not recommended for new designs. Device is in production to support existing customers, but TI does not recommend using this part in a new design.
PREVIEW: Device has been announced but is not in production. Samples may or may not be available.
OBSOLETE: TI has discontinued the production of the device.

(2) **RoHS:** TI defines "RoHS" to mean semiconductor products that are compliant with the current EU RoHS requirements for all 10 RoHS substances, including the requirement that RoHS substance do not exceed 0.1% by weight in homogeneous materials. Where designed to be soldered at high temperatures, "RoHS" products are suitable for use in specified lead-free processes. TI may reference these types of products as "Pb-Free".
RoHS Exempt: TI defines "RoHS Exempt" to mean products that contain lead but are compliant with EU RoHS pursuant to a specific EU RoHS exemption.
Green: TI defines "Green" to mean the content of Chlorine (Cl) and Bromine (Br) based flame retardants meet JS709B low halogen requirements of <=1000ppm threshold. Antimony trioxide based flame retardants must also meet the <=1000ppm threshold requirement.

(3) MSL, Peak Temp. - The Moisture Sensitivity Level rating according to the JEDEC industry standard classifications, and peak solder temperature.

(4) There may be additional marking, which relates to the logo, the lot trace code information, or the environmental category on the device.

(5) Multiple Device Markings will be inside parentheses. Only one Device Marking contained in parentheses and separated by a "~" will appear on a device. If a line is indented then it is a continuation of the previous line and the two combined represent the entire Device Marking for that device.

(6) Lead finish/Ball material - Orderable Devices may have multiple material finish options. Finish options are separated by a vertical ruled line. Lead finish/Ball material values may wrap to two lines if the finish value exceeds the maximum column width.

Important Information and Disclaimer: The information provided on this page represents TI's knowledge and belief as of the date that it is provided. TI bases its knowledge and belief on information provided by third parties, and makes no representation or warranty as to the accuracy of such information. Efforts are underway to better integrate information from third parties. TI has taken and

continues to take reasonable steps to provide representative and accurate information but may not have conducted destructive testing or chemical analysis on incoming materials and chemicals.
TI and TI suppliers consider certain information to be proprietary, and thus CAS numbers and other limited information may not be available for release.

In no event shall TI's liability arising out of such information exceed the total purchase price of the TI part(s) at issue in this document sold by TI to Customer on an annual basis.

TAPE AND REEL INFORMATION

REEL DIMENSIONS

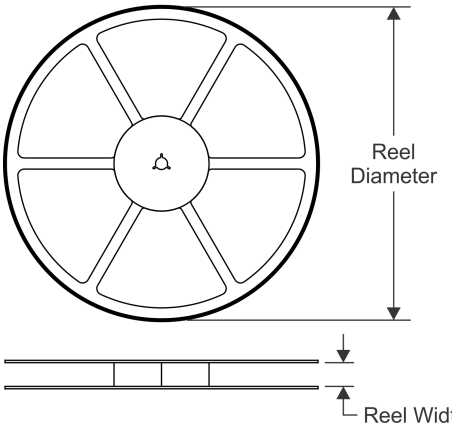

TAPE DIMENSIONS

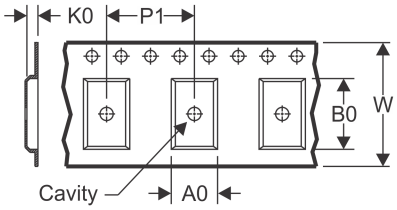

A0	Dimension designed to accommodate the component width
B0	Dimension designed to accommodate the component length
K0	Dimension designed to accommodate the component thickness
W	Overall width of the carrier tape
P1	Pitch between successive cavity centers

QUADRANT ASSIGNMENTS FOR PIN 1 ORIENTATION IN TAPE

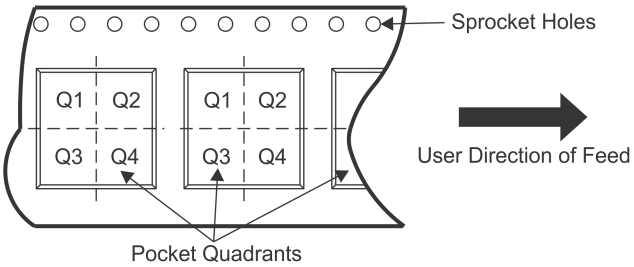

*All dimensions are nominal

Device	Package Type	Package Drawing	Pins	SPQ	Reel Diameter (mm)	Reel Width W1 (mm)	A0 (mm)	B0 (mm)	K0 (mm)	P1 (mm)	W (mm)	Pin1 Quadrant
SN65MLVD128DGGR	TSSOP	DGG	48	2000	330.0	24.4	8.6	13.0	1.8	12.0	24.0	Q1
SN65MLVD129DGGR	TSSOP	DGG	48	2000	330.0	24.4	8.6	13.0	1.8	12.0	24.0	Q1

TAPE AND REEL BOX DIMENSIONS

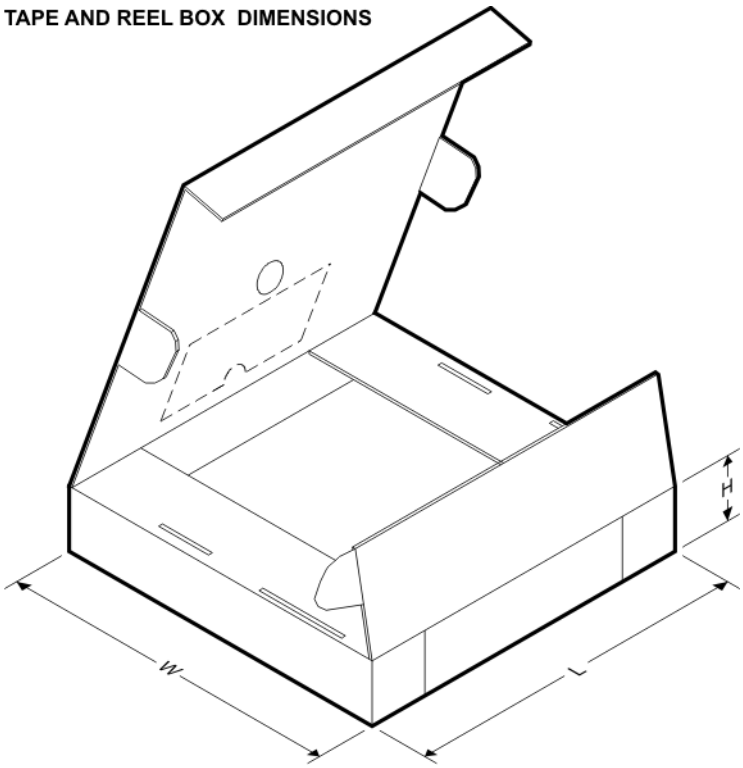

*All dimensions are nominal

Device	Package Type	Package Drawing	Pins	SPQ	Length (mm)	Width (mm)	Height (mm)
SN65MLVD128DGGR	TSSOP	DGG	48	2000	350.0	350.0	43.0
SN65MLVD129DGGR	TSSOP	DGG	48	2000	350.0	350.0	43.0

TUBE

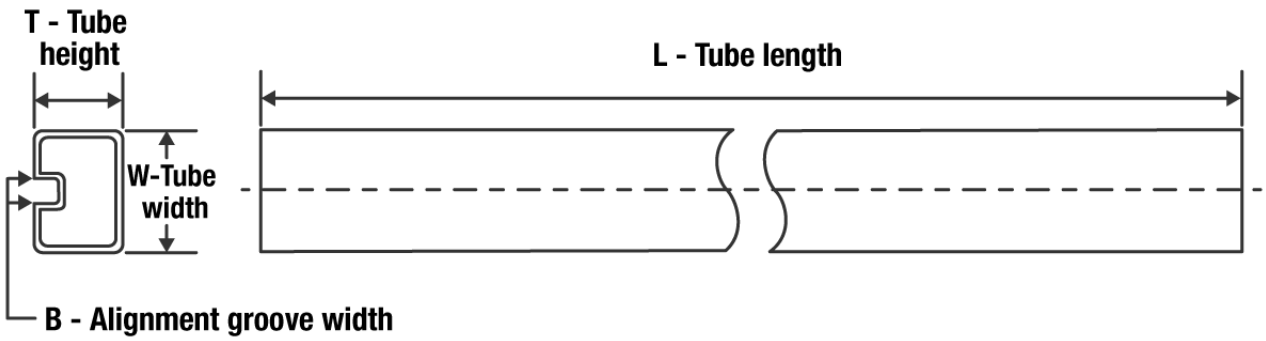

*All dimensions are nominal

Device	Package Name	Package Type	Pins	SPQ	L (mm)	W (mm)	T (µm)	B (mm)
SN65MLVD128DGG	DGG	TSSOP	48	40	530	11.89	3600	4.9
SN65MLVD129DGG	DGG	TSSOP	48	40	530	11.89	3600	4.9

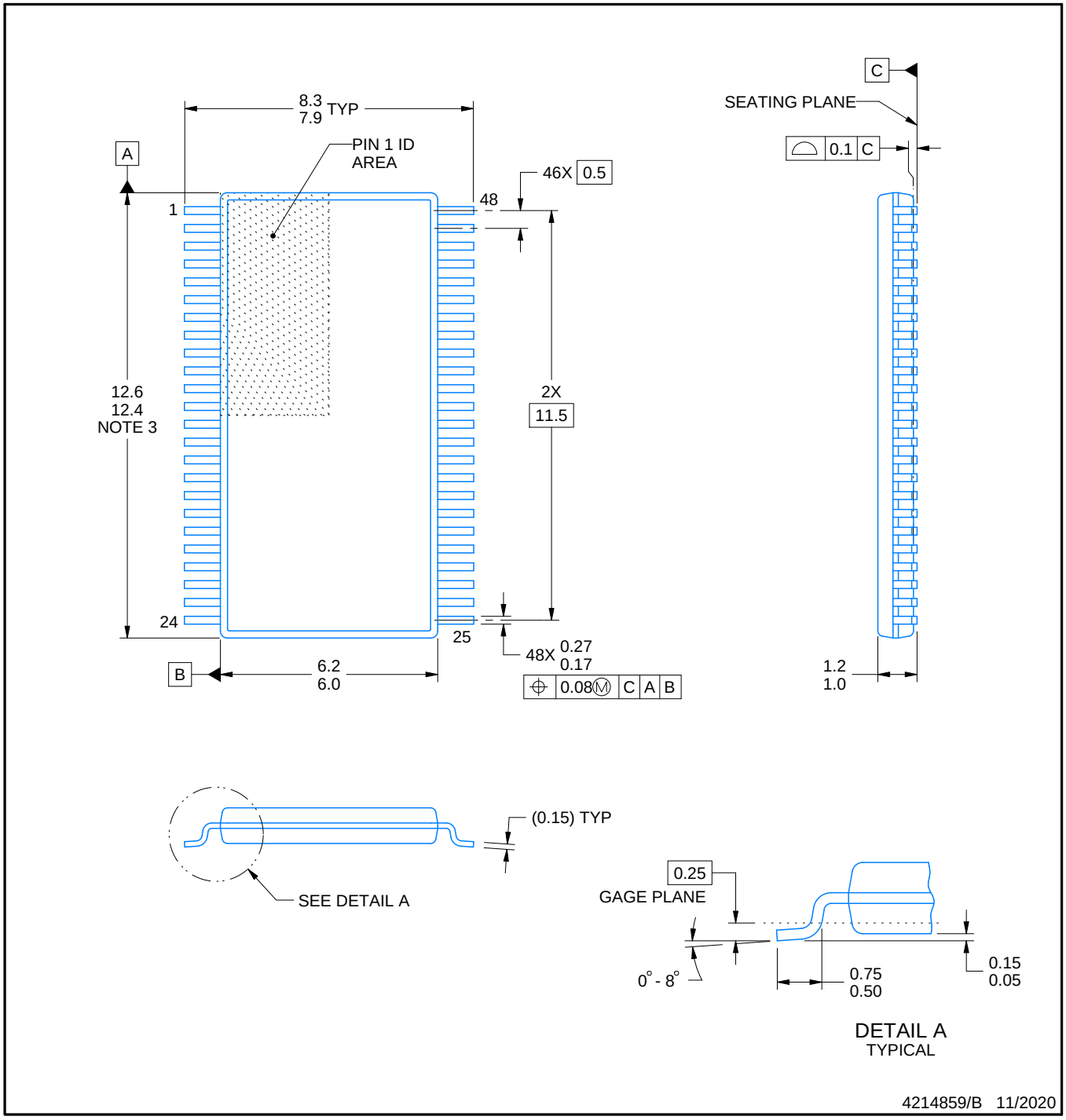

NOTES:

1. All linear dimensions are in millimeters. Any dimensions in parenthesis are for reference only. Dimensioning and tolerancing per ASME Y14.5M.
2. This drawing is subject to change without notice.
3. This dimension does not include mold flash, protrusions, or gate burrs. Mold flash, protrusions, or gate burrs shall not exceed 0.15 mm per side.
4. Reference JEDEC registration MO-153.

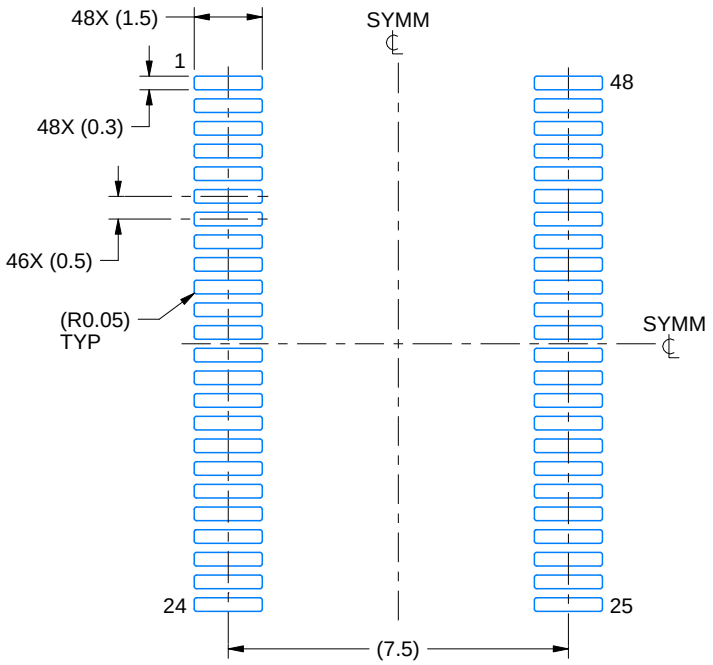

LAND PATTERN EXAMPLE
SCALE:6X

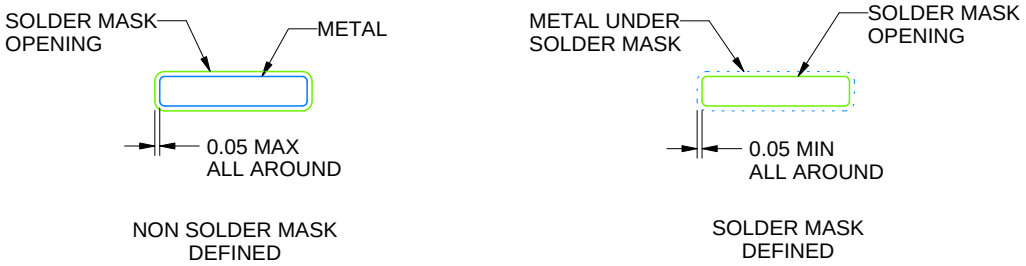

SOLDER MASK DETAILS

4214859/B 11/2020

NOTES: (continued)

5. Publication IPC-7351 may have alternate designs.
6. Solder mask tolerances between and around signal pads can vary based on board fabrication site.

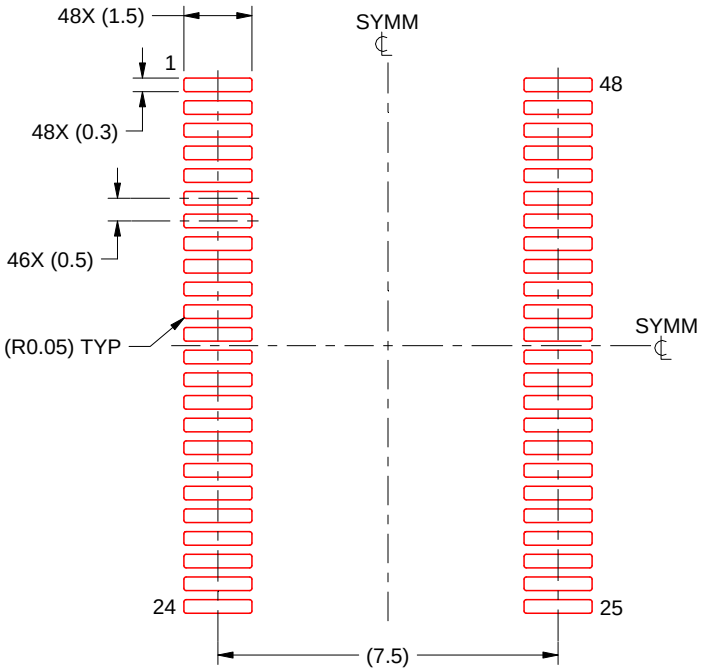

SOLDER PASTE EXAMPLE
BASED ON 0.125 mm THICK STENCIL
SCALE:6X

4214859/B 11/2020

NOTES: (continued)

7. Laser cutting apertures with trapezoidal walls and rounded corners may offer better paste release. IPC-7525 may have alternate design recommendations.
8. Board assembly site may have different recommendations for stencil design.

DGG (R-PDSO-G)** **PLASTIC SMALL-OUTLINE PACKAGE**

48 PINS SHOWN

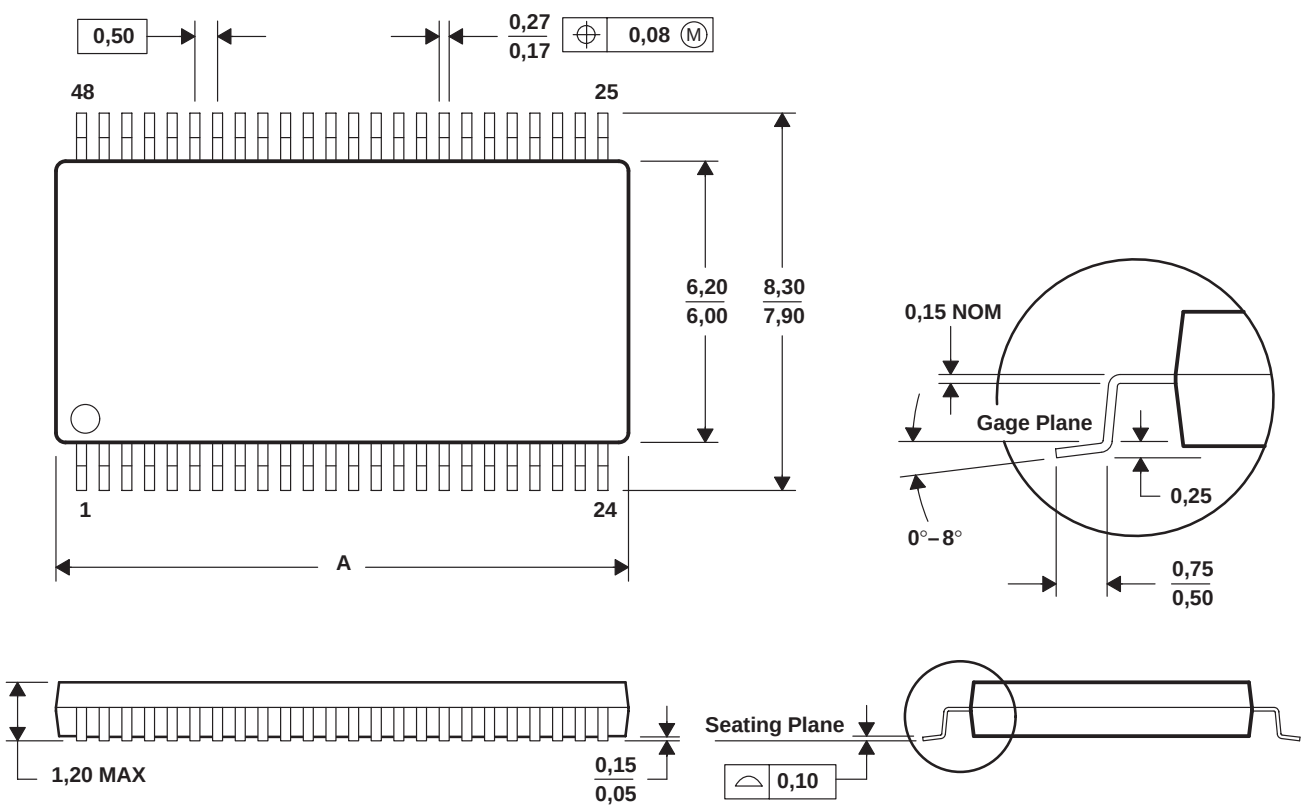

DIM \ PINS **	48	56	64
A MAX	12,60	14,10	17,10
A MIN	12,40	13,90	16,90

4040078/F 12/97

NOTES: A. All linear dimensions are in millimeters.
B. This drawing is subject to change without notice.
C. Body dimensions do not include mold protrusion not to exceed 0,15.
D. Falls within JEDEC MO-153

IMPORTANT NOTICE AND DISCLAIMER

TI PROVIDES TECHNICAL AND RELIABILITY DATA (INCLUDING DATA SHEETS), DESIGN RESOURCES (INCLUDING REFERENCE DESIGNS), APPLICATION OR OTHER DESIGN ADVICE, WEB TOOLS, SAFETY INFORMATION, AND OTHER RESOURCES “AS IS” AND WITH ALL FAULTS, AND DISCLAIMS ALL WARRANTIES, EXPRESS AND IMPLIED, INCLUDING WITHOUT LIMITATION ANY IMPLIED WARRANTIES OF MERCHANTABILITY, FITNESS FOR A PARTICULAR PURPOSE OR NON-INFRINGEMENT OF THIRD PARTY INTELLECTUAL PROPERTY RIGHTS.

These resources are intended for skilled developers designing with TI products. You are solely responsible for (1) selecting the appropriate TI products for your application, (2) designing, validating and testing your application, and (3) ensuring your application meets applicable standards, and any other safety, security, regulatory or other requirements.

These resources are subject to change without notice. TI grants you permission to use these resources only for development of an application that uses the TI products described in the resource. Other reproduction and display of these resources is prohibited. No license is granted to any other TI intellectual property right or to any third party intellectual property right. TI disclaims responsibility for, and you will fully indemnify TI and its representatives against, any claims, damages, costs, losses, and liabilities arising out of your use of these resources.

TI’s products are provided subject to TI’s Terms of Sale or other applicable terms available either on ti.com or provided in conjunction with such TI products. TI’s provision of these resources does not expand or otherwise alter TI’s applicable warranties or warranty disclaimers for TI products.

TI objects to and rejects any additional or different terms you may have proposed.

Mailing Address: Texas Instruments, Post Office Box 655303, Dallas, Texas 75265
Copyright © 2022, Texas Instruments Incorporated