- **3-State Buffer-Type Outputs Drive Bus Lines Directly**
- **Bus-Structured Pinout**
- **True Logic Outputs**
- **Package Options Include Plastic Small-Outline (DW) Packages, Ceramic Chip Carriers (FK), Standard Plastic (N) and Ceramic (J) 300-mil DIPs, and Ceramic Flat (W) Packages**

SN54ALS573C, SN54AS573A . . . J OR W PACKAGE
SN74ALS573C, SN74AS573A . . . DW OR N PACKAGE
(TOP VIEW)

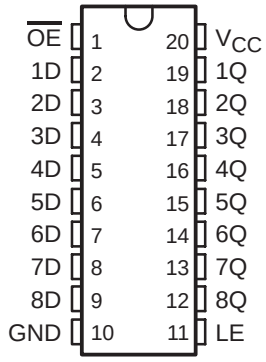

SN54ALS573C, SN54AS573A . . . FK PACKAGE
(TOP VIEW)

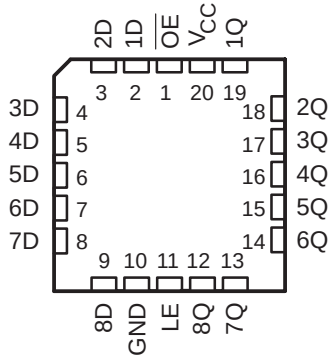

description

These octal D-type transparent latches feature 3-state outputs designed specifically for driving highly capacitive or relatively low-impedance loads. They are particularly suitable for implementing buffer registers, I/O ports, bidirectional bus drivers, and working registers.

While the latch-enable (LE) input is high, outputs (Q) respond to the data (D) inputs. When LE is low, the outputs are latched to retain the data that was set up.

A buffered output-enable ($\overline{OE}$) input can be used to place the eight outputs in either a normal logic state (high or low) or a high-impedance state. In the high-impedance state, the outputs neither load nor drive the bus lines significantly. The high-impedance state and the increased drive provide the capability to drive bus lines without interface or pullup components.

$\overline{OE}$ does not affect internal operation of the latches. Old data can be retained or new data can be entered while the outputs are in the high-impedance state.

The SN54ALS573C and SN54AS573A are characterized for operation over the full military temperature range of −55°C to 125°C. The SN74ALS573C and SN74AS573A are characterized for operation from 0°C to 70°C.

FUNCTION TABLE
(each latch)

INPUTS			OUTPUT
$\overline{OE}$	LE	D	Q
L	H	H	H
L	H	L	L
L	L	X	Q_0
H	X	X	Z

PRODUCTION DATA information is current as of publication date. Products conform to specifications per the terms of Texas Instruments standard warranty. Production processing does not necessarily include testing of all parameters.

Copyright © 1995, Texas Instruments Incorporated

TEXAS INSTRUMENTS
POST OFFICE BOX 655303 • DALLAS, TEXAS 75265
POST OFFICE BOX 1443 • HOUSTON, TEXAS 77251−1443

logic symbol†

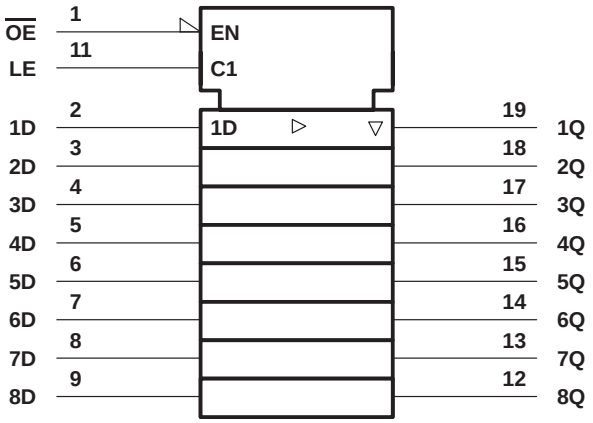

† This symbol is in accordance with ANSI/IEEE Std 91-1984 and IEC Publication 617-12.

logic diagram (positive logic)

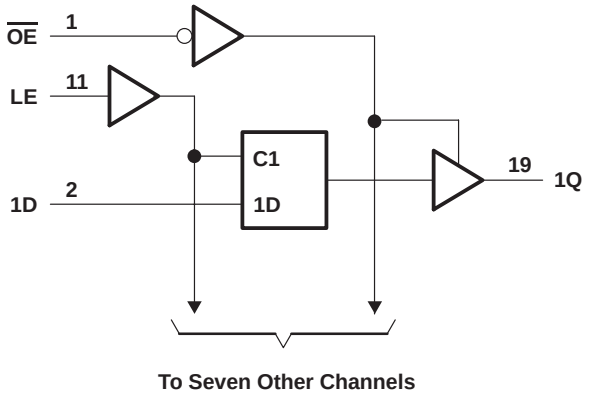

absolute maximum ratings over operating free-air temperature range (unless otherwise noted)‡

Supply voltage, V_{CC} . . . . . 7 V
Input voltage, V_I . . . . . 7 V
Voltage applied to a disabled 3-state output . . . . . 5.5 V
Operating free-air temperature range, T_A: SN54ALS573C . . . . . −55°C to 125°C
SN74ALS573C . . . . . 0°C to 70°C
Storage temperature range . . . . . −65°C to 150°C

‡ Stresses beyond those listed under “absolute maximum ratings” may cause permanent damage to the device. These are stress ratings only, and functional operation of the device at these or any other conditions beyond those indicated under “recommended operating conditions” is not implied. Exposure to absolute-maximum-rated conditions for extended periods may affect device reliability.

recommended operating conditions

		SN54ALS573C			SN74ALS573C			UNIT
		MIN	NOM	MAX	MIN	NOM	MAX	
V_{CC}	Supply voltage	4.5	5	5.5	4.5	5	5.5	V
V_{IH}	High-level input voltage	2			2			V
V_{IL}	Low-level input voltage			0.7			0.8	V
I_{OH}	High-level output current			−1			−2.6	mA
I_{OL}	Low-level output current			12			24	mA
t_w	Pulse duration, LE high	25			10			ns
t_{su}	Setup time, data before LE↓	10			10			ns
t_h	Hold time, data after LE↓	7			7			ns
T_A	Operating free-air temperature	−55		125	0		70	°C

electrical characteristics over recommended operating free-air temperature range (unless otherwise noted)

PARAMETER	TEST CONDITIONS		SN54ALS573C			SN74ALS573C			UNIT
			MIN	TYP†	MAX	MIN	TYP†	MAX	
V_{IK}	V_{CC} = 4.5 V,	I_I = −18 mA			−1.2			−1.2	V
V_{OH}	V_{CC} = 4.5 V to 5.5 V,	I_{OH} = −0.4 mA	V_{CC} −2			V_{CC} −2			V
	V_{CC} = 4.5 V	I_{OH} = −1 mA	2.4	3.3					
		I_{OH} = −2.6 mA				2.4	3.2		
V_{OL}	V_{CC} = 4.5 V	I_{OL} = 12 mA		0.25	0.4		0.25	0.4	V
		I_{OL} = 24 mA					0.35	0.5	
I_{OZH}	V_{CC} = 5.5 V,	V_O = 2.7 V			20			20	µA
I_{OZL}	V_{CC} = 5.5 V,	V_O = 0.4 V			−20			−20	µA
I_I	V_{CC} = 5.5 V,	V_I = 7 V			0.1			0.1	mA
I_{IH}	V_{CC} = 5.5 V,	V_I = 2.7 V			20			20	µA
I_{IL}	V_{CC} = 5.5 V,	V_I = 0.4 V			−0.13			−0.1	mA
I_O‡	V_{CC} = 5.5 V,	V_O = 2.25 V	−20		−112	−30		−112	mA
I_{CC}	V_{CC} = 5.5 V	Outputs high		10	17		10	17	mA
		Outputs low		15	24		15	24	
		Outputs disabled		16	27		16	27	

† All typical values are at V_{CC} = 5 V, T_A = 25°C.
‡ The output conditions have been chosen to produce a current that closely approximates one half of the true short-circuit output current, I_{OS}.

switching characteristics (see Figure 1)

PARAMETER	FROM (INPUT)	TO (OUTPUT)	V_{CC} = 4.5 V to 5.5 V, C_L = 50 pF, R1 = 500 Ω, R2 = 500 Ω, T_A = MIN to MAX§				UNIT
			SN54ALS573C		SN74ALS573C		
			MIN	MAX	MIN	MAX	
t_{PLH}	D	Q	2	20	2	14	ns
t_{PHL}			2	17	2	14	
t_{PLH}	LE	Q	8	33	6	20	ns
t_{PHL}			8	24	6	19	
t_{PZH}	$\overline{OE}$	Q	4	28	3	18	ns
t_{PZL}			4	21	4	18	
t_{PHZ}	$\overline{OE}$	Q	2	20	1	10	ns
t_{PLZ}			3	26	1	15	

§ For conditions shown as MIN or MAX, use the appropriate value specified under recommended operating conditions.

absolute maximum ratings over operating free-air temperature range (unless otherwise noted)†

Supply voltage, V_{CC} . . . . . 7 V
Input voltage, V_I . . . . . 7 V
Voltage applied to a disabled 3-state output . . . . . 5.5 V
Operating free-air temperature range, T_A: SN54AS573A . . . . . −55°C to 125°C
SN74AS573A . . . . . 0°C to 70°C
Storage temperature range . . . . . −65°C to 150°C

† Stresses beyond those listed under “absolute maximum ratings” may cause permanent damage to the device. These are stress ratings only, and functional operation of the device at these or any other conditions beyond those indicated under “recommended operating conditions” is not implied. Exposure to absolute-maximum-rated conditions for extended periods may affect device reliability.

recommended operating conditions

		SN54AS573A			SN74AS573A			UNIT
		MIN	NOM	MAX	MIN	NOM	MAX	
V_{CC}	Supply voltage	4.5	5	5.5	4.5	5	5.5	V
V_{IH}	High-level input voltage	2			2			V
V_{IL}	Low-level input voltage			0.8			0.8	V
I_{OH}	High-level output current			−12			−15	mA
I_{OL}	Low-level output current			32			48	mA
t_w*	Pulse duration, LE high	5.5			4.5			ns
t_{su}*	Setup time, data before LE↓	2			2			ns
t_h*	Hold time, data after LE↓	3			3			ns
T_A	Operating free-air temperature	−55		125	0		70	°C

* On products compliant to MIL-STD-883, Class B, this parameter is based on characterization data but is not production tested.

electrical characteristics over recommended operating free-air temperature range (unless otherwise noted)

PARAMETER	TEST CONDITIONS		SN54AS573A			SN74AS573A			UNIT
			MIN	TYP‡	MAX	MIN	TYP‡	MAX	
V_{IK}	V_{CC} = 4.5 V,	I_I = −18 mA			−1.2			−1.2	V
V_{OH}	V_{CC} = 4.5 V to 5.5 V,	I_{OH} = −2 mA	V_{CC} −2			V_{CC} −2			V
	V_{CC} = 4.5 V	I_{OH} = −12 mA	2.4	3.2					
		I_{OH} = −15 mA				2.4	3.3		
V_{OL}	V_{CC} = 4.5 V	I_{OL} = 32 mA		0.28	0.5				V
		I_{OL} = 48 mA					0.33	0.5	
I_{OZH}	V_{CC} = 5.5 V,	V_O = 2.7 V			50			50	µA
I_{OZL}	V_{CC} = 5.5 V,	V_O = 0.4 V			−50			−50	µA
I_I	V_{CC} = 5.5 V,	V_I = 7 V			0.1			0.1	mA
I_{IH}	V_{CC} = 5.5 V,	V_I = 2.7 V			20			20	µA
I_{IL}	V_{CC} = 5.5 V,	V_I = 0.4 V			−0.1			−0.5	mA
I_O§	V_{CC} = 5.5 V,	V_O = 2.25 V	−30		−112	−30		−112	mA
I_{CC}	V_{CC} = 5.5 V	Outputs high		56	93		56	93	mA
		Outputs low		55	90		55	90	
		Outputs disabled		65	106		65	106	

‡ All typical values are at V_{CC} = 5 V, T_A = 25°C.
§ The output conditions have been chosen to produce a current that closely approximates one half of the true short-circuit output current, I_{OS}.

switching characteristics (see Figure 1)

PARAMETER	FROM (INPUT)	TO (OUTPUT)	V_{CC} = 4.5 V to 5.5 V, C_L = 50 pF, R1 = 500 Ω, R2 = 500 Ω, T_A = MIN to MAX†				UNIT
			SN54AS573A		SN74AS573A		
			MIN	MAX	MIN	MAX	
t_{PLH}	D	Q	3	11	3	8	ns
t_{PHL}			3	8	3	7	
t_{PLH}	LE	Q	6	16.5	6	13	ns
t_{PHL}			4	9	4	7.5	
t_{PZH}	$\overline{OE}$	Q	2	8	2	6.5	ns
t_{PZL}			4	11	4	9.5	
t_{PHZ}	$\overline{OE}$	Q	2	8	2	6.5	ns
t_{PLZ}			2	8	2	7	

† For conditions shown as MIN or MAX, use the appropriate value specified under recommended operating conditions.

PARAMETER MEASUREMENT INFORMATION
SERIES 54ALS/74ALS AND 54AS/74AS DEVICES

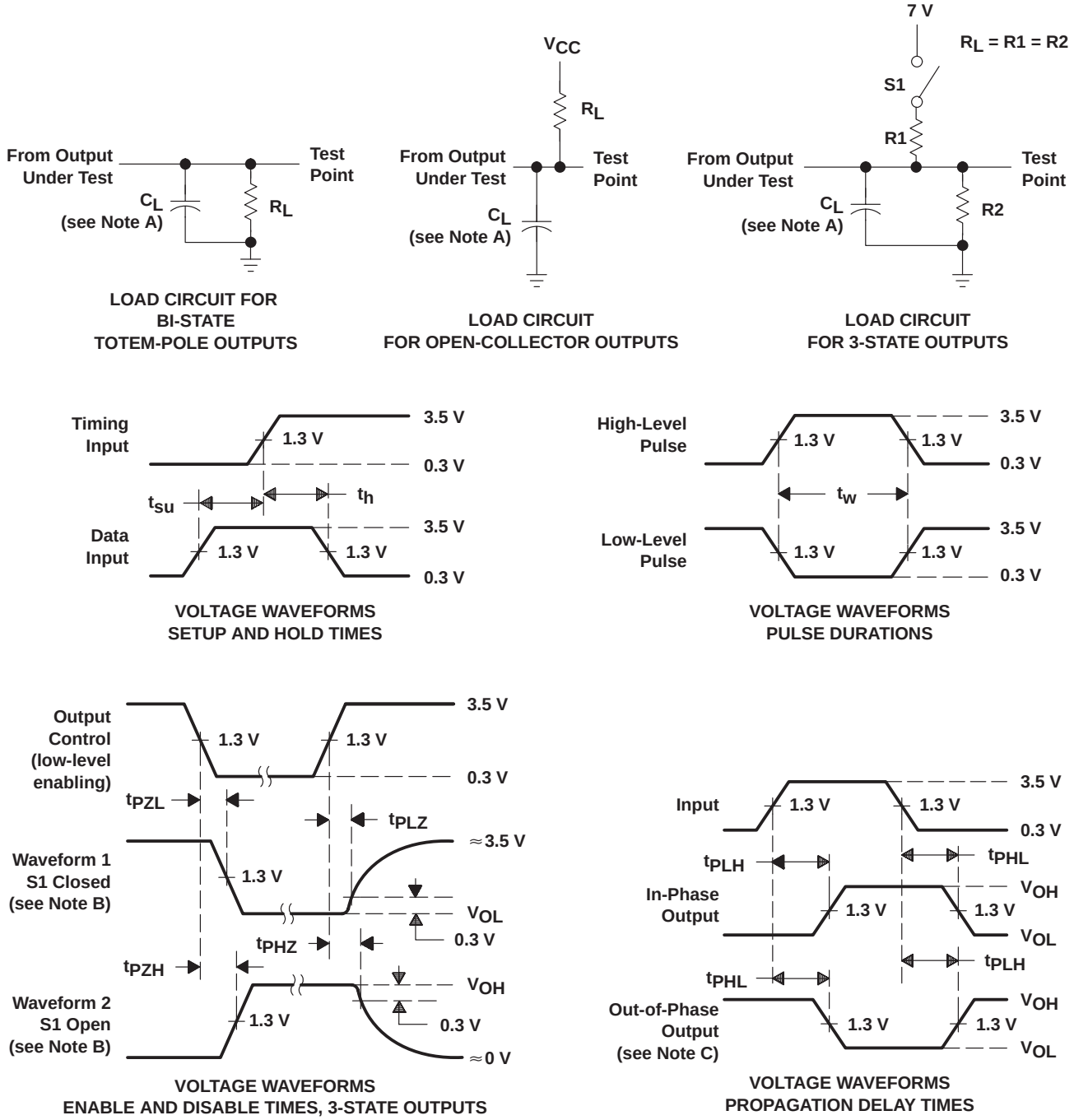

NOTES: A. C_L includes probe and jig capacitance.
B. Waveform 1 is for an output with internal conditions such that the output is low except when disabled by the output control. Waveform 2 is for an output with internal conditions such that the output is high except when disabled by the output control.
C. When measuring propagation delay items of 3-state outputs, switch S1 is open.
D. All input pulses have the following characteristics: PRR ≤ 1 MHz, $t_r = t_f$ = 2 ns, duty cycle = 50%.
E. The outputs are measured one at a time with one transition per measurement.

Figure 1. Load Circuits and Voltage Waveforms

PACKAGING INFORMATION

Orderable Device	Status (1)	Package Type	Package Drawing	Pins	Package Qty	Eco Plan (2)	Lead finish/ Ball material (6)	MSL Peak Temp (3)	Op Temp (°C)	Device Marking (4/5)	Samples
84012012A	ACTIVE	LCCC	FK	20	1	Non-RoHS & Green	SNPB	N / A for Pkg Type	-55 to 125	84012012A SNJ54ALS 573CFK	Samples
8401201RA	ACTIVE	CDIP	J	20	1	Non-RoHS & Green	SNPB	N / A for Pkg Type	-55 to 125	8401201RA SNJ54ALS573CJ	Samples
8401201SA	ACTIVE	CFP	W	20	1	Non-RoHS & Green	SNPB	N / A for Pkg Type	-55 to 125	8401201SA SNJ54ALS573CW	Samples
JM38510/38201B2A	ACTIVE	LCCC	FK	20	1	Non-RoHS & Green	SNPB	N / A for Pkg Type	-55 to 125	JM38510/ 38201B2A	Samples
JM38510/38201BRA	ACTIVE	CDIP	J	20	1	Non-RoHS & Green	SNPB	N / A for Pkg Type	-55 to 125	JM38510/ 38201BRA	Samples
M38510/38201B2A	ACTIVE	LCCC	FK	20	1	Non-RoHS & Green	SNPB	N / A for Pkg Type	-55 to 125	JM38510/ 38201B2A	Samples
M38510/38201BRA	ACTIVE	CDIP	J	20	1	Non-RoHS & Green	SNPB	N / A for Pkg Type	-55 to 125	JM38510/ 38201BRA	Samples
SN54ALS573CJ	ACTIVE	CDIP	J	20	1	Non-RoHS & Green	SNPB	N / A for Pkg Type	-55 to 125	SN54ALS573CJ	Samples
SN54AS573AJ	ACTIVE	CDIP	J	20	1	Non-RoHS & Green	SNPB	N / A for Pkg Type	-55 to 125	SN54AS573AJ	Samples
SN74ALS573CDBR	ACTIVE	SSOP	DB	20	2000	RoHS & Green	NIPDAU	Level-1-260C-UNLIM	0 to 70	G573C	Samples
SN74ALS573CDW	ACTIVE	SOIC	DW	20	25	RoHS & Green	NIPDAU	Level-1-260C-UNLIM	0 to 70	ALS573C	Samples
SN74ALS573CDWR	ACTIVE	SOIC	DW	20	2000	RoHS & Green	NIPDAU	Level-1-260C-UNLIM	0 to 70	ALS573C	Samples
SN74ALS573CDWRG4	ACTIVE	SOIC	DW	20	2000	RoHS & Green	NIPDAU	Level-1-260C-UNLIM	0 to 70	ALS573C	Samples
SN74ALS573CN	ACTIVE	PDIP	N	20	20	RoHS & Non-Green	NIPDAU	N / A for Pkg Type	0 to 70	SN74ALS573CN	Samples
SN74ALS573CNE4	ACTIVE	PDIP	N	20	20	RoHS & Non-Green	NIPDAU	N / A for Pkg Type	0 to 70	SN74ALS573CN	Samples
SN74ALS573CNSR	ACTIVE	SO	NS	20	2000	RoHS & Green	NIPDAU	Level-1-260C-UNLIM	0 to 70	ALS573C	Samples
SN74ALS573CNSRE4	ACTIVE	SO	NS	20	2000	RoHS & Green	NIPDAU	Level-1-260C-UNLIM	0 to 70	ALS573C	Samples

Orderable Device	Status (1)	Package Type	Package Drawing	Pins	Package Qty	Eco Plan (2)	Lead finish/ Ball material (6)	MSL Peak Temp (3)	Op Temp (°C)	Device Marking (4/5)	Samples
SN74AS573ADW	ACTIVE	SOIC	DW	20	25	RoHS & Green	NIPDAU	Level-1-260C-UNLIM	0 to 70	AS573A	Samples
SN74AS573AN	ACTIVE	PDIP	N	20	20	RoHS & Non-Green	NIPDAU	N / A for Pkg Type	0 to 70	SN74AS573AN	Samples
SNJ54ALS573CFK	ACTIVE	LCCC	FK	20	1	Non-RoHS & Green	SNPB	N / A for Pkg Type	-55 to 125	84012012A SNJ54ALS 573CFK	Samples
SNJ54ALS573CJ	ACTIVE	CDIP	J	20	1	Non-RoHS & Green	SNPB	N / A for Pkg Type	-55 to 125	8401201RA SNJ54ALS573CJ	Samples
SNJ54ALS573CW	ACTIVE	CFP	W	20	1	Non-RoHS & Green	SNPB	N / A for Pkg Type	-55 to 125	8401201SA SNJ54ALS573CW	Samples
SNJ54AS573AJ	ACTIVE	CDIP	J	20	1	Non-RoHS & Green	SNPB	N / A for Pkg Type	-55 to 125	SNJ54AS573AJ	Samples

(1) The marketing status values are defined as follows:
ACTIVE: Product device recommended for new designs.
LIFEBUY: TI has announced that the device will be discontinued, and a lifetime-buy period is in effect.
NRND: Not recommended for new designs. Device is in production to support existing customers, but TI does not recommend using this part in a new design.
PREVIEW: Device has been announced but is not in production. Samples may or may not be available.
OBSOLETE: TI has discontinued the production of the device.

(2) **RoHS:** TI defines "RoHS" to mean semiconductor products that are compliant with the current EU RoHS requirements for all 10 RoHS substances, including the requirement that RoHS substance do not exceed 0.1% by weight in homogeneous materials. Where designed to be soldered at high temperatures, "RoHS" products are suitable for use in specified lead-free processes. TI may reference these types of products as "Pb-Free".
RoHS Exempt: TI defines "RoHS Exempt" to mean products that contain lead but are compliant with EU RoHS pursuant to a specific EU RoHS exemption.
Green: TI defines "Green" to mean the content of Chlorine (Cl) and Bromine (Br) based flame retardants meet JS709B low halogen requirements of <=1000ppm threshold. Antimony trioxide based flame retardants must also meet the <=1000ppm threshold requirement.

(3) MSL, Peak Temp. - The Moisture Sensitivity Level rating according to the JEDEC industry standard classifications, and peak solder temperature.

(4) There may be additional marking, which relates to the logo, the lot trace code information, or the environmental category on the device.

(5) Multiple Device Markings will be inside parentheses. Only one Device Marking contained in parentheses and separated by a "~" will appear on a device. If a line is indented then it is a continuation of the previous line and the two combined represent the entire Device Marking for that device.

(6) Lead finish/Ball material - Orderable Devices may have multiple material finish options. Finish options are separated by a vertical ruled line. Lead finish/Ball material values may wrap to two lines if the finish value exceeds the maximum column width.

Important Information and Disclaimer: The information provided on this page represents TI's knowledge and belief as of the date that it is provided. TI bases its knowledge and belief on information provided by third parties, and makes no representation or warranty as to the accuracy of such information. Efforts are underway to better integrate information from third parties. TI has taken and continues to take reasonable steps to provide representative and accurate information but may not have conducted destructive testing or chemical analysis on incoming materials and chemicals. TI and TI suppliers consider certain information to be proprietary, and thus CAS numbers and other limited information may not be available for release.

In no event shall TI's liability arising out of such information exceed the total purchase price of the TI part(s) at issue in this document sold by TI to Customer on an annual basis.

OTHER QUALIFIED VERSIONS OF SN54ALS573C, SN54AS573A, SN74ALS573C, SN74AS573A :

- Catalog : SN74ALS573C, SN74AS573A
- Military : SN54ALS573C, SN54AS573A

NOTE: Qualified Version Definitions:

- Catalog - TI's standard catalog product
- Military - QML certified for Military and Defense Applications

TAPE AND REEL INFORMATION

REEL DIMENSIONS

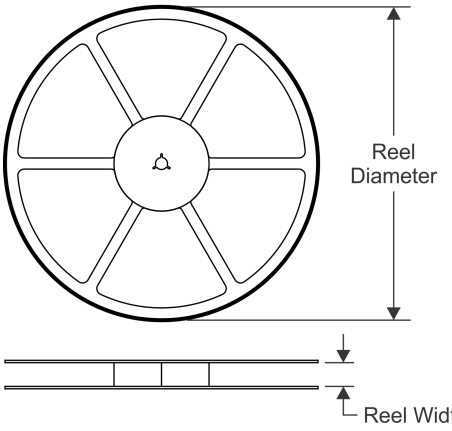

TAPE DIMENSIONS

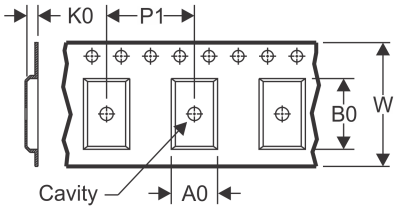

A0	Dimension designed to accommodate the component width
B0	Dimension designed to accommodate the component length
K0	Dimension designed to accommodate the component thickness
W	Overall width of the carrier tape
P1	Pitch between successive cavity centers

QUADRANT ASSIGNMENTS FOR PIN 1 ORIENTATION IN TAPE

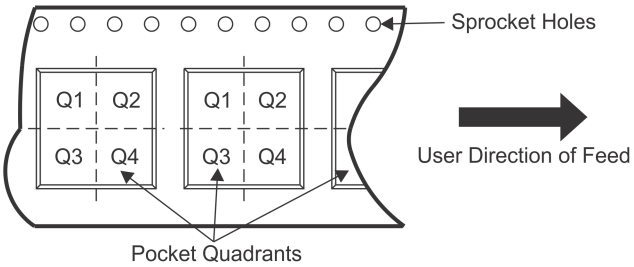

*All dimensions are nominal

Device	Package Type	Package Drawing	Pins	SPQ	Reel Diameter (mm)	Reel Width W1 (mm)	A0 (mm)	B0 (mm)	K0 (mm)	P1 (mm)	W (mm)	Pin1 Quadrant
SN74ALS573CDBR	SSOP	DB	20	2000	330.0	16.4	8.2	7.5	2.5	12.0	16.0	Q1
SN74ALS573CDWR	SOIC	DW	20	2000	330.0	24.4	10.8	13.3	2.7	12.0	24.0	Q1
SN74ALS573CNSR	SO	NS	20	2000	330.0	24.4	8.4	13.0	2.5	12.0	24.0	Q1

TAPE AND REEL BOX DIMENSIONS

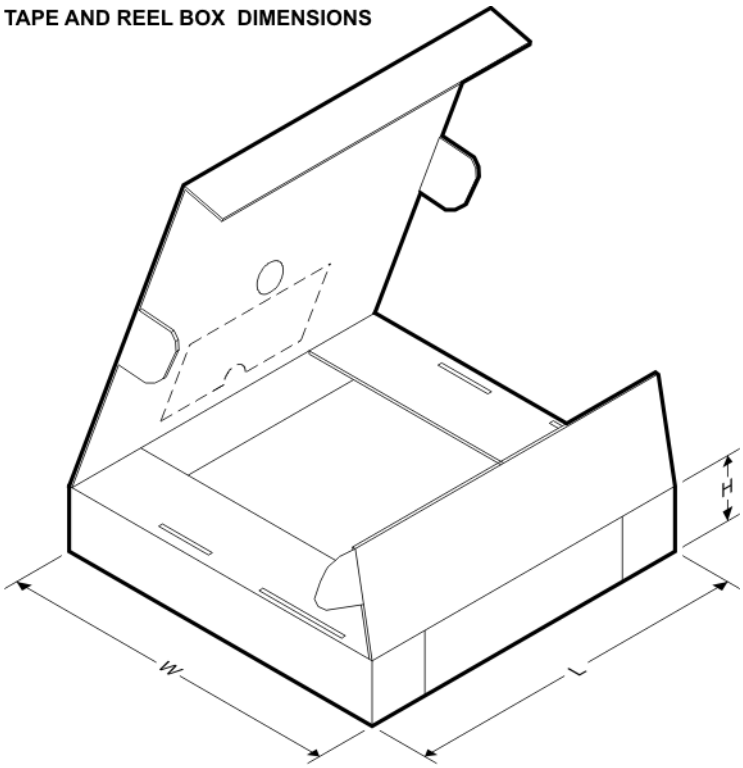

*All dimensions are nominal

Device	Package Type	Package Drawing	Pins	SPQ	Length (mm)	Width (mm)	Height (mm)
SN74ALS573CDBR	SSOP	DB	20	2000	853.0	449.0	35.0
SN74ALS573CDWR	SOIC	DW	20	2000	367.0	367.0	45.0
SN74ALS573CNSR	SO	NS	20	2000	367.0	367.0	45.0

TUBE

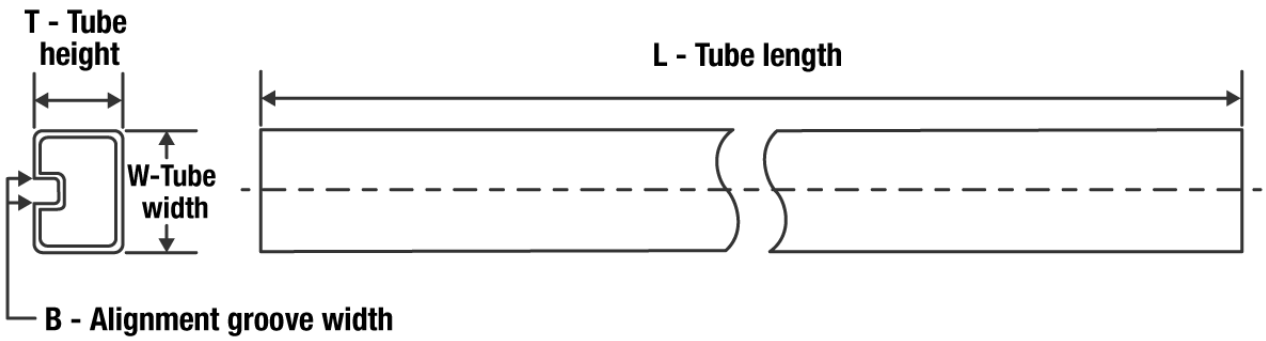

*All dimensions are nominal

Device	Package Name	Package Type	Pins	SPQ	L (mm)	W (mm)	T (µm)	B (mm)
84012012A	FK	LCCC	20	1	506.98	12.06	2030	NA
JM38510/38201B2A	FK	LCCC	20	1	506.98	12.06	2030	NA
M38510/38201B2A	FK	LCCC	20	1	506.98	12.06	2030	NA
SN74ALS573CDW	DW	SOIC	20	25	507	12.83	5080	6.6
SN74ALS573CN	N	PDIP	20	20	506	13.97	11230	4.32
SN74ALS573CNE4	N	PDIP	20	20	506	13.97	11230	4.32
SN74AS573ADW	DW	SOIC	20	25	507	12.83	5080	6.6
SN74AS573AN	N	PDIP	20	20	506	13.97	11230	4.32
SNJ54ALS573CFK	FK	LCCC	20	1	506.98	12.06	2030	NA

W (R–GDFP–F20) CERAMIC DUAL FLATPACK

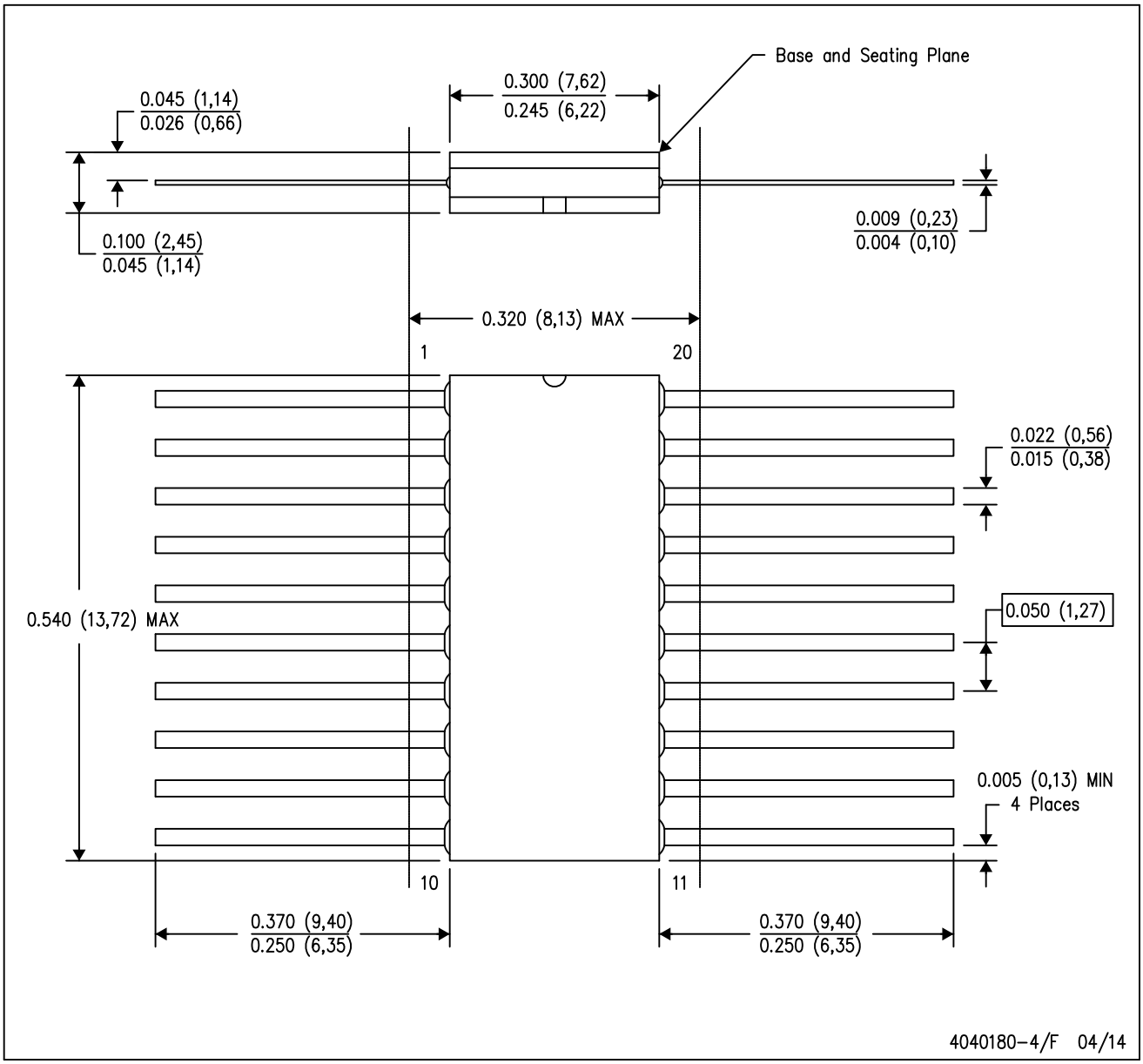

NOTES:
A. All linear dimensions are in inches (millimeters).
B. This drawing is subject to change without notice.
C. This package can be hermetically sealed with a ceramic lid using glass frit.
D. Index point is provided on cap for terminal identification only.
E. Falls within Mil–Std 1835 GDFP2–F20

FK (S–CQCC–N**) LEADLESS CERAMIC CHIP CARRIER

28 TERMINAL SHOWN

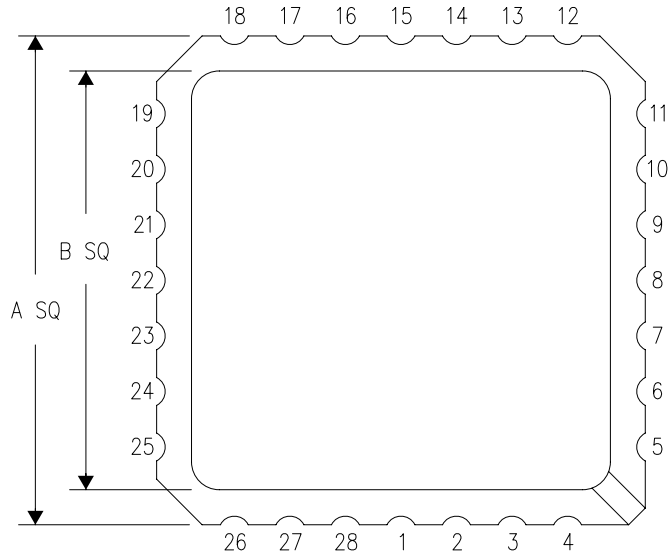

NO. OF TERMINALS **	A		B	
	MIN	MAX	MIN	MAX
20	0.342 (8,69)	0.358 (9,09)	0.307 (7,80)	0.358 (9,09)
28	0.442 (11,23)	0.458 (11,63)	0.406 (10,31)	0.458 (11,63)
44	0.640 (16,26)	0.660 (16,76)	0.495 (12,58)	0.560 (14,22)
52	0.740 (18,78)	0.761 (19,32)	0.495 (12,58)	0.560 (14,22)
68	0.938 (23,83)	0.962 (24,43)	0.850 (21,6)	0.858 (21,8)
84	1.141 (28,99)	1.165 (29,59)	1.047 (26,6)	1.063 (27,0)

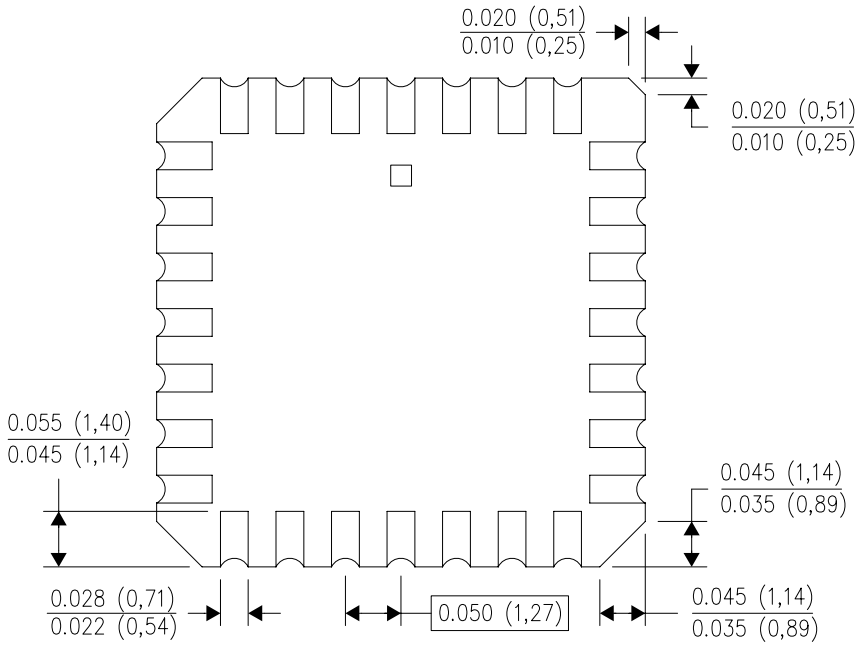

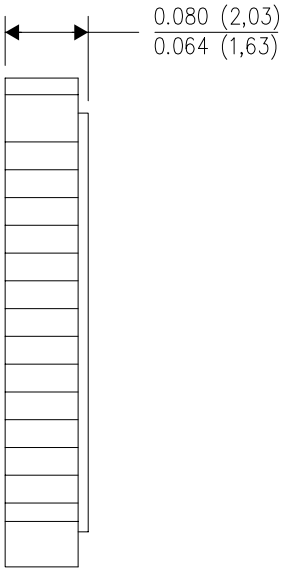

4040140/D 01/11

NOTES:
A. All linear dimensions are in inches (millimeters).
B. This drawing is subject to change without notice.
C. This package can be hermetically sealed with a metal lid.
D. Falls within JEDEC MS–004

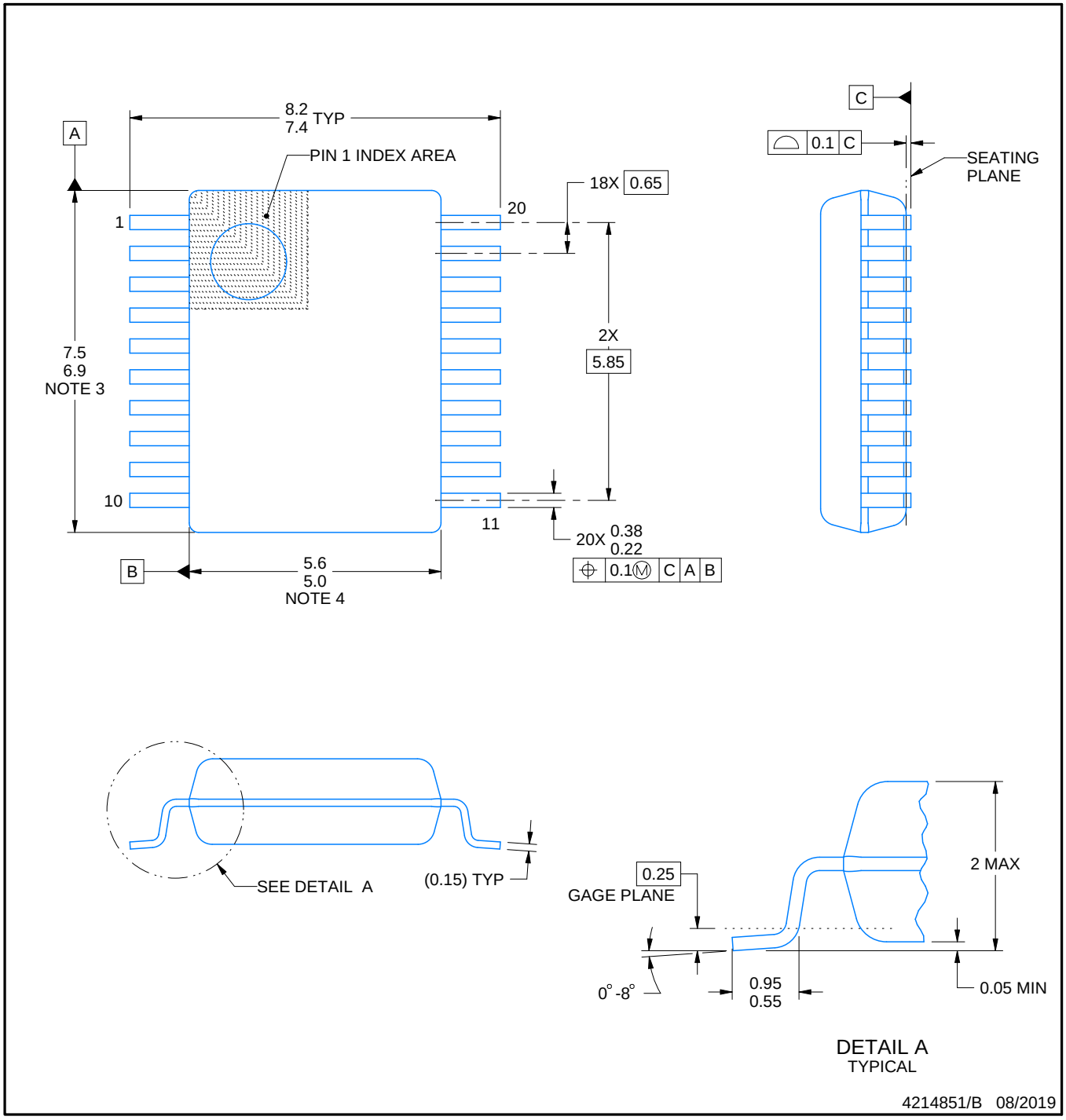

NOTES:

1. All linear dimensions are in millimeters. Any dimensions in parenthesis are for reference only. Dimensioning and tolerancing per ASME Y14.5M.
2. This drawing is subject to change without notice.
3. This dimension does not include mold flash, protrusions, or gate burrs. Mold flash, protrusions, or gate burrs shall not exceed 0.15 mm per side.
4. This dimension does not include interlead flash. Interlead flash shall not exceed 0.25 mm per side.
5. Reference JEDEC registration MO-150.

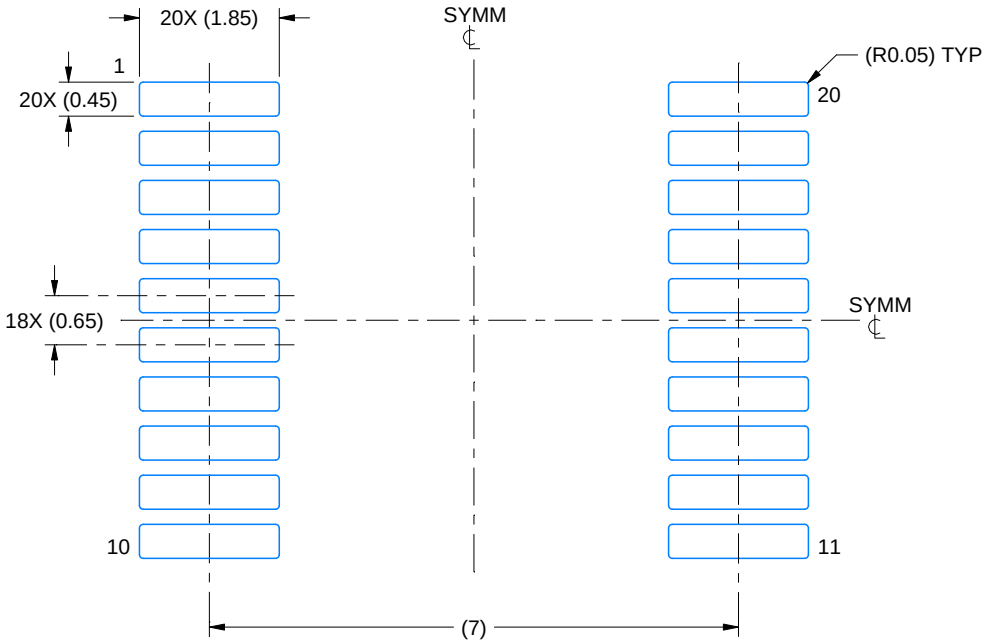

LAND PATTERN EXAMPLE
EXPOSED METAL SHOWN
SCALE: 10X

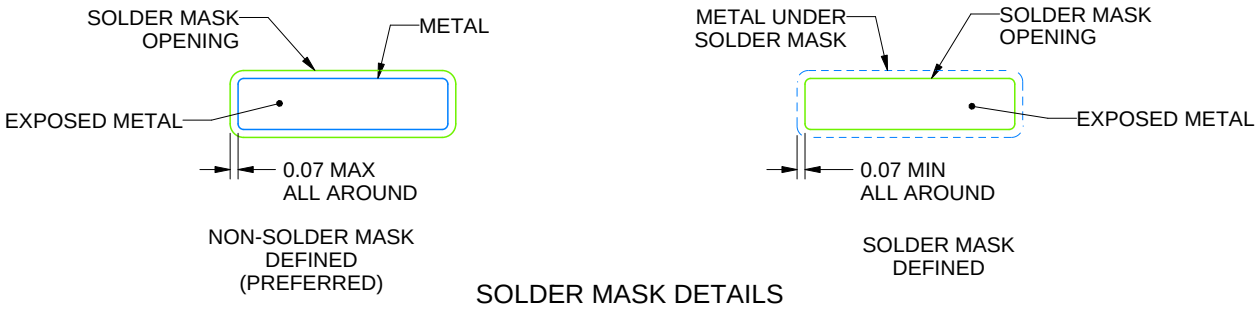

SOLDER MASK DETAILS

4214851/B 08/2019

NOTES: (continued)

6. Publication IPC-7351 may have alternate designs.
7. Solder mask tolerances between and around signal pads can vary based on board fabrication site.

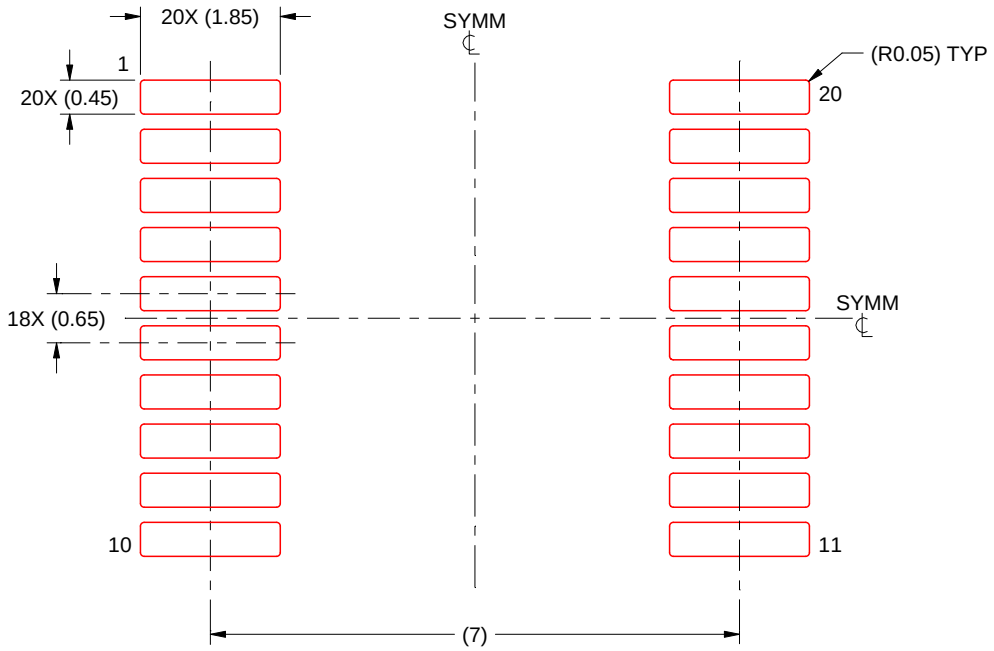

SOLDER PASTE EXAMPLE
BASED ON 0.125 mm THICK STENCIL
SCALE: 10X

4214851/B 08/2019

NOTES: (continued)

8. Laser cutting apertures with trapezoidal walls and rounded corners may offer better paste release. IPC-7525 may have alternate design recommendations.
9. Board assembly site may have different recommendations for stencil design.

MECHANICAL DATA

NS (R-PDSO-G)** **PLASTIC SMALL-OUTLINE PACKAGE**

14-PINS SHOWN

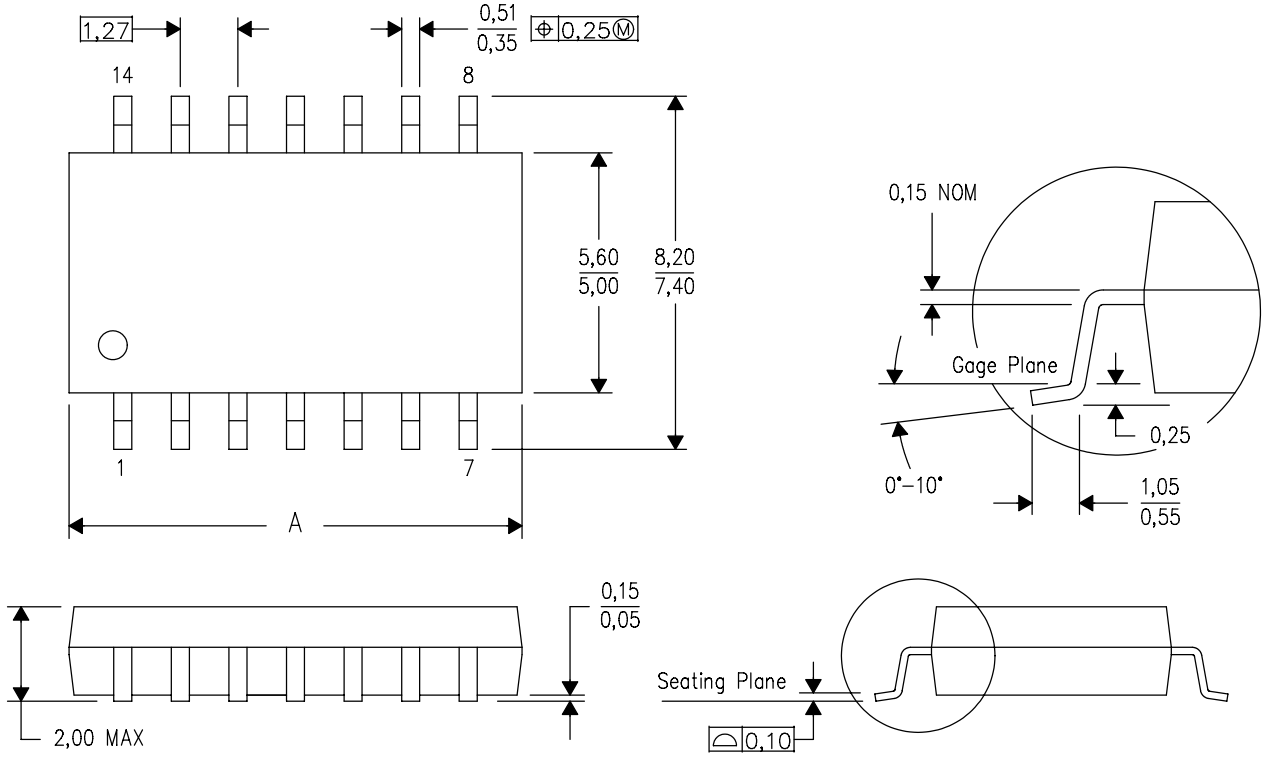

DIM \ PINS **	14	16	20	24
A MAX	10,50	10,50	12,90	15,30
A MIN	9,90	9,90	12,30	14,70

4040062/C 03/03

NOTES:
A. All linear dimensions are in millimeters.
B. This drawing is subject to change without notice.
C. Body dimensions do not include mold flash or protrusion, not to exceed 0,15.

J (R–GDIP–T**) CERAMIC DUAL IN–LINE PACKAGE

14 LEADS SHOWN

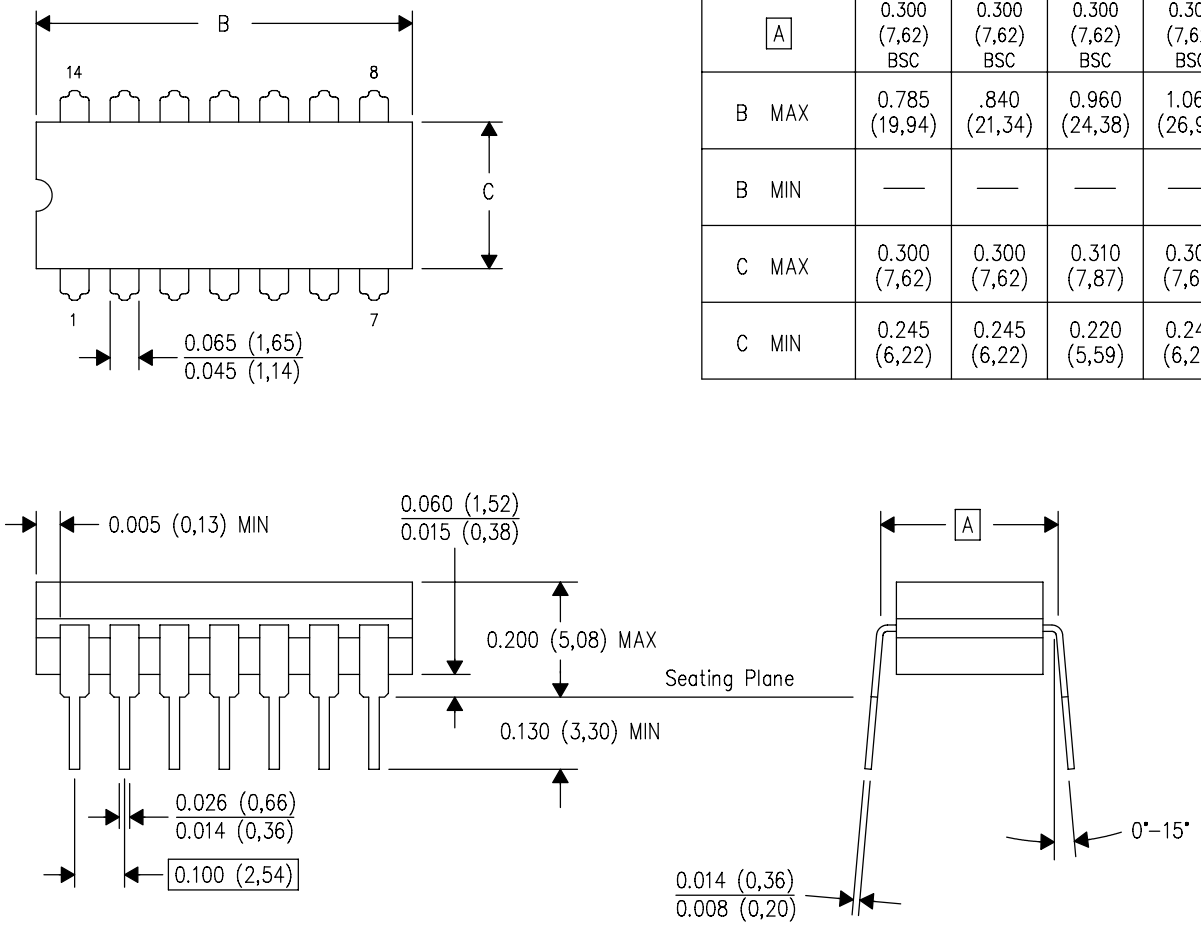

DIM \ PINS **	14	16	18	20
A	0.300 (7,62) BSC	0.300 (7,62) BSC	0.300 (7,62) BSC	0.300 (7,62) BSC
B MAX	0.785 (19,94)	.840 (21,34)	0.960 (24,38)	1.060 (26,92)
B MIN	—	—	—	—
C MAX	0.300 (7,62)	0.300 (7,62)	0.310 (7,87)	0.300 (7,62)
C MIN	0.245 (6,22)	0.245 (6,22)	0.220 (5,59)	0.245 (6,22)

4040083/F 03/03

NOTES:
- A. All linear dimensions are in inches (millimeters).
- B. This drawing is subject to change without notice.
- C. This package is hermetically sealed with a ceramic lid using glass frit.
- D. Index point is provided on cap for terminal identification only on press ceramic glass frit seal only.
- E. Falls within MIL STD 1835 GDIP1–T14, GDIP1–T16, GDIP1–T18 and GDIP1–T20.

N (R–PDIP–T**) PLASTIC DUAL–IN–LINE PACKAGE

16 PINS SHOWN

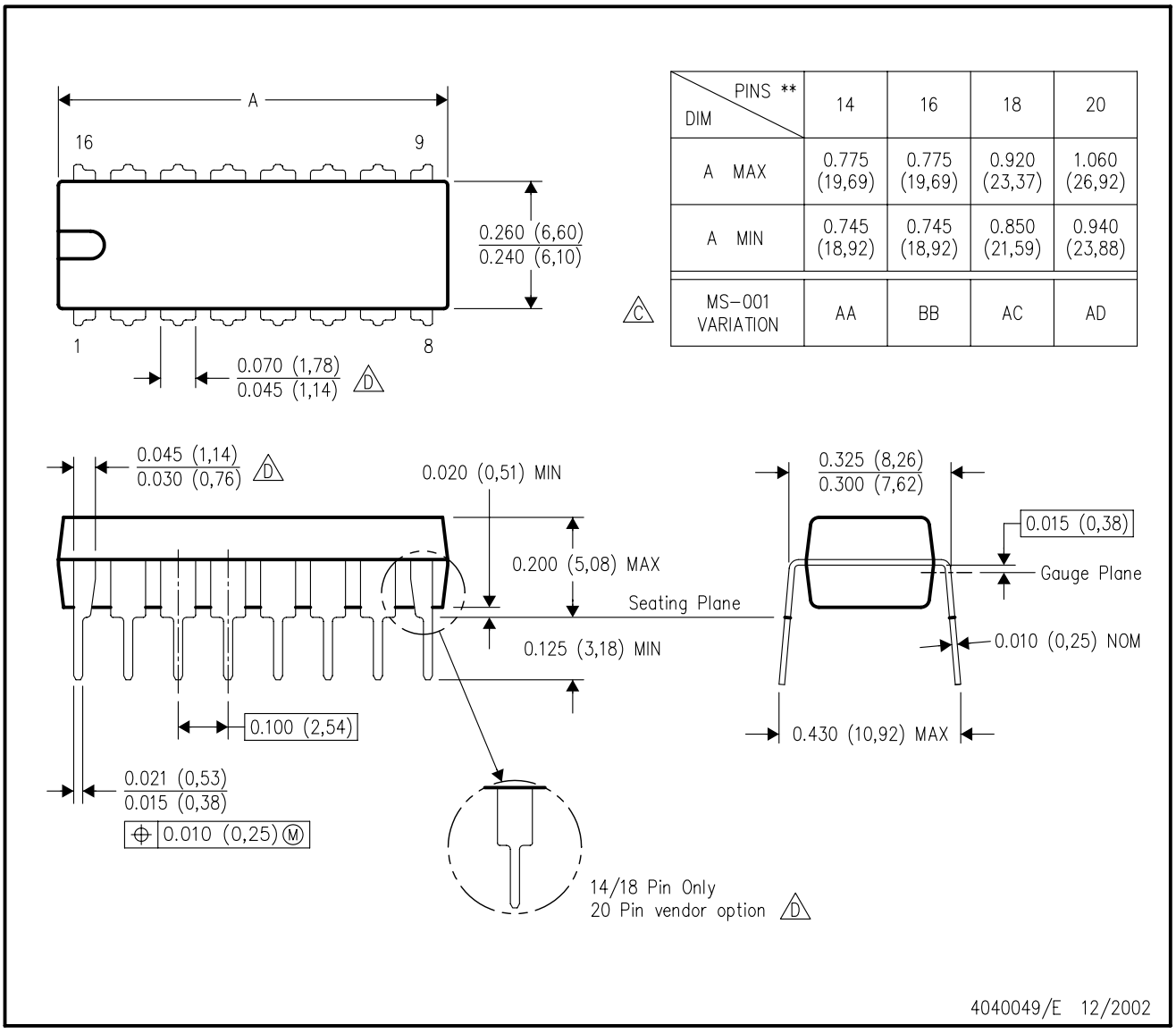

DIM \ PINS **	14	16	18	20
A MAX	0.775 (19,69)	0.775 (19,69)	0.920 (23,37)	1.060 (26,92)
A MIN	0.745 (18,92)	0.745 (18,92)	0.850 (21,59)	0.940 (23,88)
MS–001 VARIATION (C)	AA	BB	AC	AD

NOTES:
A. All linear dimensions are in inches (millimeters).
B. This drawing is subject to change without notice.
C. Falls within JEDEC MS–001, except 18 and 20 pin minimum body length (Dim A).
D. The 20 pin end lead shoulder width is a vendor option, either half or full width.

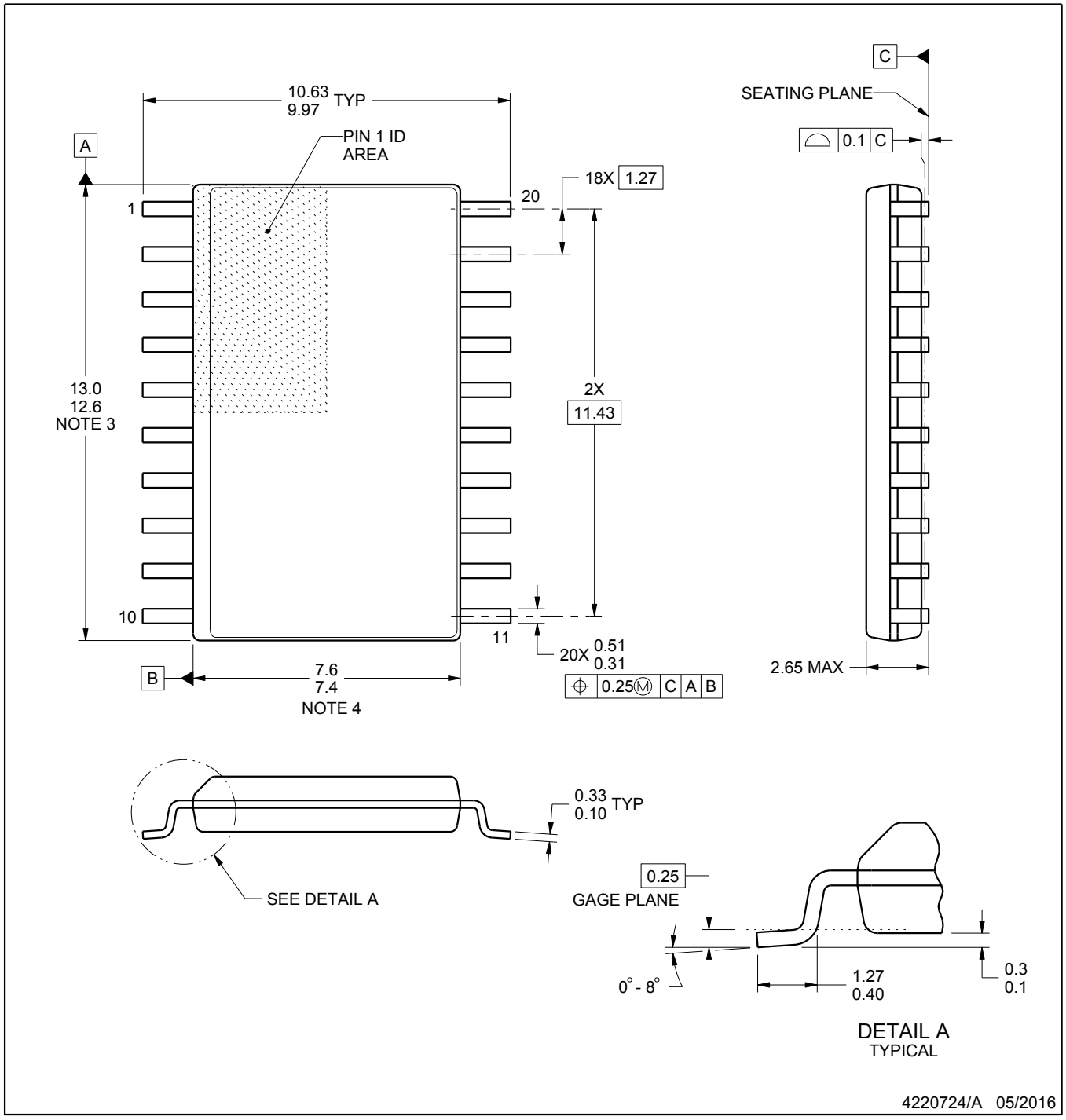

NOTES:

1. All linear dimensions are in millimeters. Dimensions in parenthesis are for reference only. Dimensioning and tolerancing per ASME Y14.5M.
2. This drawing is subject to change without notice.
3. This dimension does not include mold flash, protrusions, or gate burrs. Mold flash, protrusions, or gate burrs shall not exceed 0.15 mm per side.
4. This dimension does not include interlead flash. Interlead flash shall not exceed 0.43 mm per side.
5. Reference JEDEC registration MS-013.

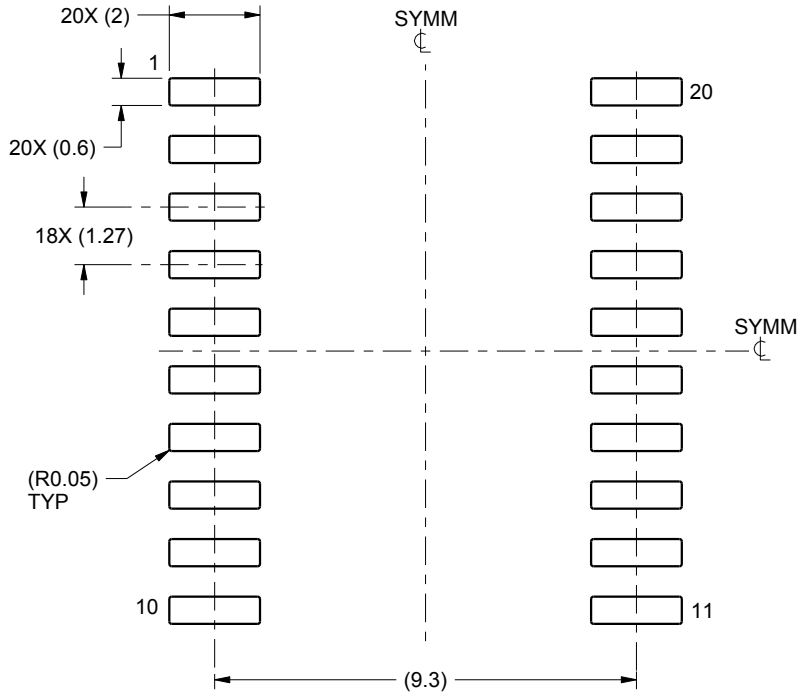

LAND PATTERN EXAMPLE
SCALE:6X

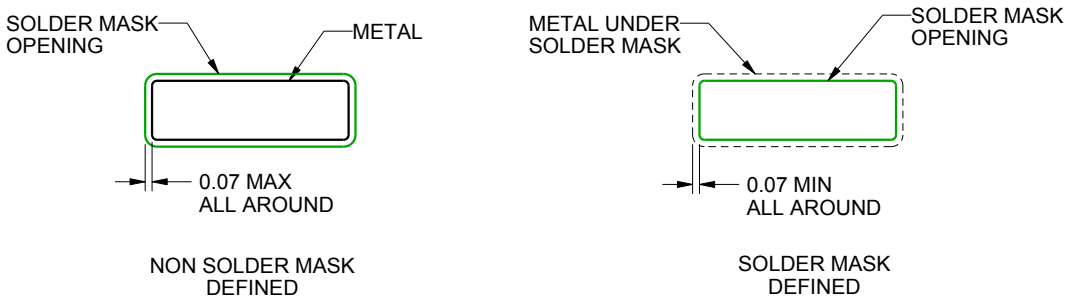

SOLDER MASK DETAILS

4220724/A 05/2016

NOTES: (continued)

6. Publication IPC-7351 may have alternate designs.
7. Solder mask tolerances between and around signal pads can vary based on board fabrication site.

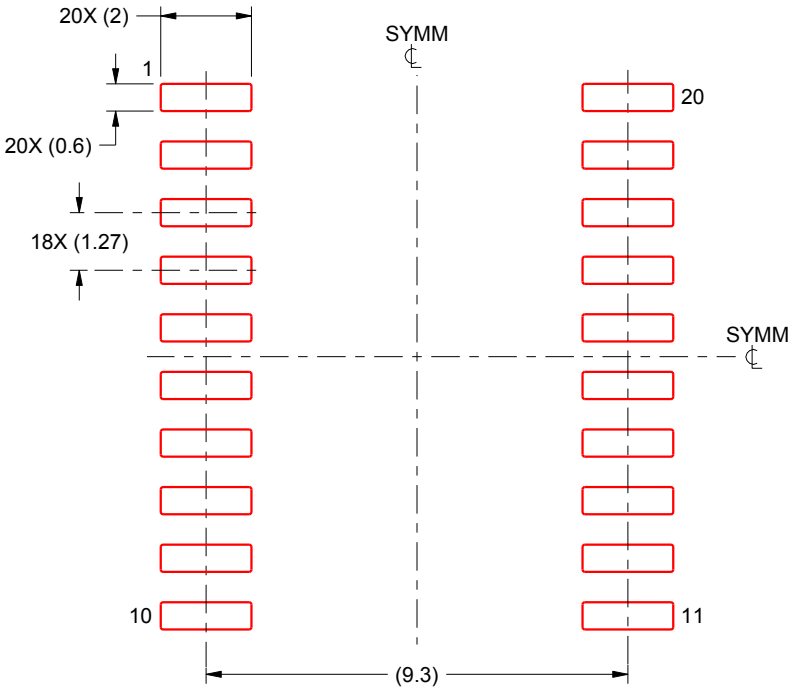

SOLDER PASTE EXAMPLE
BASED ON 0.125 mm THICK STENCIL
SCALE:6X

4220724/A 05/2016

NOTES: (continued)

8. Laser cutting apertures with trapezoidal walls and rounded corners may offer better paste release. IPC-7525 may have alternate design recommendations.
9. Board assembly site may have different recommendations for stencil design.

IMPORTANT NOTICE AND DISCLAIMER

TI PROVIDES TECHNICAL AND RELIABILITY DATA (INCLUDING DATA SHEETS), DESIGN RESOURCES (INCLUDING REFERENCE DESIGNS), APPLICATION OR OTHER DESIGN ADVICE, WEB TOOLS, SAFETY INFORMATION, AND OTHER RESOURCES “AS IS” AND WITH ALL FAULTS, AND DISCLAIMS ALL WARRANTIES, EXPRESS AND IMPLIED, INCLUDING WITHOUT LIMITATION ANY IMPLIED WARRANTIES OF MERCHANTABILITY, FITNESS FOR A PARTICULAR PURPOSE OR NON-INFRINGEMENT OF THIRD PARTY INTELLECTUAL PROPERTY RIGHTS.

These resources are intended for skilled developers designing with TI products. You are solely responsible for (1) selecting the appropriate TI products for your application, (2) designing, validating and testing your application, and (3) ensuring your application meets applicable standards, and any other safety, security, regulatory or other requirements.

These resources are subject to change without notice. TI grants you permission to use these resources only for development of an application that uses the TI products described in the resource. Other reproduction and display of these resources is prohibited. No license is granted to any other TI intellectual property right or to any third party intellectual property right. TI disclaims responsibility for, and you will fully indemnify TI and its representatives against, any claims, damages, costs, losses, and liabilities arising out of your use of these resources.

TI’s products are provided subject to TI’s Terms of Sale or other applicable terms available either on ti.com or provided in conjunction with such TI products. TI’s provision of these resources does not expand or otherwise alter TI’s applicable warranties or warranty disclaimers for TI products.

TI objects to and rejects any additional or different terms you may have proposed.

Mailing Address: Texas Instruments, Post Office Box 655303, Dallas, Texas 75265
Copyright © 2022, Texas Instruments Incorporated