- **Operating Voltage Range of 4.5 V to 5.5 V**
- **State-of-the-Art BiCMOS Design Significantly Reduces I_{CCZ}**
- **3-State Outputs Drive Bus Lines or Buffer Memory Address Registers**
- **P-N-P Inputs Reduce DC Loading**
- **Data Flow-Through Pinout (All Inputs on Opposite Side From Outputs)**

SN54BCT541 . . . J OR W PACKAGE
SN74BCT541A . . . DW, N, OR NS PACKAGE
(TOP VIEW)

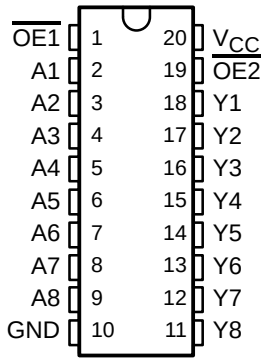

SN54BCT541 . . . FK PACKAGE
(TOP VIEW)

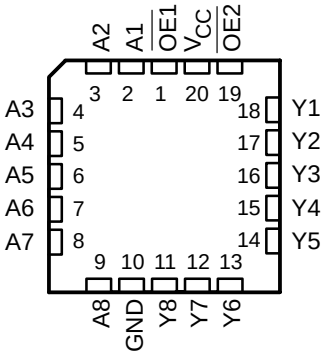

description/ordering information

The SN54BCT541 and SN74BCT541A octal buffers and line drivers are ideal for driving bus lines or buffering memory-address registers. The devices feature inputs and outputs on opposite sides of the package to facilitate printed-circuit-board layout.

The 3-state control gate is a 2-input AND gate with active-low inputs so that, if either output-enable ($\overline{OE1}$ or $\overline{OE2}$) input is high, all eight outputs are in the high-impedance state.

To ensure the high-impedance state during power up or power down, $\overline{OE}$ should be tied to V_{CC} through a pullup resistor; the minimum value of the resistor is determined by the current-sinking capability of the driver.

ORDERING INFORMATION

T_A	PACKAGE†		ORDERABLE PART NUMBER	TOP-SIDE MARKING
0°C to 70°C	PDIP – N	Tube	SN74BCT541AN	SN74BCT541AN
	SOIC – DW	Tube	SN74BCT541ADW	BCT541A
		Tape and reel	SN74BCT541ADWR	
	SOP – NS	Tape and reel	SN74BCT541ANSR	BCT541A
–55°C to 125°C	CDIP – J	Tube	SNJ54BCT541J	SNJ54BCT541J
	CFP – W	Tube	SNJ54BCT541W	SNJ54BCT541W
	LCCC – FK	Tube	SNJ54BCT541FK	SNJ54BCT541FK

† Package drawings, standard packing quantities, thermal data, symbolization, and PCB design guidelines are available at www.ti.com/sc/package.

Please be aware that an important notice concerning availability, standard warranty, and use in critical applications of Texas Instruments semiconductor products and disclaimers thereto appears at the end of this data sheet.

PRODUCTION DATA information is current as of publication date. Products conform to specifications per the terms of Texas Instruments standard warranty. Production processing does not necessarily include testing of all parameters.

Copyright © 2003, Texas Instruments Incorporated

On products compliant to MIL-PRF-38535, all parameters are tested unless otherwise noted. On all other products, production processing does not necessarily include testing of all parameters.

FUNCTION TABLE

INPUTS			OUTPUT
$\overline{OE1}$	$\overline{OE2}$	A	Y
L	L	L	L
L	L	H	H
H	X	X	Z
X	H	X	Z

logic diagram (positive logic)

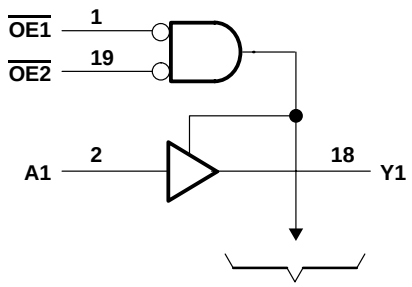

To Seven Other Channels

absolute maximum ratings over operating free-air temperature range (unless otherwise noted)†

Supply voltage range, V_{CC} . . . . . –0.5 V to 7 V
Input voltage range, V_I (see Note 1) . . . . . –0.5 V to 7 V
Voltage range applied to any output in the disabled or power-off state, V_O . . . . . –0.5 V to 5.5 V
Voltage range applied to any output in the high state, V_O . . . . . –0.5 V to V_{CC}
Current into any output in the low state: SN54BCT541 . . . . . 96 mA
SN74BCT541A . . . . . 128 mA
Package thermal impedance, θ_{JA} (see Note 2): DW package . . . . . 58°C/W
N package . . . . . 69°C/W
NS package . . . . . 60°C/W
Storage temperature range, T_{stg} . . . . . –65°C to 150°C

† Stresses beyond those listed under “absolute maximum ratings” may cause permanent damage to the device. These are stress ratings only, and functional operation of the device at these or any other conditions beyond those indicated under “recommended operating conditions” is not implied. Exposure to absolute-maximum-rated conditions for extended periods may affect device reliability.

NOTES: 1. The input and output voltage ratings may be exceeded if the input and output current ratings are observed.
2. The package thermal impedance is calculated in accordance with JESD 51-7.

recommended operating conditions (see Note 3)

		SN54BCT541			SN74BCT541A			UNIT
		MIN	NOM	MAX	MIN	NOM	MAX	
V_{CC}	Supply voltage	4.5	5	5.5	4.5	5	5.5	V
V_{IH}	High-level input voltage	2			2			V
V_{IL}	Low-level input voltage			0.8			0.8	V
I_{IK}	Input clamp current			–18			–18	mA
I_{OH}	High-level output current			–12			–15	mA
I_{OL}	Low-level output current			48			64	mA
T_A	Operating free-air temperature	–55		125	0		70	°C

NOTE 3: All unused inputs of the device must be held at V_{CC} or GND to ensure proper device operation. Refer to the TI application report, *Implications of Slow or Floating CMOS Inputs*, literature number SCBA004.

electrical characteristics over recommended operating free-air temperature range (unless otherwise noted)

PARAMETER	TEST CONDITIONS		SN54BCT541			SN74BCT541A			UNIT
			MIN	TYP†	MAX	MIN	TYP†	MAX	
V_{IK}	V_{CC} = 4.5 V,	I_I = –18 mA			–1.2			–1.2	V
V_{OH}	V_{CC} = 4.5 V	I_{OH} = –3 mA	2.4	3.3		2.4	3.3		V
		I_{OH} = –12 mA	2	3.2					
		I_{OH} = –15 mA				2	3.1		
V_{OL}	V_{CC} = 4.5 V	I_{OL} = 48 mA		0.38	0.55				V
		I_{OL} = 64 mA					0.42	0.55	
I_I	V_{CC} = 5.5 V,	V_I = 7 V			0.1			0.1	mA
I_{IH}	V_{CC} = 5.5 V,	V_I = 2.7 V			20			20	µA
I_{IL}	V_{CC} = 5.5 V,	V_I = 0.5 V			–0.6			–0.6	mA
I_{OZH}	V_{CC} = 5.5 V,	V_O = 2.7 V			50			50	µA
I_{OZL}	V_{CC} = 5.5 V,	V_O = 0.5 V			–50			–50	µA
I_{OS}‡	V_{CC} = 5.5 V,	V_O = 0	–100		–225	–100		–225	mA
I_{CCH}	V_{CC} = 5.5 V			27	40		27	40	mA
I_{CCL}	V_{CC} = 5.5 V			47	72		47	72	mA
I_{CCZ}	V_{CC} = 5.5 V			5	7		5	7	mA
C_i	V_{CC} = 5 V,	V_I = 2.5 V or 0.5 V		5			5		pF
C_o	V_{CC} = 5 V,	V_O = 2.5 V or 0.5 V		10			10		pF

† All typical values are at V_{CC} = 5 V, T_A = 25°C.
‡ Not more than one output should be tested at a time, and the duration of the test should not exceed one second.

switching characteristics (see Figure 1)

PARAMETER	FROM (INPUT)	TO (OUTPUT)	V_{CC} = 5 V, C_L = 50 pF, R1 = 500 Ω, R2 = 500 Ω, T_A = 25°C			V_{CC} = 4.5 V to 5.5 V, C_L = 50 pF, R1 = 500 Ω, R2 = 500 Ω, T_A = MIN to MAX§				UNIT
			'BCT541			SN54BCT541		SN74BCT541A		
			MIN	TYP	MAX	MIN	MAX	MIN	MAX	
t_{PLH}	A	Y	2.1	3.7	5.3	1.7	6.3	1.7	6	ns
t_{PHL}			3.7	5.5	7.5	3.2	8.7	3.4	8.2	
t_{PZH}	$\overline{OE}$	Y	4.5	7.2	9.3	4.4	11	3.9	10.7	ns
t_{PZL}			5	8	10.4	5.4	12.4	4.4	11.5	
t_{PHZ}	$\overline{OE}$	Y	3.5	5.6	7.6	3	9.1	3	8.6	ns
t_{PLZ}			3.4	5.2	7.2	3	9.4	3	8.6	

§ For conditions shown as MIN or MAX, use the appropriate value specified under recommended operating conditions.

PARAMETER MEASUREMENT INFORMATION

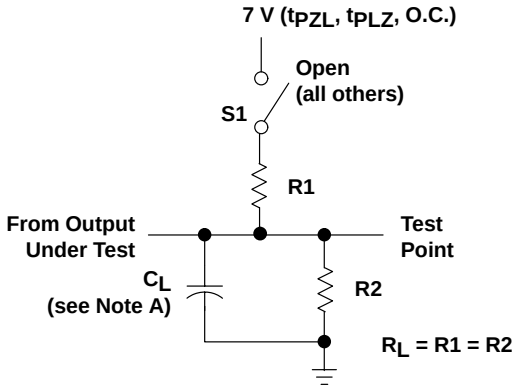

LOAD CIRCUIT FOR
3-STATE AND OPEN-COLLECTOR OUTPUTS

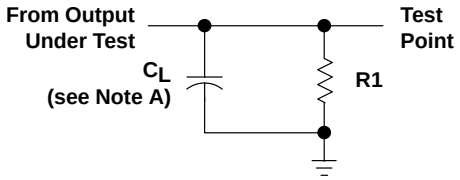

LOAD CIRCUIT FOR
TOTEM-POLE OUTPUTS

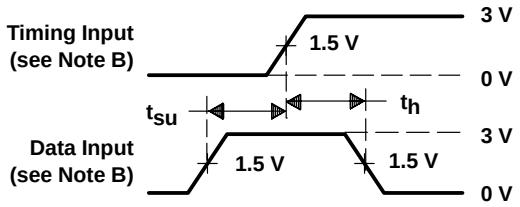

VOLTAGE WAVEFORMS
SETUP AND HOLD TIMES

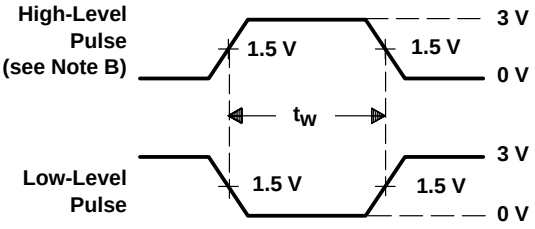

VOLTAGE WAVEFORMS
PULSE DURATION

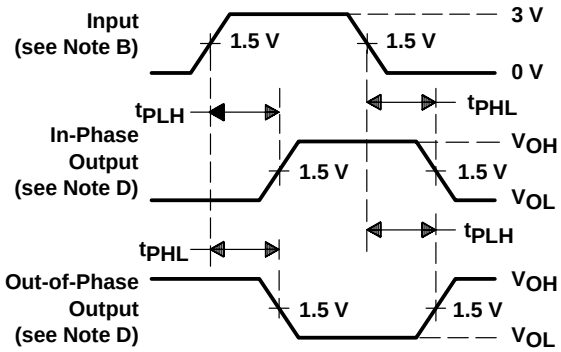

VOLTAGE WAVEFORMS
PROPAGATION DELAY TIMES (see Note D)

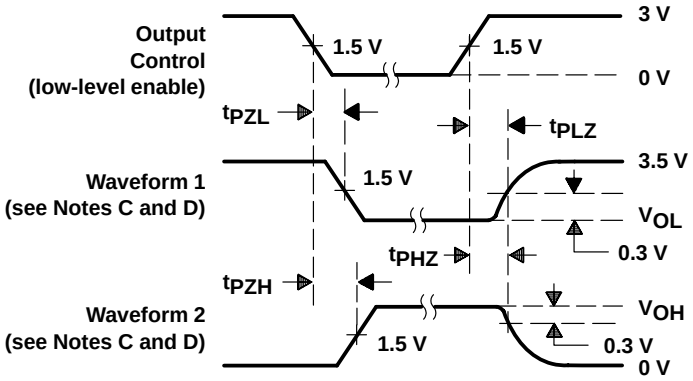

VOLTAGE WAVEFORMS
ENABLE AND DISABLE TIMES, 3-STATE OUTPUTS

NOTES: A. C_L includes probe and jig capacitance.
B. All input pulses are supplied by generators having the following characteristics: PRR ≤ 10 MHz, $t_r = t_f \leq 2.5$ ns, duty cycle = 50%.
C. Waveform 1 is for an output with internal conditions such that the output is low except when disabled by the output control.
Waveform 2 is for an output with internal conditions such that the output is high except when disabled by the output control.
D. The outputs are measured one at a time with one transition per measurement.
E. When measuring propagation delay times of 3-state outputs, switch S1 is open.
F. All parameters and waveforms are not applicable to all devices.

Figure 1. Load Circuit and Voltage Waveforms

PACKAGING INFORMATION

Orderable Device	Status [1]	Package Type	Package Drawing	Pins	Package Qty	Eco Plan [2]	Lead/Ball Finish	MSL Peak Temp [3]
5962-9074901M2A	ACTIVE	LCCC	FK	20	1	TBD	POST-PLATE	N / A for Pkg Type
5962-9074901MRA	ACTIVE	CDIP	J	20	1	TBD	A42	N / A for Pkg Type
5962-9074901MSA	ACTIVE	CFP	W	20	1	TBD	Call TI	N / A for Pkg Type
SN74BCT541ADW	ACTIVE	SOIC	DW	20	25	Green (RoHS & no Sb/Br)	CU NIPDAU	Level-1-260C-UNLIM
SN74BCT541ADWE4	ACTIVE	SOIC	DW	20	25	Green (RoHS & no Sb/Br)	CU NIPDAU	Level-1-260C-UNLIM
SN74BCT541ADWG4	ACTIVE	SOIC	DW	20	25	Green (RoHS & no Sb/Br)	CU NIPDAU	Level-1-260C-UNLIM
SN74BCT541ADWR	ACTIVE	SOIC	DW	20	2000	Green (RoHS & no Sb/Br)	CU NIPDAU	Level-1-260C-UNLIM
SN74BCT541ADWRE4	ACTIVE	SOIC	DW	20	2000	Green (RoHS & no Sb/Br)	CU NIPDAU	Level-1-260C-UNLIM
SN74BCT541ADWRG4	ACTIVE	SOIC	DW	20	2000	Green (RoHS & no Sb/Br)	CU NIPDAU	Level-1-260C-UNLIM
SN74BCT541AN	ACTIVE	PDIP	N	20	20	Pb-Free (RoHS)	CU NIPDAU	N / A for Pkg Type
SN74BCT541ANE4	ACTIVE	PDIP	N	20	20	Pb-Free (RoHS)	CU NIPDAU	N / A for Pkg Type
SN74BCT541ANSR	ACTIVE	SO	NS	20	2000	Green (RoHS & no Sb/Br)	CU NIPDAU	Level-1-260C-UNLIM
SN74BCT541ANSRE4	ACTIVE	SO	NS	20	2000	Green (RoHS & no Sb/Br)	CU NIPDAU	Level-1-260C-UNLIM
SN74BCT541ANSRG4	ACTIVE	SO	NS	20	2000	Green (RoHS & no Sb/Br)	CU NIPDAU	Level-1-260C-UNLIM
SNJ54BCT541FK	ACTIVE	LCCC	FK	20	1	TBD	POST-PLATE	N / A for Pkg Type
SNJ54BCT541J	ACTIVE	CDIP	J	20	1	TBD	A42	N / A for Pkg Type
SNJ54BCT541W	ACTIVE	CFP	W	20	1	TBD	Call TI	N / A for Pkg Type

[1] The marketing status values are defined as follows:
ACTIVE: Product device recommended for new designs.
LIFEBUY: TI has announced that the device will be discontinued, and a lifetime-buy period is in effect.
NRND: Not recommended for new designs. Device is in production to support existing customers, but TI does not recommend using this part in a new design.
PREVIEW: Device has been announced but is not in production. Samples may or may not be available.
OBSOLETE: TI has discontinued the production of the device.

[2] Eco Plan - The planned eco-friendly classification: Pb-Free (RoHS), Pb-Free (RoHS Exempt), or Green (RoHS & no Sb/Br) - please check http://www.ti.com/productcontent for the latest availability information and additional product content details.
TBD: The Pb-Free/Green conversion plan has not been defined.
Pb-Free (RoHS): TI's terms "Lead-Free" or "Pb-Free" mean semiconductor products that are compatible with the current RoHS requirements for all 6 substances, including the requirement that lead not exceed 0.1% by weight in homogeneous materials. Where designed to be soldered at high temperatures, TI Pb-Free products are suitable for use in specified lead-free processes.
Pb-Free (RoHS Exempt): This component has a RoHS exemption for either 1) lead-based flip-chip solder bumps used between the die and package, or 2) lead-based die adhesive used between the die and leadframe. The component is otherwise considered Pb-Free (RoHS compatible) as defined above.
Green (RoHS & no Sb/Br): TI defines "Green" to mean Pb-Free (RoHS compatible), and free of Bromine (Br) and Antimony (Sb) based flame retardants (Br or Sb do not exceed 0.1% by weight in homogeneous material)

[3] MSL, Peak Temp. -- The Moisture Sensitivity Level rating according to the JEDEC industry standard classifications, and peak solder temperature.

Important Information and Disclaimer: The information provided on this page represents TI's knowledge and belief as of the date that it is provided. TI bases its knowledge and belief on information provided by third parties, and makes no representation or warranty as to the accuracy of such information. Efforts are underway to better integrate information from third parties. TI has taken and continues to take reasonable steps to provide representative and accurate information but may not have conducted destructive testing or chemical analysis on incoming materials and chemicals. TI and TI suppliers consider certain information to be proprietary, and thus CAS numbers and other limited information may not be available for release.

In no event shall TI's liability arising out of such information exceed the total purchase price of the TI part(s) at issue in this document sold by TI to Customer on an annual basis.

OTHER QUALIFIED VERSIONS OF SN54BCT541 :

- Catalog: SN74BCT541

NOTE: Qualified Version Definitions:

- Catalog - TI's standard catalog product

TAPE AND REEL INFORMATION

REEL DIMENSIONS

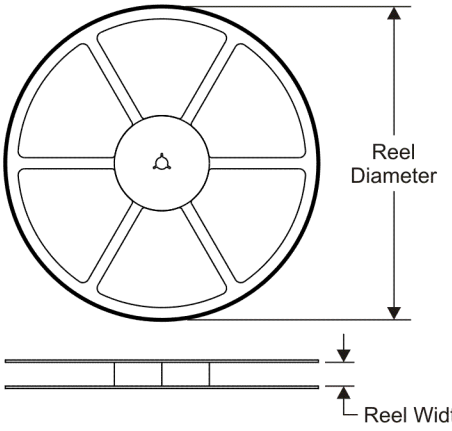

TAPE DIMENSIONS

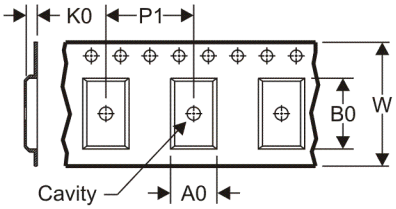

A0	Dimension designed to accommodate the component width
B0	Dimension designed to accommodate the component length
K0	Dimension designed to accommodate the component thickness
W	Overall width of the carrier tape
P1	Pitch between successive cavity centers

QUADRANT ASSIGNMENTS FOR PIN 1 ORIENTATION IN TAPE

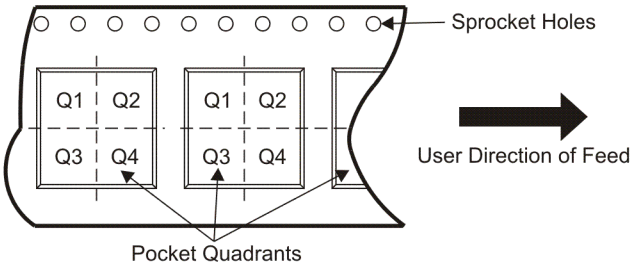

*All dimensions are nominal

Device	Package Type	Package Drawing	Pins	SPQ	Reel Diameter (mm)	Reel Width W1 (mm)	A0 (mm)	B0 (mm)	K0 (mm)	P1 (mm)	W (mm)	Pin1 Quadrant
SN74BCT541ADWR	SOIC	DW	20	2000	330.0	24.4	10.8	13.0	2.7	12.0	24.0	Q1
SN74BCT541ANSR	SO	NS	20	2000	330.0	24.4	8.2	13.0	2.5	12.0	24.0	Q1

TAPE AND REEL BOX DIMENSIONS

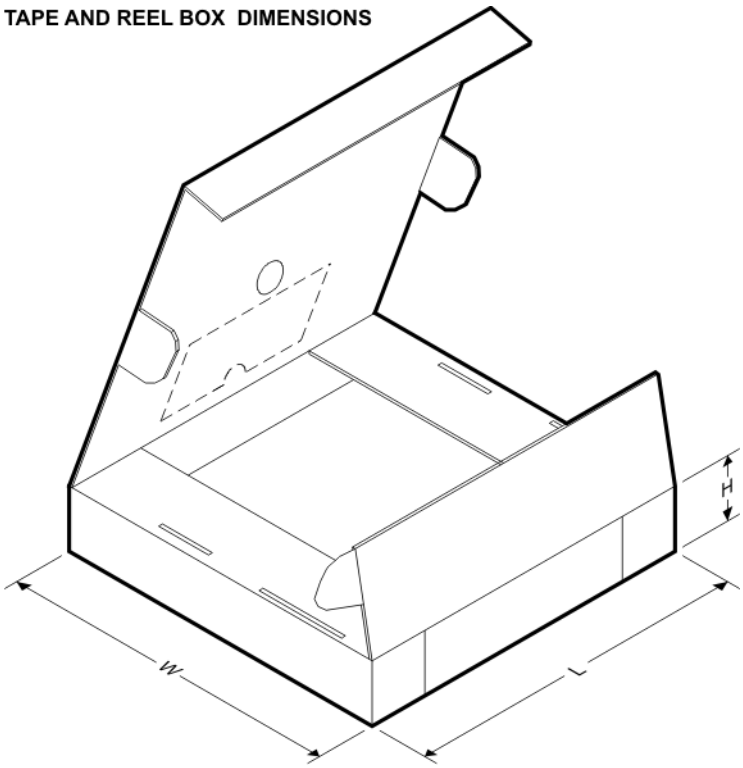

*All dimensions are nominal

Device	Package Type	Package Drawing	Pins	SPQ	Length (mm)	Width (mm)	Height (mm)
SN74BCT541ADWR	SOIC	DW	20	2000	346.0	346.0	41.0
SN74BCT541ANSR	SO	NS	20	2000	346.0	346.0	41.0

FK (S-CQCC-N**)

LEADLESS CERAMIC CHIP CARRIER

28 TERMINAL SHOWN

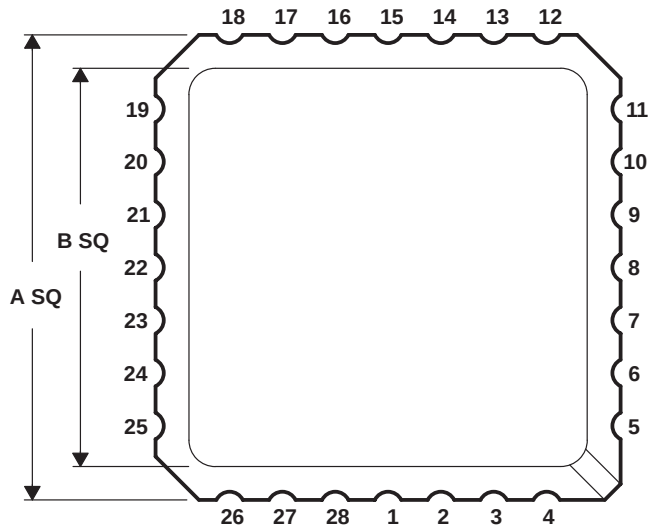

NO. OF TERMINALS **	A		B	
	MIN	MAX	MIN	MAX
20	0.342 (8,69)	0.358 (9,09)	0.307 (7,80)	0.358 (9,09)
28	0.442 (11,23)	0.458 (11,63)	0.406 (10,31)	0.458 (11,63)
44	0.640 (16,26)	0.660 (16,76)	0.495 (12,58)	0.560 (14,22)
52	0.739 (18,78)	0.761 (19,32)	0.495 (12,58)	0.560 (14,22)
68	0.938 (23,83)	0.962 (24,43)	0.850 (21,6)	0.858 (21,8)
84	1.141 (28,99)	1.165 (29,59)	1.047 (26,6)	1.063 (27,0)

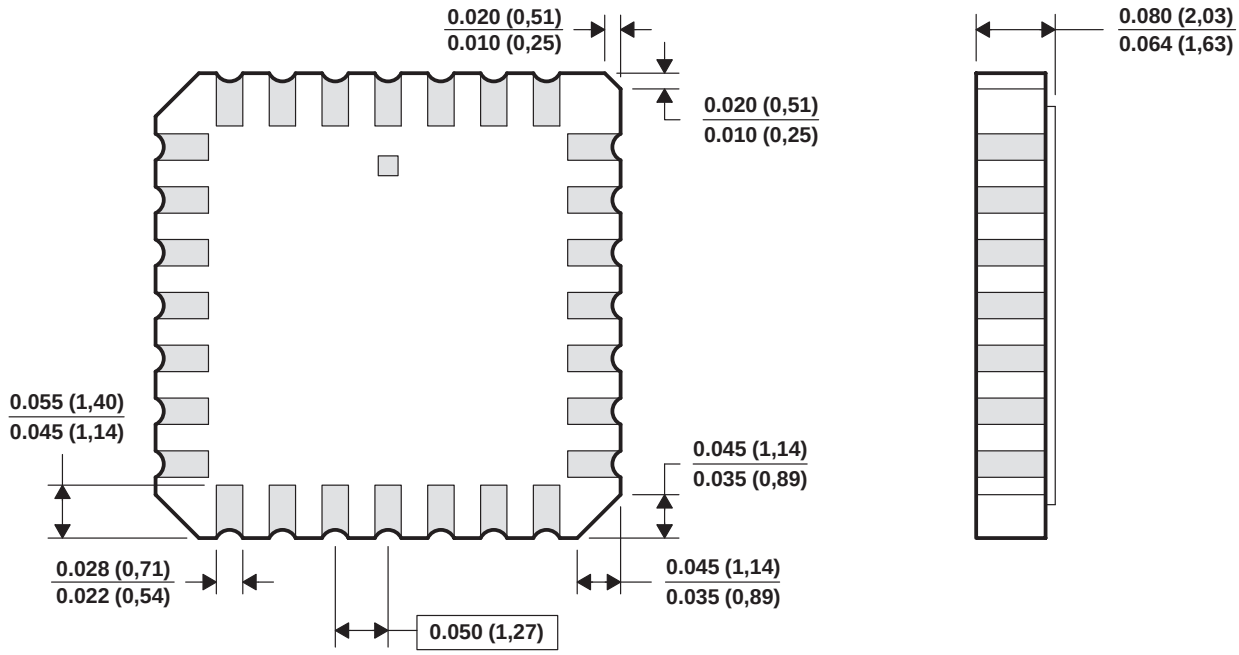

4040140/D 10/96

NOTES:
A. All linear dimensions are in inches (millimeters).
B. This drawing is subject to change without notice.
C. This package can be hermetically sealed with a metal lid.
D. The terminals are gold plated.
E. Falls within JEDEC MS-004

MECHANICAL DATA

NS (R-PDSO-G)** **PLASTIC SMALL-OUTLINE PACKAGE**

14-PINS SHOWN

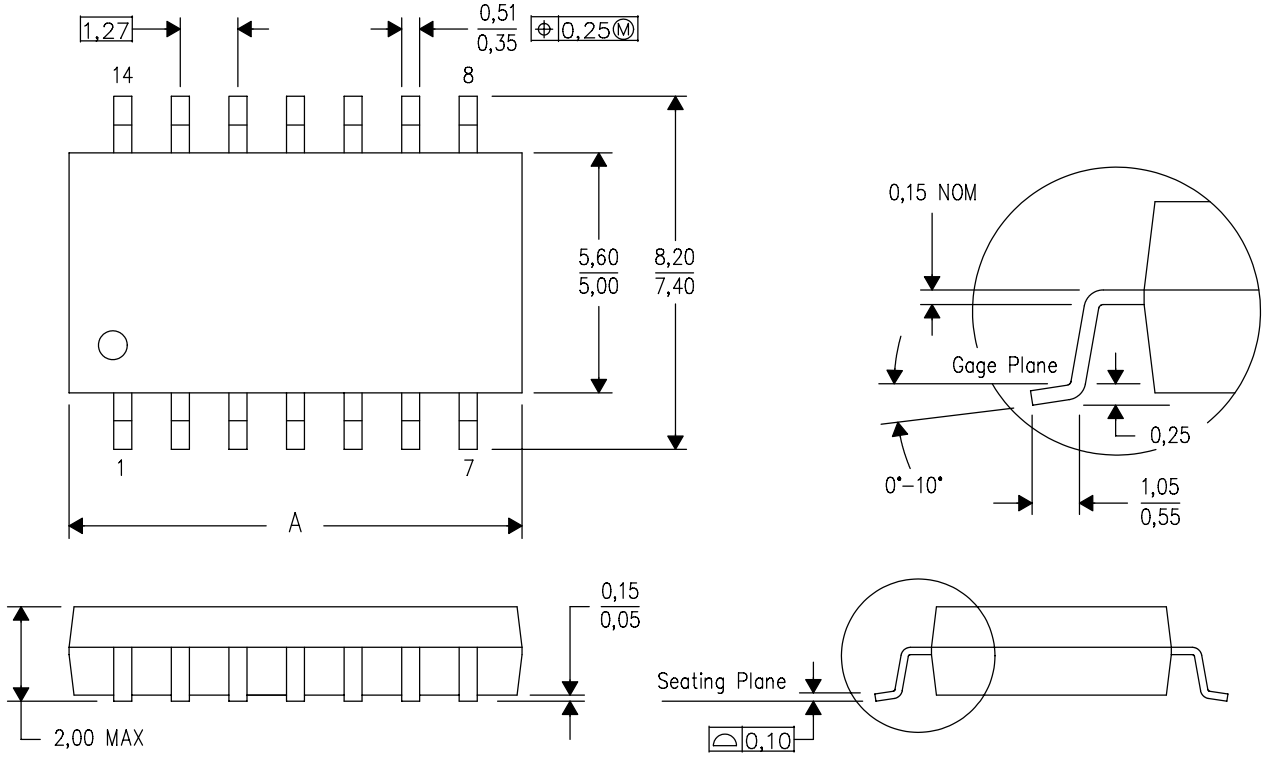

DIM \ PINS **	14	16	20	24
A MAX	10,50	10,50	12,90	15,30
A MIN	9,90	9,90	12,30	14,70

4040062/C 03/03

NOTES:
A. All linear dimensions are in millimeters.
B. This drawing is subject to change without notice.
C. Body dimensions do not include mold flash or protrusion, not to exceed 0,15.

J (R–GDIP–T**) CERAMIC DUAL IN–LINE PACKAGE

14 LEADS SHOWN

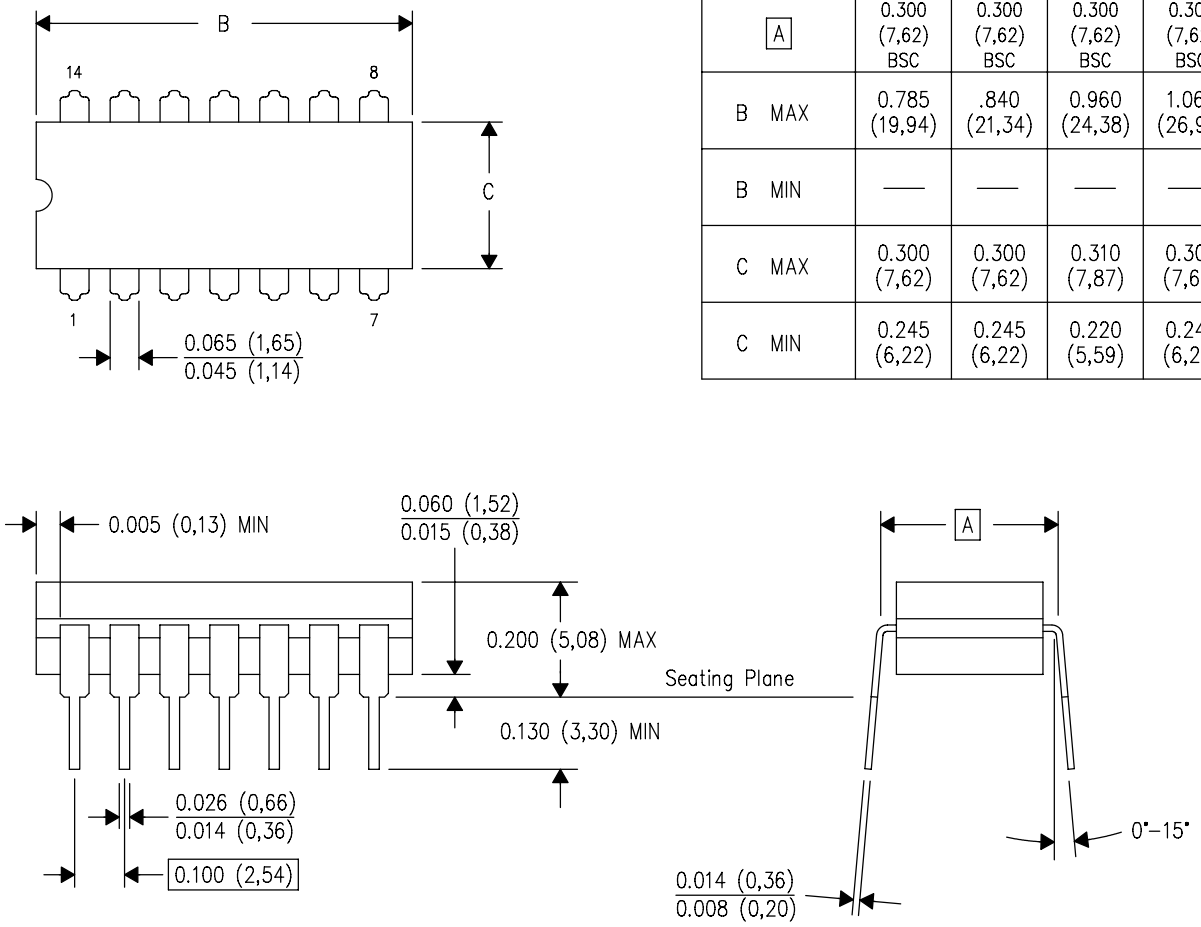

DIM \ PINS **	14	16	18	20
A	0.300 (7,62) BSC	0.300 (7,62) BSC	0.300 (7,62) BSC	0.300 (7,62) BSC
B MAX	0.785 (19,94)	.840 (21,34)	0.960 (24,38)	1.060 (26,92)
B MIN	—	—	—	—
C MAX	0.300 (7,62)	0.300 (7,62)	0.310 (7,87)	0.300 (7,62)
C MIN	0.245 (6,22)	0.245 (6,22)	0.220 (5,59)	0.245 (6,22)

4040083/F 03/03

NOTES:
- A. All linear dimensions are in inches (millimeters).
- B. This drawing is subject to change without notice.
- C. This package is hermetically sealed with a ceramic lid using glass frit.
- D. Index point is provided on cap for terminal identification only on press ceramic glass frit seal only.
- E. Falls within MIL STD 1835 GDIP1–T14, GDIP1–T16, GDIP1–T18 and GDIP1–T20.

W (R–GDFP–F20) CERAMIC DUAL FLATPACK

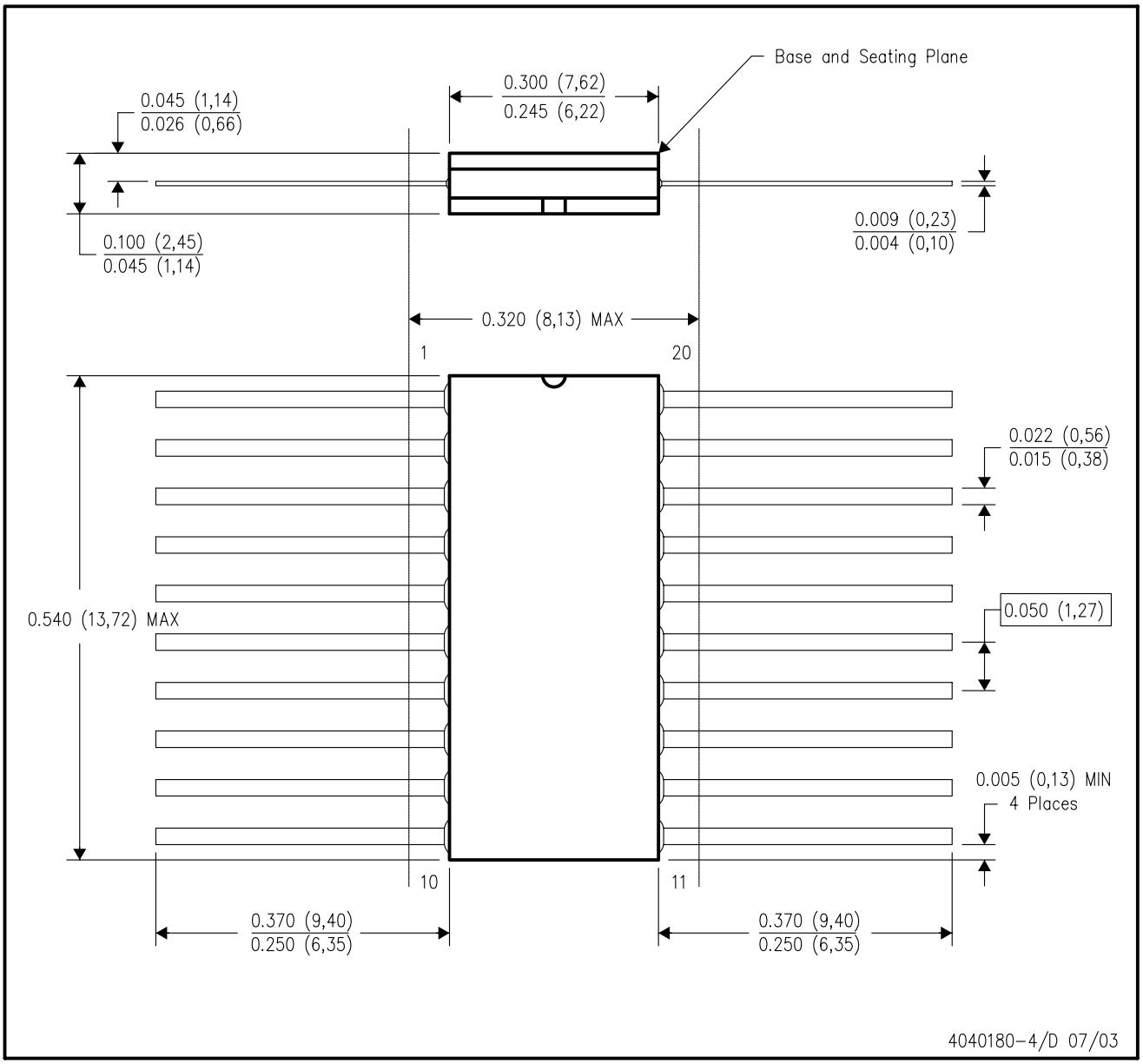

NOTES:
A. All linear dimensions are in inches (millimeters).
B. This drawing is subject to change without notice.
C. This package can be hermetically sealed with a ceramic lid using glass frit.
D. Index point is provided on cap for terminal identification only.
E. Falls within Mil–Std 1835 GDFP2–F20

DW (R–PDSO–G20) PLASTIC SMALL–OUTLINE PACKAGE

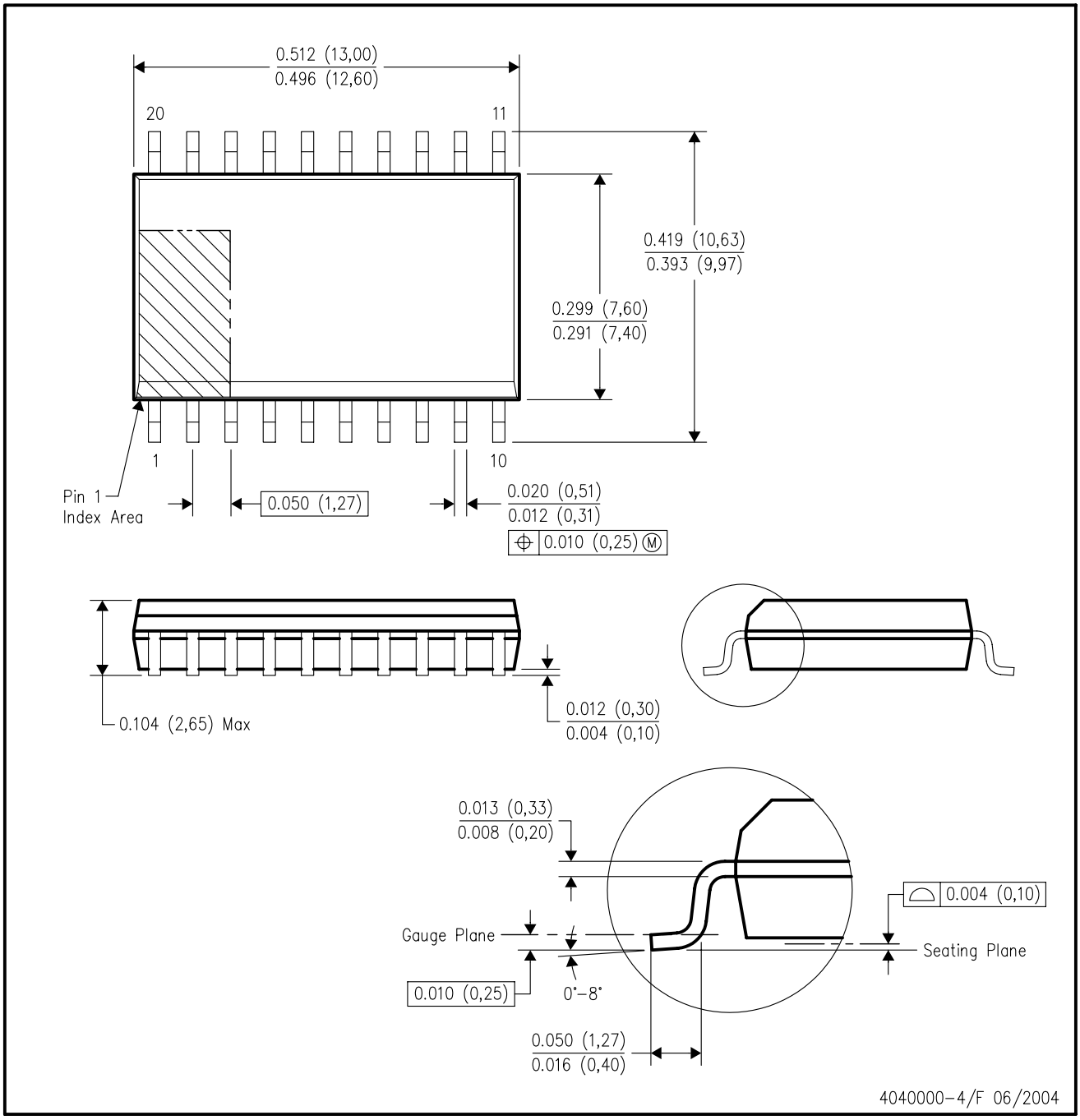

NOTES:
A. All linear dimensions are in inches (millimeters).
B. This drawing is subject to change without notice.
C. Body dimensions do not include mold flash or protrusion not to exceed 0.006 (0,15).
D. Falls within JEDEC MS–013 variation AC.

N (R–PDIP–T**) PLASTIC DUAL–IN–LINE PACKAGE

16 PINS SHOWN

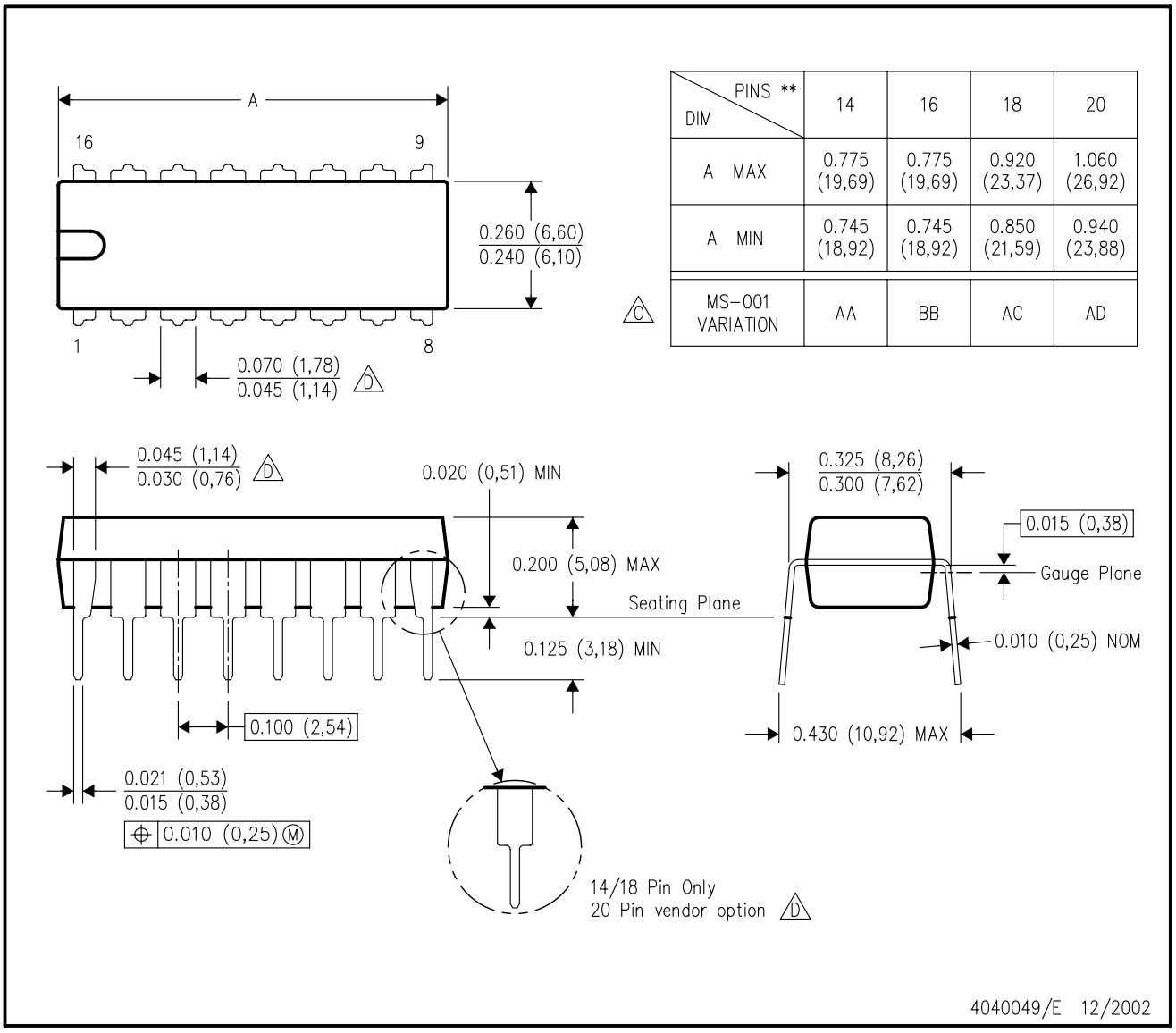

DIM \ PINS **	14	16	18	20
A MAX	0.775 (19,69)	0.775 (19,69)	0.920 (23,37)	1.060 (26,92)
A MIN	0.745 (18,92)	0.745 (18,92)	0.850 (21,59)	0.940 (23,88)
MS–001 VARIATION (C)	AA	BB	AC	AD

NOTES:
A. All linear dimensions are in inches (millimeters).
B. This drawing is subject to change without notice.
C. Falls within JEDEC MS–001, except 18 and 20 pin minimum body length (Dim A).
D. The 20 pin end lead shoulder width is a vendor option, either half or full width.

PACKAGING INFORMATION

Orderable Device	Status (1)	Package Type	Package Drawing	Pins	Package Qty	Eco Plan (2)	Lead finish/ Ball material (6)	MSL Peak Temp (3)	Op Temp (°C)	Device Marking (4/5)	Samples
5962-9074901M2A	ACTIVE	LCCC	FK	20	1	Non-RoHS & Green	SNPB	N / A for Pkg Type	-55 to 125	5962-9074901M2A SNJ54BCT541FK	Samples
5962-9074901MRA	ACTIVE	CDIP	J	20	1	Non-RoHS & Green	SNPB	N / A for Pkg Type	-55 to 125	5962-9074901MRA SNJ54BCT541J	Samples
SN74BCT541ADW	ACTIVE	SOIC	DW	20	25	RoHS & Green	NIPDAU	Level-1-260C-UNLIM	0 to 70	BCT541A	Samples
SN74BCT541ADWR	ACTIVE	SOIC	DW	20	2000	RoHS & Green	NIPDAU	Level-1-260C-UNLIM	0 to 70	BCT541A	Samples
SN74BCT541AN	ACTIVE	PDIP	N	20	20	RoHS & Non-Green	NIPDAU	N / A for Pkg Type	0 to 70	SN74BCT541AN	Samples
SN74BCT541ANSR	ACTIVE	SO	NS	20	2000	RoHS & Green	NIPDAU	Level-1-260C-UNLIM	0 to 70	BCT541A	Samples
SNJ54BCT541FK	ACTIVE	LCCC	FK	20	1	Non-RoHS & Green	SNPB	N / A for Pkg Type	-55 to 125	5962-9074901M2A SNJ54BCT541FK	Samples
SNJ54BCT541J	ACTIVE	CDIP	J	20	1	Non-RoHS & Green	SNPB	N / A for Pkg Type	-55 to 125	5962-9074901MRA SNJ54BCT541J	Samples

(1) The marketing status values are defined as follows:
ACTIVE: Product device recommended for new designs.
LIFEBUY: TI has announced that the device will be discontinued, and a lifetime-buy period is in effect.
NRND: Not recommended for new designs. Device is in production to support existing customers, but TI does not recommend using this part in a new design.
PREVIEW: Device has been announced but is not in production. Samples may or may not be available.
OBSOLETE: TI has discontinued the production of the device.

(2) **RoHS:** TI defines "RoHS" to mean semiconductor products that are compliant with the current EU RoHS requirements for all 10 RoHS substances, including the requirement that RoHS substance do not exceed 0.1% by weight in homogeneous materials. Where designed to be soldered at high temperatures, "RoHS" products are suitable for use in specified lead-free processes. TI may reference these types of products as "Pb-Free".
RoHS Exempt: TI defines "RoHS Exempt" to mean products that contain lead but are compliant with EU RoHS pursuant to a specific EU RoHS exemption.
Green: TI defines "Green" to mean the content of Chlorine (Cl) and Bromine (Br) based flame retardants meet JS709B low halogen requirements of <=1000ppm threshold. Antimony trioxide based flame retardants must also meet the <=1000ppm threshold requirement.

(3) MSL, Peak Temp. - The Moisture Sensitivity Level rating according to the JEDEC industry standard classifications, and peak solder temperature.

(4) There may be additional marking, which relates to the logo, the lot trace code information, or the environmental category on the device.

(5) Multiple Device Markings will be inside parentheses. Only one Device Marking contained in parentheses and separated by a "~" will appear on a device. If a line is indented then it is a continuation of the previous line and the two combined represent the entire Device Marking for that device.

(6) Lead finish/Ball material - Orderable Devices may have multiple material finish options. Finish options are separated by a vertical ruled line. Lead finish/Ball material values may wrap to two lines if the finish value exceeds the maximum column width.

Important Information and Disclaimer: The information provided on this page represents TI's knowledge and belief as of the date that it is provided. TI bases its knowledge and belief on information provided by third parties, and makes no representation or warranty as to the accuracy of such information. Efforts are underway to better integrate information from third parties. TI has taken and continues to take reasonable steps to provide representative and accurate information but may not have conducted destructive testing or chemical analysis on incoming materials and chemicals. TI and TI suppliers consider certain information to be proprietary, and thus CAS numbers and other limited information may not be available for release.

In no event shall TI's liability arising out of such information exceed the total purchase price of the TI part(s) at issue in this document sold by TI to Customer on an annual basis.

TAPE AND REEL INFORMATION

REEL DIMENSIONS

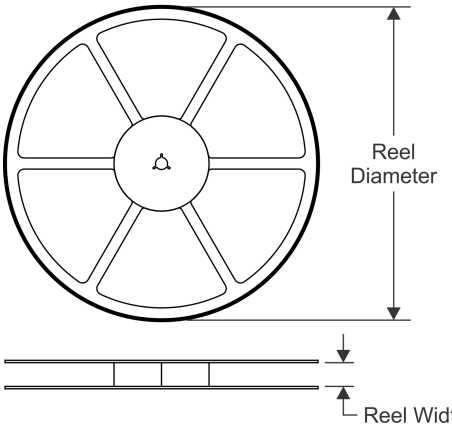

TAPE DIMENSIONS

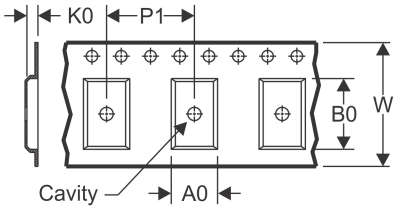

A0	Dimension designed to accommodate the component width
B0	Dimension designed to accommodate the component length
K0	Dimension designed to accommodate the component thickness
W	Overall width of the carrier tape
P1	Pitch between successive cavity centers

QUADRANT ASSIGNMENTS FOR PIN 1 ORIENTATION IN TAPE

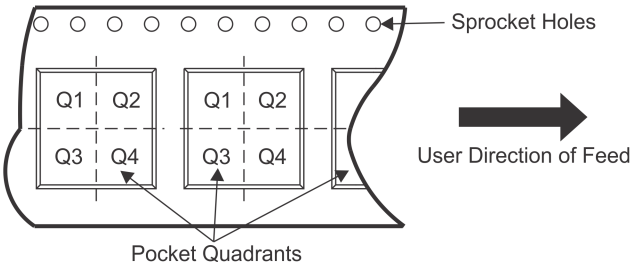

*All dimensions are nominal

Device	Package Type	Package Drawing	Pins	SPQ	Reel Diameter (mm)	Reel Width W1 (mm)	A0 (mm)	B0 (mm)	K0 (mm)	P1 (mm)	W (mm)	Pin1 Quadrant
SN74BCT541ADWR	SOIC	DW	20	2000	330.0	24.4	10.8	13.3	2.7	12.0	24.0	Q1
SN74BCT541ANSR	SO	NS	20	2000	330.0	24.4	8.4	13.0	2.5	12.0	24.0	Q1

TAPE AND REEL BOX DIMENSIONS

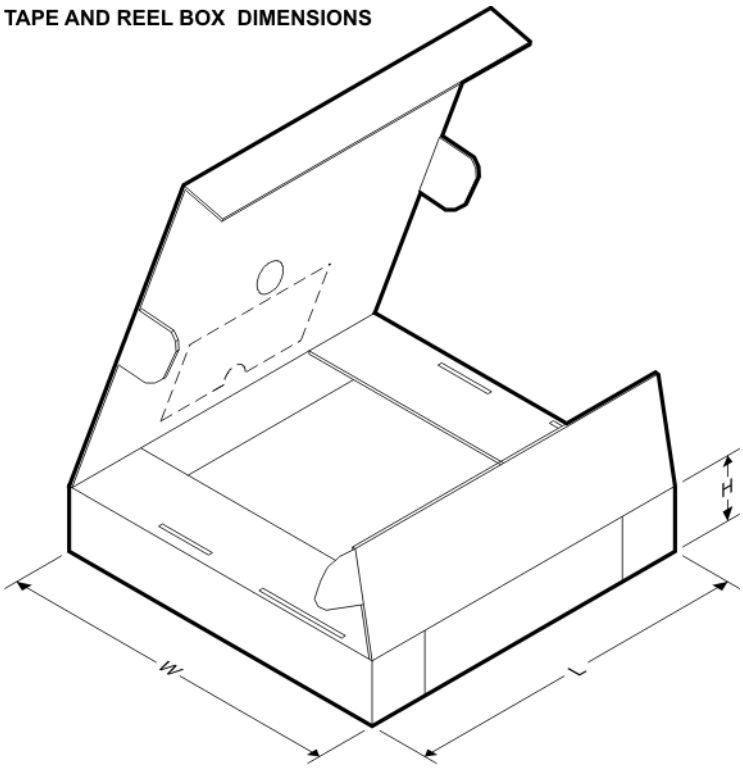

*All dimensions are nominal

Device	Package Type	Package Drawing	Pins	SPQ	Length (mm)	Width (mm)	Height (mm)
SN74BCT541ADWR	SOIC	DW	20	2000	367.0	367.0	45.0
SN74BCT541ANSR	SO	NS	20	2000	367.0	367.0	45.0

TUBE

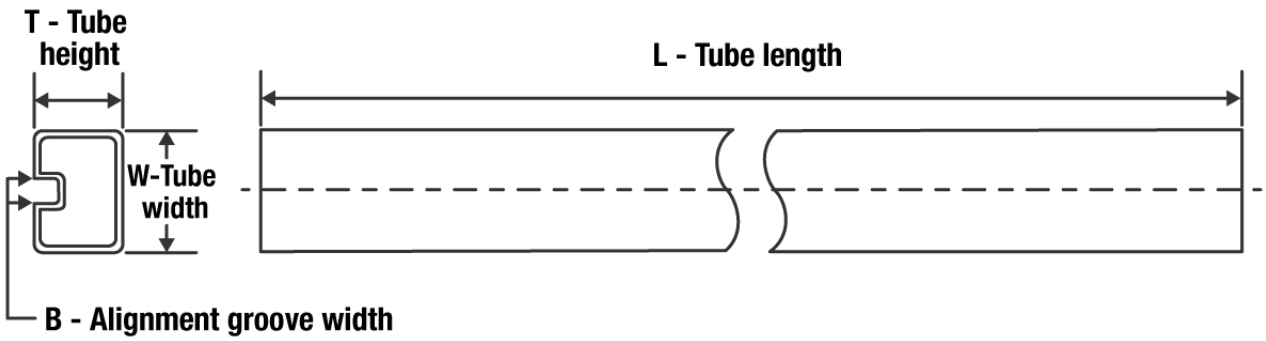

*All dimensions are nominal

Device	Package Name	Package Type	Pins	SPQ	L (mm)	W (mm)	T (µm)	B (mm)
5962-9074901M2A	FK	LCCC	20	1	506.98	12.06	2030	NA
SN74BCT541ADW	DW	SOIC	20	25	507	12.83	5080	6.6
SN74BCT541AN	N	PDIP	20	20	506	13.97	11230	4.32
SNJ54BCT541FK	FK	LCCC	20	1	506.98	12.06	2030	NA

J (R–GDIP–T**) CERAMIC DUAL IN–LINE PACKAGE

14 LEADS SHOWN

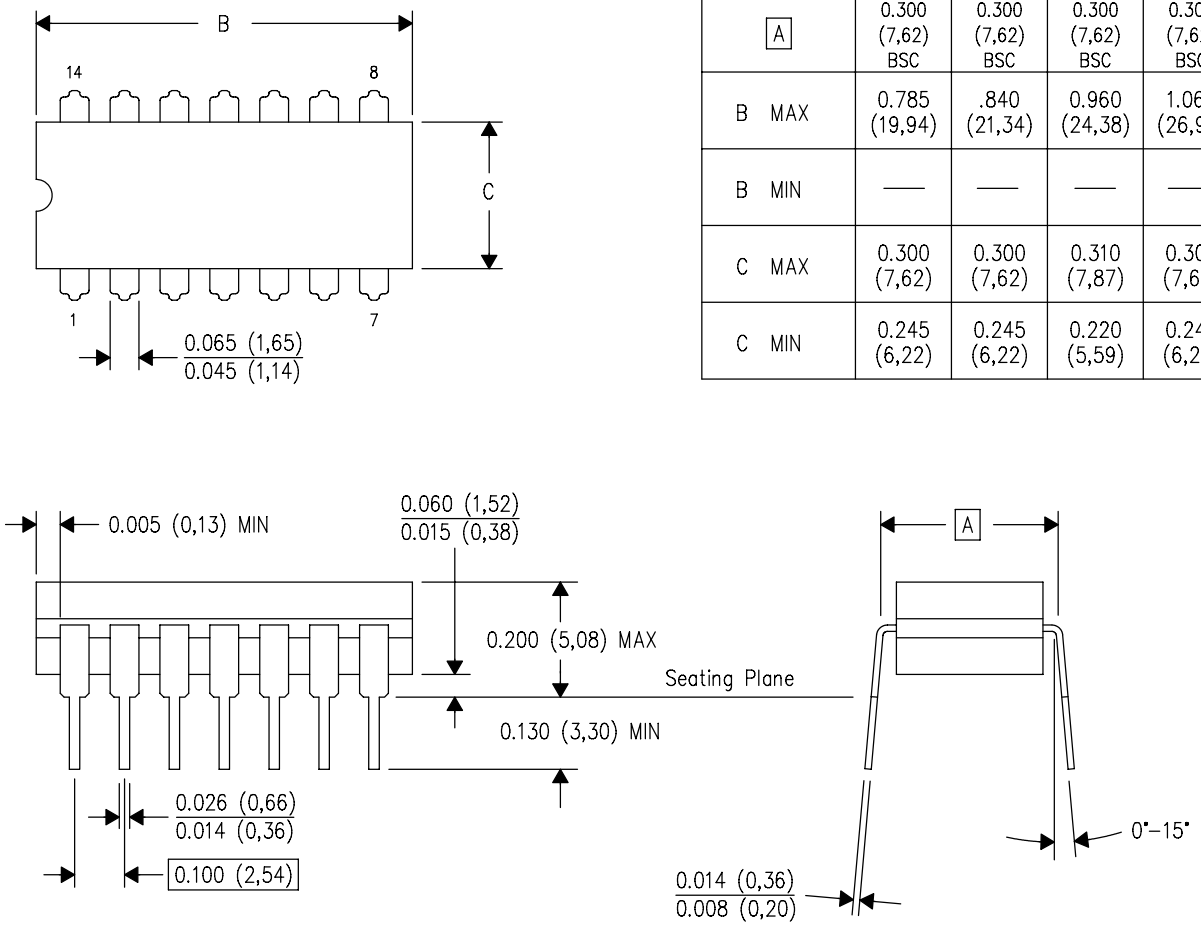

DIM \ PINS **	14	16	18	20
A	0.300 (7,62) BSC	0.300 (7,62) BSC	0.300 (7,62) BSC	0.300 (7,62) BSC
B MAX	0.785 (19,94)	.840 (21,34)	0.960 (24,38)	1.060 (26,92)
B MIN	—	—	—	—
C MAX	0.300 (7,62)	0.300 (7,62)	0.310 (7,87)	0.300 (7,62)
C MIN	0.245 (6,22)	0.245 (6,22)	0.220 (5,59)	0.245 (6,22)

4040083/F 03/03

NOTES:
- A. All linear dimensions are in inches (millimeters).
- B. This drawing is subject to change without notice.
- C. This package is hermetically sealed with a ceramic lid using glass frit.
- D. Index point is provided on cap for terminal identification only on press ceramic glass frit seal only.
- E. Falls within MIL STD 1835 GDIP1–T14, GDIP1–T16, GDIP1–T18 and GDIP1–T20.

N (R–PDIP–T**) PLASTIC DUAL–IN–LINE PACKAGE

16 PINS SHOWN

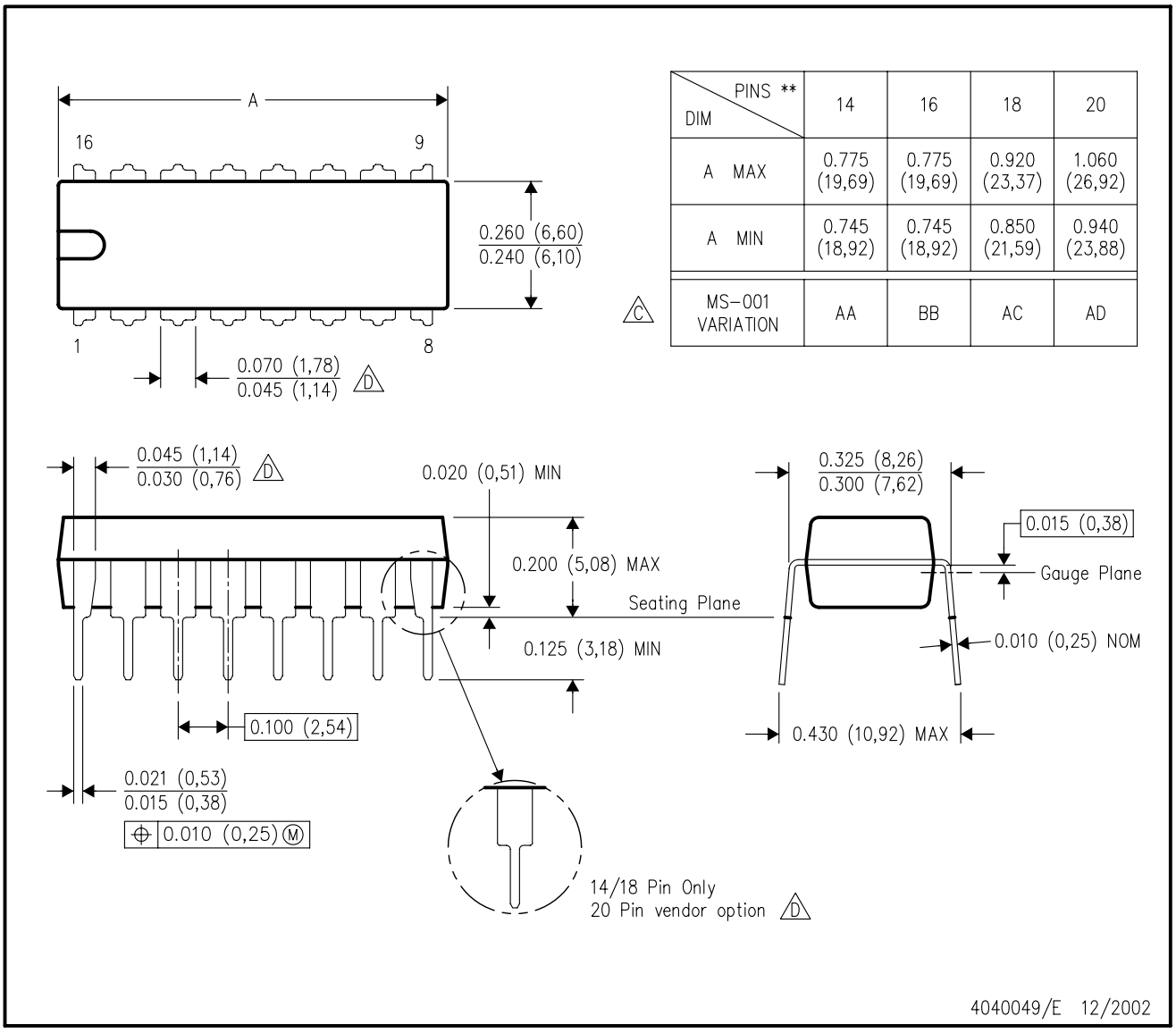

DIM \ PINS **	14	16	18	20
A MAX	0.775 (19,69)	0.775 (19,69)	0.920 (23,37)	1.060 (26,92)
A MIN	0.745 (18,92)	0.745 (18,92)	0.850 (21,59)	0.940 (23,88)
MS–001 VARIATION (C)	AA	BB	AC	AD

NOTES:
A. All linear dimensions are in inches (millimeters).
B. This drawing is subject to change without notice.
C. Falls within JEDEC MS–001, except 18 and 20 pin minimum body length (Dim A).
D. The 20 pin end lead shoulder width is a vendor option, either half or full width.

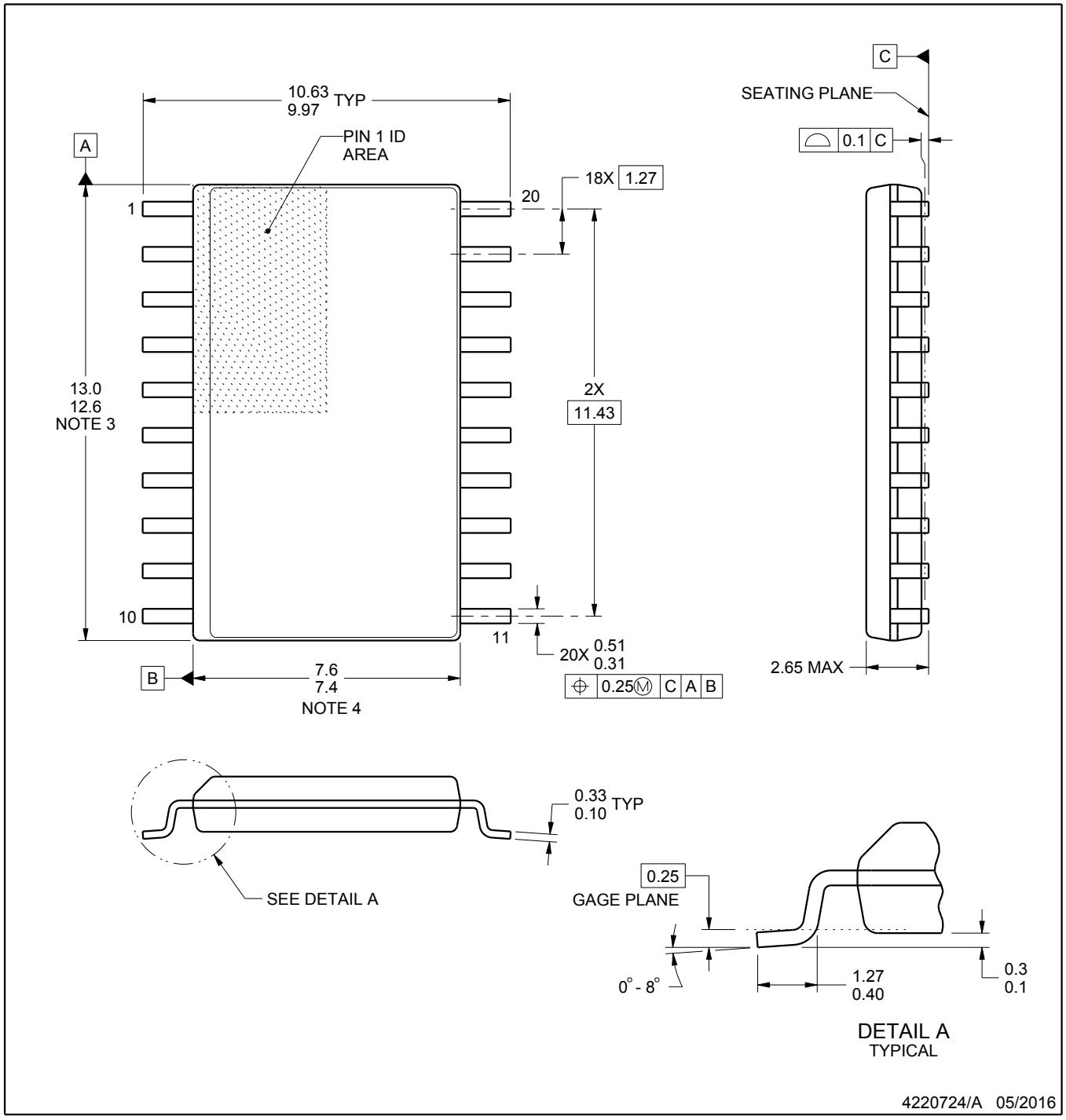

NOTES:

1. All linear dimensions are in millimeters. Dimensions in parenthesis are for reference only. Dimensioning and tolerancing per ASME Y14.5M.
2. This drawing is subject to change without notice.
3. This dimension does not include mold flash, protrusions, or gate burrs. Mold flash, protrusions, or gate burrs shall not exceed 0.15 mm per side.
4. This dimension does not include interlead flash. Interlead flash shall not exceed 0.43 mm per side.
5. Reference JEDEC registration MS-013.

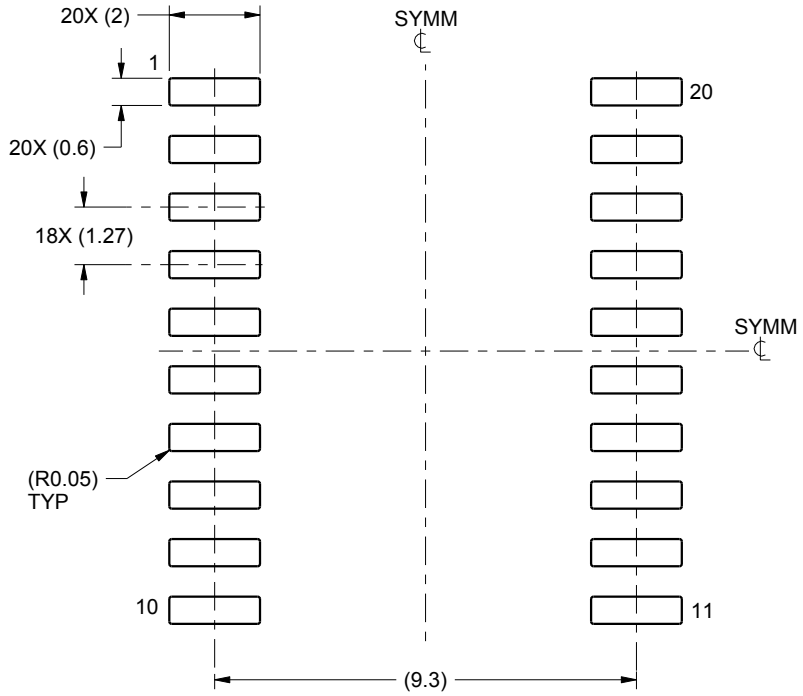

LAND PATTERN EXAMPLE
SCALE:6X

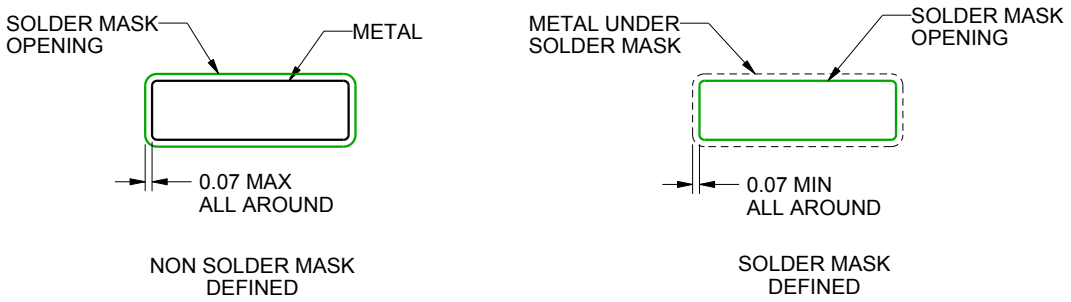

SOLDER MASK DETAILS

4220724/A 05/2016

NOTES: (continued)

6. Publication IPC-7351 may have alternate designs.
7. Solder mask tolerances between and around signal pads can vary based on board fabrication site.

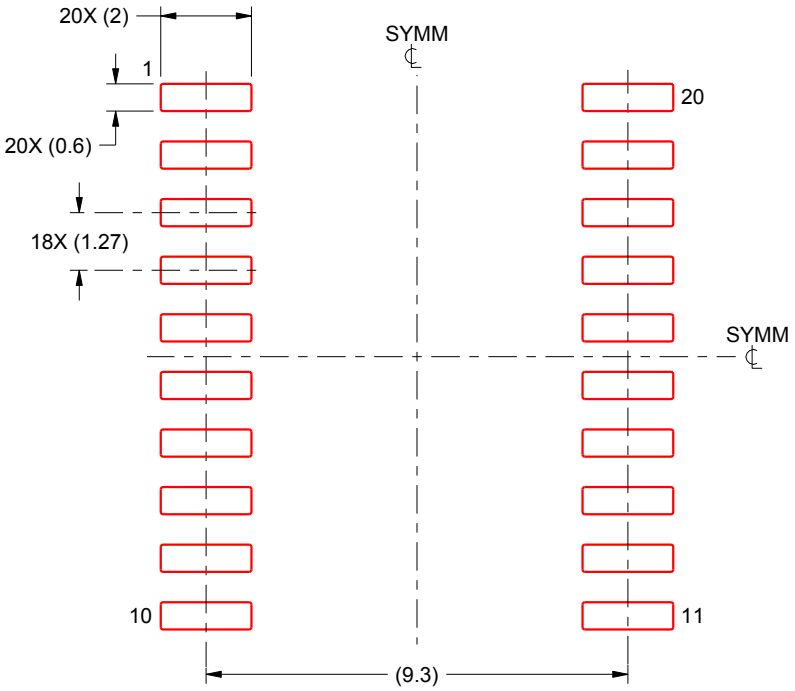

SOLDER PASTE EXAMPLE
BASED ON 0.125 mm THICK STENCIL
SCALE:6X

4220724/A 05/2016

NOTES: (continued)

8. Laser cutting apertures with trapezoidal walls and rounded corners may offer better paste release. IPC-7525 may have alternate design recommendations.
9. Board assembly site may have different recommendations for stencil design.

FK (S–CQCC–N**) LEADLESS CERAMIC CHIP CARRIER

28 TERMINAL SHOWN

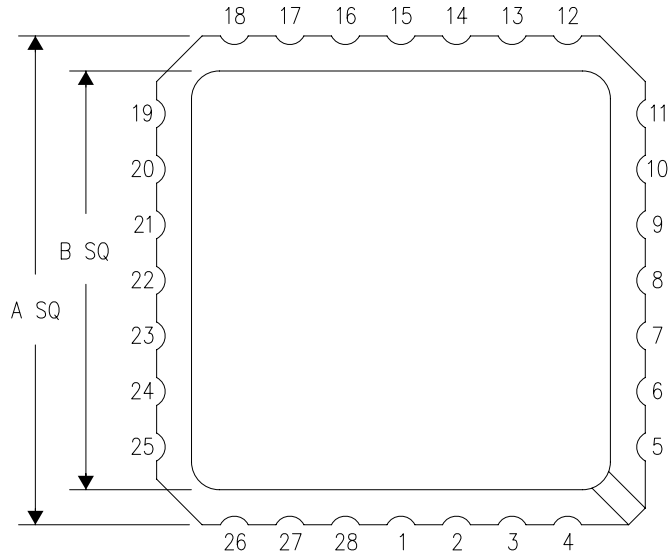

NO. OF TERMINALS **	A		B	
	MIN	MAX	MIN	MAX
20	0.342 (8,69)	0.358 (9,09)	0.307 (7,80)	0.358 (9,09)
28	0.442 (11,23)	0.458 (11,63)	0.406 (10,31)	0.458 (11,63)
44	0.640 (16,26)	0.660 (16,76)	0.495 (12,58)	0.560 (14,22)
52	0.740 (18,78)	0.761 (19,32)	0.495 (12,58)	0.560 (14,22)
68	0.938 (23,83)	0.962 (24,43)	0.850 (21,6)	0.858 (21,8)
84	1.141 (28,99)	1.165 (29,59)	1.047 (26,6)	1.063 (27,0)

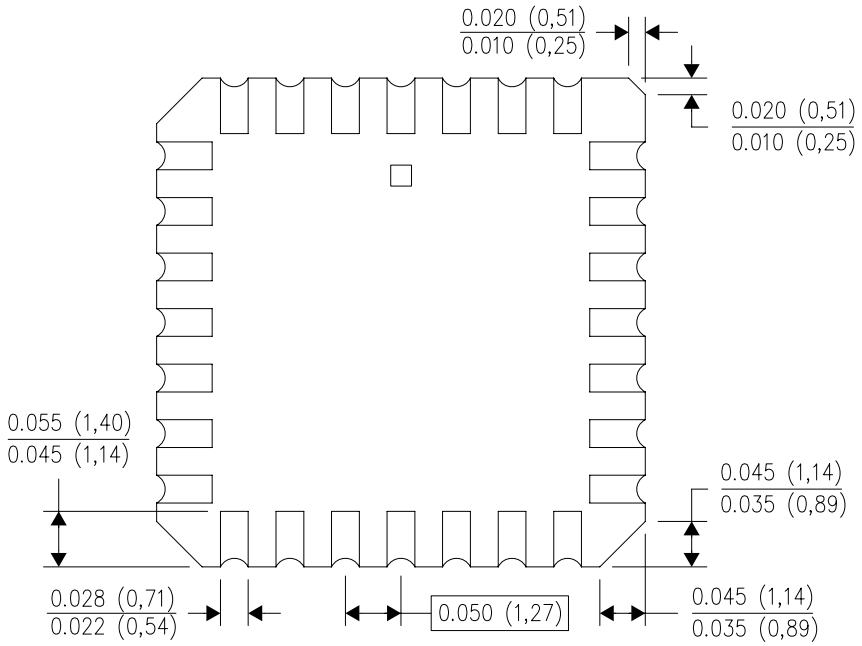

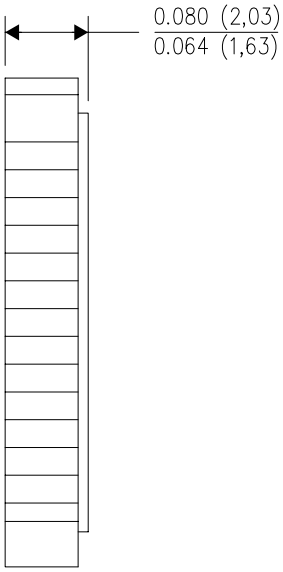

4040140/D 01/11

NOTES:
A. All linear dimensions are in inches (millimeters).
B. This drawing is subject to change without notice.
C. This package can be hermetically sealed with a metal lid.
D. Falls within JEDEC MS–004

MECHANICAL DATA

NS (R-PDSO-G)** **PLASTIC SMALL-OUTLINE PACKAGE**

14-PINS SHOWN

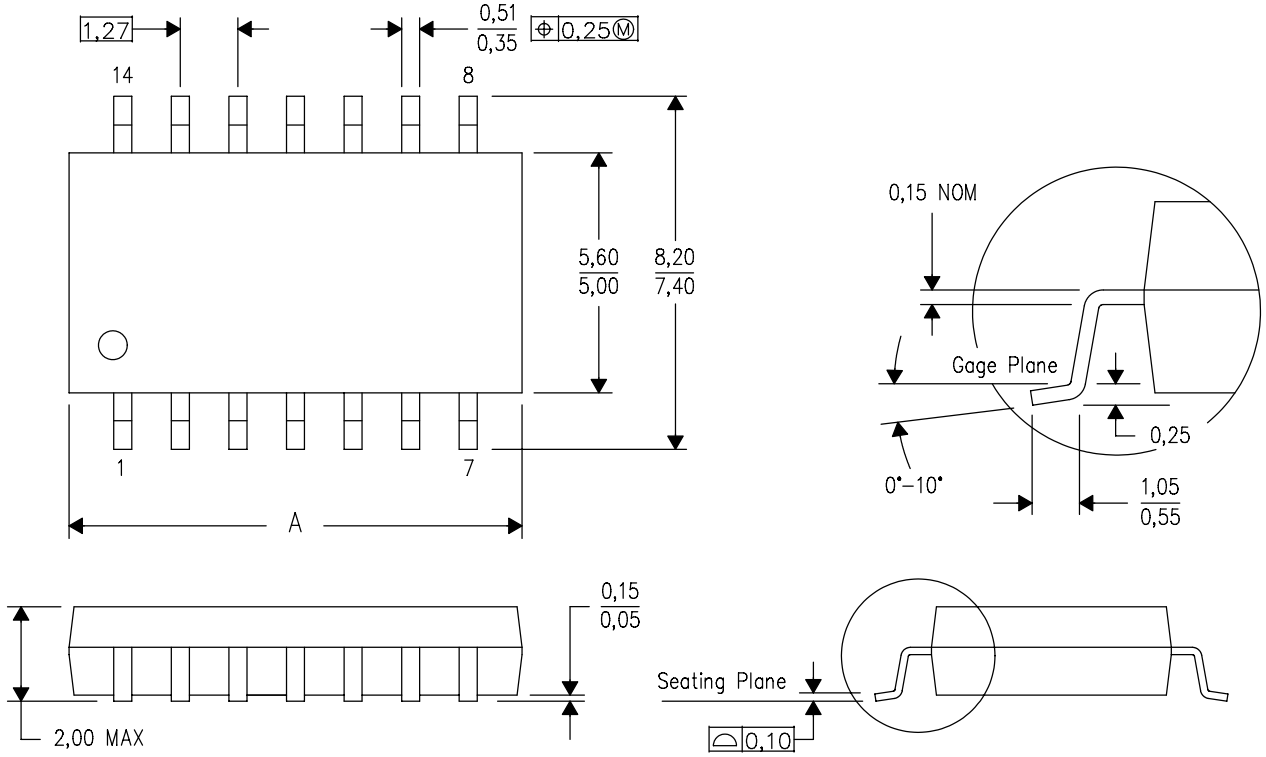

DIM \ PINS **	14	16	20	24
A MAX	10,50	10,50	12,90	15,30
A MIN	9,90	9,90	12,30	14,70

4040062/C 03/03

NOTES:
A. All linear dimensions are in millimeters.
B. This drawing is subject to change without notice.
C. Body dimensions do not include mold flash or protrusion, not to exceed 0,15.

IMPORTANT NOTICE AND DISCLAIMER

TI PROVIDES TECHNICAL AND RELIABILITY DATA (INCLUDING DATA SHEETS), DESIGN RESOURCES (INCLUDING REFERENCE DESIGNS), APPLICATION OR OTHER DESIGN ADVICE, WEB TOOLS, SAFETY INFORMATION, AND OTHER RESOURCES “AS IS” AND WITH ALL FAULTS, AND DISCLAIMS ALL WARRANTIES, EXPRESS AND IMPLIED, INCLUDING WITHOUT LIMITATION ANY IMPLIED WARRANTIES OF MERCHANTABILITY, FITNESS FOR A PARTICULAR PURPOSE OR NON-INFRINGEMENT OF THIRD PARTY INTELLECTUAL PROPERTY RIGHTS.

These resources are intended for skilled developers designing with TI products. You are solely responsible for (1) selecting the appropriate TI products for your application, (2) designing, validating and testing your application, and (3) ensuring your application meets applicable standards, and any other safety, security, regulatory or other requirements.

These resources are subject to change without notice. TI grants you permission to use these resources only for development of an application that uses the TI products described in the resource. Other reproduction and display of these resources is prohibited. No license is granted to any other TI intellectual property right or to any third party intellectual property right. TI disclaims responsibility for, and you will fully indemnify TI and its representatives against, any claims, damages, costs, losses, and liabilities arising out of your use of these resources.

TI’s products are provided subject to TI’s Terms of Sale or other applicable terms available either on ti.com or provided in conjunction with such TI products. TI’s provision of these resources does not expand or otherwise alter TI’s applicable warranties or warranty disclaimers for TI products.

TI objects to and rejects any additional or different terms you may have proposed.

Mailing Address: Texas Instruments, Post Office Box 655303, Dallas, Texas 75265
Copyright © 2022, Texas Instruments Incorporated