SNx4HC112 Dual J-K Negative-Edge-Triggered Flip-Flops With Clear and Preset

1 Features

- Wide operating voltage range of 2 V to 6 V
- Outputs can drive up to 10 LSTTL loads
- Low power consumption, 40-μA max I_{CC}
- Typical t_{pd} = 13 ns
- ±4-mA output drive at 5 V
- Low input current of 1 μA max

2 Description

The ’HC112 devices contain two independent J-K negative-edge-triggered flip-flops. A low level at the preset ($\overline{PRE}$) or clear ($\overline{CLR}$) inputs sets or resets the outputs, regardless of the levels of the other inputs. When $\overline{PRE}$ and $\overline{CLR}$ are inactive (high), data at the J and K inputs meeting the setup time requirements are transferred to the outputs on the negative-going edge of the clock (CLK) pulse. Clock triggering occurs at a voltage level and is not directly related to the fall time of the CLK pulse. Following the hold-time interval, data at the J and K inputs may be changed without affecting the levels at the outputs. These versatile flip-flops perform as toggle flip-flops by tying J and K high.

Device Information

PART NUMBER	PACKAGE[1]	BODY SIZE (NOM)
SN54HC112J	CDIP (16)	24.38 mm × 6.92 mm
SN74HC112D	SOIC (16)	9.90 mm × 3.90 mm
SN74HC112N	PDIP (16)	19.31 mm × 6.35 mm
SN54HC112FK	LCCC (20)	8.89 mm × 8.45 mm
SN54HC112W	CFP (16)	10.16 mm × 6.73 mm

(1) For all available packages, see the orderable addendum at the end of the data sheet.

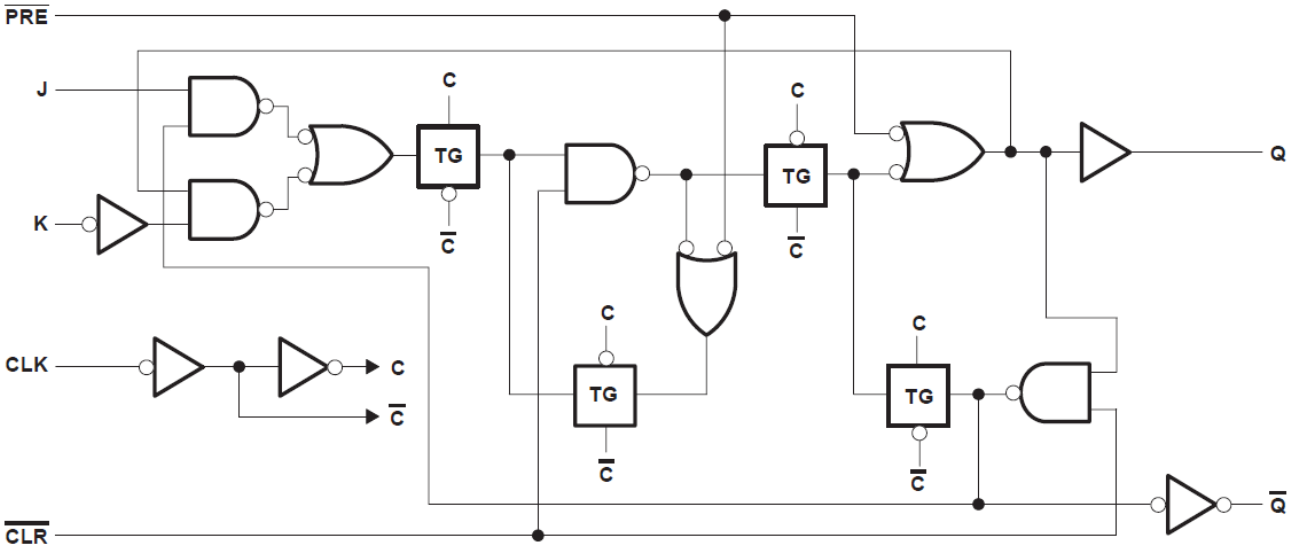

Functional Block Diagram

An IMPORTANT NOTICE at the end of this data sheet addresses availability, warranty, changes, use in safety-critical applications, intellectual property matters and other important disclaimers. PRODUCTION DATA.

Table of Contents

1 Features....1
2 Description....1
3 Revision History....2
4 Pin Configuration and Functions....3
5 Specifications....4
5.1 Absolute Maximum Ratings....4
5.2 Recommended Operating Conditions[2]....4
5.3 Thermal Information....4
5.4 Electrical Characteristics....5
5.5 Timing Requirements....5
5.6 Switching Characteristics....6
5.7 Operating Characteristics....6
6 Parameter Measurement Information....7
7 Detailed Description....8
7.1 Overview....8
7.2 Functional Block Diagram....8
7.3 Device Functional Modes....8
8 Power Supply Recommendations....9
9 Layout....9
9.1 Layout Guidelines....9
10 Device and Documentation Support....10
10.1 Receiving Notification of Documentation Updates....10
10.2 Support Resources....10
10.3 Trademarks....10
10.4 Electrostatic Discharge Caution....10
10.5 Glossary....10
11 Mechanical, Packaging, and Orderable Information....10

3 Revision History

NOTE: Page numbers for previous revisions may differ from page numbers in the current version.

Changes from Revision F (September 2003) to Revision G (February 2022)	Page
• Updated the numbering, formatting, tables, figures, and cross-references throughout the document to reflect modern data sheet standards	1

Copyright © 2022 Texas Instruments Incorporated

4 Pin Configuration and Functions

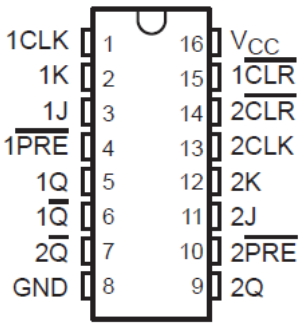

J, D, N, W package
16-Pin CDIP, SOIC, PDIP, CFP
Top View

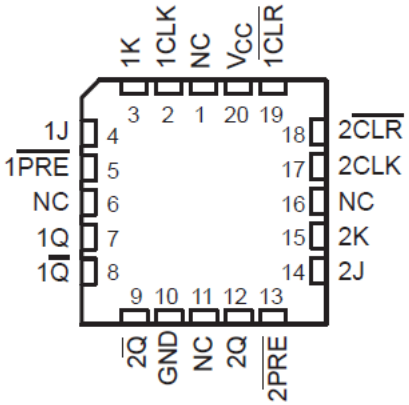

NC − No internal connection

FK Package
20-Pin LCCC
Top View

5 Specifications

5.1 Absolute Maximum Ratings

over operating free-air temperature range[(1)]

			MIN	MAX	UNIT
V_{CC}	Supply voltage range		–0.5	7	mA
I_{IK}	Input clamp current[(2)]	$V_I < 0$ or $V_I > V_{CC}$		±20	mA
I_{OK}	Output clamp current[(2)]	$V_O < 0$ or $V_O > V_{CC}$		±20	mA
I_O	Continuous output current	$V_O = 0$ to V_{CC}		±25	mA
	Continuous current through V_{CC} or GND			±50	mA
T_J	Junction temperature			150	℃
T_{stg}	Storage temperature range		–65	150	℃

(1) Stresses beyond those listed under “absolute maximum ratings” may cause permanent damage to the device. These are stress ratings only, and functional operation of the device at these or any other conditions beyond those indicated under "recommended operating conditions" is not implied. Exposure to absolute-maximum-rated conditions for extended periods may affect device reliability.
(2) The input and output voltage ratings may be exceeded if the input and output current ratings are observed.

5.2 Recommended Operating Conditions[(2)]

			SN54HC112			SN74HC112			UNIT
			MIN	NOM	MAX	MIN	NOM	MAX	
V_{CC}	Supply voltage		2	5	6	2	5	6	V
V_{IH}	High-level input voltage	V_{CC} = 2 V	1.5			1.5			V
		V_{CC} = 4.5 V	3.15			3.15			
		V_{CC} = 6 V	4.2			4.2			
V_{IL}	Low-level input voltage	V_{CC} = 2 V			0.5			0.5	V
		V_{CC} = 4.5 V			1.35			1.35	
		V_{CC} = 6 V			1.8			1.8	
V_I	Input voltage		0		V_{CC}	0		V_{CC}	V
V_O	Output voltage		0		V_{CC}	0		V_{CC}	V
t_t [(1)]	Input transition (rise and fall) time	V_{CC} = 2 V			1000			1000	ns
		V_{CC} = 4.5 V			500			500	
		V_{CC} = 6 V			400			400	
T_A	Operating free-air temperature		−55		125	−40		85	°C

(1) If this device is used in the threshold region (from V_{IL}max = 0.5 V to V_{IH}min = 1.5 V), there is a potential to go into the wrong state from induced grounding, causing double clocking. Operating with the inputs at t_t = 1000 ns and V_{CC} = 2 V does not damage the device; however, functionally, the CLK inputs are not ensured while in the shift, count, or toggle operating modes.
(2) All unused inputs of the device must be held at V_{CC} or GND to ensure proper device operation. Refer to the TI application report, *Implications of Slow or Floating CMOS Inputs*, literature number SCBA004.

5.3 Thermal Information

THERMAL METRIC		D (SOIC) 16 PINS	N (PDIP) 16 PINS	UNIT
$R_{\theta JA}$	Junction-to-ambient thermal resistance[(1)]	73	67	°C/W

(1) For more information about traditional and new thermal metrics, see the *Semiconductor and IC package thermal metrics* application report.

Copyright © 2022 Texas Instruments Incorporated

5.4 Electrical Characteristics

over recommended operating free-air temperature range (unless otherwise noted)

PARAMETER	TEST CONDITIONS		V_{CC}	T_A = 25°C			SN54HC112		SN74HC112		UNIT
				MIN	TYP	MAX	MIN	MAX	MIN	MAX	
V_{OH}	$V_I = V_{IH}$ or V_{IL}	I_{OH} = −20 µA	2 V	1.9	1.998		1.9		1.9		V
			4.5 V	4.4	4.499		4.4		4.4		
			6 V	5.9	5.999		5.9		5.9		
		I_{OH} = −4 mA	4.5 V	3.98	4.3			3.7		3.84	
		I_{OH} = −5.2 mA	6 V	5.48	5.8			5.2		5.34	
V_{OL}	$V_I = V_{IH}$ or V_{IL}	I_{OL} = 20 µA	2 V		0.002	0.1		0.1		0.1	V
			4.5 V		0.001	0.1		0.1		0.1	
			6 V		0.001	0.1		0.1		0.1	
		I_{OL} = 4 mA	4.5 V		0.17	0.26		0.4		0.33	
		I_{OL} = 5.2 mA	6 V		0.15	0.26		0.4		0.33	
I_I	$V_I = V_{CC}$ or 0		6 V		±0.1	±100		±1000		±1000	nA
I_{CC}	$V_I = V_{CC}$ or 0,	I_O = 0	6 V			4		80		40	µA
C_i			2 V to 6 V		3	10		10		10	pF

5.5 Timing Requirements

over recommended operating free-air temperature range (unless otherwise noted)

			V_{CC}	T_A = 25°C		SN54HC112		SN74HC112		UNIT
				MIN	MAX	MIN	MAX	MIN	MAX	
f_{clock}	Clock frequency		2 V		5		3.4		4	MHz
			4.5 V		25		17		20	
			6 V		29		20		24	
t_w	Pulse duration	$\overline{PRE}$ or $\overline{CLR}$ low	2 V	100		150		125		ns
			4.5 V	20		30		25		
			6 V	17		25		21		
		CLK high or low	2 V	100		150		125		
			4.5 V	20		30		25		
			6 V	17		25		21		
t_{su}	Setup time before CLK↓	Data (J, K)	2 V	100		150		125		ns
			4.5 V	20		30		25		
			6 V	17		25		21		
		$\overline{PRE}$ or $\overline{CLR}$ inactive	2 V	100		150		125		
			4.5 V	20		30		25		
			6 V	17		25		21		
t_h	Hold time, data after CLK↓		2 V	0		0		0		ns
			4.5 V	0		0		0		
			6 V	0		0		0		

Copyright © 2022 Texas Instruments Incorporated

5.6 Switching Characteristics

over recommended operating free-air temperature range, C_L = 50 pF (unless otherwise noted) (see Parameter Measurement Information)

PARAMETER	FROM (INPUT)	TO (OUTPUT)	V_{CC}	T_A = 25°C			SN54HC112		SN74HC112		UNIT
				MIN	TYP	MAX	MIN	MAX	MIN	MAX	
f_{max}			2 V	5	10		3.4		4		MHz
			4.5 V	25	50		17		20		
			6 V	29	60		20		24		
t_{pd}	$\overline{PRE}$ or $\overline{CLR}$	Q or $\overline{Q}$	2 V		54	165		245		205	ns
			4.5 V		16	33		49		41	
			6 V		13	28		42		35	
	CLK	Q or $\overline{Q}$	2 V		56	125		185		155	
			4.5 V		16	25		37		31	
			6 V		13	21		31		26	
t_t		Q or $\overline{Q}$	2 V		29	75		110		95	ns
			4.5 V		9	15		22		19	
			6 V		8	13		19		16	

5.7 Operating Characteristics

T_A = 25°C

PARAMETER		TEST CONDITIONS	TYP	UNIT
C_{pd}	Power dissipation capacitance	No load	35	pF

Copyright © 2022 Texas Instruments Incorporated

6 Parameter Measurement Information

Phase relationships between waveforms were chosen arbitrarily. All input pulses are supplied by generators having the following characteristics: PRR ≤ 1 MHz, Z_O = 50 Ω, t_t < 6 ns.

For clock inputs, f_{max} is measured when the input duty cycle is 50%.

The outputs are measured one at a time with one input transition per measurement.

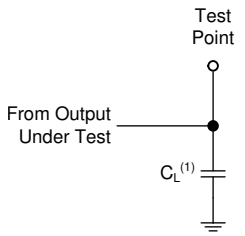

(1) C_L includes probe and test-fixture capacitance.

Figure 6-1. Load Circuit for Push-Pull Outputs

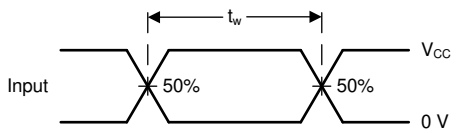

Figure 6-2. Voltage Waveforms, Standard CMOS Inputs Pulse Duration

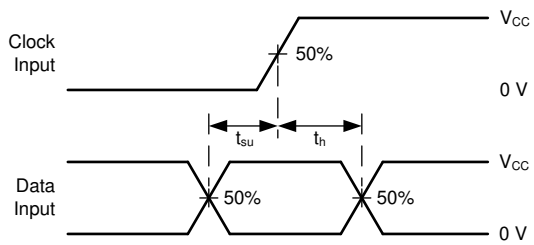

Figure 6-3. Voltage Waveforms, Standard CMOS Inputs Setup and Hold Times

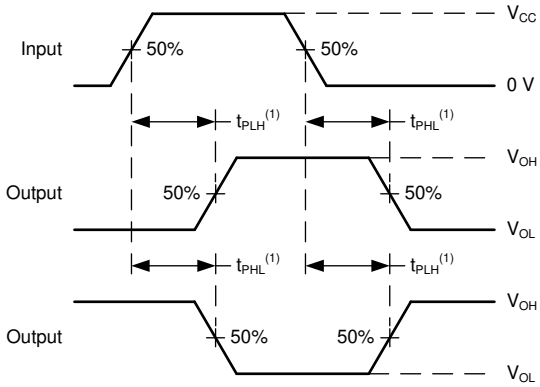

(1) The greater between t_{PLH} and t_{PHL} is the same as t_{pd}.

Figure 6-4. Voltage Waveforms, Propagation Delays for Standard CMOS Inputs

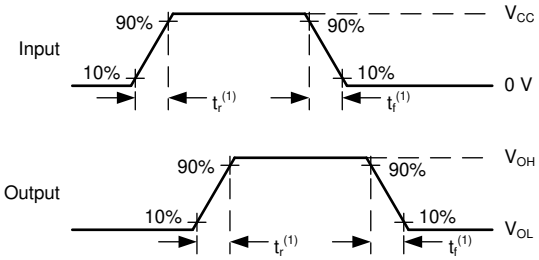

(1) The greater between t_r and t_f is the same as t_t.

Figure 6-5. Voltage Waveforms, Input and Output Transition Times for Standard CMOS Inputs

7 Detailed Description

7.1 Overview

The ’HC112 devices contain two independent J-K negative-edge-triggered flip-flops. A low level at the preset ($\overline{PRE}$) or clear ($\overline{CLR}$) inputs sets or resets the outputs, regardless of the levels of the other inputs. When $\overline{PRE}$ and $\overline{CLR}$ are inactive (high), data at the J and K inputs meeting the setup time requirements are transferred to the outputs on the negative-going edge of the clock (CLK) pulse. Clock triggering occurs at a voltage level and is not directly related to the fall time of the CLK pulse. Following the hold-time interval, data at the J and K inputs may be changed without affecting the levels at the outputs. These versatile flip-flops perform as toggle flip-flops by tying J and K high.

7.2 Functional Block Diagram

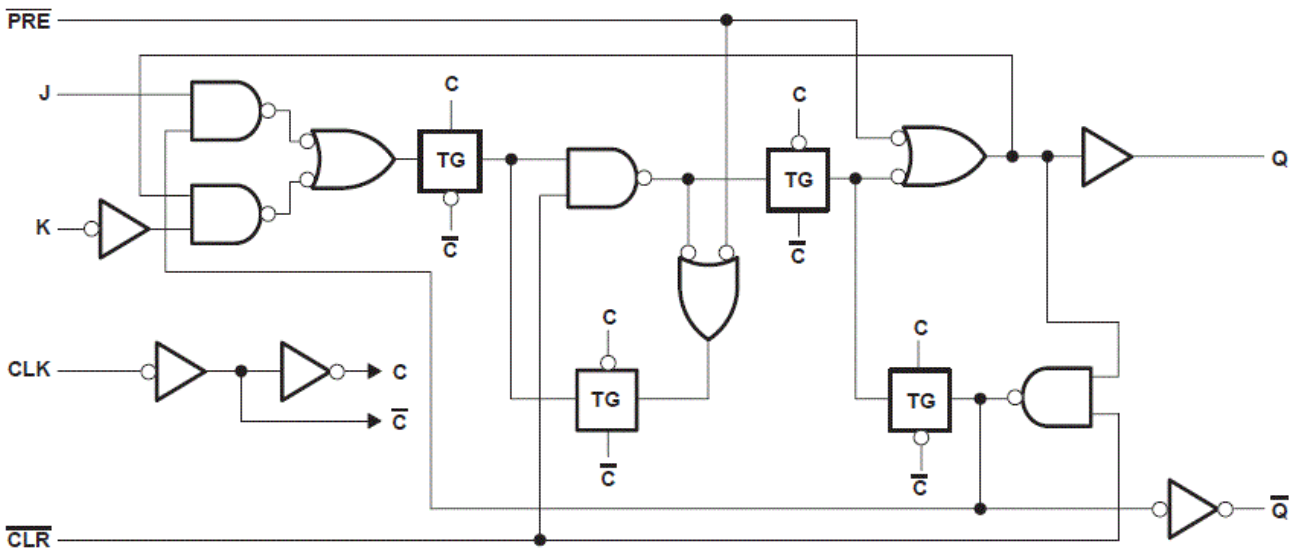

7.3 Device Functional Modes

Table 7-1. Function Table

INPUTS					OUTPUTS	
$\overline{PRE}$	$\overline{CLR}$	CLK	J	K	Q	$\overline{Q}$
L	H	X	X	X	H	H
H	L	X	X	X	L	H
L	L	X	X	X	H(1)	H(1)
H	H	↓	L	L	Q_0	$\overline{Q}_0$
H	H	↓	H	L	H	L
H	H	↓	L	H	L	H
H	H	↓	H	H	Toggle	
H	H	H	X	X	Q_0	$\overline{Q}_0$

(1) This configuration is nonstable; that is, it does not persist when either $\overline{PRE}$ or $\overline{CLR}$ returns to its inactive (high) level.

Copyright © 2022 Texas Instruments Incorporated

8 Power Supply Recommendations

The power supply can be any voltage between the minimum and maximum supply voltage rating located in the *Recommended Operating Conditions*. Each V_{CC} terminal should have a good bypass capacitor to prevent power disturbance. A 0.1-µF capacitor is recommended for this device. It is acceptable to parallel multiple bypass caps to reject different frequencies of noise. The 0.1-µF and 1-µF capacitors are commonly used in parallel. The bypass capacitor should be installed as close to the power terminal as possible for best results.

9 Layout

9.1 Layout Guidelines

When using multiple-input and multiple-channel logic devices inputs must not ever be left floating. In many cases, functions or parts of functions of digital logic devices are unused; for example, when only two inputs of a triple-input AND gate are used or only 3 of the 4 buffer gates are used. Such unused input pins must not be left unconnected because the undefined voltages at the outside connections result in undefined operational states. All unused inputs of digital logic devices must be connected to a logic high or logic low voltage, as defined by the input voltage specifications, to prevent them from floating. The logic level that must be applied to any particular unused input depends on the function of the device. Generally, the inputs are tied to GND or V_{CC}, whichever makes more sense for the logic function or is more convenient.

Copyright © 2022 Texas Instruments Incorporated

10 Device and Documentation Support

TI offers an extensive line of development tools. Tools and software to evaluate the performance of the device, generate code, and develop solutions are listed below.

10.1 Receiving Notification of Documentation Updates

To receive notification of documentation updates, navigate to the device product folder on ti.com. Click on *Subscribe to updates* to register and receive a weekly digest of any product information that has changed. For change details, review the revision history included in any revised document.

10.2 Support Resources

TI E2E™ support forums are an engineer's go-to source for fast, verified answers and design help — straight from the experts. Search existing answers or ask your own question to get the quick design help you need.

Linked content is provided "AS IS" by the respective contributors. They do not constitute TI specifications and do not necessarily reflect TI's views; see TI's Terms of Use.

10.3 Trademarks

TI E2E™ is a trademark of Texas Instruments.
All trademarks are the property of their respective owners.

10.4 Electrostatic Discharge Caution

This integrated circuit can be damaged by ESD. Texas Instruments recommends that all integrated circuits be handled with appropriate precautions. Failure to observe proper handling and installation procedures can cause damage.

ESD damage can range from subtle performance degradation to complete device failure. Precision integrated circuits may be more susceptible to damage because very small parametric changes could cause the device not to meet its published specifications.

10.5 Glossary

TI Glossary	This glossary lists and explains terms, acronyms, and definitions.

11 Mechanical, Packaging, and Orderable Information

The following pages include mechanical, packaging, and orderable information. This information is the most current data available for the designated devices. This data is subject to change without notice and revision of this document. For browser-based versions of this data sheet, refer to the left-hand navigation.

Copyright © 2022 Texas Instruments Incorporated

PACKAGING INFORMATION

Orderable Device	Status (1)	Package Type	Package Drawing	Pins	Package Qty	Eco Plan (2)	Lead finish/ Ball material (6)	MSL Peak Temp (3)	Op Temp (°C)	Device Marking (4/5)	Samples
84088012A	ACTIVE	LCCC	FK	20	1	Non-RoHS & Green	SNPB	N / A for Pkg Type	-55 to 125	84088012A SNJ54HC 112FK	Samples
8408801EA	ACTIVE	CDIP	J	16	1	Non-RoHS & Green	SNPB	N / A for Pkg Type	-55 to 125	8408801EA SNJ54HC112J	Samples
8408801FA	ACTIVE	CFP	W	16	1	Non-RoHS & Green	SNPB	N / A for Pkg Type	-55 to 125	8408801FA SNJ54HC112W	Samples
JM38510/65305BEA	ACTIVE	CDIP	J	16	1	Non-RoHS & Green	SNPB	N / A for Pkg Type	-55 to 125	JM38510/ 65305BEA	Samples
M38510/65305BEA	ACTIVE	CDIP	J	16	1	Non-RoHS & Green	SNPB	N / A for Pkg Type	-55 to 125	JM38510/ 65305BEA	Samples
SN54HC112J	ACTIVE	CDIP	J	16	1	Non-RoHS & Green	SNPB	N / A for Pkg Type	-55 to 125	SN54HC112J	Samples
SN74HC112D	ACTIVE	SOIC	D	16	40	RoHS & Green	NIPDAU	Level-1-260C-UNLIM	-40 to 85	HC112	Samples
SN74HC112DR	ACTIVE	SOIC	D	16	2500	RoHS & Green	NIPDAU	Level-1-260C-UNLIM	-40 to 85	HC112	Samples
SN74HC112DT	ACTIVE	SOIC	D	16	250	RoHS & Green	NIPDAU	Level-1-260C-UNLIM	-40 to 85	HC112	Samples
SN74HC112N	ACTIVE	PDIP	N	16	25	RoHS & Green	NIPDAU	N / A for Pkg Type	-40 to 85	SN74HC112N	Samples
SNJ54HC112FK	ACTIVE	LCCC	FK	20	1	Non-RoHS & Green	SNPB	N / A for Pkg Type	-55 to 125	84088012A SNJ54HC 112FK	Samples
SNJ54HC112J	ACTIVE	CDIP	J	16	1	Non-RoHS & Green	SNPB	N / A for Pkg Type	-55 to 125	8408801EA SNJ54HC112J	Samples
SNJ54HC112W	ACTIVE	CFP	W	16	1	Non-RoHS & Green	SNPB	N / A for Pkg Type	-55 to 125	8408801FA SNJ54HC112W	Samples

(1) The marketing status values are defined as follows:
ACTIVE: Product device recommended for new designs.
LIFEBUY: TI has announced that the device will be discontinued, and a lifetime-buy period is in effect.
NRND: Not recommended for new designs. Device is in production to support existing customers, but TI does not recommend using this part in a new design.
PREVIEW: Device has been announced but is not in production. Samples may or may not be available.
OBSOLETE: TI has discontinued the production of the device.

(2) **RoHS:** TI defines "RoHS" to mean semiconductor products that are compliant with the current EU RoHS requirements for all 10 RoHS substances, including the requirement that RoHS substance do not exceed 0.1% by weight in homogeneous materials. Where designed to be soldered at high temperatures, "RoHS" products are suitable for use in specified lead-free processes. TI may reference these types of products as "Pb-Free".
RoHS Exempt: TI defines "RoHS Exempt" to mean products that contain lead but are compliant with EU RoHS pursuant to a specific EU RoHS exemption.
Green: TI defines "Green" to mean the content of Chlorine (Cl) and Bromine (Br) based flame retardants meet JS709B low halogen requirements of <=1000ppm threshold. Antimony trioxide based flame retardants must also meet the <=1000ppm threshold requirement.

(3) MSL, Peak Temp. - The Moisture Sensitivity Level rating according to the JEDEC industry standard classifications, and peak solder temperature.

(4) There may be additional marking, which relates to the logo, the lot trace code information, or the environmental category on the device.

(5) Multiple Device Markings will be inside parentheses. Only one Device Marking contained in parentheses and separated by a "~" will appear on a device. If a line is indented then it is a continuation of the previous line and the two combined represent the entire Device Marking for that device.

(6) Lead finish/Ball material - Orderable Devices may have multiple material finish options. Finish options are separated by a vertical ruled line. Lead finish/Ball material values may wrap to two lines if the finish value exceeds the maximum column width.

Important Information and Disclaimer: The information provided on this page represents TI's knowledge and belief as of the date that it is provided. TI bases its knowledge and belief on information provided by third parties, and makes no representation or warranty as to the accuracy of such information. Efforts are underway to better integrate information from third parties. TI has taken and continues to take reasonable steps to provide representative and accurate information but may not have conducted destructive testing or chemical analysis on incoming materials and chemicals. TI and TI suppliers consider certain information to be proprietary, and thus CAS numbers and other limited information may not be available for release.

In no event shall TI's liability arising out of such information exceed the total purchase price of the TI part(s) at issue in this document sold by TI to Customer on an annual basis.

OTHER QUALIFIED VERSIONS OF SN54HC112, SN74HC112 :

- Catalog : SN74HC112
- Military : SN54HC112

NOTE: Qualified Version Definitions:

- Catalog - TI's standard catalog product
- Military - QML certified for Military and Defense Applications

TAPE AND REEL INFORMATION

REEL DIMENSIONS

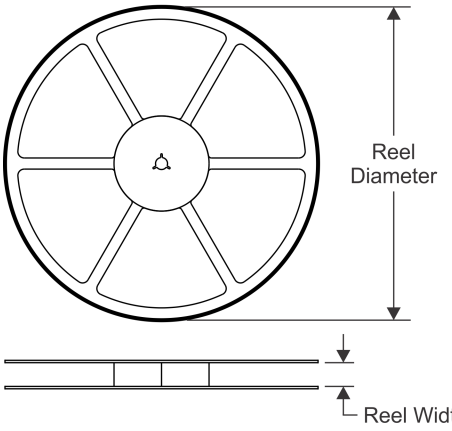

TAPE DIMENSIONS

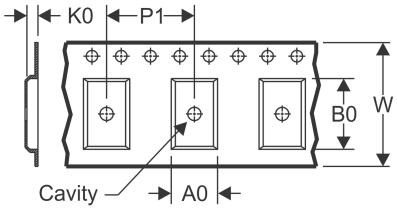

A0	Dimension designed to accommodate the component width
B0	Dimension designed to accommodate the component length
K0	Dimension designed to accommodate the component thickness
W	Overall width of the carrier tape
P1	Pitch between successive cavity centers

QUADRANT ASSIGNMENTS FOR PIN 1 ORIENTATION IN TAPE

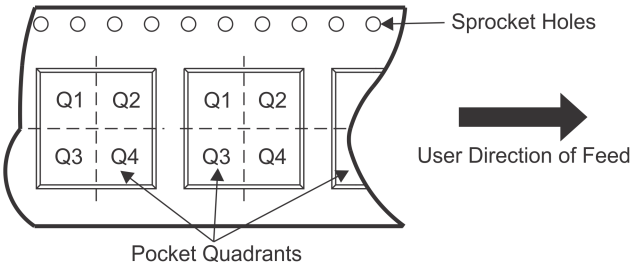

*All dimensions are nominal

Device	Package Type	Package Drawing	Pins	SPQ	Reel Diameter (mm)	Reel Width W1 (mm)	A0 (mm)	B0 (mm)	K0 (mm)	P1 (mm)	W (mm)	Pin1 Quadrant
SN74HC112DR	SOIC	D	16	2500	330.0	16.4	6.5	10.3	2.1	8.0	16.0	Q1

TAPE AND REEL BOX DIMENSIONS

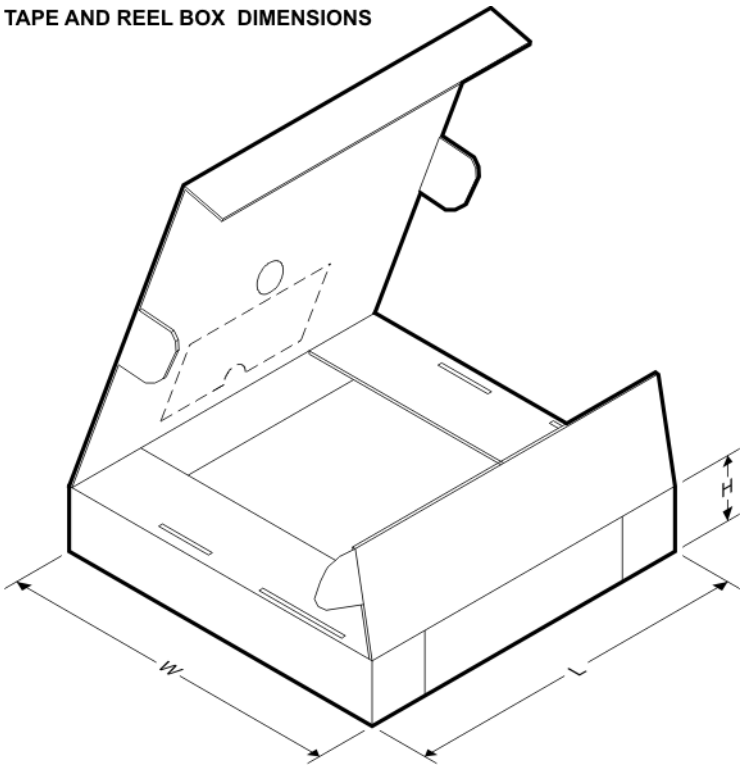

*All dimensions are nominal

Device	Package Type	Package Drawing	Pins	SPQ	Length (mm)	Width (mm)	Height (mm)
SN74HC112DR	SOIC	D	16	2500	340.5	336.1	32.0

TUBE

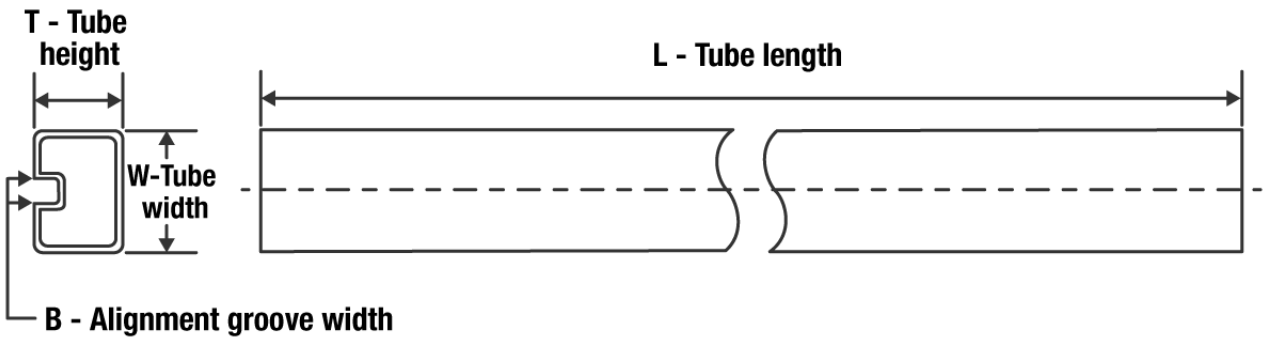

*All dimensions are nominal

Device	Package Name	Package Type	Pins	SPQ	L (mm)	W (mm)	T (µm)	B (mm)
84088012A	FK	LCCC	20	1	506.98	12.06	2030	NA
SN74HC112D	D	SOIC	16	40	507	8	3940	4.32
SN74HC112N	N	PDIP	16	25	506	13.97	11230	4.32
SN74HC112N	N	PDIP	16	25	506	13.97	11230	4.32
SNJ54HC112FK	FK	LCCC	20	1	506.98	12.06	2030	NA

FK (S–CQCC–N**) LEADLESS CERAMIC CHIP CARRIER

28 TERMINAL SHOWN

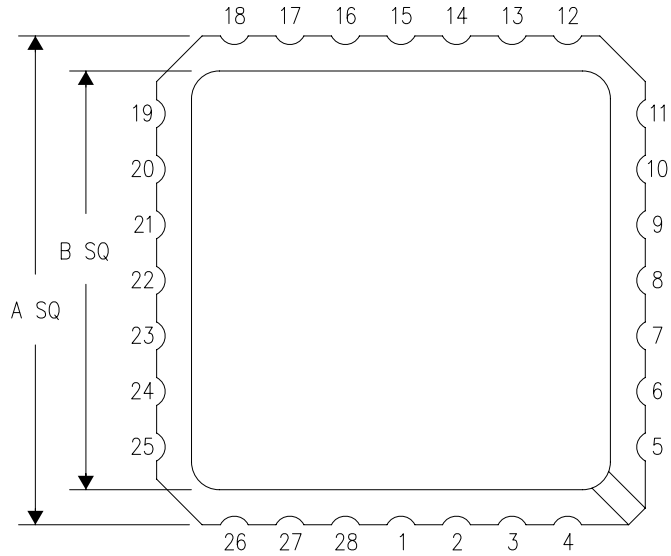

NO. OF TERMINALS **	A		B	
	MIN	MAX	MIN	MAX
20	0.342 (8,69)	0.358 (9,09)	0.307 (7,80)	0.358 (9,09)
28	0.442 (11,23)	0.458 (11,63)	0.406 (10,31)	0.458 (11,63)
44	0.640 (16,26)	0.660 (16,76)	0.495 (12,58)	0.560 (14,22)
52	0.740 (18,78)	0.761 (19,32)	0.495 (12,58)	0.560 (14,22)
68	0.938 (23,83)	0.962 (24,43)	0.850 (21,6)	0.858 (21,8)
84	1.141 (28,99)	1.165 (29,59)	1.047 (26,6)	1.063 (27,0)

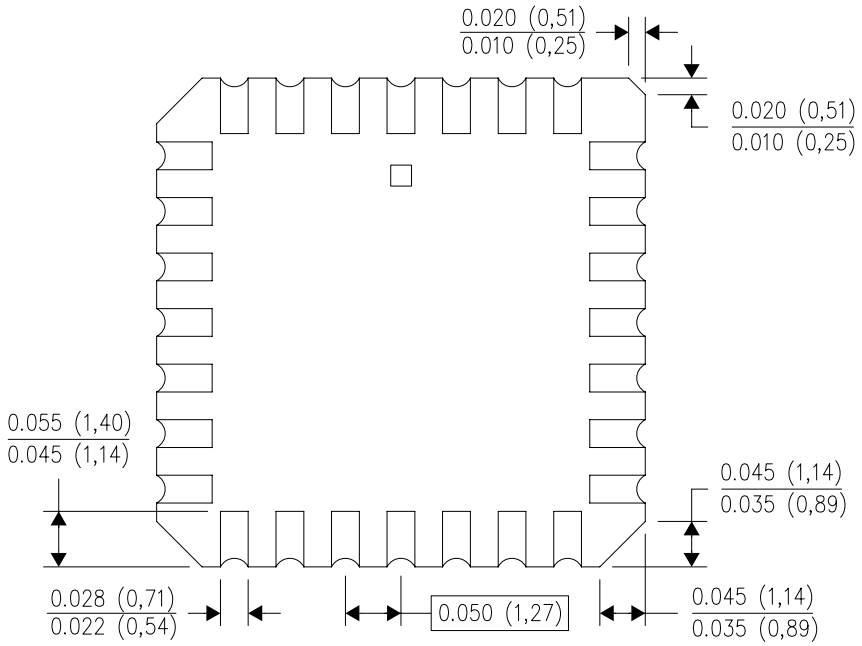

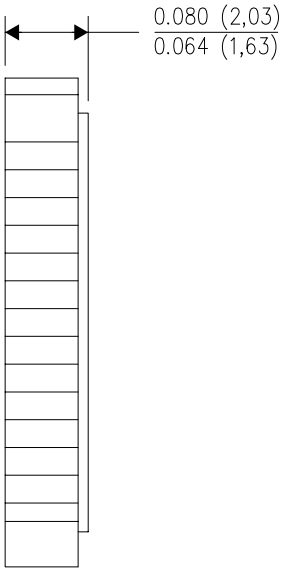

4040140/D 01/11

NOTES:
A. All linear dimensions are in inches (millimeters).
B. This drawing is subject to change without notice.
C. This package can be hermetically sealed with a metal lid.
D. Falls within JEDEC MS–004

D (R–PDSO–G16) PLASTIC SMALL OUTLINE

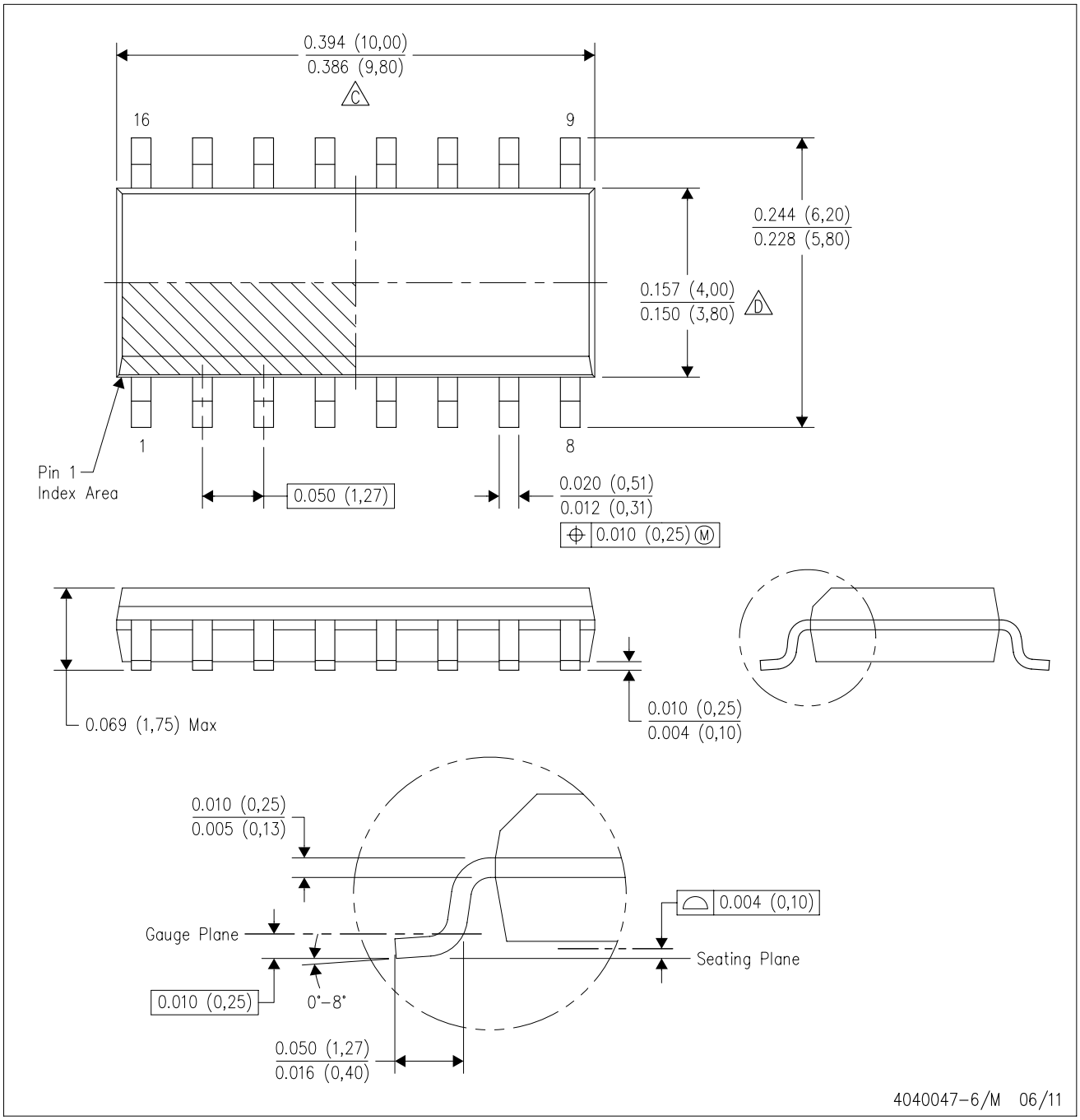

NOTES:
A. All linear dimensions are in inches (millimeters).
B. This drawing is subject to change without notice.
C. Body length does not include mold flash, protrusions, or gate burrs. Mold flash, protrusions, or gate burrs shall not exceed 0.006 (0,15) each side.
D. Body width does not include interlead flash. Interlead flash shall not exceed 0.017 (0,43) each side.
E. Reference JEDEC MS–012 variation AC.

D (R–PDSO–G16) PLASTIC SMALL OUTLINE

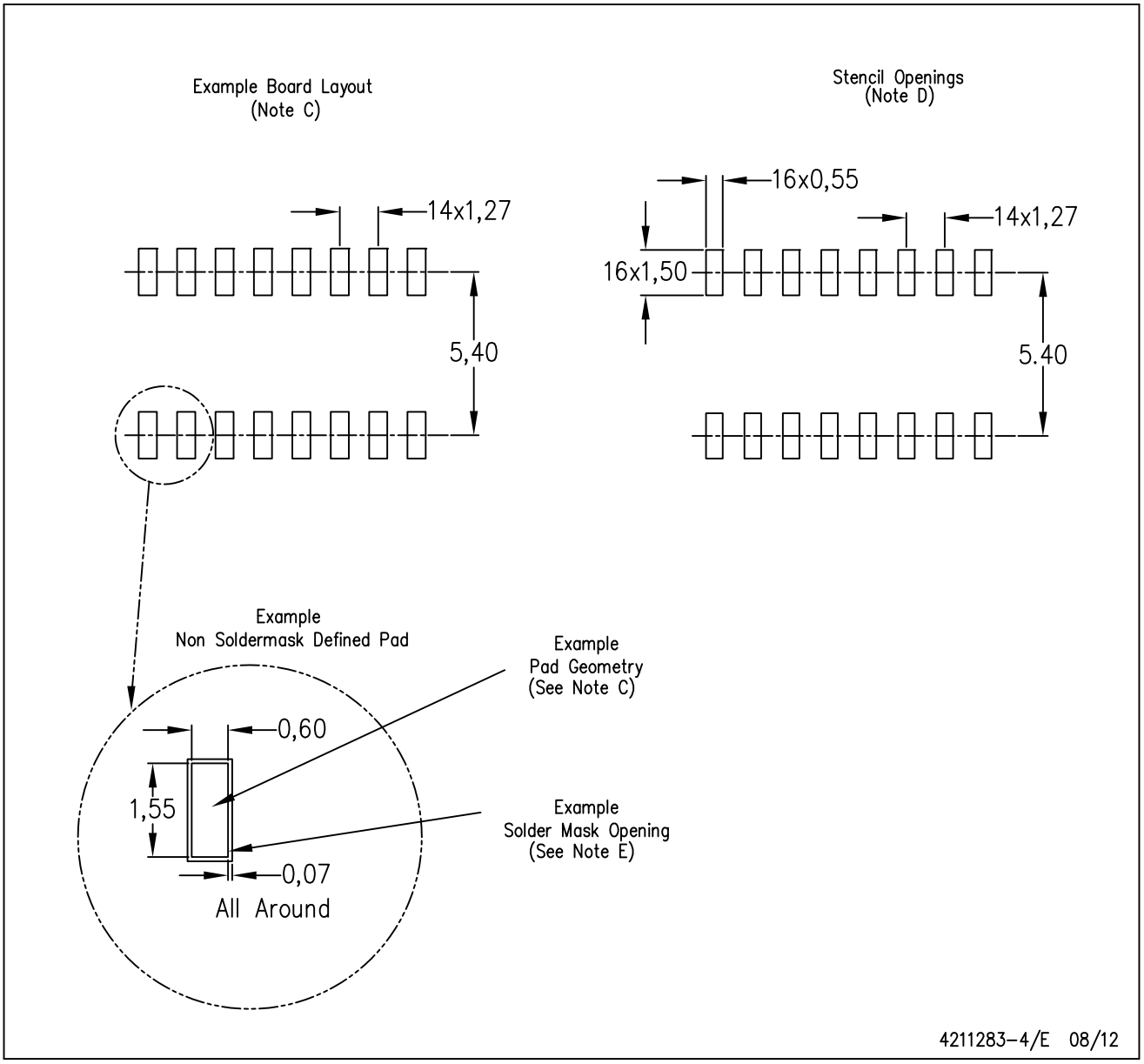

NOTES:
A. All linear dimensions are in millimeters.
B. This drawing is subject to change without notice.
C. Publication IPC–7351 is recommended for alternate designs.
D. Laser cutting apertures with trapezoidal walls and also rounding corners will offer better paste release. Customers should contact their board assembly site for stencil design recommendations. Refer to IPC–7525 for other stencil recommendations.
E. Customers should contact their board fabrication site for solder mask tolerances between and around signal pads.

W (R–GDFP–F16) CERAMIC DUAL FLATPACK

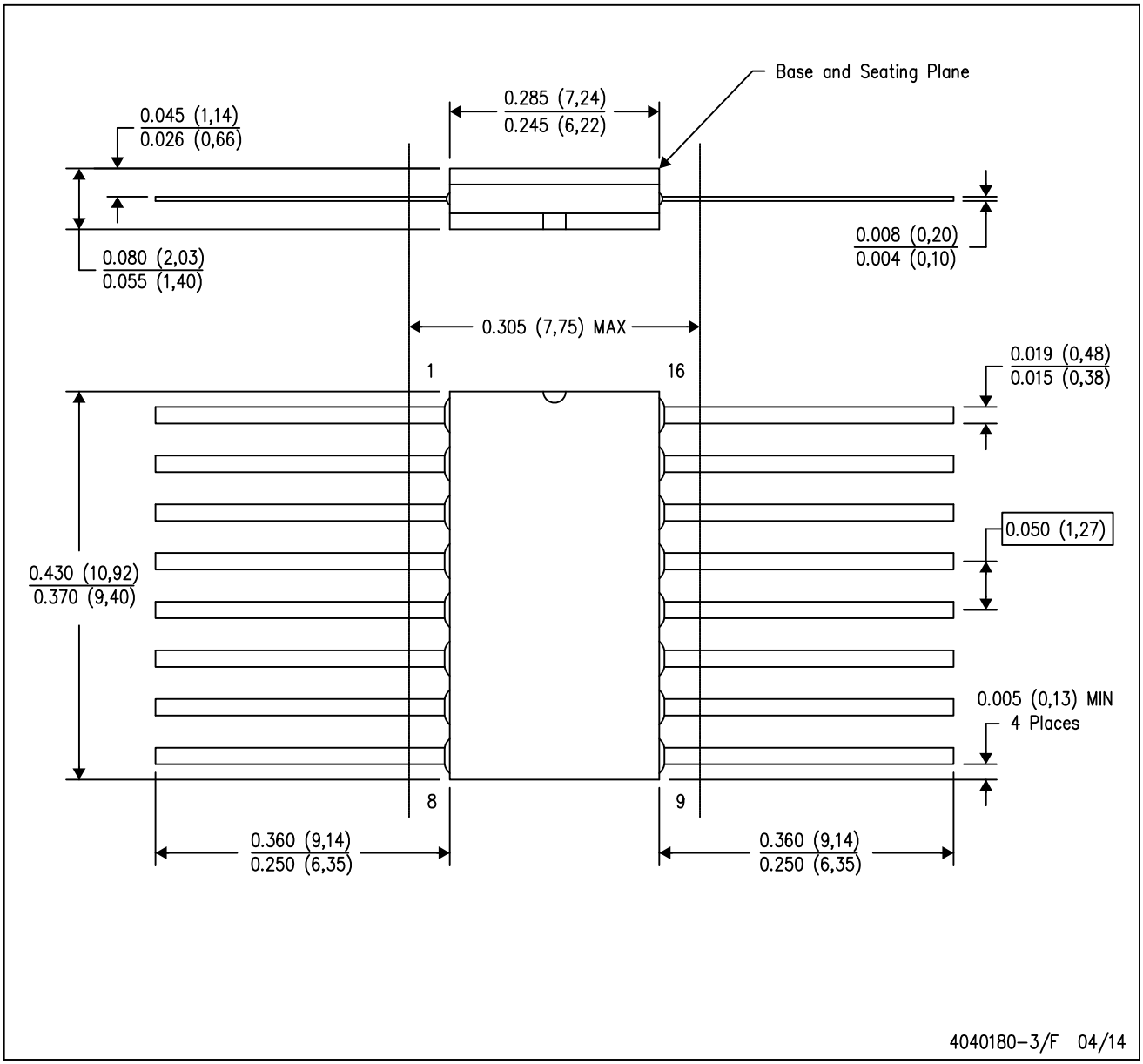

NOTES:
A. All linear dimensions are in inches (millimeters).
B. This drawing is subject to change without notice.
C. This package can be hermetically sealed with a ceramic lid using glass frit.
D. Index point is provided on cap for terminal identification only.
E. Falls within MIL STD 1835 GDFP2–F16

J (R–GDIP–T**) CERAMIC DUAL IN–LINE PACKAGE

14 LEADS SHOWN

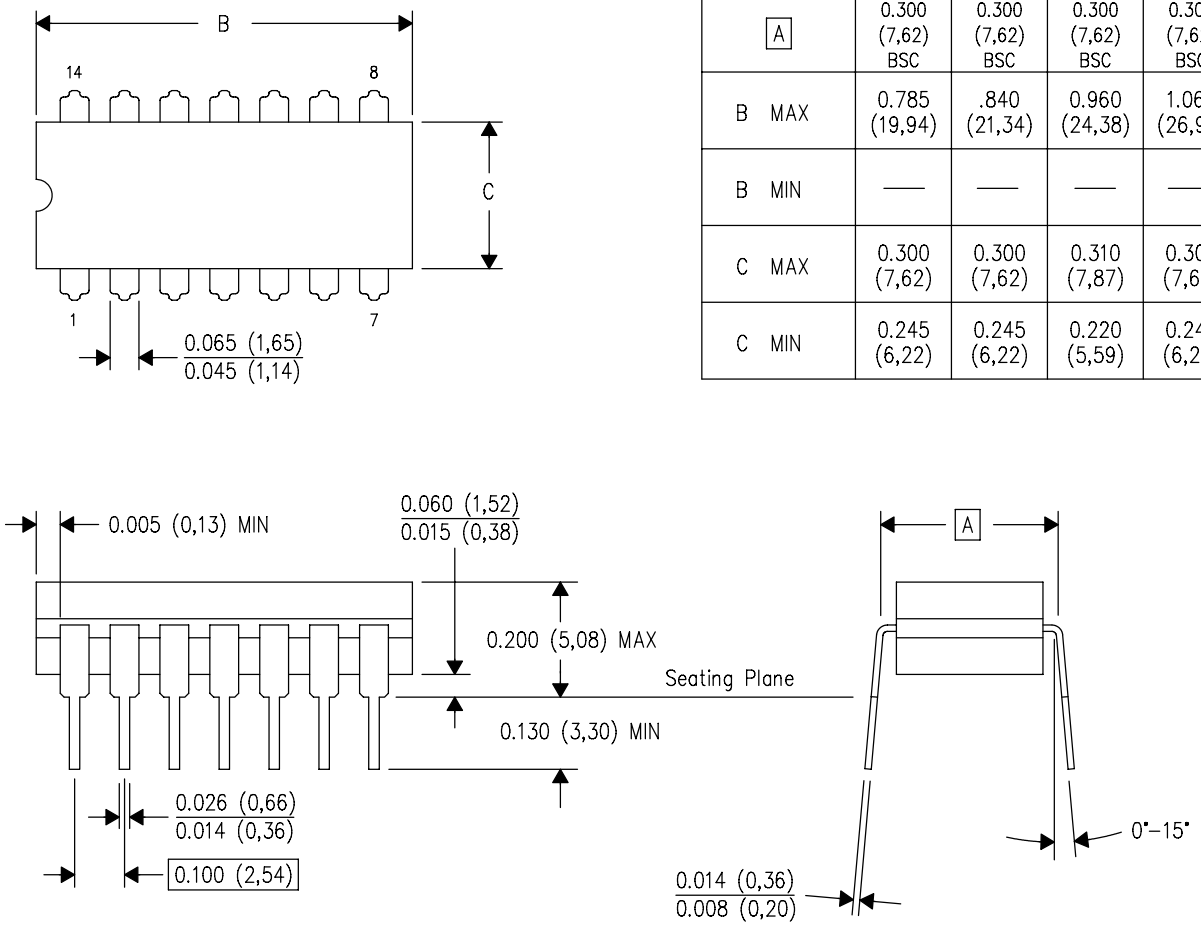

DIM \ PINS **	14	16	18	20
A	0.300 (7,62) BSC	0.300 (7,62) BSC	0.300 (7,62) BSC	0.300 (7,62) BSC
B MAX	0.785 (19,94)	.840 (21,34)	0.960 (24,38)	1.060 (26,92)
B MIN	—	—	—	—
C MAX	0.300 (7,62)	0.300 (7,62)	0.310 (7,87)	0.300 (7,62)
C MIN	0.245 (6,22)	0.245 (6,22)	0.220 (5,59)	0.245 (6,22)

4040083/F 03/03

NOTES:
- A. All linear dimensions are in inches (millimeters).
- B. This drawing is subject to change without notice.
- C. This package is hermetically sealed with a ceramic lid using glass frit.
- D. Index point is provided on cap for terminal identification only on press ceramic glass frit seal only.
- E. Falls within MIL STD 1835 GDIP1–T14, GDIP1–T16, GDIP1–T18 and GDIP1–T20.

N (R–PDIP–T**) PLASTIC DUAL–IN–LINE PACKAGE

16 PINS SHOWN

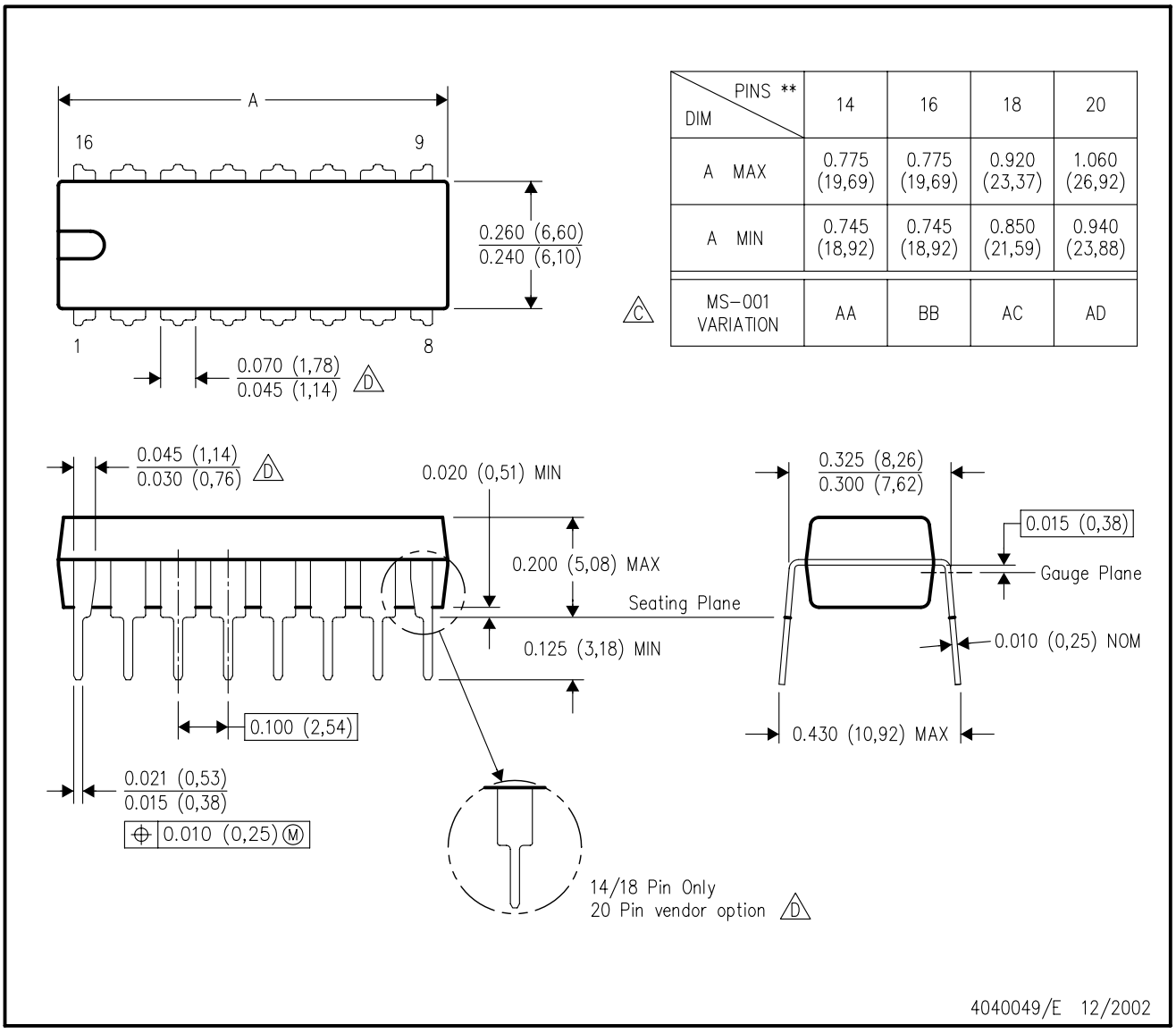

DIM \ PINS **	14	16	18	20
A MAX	0.775 (19,69)	0.775 (19,69)	0.920 (23,37)	1.060 (26,92)
A MIN	0.745 (18,92)	0.745 (18,92)	0.850 (21,59)	0.940 (23,88)
MS–001 VARIATION (C)	AA	BB	AC	AD

NOTES:
A. All linear dimensions are in inches (millimeters).
B. This drawing is subject to change without notice.
C. Falls within JEDEC MS–001, except 18 and 20 pin minimum body length (Dim A).
D. The 20 pin end lead shoulder width is a vendor option, either half or full width.

IMPORTANT NOTICE AND DISCLAIMER

TI PROVIDES TECHNICAL AND RELIABILITY DATA (INCLUDING DATA SHEETS), DESIGN RESOURCES (INCLUDING REFERENCE DESIGNS), APPLICATION OR OTHER DESIGN ADVICE, WEB TOOLS, SAFETY INFORMATION, AND OTHER RESOURCES “AS IS” AND WITH ALL FAULTS, AND DISCLAIMS ALL WARRANTIES, EXPRESS AND IMPLIED, INCLUDING WITHOUT LIMITATION ANY IMPLIED WARRANTIES OF MERCHANTABILITY, FITNESS FOR A PARTICULAR PURPOSE OR NON-INFRINGEMENT OF THIRD PARTY INTELLECTUAL PROPERTY RIGHTS.

These resources are intended for skilled developers designing with TI products. You are solely responsible for (1) selecting the appropriate TI products for your application, (2) designing, validating and testing your application, and (3) ensuring your application meets applicable standards, and any other safety, security, regulatory or other requirements.

These resources are subject to change without notice. TI grants you permission to use these resources only for development of an application that uses the TI products described in the resource. Other reproduction and display of these resources is prohibited. No license is granted to any other TI intellectual property right or to any third party intellectual property right. TI disclaims responsibility for, and you will fully indemnify TI and its representatives against, any claims, damages, costs, losses, and liabilities arising out of your use of these resources.

TI’s products are provided subject to TI’s Terms of Sale or other applicable terms available either on ti.com or provided in conjunction with such TI products. TI’s provision of these resources does not expand or otherwise alter TI’s applicable warranties or warranty disclaimers for TI products.

TI objects to and rejects any additional or different terms you may have proposed.

Mailing Address: Texas Instruments, Post Office Box 655303, Dallas, Texas 75265
Copyright © 2022, Texas Instruments Incorporated