- **2-V to 5.5-V $V_{CC}$ Operation**
- **Max $t_{pd}$ of 15 ns at 5 V**
- **Schmitt-Trigger Inputs Allow for Slow Input Rise/Fall Time**
- **Polarity Control for Y Outputs Selects True or Complementary Logic**
- **Typical $V_{OLP}$ (Output Ground Bounce) <0.8 V at $V_{CC}$ = 3.3 V, $T_A$ = 25°C**
- **Typical $V_{OHV}$ (Output $V_{OH}$ Undershoot) >2.3 V at $V_{CC}$ = 3.3 V, $T_A$ = 25°C**
- **$I_{off}$ Supports Partial-Power-Down Mode Operation**
- **Supports Mixed-Mode Voltage Operation on All Ports**
- **Latch-Up Performance Exceeds 250 mA Per JESD 17**
- **ESD Protection Exceeds JESD 22**
  - **2000-V Human-Body Model (A114-A)**
  - **200-V Machine Model (A115-A)**
  - **1000-V Charged-Device Model (C101)**

**NT OR PW PACKAGE**
**(TOP VIEW)**

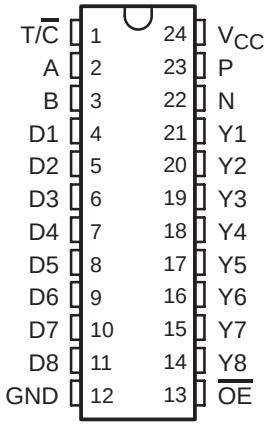


## description/ordering information

The SN74LV8151 is a 10-bit universal Schmitt-trigger buffer with 3-state outputs, designed for 2-V to 5.5-V $V_{CC}$ operation. The logic control (T/$\overline{C}$) pin allows the user to configure Y1 to Y8 as noninverting or inverting outputs. When T/$\overline{C}$ is high, the Y outputs are noninverted (true logic ), and when T/$\overline{C}$ is low, the Y outputs are inverted (complementary logic).

When output-enable ($\overline{OE}$) input is low, the device passes data from Dn to Yn. When $\overline{OE}$ is high, the Y outputs are in the high-impedance state. The path A to P is a simple Schmitt-trigger buffer, and the path B to N is a simple Schmitt-trigger inverter.

This device is fully specified for partial-power-down applications using $I_{off}$. The $I_{off}$ circuitry disables the outputs, preventing damaging current backflow through the device when it is powered down.

To ensure the high-impedance state during power up or power down, $\overline{OE}$ should be tied to $V_{CC}$ through a pullup resistor; the minimum value of the resistor is determined by the current-sinking capability of the driver.

**ORDERING INFORMATION**

| $T_A$ | PACKAGE† | | ORDERABLE PART NUMBER | TOP-SIDE MARKING |
|---|---|---|---|---|
| −40°C to 85°C | PDIP − NT | Tube | SN74LV8151NT | SN74LV8151NT |
| | TSSOP − PW | Tube | SN74LV8151PW | LV8151 |
| | | Tape and reel | SN74LV8151PWR | |

† Package drawings, standard packing quantities, thermal data, symbolization, and PCB design guidelines are available at www.ti.com/sc/package.

Please be aware that an important notice concerning availability, standard warranty, and use in critical applications of Texas Instruments semiconductor products and disclaimers thereto appears at the end of this data sheet.

PRODUCTION DATA information is current as of publication date. Products conform to specifications per the terms of Texas Instruments standard warranty. Production processing does not necessarily include testing of all parameters.

Copyright © 2004, Texas Instruments Incorporated

**FUNCTION TABLES**

| INPUT A | OUTPUT P |
|---|---|
| L | L |
| H | H |

| INPUT B | OUTPUT N |
|---|---|
| L | H |
| H | L |

| INPUTS | | | OUTPUT Y |
|---|---|---|---|
| $\overline{OE}$ | T/$\overline{C}$ | D | |
| L | L | L | H |
| L | L | H | L |
| L | H | L | L |
| L | H | H | H |
| H | X | X | Z |

## logic diagram

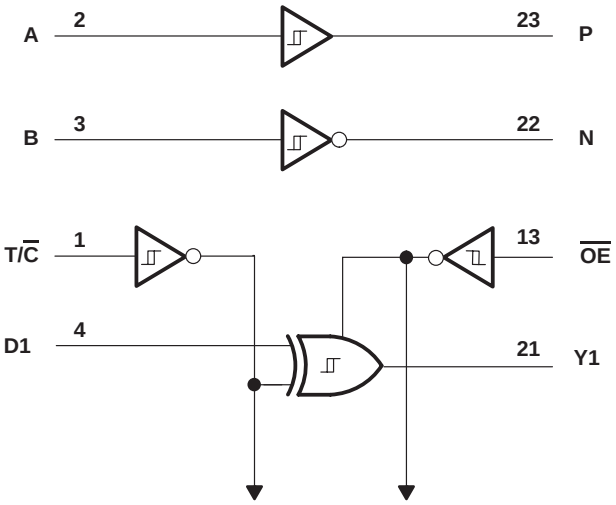


**To Seven Other Channels**

**absolute maximum ratings over operating free-air temperature range (unless otherwise noted)†**

| | |
|---|---|
| Supply voltage range, $V_{CC}$ | −0.5 V to 7 V |
| Input voltage range, $V_I$ (see Note 1) | −0.5 V to 7 V |
| Voltage range applied to any output in the high-impedance or power-off state, $V_O$ (see Note 1) | −0.5 V to 7 V |
| Output voltage range, $V_O$ (see Notes 1 and 2) | −0.5 V to $V_{CC}$ + 0.5 V |
| Input clamp current, $I_{IK}$ ($V_I$ < 0) | −20 mA |
| Output clamp current, $I_{OK}$ ($V_O$ < 0) | −50 mA |
| Continuous output current, $I_O$ ($V_O$ = 0 to $V_{CC}$) | ±35 mA |
| Continuous current through $V_{CC}$ or GND | ±70 mA |
| Package thermal impedance, $\theta_{JA}$ (see Note 3): NT package | 67°C/W |
| (see Note 4): PW package | 88°C/W |
| Storage temperature range, $T_{stg}$ | −65°C to 150°C |

† Stresses beyond those listed under “absolute maximum ratings” may cause permanent damage to the device. These are stress ratings only, and functional operation of the device at these or any other conditions beyond those indicated under “recommended operating conditions” is not implied. Exposure to absolute-maximum-rated conditions for extended periods may affect device reliability.

NOTES: 1. The input and output voltage ratings may be exceeded if the input and output current ratings are observed.
2. This value is limited to 5.5 V maximum.
3. The package thermal impedance is calculated in accordance with JESD 51-3.
4. The package thermal impedance is calculated in accordance with JESD 51-7.

## recommended operating conditions (see Note 5)

| | | | $V_{CC}$ | MIN | MAX | UNIT |
|---|---|---|---|---|---|---|
| $V_{CC}$ | Supply voltage | | | 2 | 5.5 | V |
| $V_{IH}$ | High-level input voltage | | 2 V | 1.5 | | V |
| | | | 2.3 V to 2.7 V | $V_{CC} \times 0.7$ | | |
| | | | 3 V to 3.6 V | $V_{CC} \times 0.7$ | | |
| | | | 4.5 V to 5.5 V | $V_{CC} \times 0.7$ | | |
| $V_{IL}$ | Low-level input voltage | | 2 V | | 0.5 | V |
| | | | 2.3 V to 2.7 V | | $V_{CC} \times 0.3$ | |
| | | | 3 V to 3.6 V | | $V_{CC} \times 0.3$ | |
| | | | 4.5 V to 5.5 V | | $V_{CC} \times 0.3$ | |
| $V_I$ | Input voltage | | | 0 | 5.5 | V |
| $V_O$ | Output voltage | High or low state | | 0 | $V_{CC}$ | V |
| | | 3-state | | 0 | 5.5 | |
| $I_{OH}$ | High-level output current | | 2 V | | −50 | μA |
| | | | 2.3 V to 2.7 V | | −2 | mA |
| | | | 3 V to 3.6 V | | −6 | |
| | | | 4.5 V to 5.5 V | | −12 | |
| $I_{OL}$ | Low-level output current | | 2 V | | 50 | μA |
| | | | 2.3 V to 2.7 V | | 2 | mA |
| | | | 3 V to 3.6 V | | 6 | |
| | | | 4.5 V to 5.5 V | | 12 | |
| Δt/Δv | Input transition rise or fall rate | T/$\overline{C}$, $\overline{OE}$ inputs | 2.3 V to 2.7 V | | 200 | ns/V |
| | | | 3 V to 3.6 V | | 100 | |
| | | | 4.5 V to 5.5 V | | 20 | |
| | | A, B, D inputs | 2.3 V to 2.7 V | | 4 | ms/V |
| | | | 3 V to 3.6 V | | 3 | |
| | | | 4.5 V to 5.5 V | | 2 | |
| $T_A$ | Operating free-air temperature | | | −40 | 85 | °C |

NOTES: 5. All unused inputs of the device must be held at $V_{CC}$ or GND to ensure proper device operation. Refer to the TI application report, *Implications of Slow or Floating CMOS Inputs*, literature number SCBA004.

**electrical characteristics over recommended operating free-air temperature range (unless otherwise noted)**

| PARAMETER | TEST CONDITIONS | $V_{CC}$ | MIN | TYP | MAX | UNIT |
|---|---|---|---|---|---|---|
| $V_{T+}$ Positive-going input threshold voltage | A, B, and D inputs | 2.5 V | | | 1.75 | V |
| | | 3.3 V | | | 2.31 | |
| | | 5 V | | | 3.5 | |
| $V_{T-}$ Negative-going input threshold voltage | A, B, and D inputs | 2.5 V | 0.75 | | | V |
| | | 3.3 V | 0.99 | | | |
| | | 5 V | 1.5 | | | |
| $\Delta V_T$ Hysteresis ($V_{T+} - V_{T-}$) | A, B, and D inputs | 2.5 V | 0.25 | | 1 | V |
| | | 3.3 V | 0.33 | | 1.32 | |
| | | 5 V | 0.5 | | 2 | |
| $V_{OH}$ | $I_{OH}$ = −50 μA | 2 V to 5.5 V | $V_{CC}$ − 0.1 | | | V |
| | $I_{OH}$ = −2 mA | 2.3 V | 2 | | | |
| | $I_{OH}$ = −6 mA | 3 V | 2.48 | | | |
| | $I_{OH}$ = −12 mA | 4.5 V | 3.8 | | | |
| $V_{OL}$ | $I_{OL}$ = 50 μA | 2 V to 5.5 V | | | 0.1 | V |
| | $I_{OL}$ = 2 mA | 2.3 V | | | 0.4 | |
| | $I_{OL}$ = 6 mA | 3 V | | | 0.44 | |
| | $I_{OL}$ = 12 mA | 4.5 V | | | 0.55 | |
| $I_I$ | $V_I$ = 5.5 V or GND | 0 to 5.5 V | | | ±1 | μA |
| $I_{OZ}$ | $V_O = V_{CC}$ or GND | 5.5 V | | | ±5 | μA |
| $I_{CC}$ | $V_I = V_{CC}$ or GND, $I_O$ = 0 | 5.5 V | | | 20 | μA |
| $I_{off}$ | $V_I$ or $V_O$ = 0 to 5.5 V | 0 | | | 5 | μA |
| $C_i$ | $V_I = V_{CC}$ or GND | 3.3 V | | 3 | | pF |
| | | 5 V | | 3 | | |
| $C_o$ | $V_O = V_{CC}$ or GND | 3.3 V | | 5 | | pF |
| | | 5 V | | 5 | | |

**switching characteristics over recommended operating free-air temperature range, $V_{CC}$ = 2.5 V ± 0.2 V (unless otherwise noted) (see Figure 1)**

| PARAMETER | FROM (INPUT) | TO (OUTPUT) | LOAD CAPACITANCE | $T_A$ = 25°C TYP | MIN | MAX | UNIT |
|---|---|---|---|---|---|---|---|
| $t_{pd}$ | A or B | P or N | $C_L$ = 15 pF | 22 | 1 | 45 | ns |
| | D | Y | | 23 | 1 | 49 | |
| | T/$\overline{C}$ | | | 24 | 1 | 50 | |
| $t_{en}$ | $\overline{OE}$ | Y | | 12 | 1 | 25 | ns |
| $t_{dis}$ | $\overline{OE}$ | Y | | 11 | 1 | 20 | ns |
| $t_{pd}$ | A or B | P or N | $C_L$ = 50 pF | 26 | 1 | 52 | ns |
| | D | Y | | 28 | 1 | 57 | |
| | T/$\overline{C}$ | | | 29 | 1 | 58 | |
| $t_{en}$ | $\overline{OE}$ | Y | | 15 | 1 | 30 | ns |
| $t_{dis}$ | $\overline{OE}$ | Y | | 15 | 1 | 26 | ns |

**switching characteristics over recommended operating free-air temperature range, $V_{CC}$ = 3.3 V ± 0.3 V (unless otherwise noted) (see Figure 1)**

| PARAMETER | FROM (INPUT) | TO (OUTPUT) | LOAD CAPACITANCE | $T_A$ = 25°C | MIN | MAX | UNIT |
|---|---|---|---|---|---|---|---|
| | | | | TYP | | | |
| $t_{pd}$ | A or B | P or N | $C_L$ = 15 pF | 14 | 1 | 26 | ns |
| | D | Y | | 15 | 1 | 29 | |
| | $\overline{T/C}$ | | | 16 | 1 | 30 | |
| $t_{en}$ | $\overline{OE}$ | Y | | 9 | 1 | 16 | ns |
| $t_{dis}$ | $\overline{OE}$ | Y | | 8 | 1 | 14 | ns |
| $t_{pd}$ | A or B | P or N | $C_L$ = 50 pF | 17 | 1 | 32 | ns |
| | D | Y | | 18 | 1 | 34 | |
| | $\overline{T/C}$ | | | 20 | 1 | 36 | |
| $t_{en}$ | $\overline{OE}$ | Y | | 11 | 1 | 20 | ns |
| $t_{dis}$ | $\overline{OE}$ | Y | | 11 | 1 | 18 | ns |

**switching characteristics over recommended operating free-air temperature range, $V_{CC}$ = 5 V ± 0.5 V (unless otherwise noted) (see Figure 1)**

| PARAMETER | FROM (INPUT) | TO (OUTPUT) | LOAD CAPACITANCE | $T_A$ = 25°C | MIN | MAX | UNIT |
|---|---|---|---|---|---|---|---|
| | | | | TYP | | | |
| $t_{pd}$ | A or B | P or N | $C_L$ = 15 pF | 9 | 1 | 15 | ns |
| | D | Y | | 10 | 1 | 16 | |
| | $\overline{T/C}$ | | | 11 | 1 | 17 | |
| $t_{en}$ | $\overline{OE}$ | Y | | 6 | 1 | 10.5 | ns |
| $t_{dis}$ | $\overline{OE}$ | Y | | 6 | 1 | 10 | ns |
| $t_{pd}$ | A or B | P or N | $C_L$ = 50 pF | 11 | 1 | 18 | ns |
| | D | Y | | 12 | 1 | 20 | |
| | $\overline{T/C}$ | | | 13 | 1 | 21 | |
| $t_{en}$ | $\overline{OE}$ | Y | | 8 | 1 | 12.5 | ns |
| $t_{dis}$ | $\overline{OE}$ | Y | | 8 | 1 | 11.5 | ns |

**noise characteristics, $V_{CC}$ = 3.3 V, $C_L$ = 50 pF (see Note 6)**

| PARAMETER | | $T_A$ = 25°C | | | UNIT |
|---|---|---|---|---|---|
| | | MIN | TYP | MAX | |
| $V_{OL(P)}$ | Quiet output, maximum dynamic $V_{OL}$ | | 0.6 | | V |
| $V_{OL(V)}$ | Quiet output, minimum dynamic $V_{OL}$ | | −0.6 | | V |
| $V_{OH(V)}$ | Quiet output, minimum dynamic $V_{OH}$ | | 2.9 | | V |
| $V_{IH(D)}$ | High-level dynamic input voltage | 2.31 | | | V |
| $V_{IL(D)}$ | Low-level dynamic input voltage | | | 0.99 | V |

NOTE 6: Characteristics are for surface-mount packages only.

## operating characteristics, $T_A$ = 25°C

| PARAMETER | | TEST CONDITIONS | $V_{CC}$ | TYP | UNIT |
|---|---|---|---|---|---|
| $C_{pd}$ | Power dissipation capacitance | $C_L$ = No load, f = 1 MHz | 3.3 V | 15 | pF |
| | | | 5 V | 16 | |

## PARAMETER MEASUREMENT INFORMATION

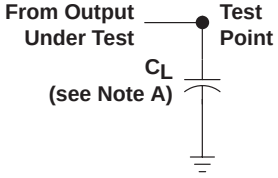


LOAD CIRCUIT FOR
TOTEM-POLE OUTPUTS

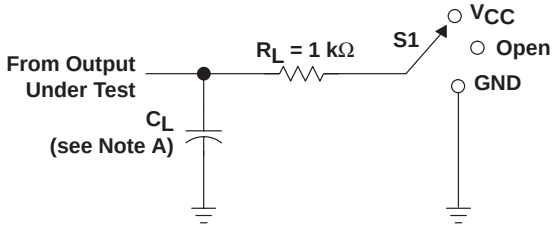


LOAD CIRCUIT FOR
3-STATE AND OPEN-DRAIN OUTPUTS

| TEST | S1 |
|---|---|
| $t_{PLH}/t_{PHL}$ | Open |
| $t_{PLZ}/t_{PZL}$ | $V_{CC}$ |
| $t_{PHZ}/t_{PZH}$ | GND |
| Open Drain | $V_{CC}$ |

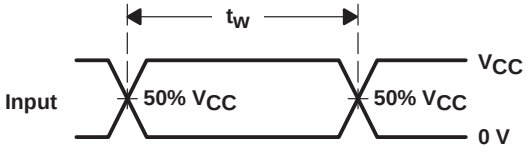


VOLTAGE WAVEFORMS
PULSE DURATION

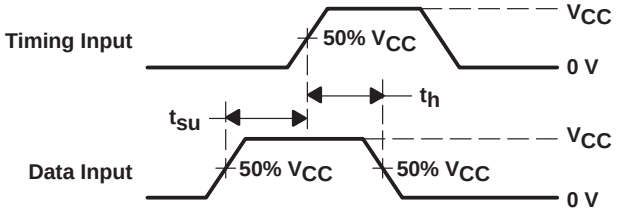


VOLTAGE WAVEFORMS
SETUP AND HOLD TIMES

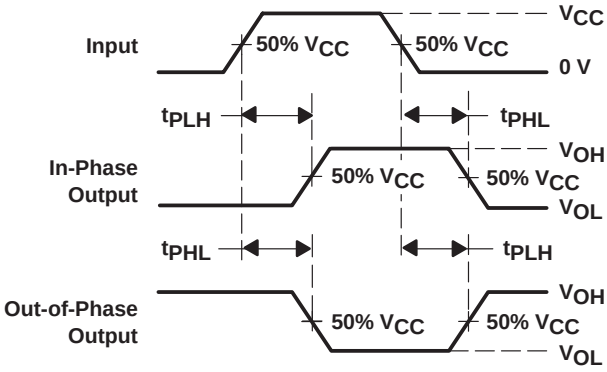


VOLTAGE WAVEFORMS
PROPAGATION DELAY TIMES
INVERTING AND NONINVERTING OUTPUTS

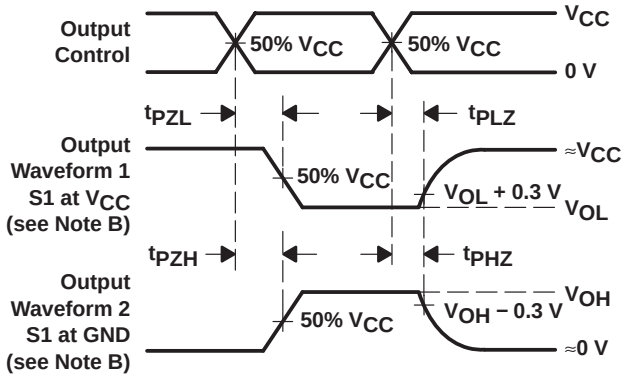


VOLTAGE WAVEFORMS
ENABLE AND DISABLE TIMES
LOW- AND HIGH-LEVEL ENABLING

NOTES: A. $C_L$ includes probe and jig capacitance.
B. Waveform 1 is for an output with internal conditions such that the output is low, except when disabled by the output control.
Waveform 2 is for an output with internal conditions such that the output is high, except when disabled by the output control.
C. All input pulses are supplied by generators having the following characteristics: PRR ≤ 1 MHz, $Z_O$ = 50 Ω, $t_r$ ≤ 3 ns, $t_f$ ≤ 3 ns.
D. The outputs are measured one at a time, with one input transition per measurement.
E. $t_{PLZ}$ and $t_{PHZ}$ are the same as $t_{dis}$.
F. $t_{PZL}$ and $t_{PZH}$ are the same as $t_{en}$.
G. $t_{PHL}$ and $t_{PLH}$ are the same as $t_{pd}$.
H. All parameters and waveforms are not applicable to all devices.

**Figure 1. Load Circuit and Voltage Waveforms**

## PACKAGING INFORMATION

| Orderable Device | Status (1) | Package Type | Package Drawing | Pins | Package Qty | Eco Plan (2) | Lead finish/ Ball material (6) | MSL Peak Temp (3) | Op Temp (°C) | Device Marking (4/5) | Samples |
|---|---|---|---|---|---|---|---|---|---|---|---|
| SN74LV8151DGVR | ACTIVE | TVSOP | DGV | 24 | 2000 | RoHS & Green | NIPDAU | Level-1-260C-UNLIM | -40 to 85 | LV8151 | Samples |
| SN74LV8151DGVRE4 | ACTIVE | TVSOP | DGV | 24 | 2000 | RoHS & Green | NIPDAU | Level-1-260C-UNLIM | -40 to 85 | LV8151 | Samples |
| SN74LV8151DW | ACTIVE | SOIC | DW | 24 | 25 | RoHS & Green | NIPDAU | Level-1-260C-UNLIM | -40 to 85 | LV8151 | Samples |
| SN74LV8151DWR | ACTIVE | SOIC | DW | 24 | 2000 | RoHS & Green | NIPDAU | Level-1-260C-UNLIM | -40 to 85 | LV8151 | Samples |
| SN74LV8151PW | ACTIVE | TSSOP | PW | 24 | 60 | RoHS & Green | NIPDAU | Level-1-260C-UNLIM | -40 to 85 | LV8151 | Samples |
| SN74LV8151PWG4 | ACTIVE | TSSOP | PW | 24 | 60 | RoHS & Green | NIPDAU | Level-1-260C-UNLIM | -40 to 85 | LV8151 | Samples |
| SN74LV8151PWR | ACTIVE | TSSOP | PW | 24 | 2000 | RoHS & Green | NIPDAU | Level-1-260C-UNLIM | -40 to 85 | LV8151 | Samples |
| SN74LV8151PWRE4 | ACTIVE | TSSOP | PW | 24 | 2000 | RoHS & Green | NIPDAU | Level-1-260C-UNLIM | -40 to 85 | LV8151 | Samples |

(1) The marketing status values are defined as follows:
**ACTIVE:** Product device recommended for new designs.
**LIFEBUY:** TI has announced that the device will be discontinued, and a lifetime-buy period is in effect.
**NRND:** Not recommended for new designs. Device is in production to support existing customers, but TI does not recommend using this part in a new design.
**PREVIEW:** Device has been announced but is not in production. Samples may or may not be available.
**OBSOLETE:** TI has discontinued the production of the device.

(2) **RoHS:** TI defines "RoHS" to mean semiconductor products that are compliant with the current EU RoHS requirements for all 10 RoHS substances, including the requirement that RoHS substance do not exceed 0.1% by weight in homogeneous materials. Where designed to be soldered at high temperatures, "RoHS" products are suitable for use in specified lead-free processes. TI may reference these types of products as "Pb-Free".
**RoHS Exempt:** TI defines "RoHS Exempt" to mean products that contain lead but are compliant with EU RoHS pursuant to a specific EU RoHS exemption.
**Green:** TI defines "Green" to mean the content of Chlorine (Cl) and Bromine (Br) based flame retardants meet JS709B low halogen requirements of <=1000ppm threshold. Antimony trioxide based flame retardants must also meet the <=1000ppm threshold requirement.

(3) MSL, Peak Temp. - The Moisture Sensitivity Level rating according to the JEDEC industry standard classifications, and peak solder temperature.

(4) There may be additional marking, which relates to the logo, the lot trace code information, or the environmental category on the device.

(5) Multiple Device Markings will be inside parentheses. Only one Device Marking contained in parentheses and separated by a "~" will appear on a device. If a line is indented then it is a continuation of the previous line and the two combined represent the entire Device Marking for that device.

(6) Lead finish/Ball material - Orderable Devices may have multiple material finish options. Finish options are separated by a vertical ruled line. Lead finish/Ball material values may wrap to two lines if the finish value exceeds the maximum column width.

**Important Information and Disclaimer:**The information provided on this page represents TI's knowledge and belief as of the date that it is provided. TI bases its knowledge and belief on information provided by third parties, and makes no representation or warranty as to the accuracy of such information. Efforts are underway to better integrate information from third parties. TI has taken and continues to take reasonable steps to provide representative and accurate information but may not have conducted destructive testing or chemical analysis on incoming materials and chemicals. TI and TI suppliers consider certain information to be proprietary, and thus CAS numbers and other limited information may not be available for release.

In no event shall TI's liability arising out of such information exceed the total purchase price of the TI part(s) at issue in this document sold by TI to Customer on an annual basis.

## TAPE AND REEL INFORMATION

REEL DIMENSIONS

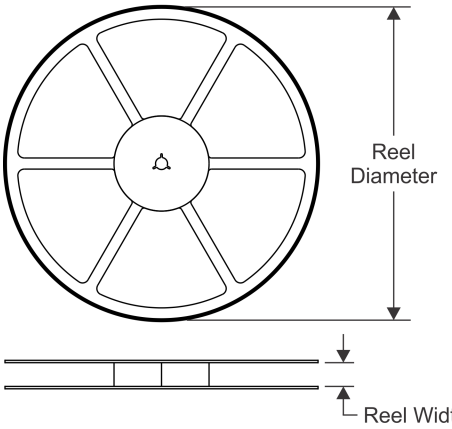


TAPE DIMENSIONS

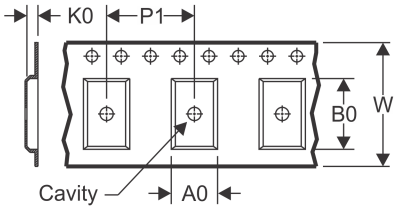


| | |
|---|---|
| A0 | Dimension designed to accommodate the component width |
| B0 | Dimension designed to accommodate the component length |
| K0 | Dimension designed to accommodate the component thickness |
| W | Overall width of the carrier tape |
| P1 | Pitch between successive cavity centers |

QUADRANT ASSIGNMENTS FOR PIN 1 ORIENTATION IN TAPE

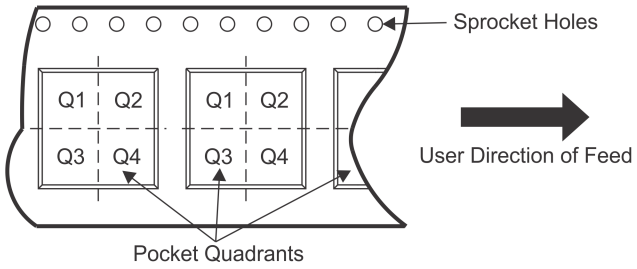


*All dimensions are nominal

| Device | Package Type | Package Drawing | Pins | SPQ | Reel Diameter (mm) | Reel Width W1 (mm) | A0 (mm) | B0 (mm) | K0 (mm) | P1 (mm) | W (mm) | Pin1 Quadrant |
|---|---|---|---|---|---|---|---|---|---|---|---|---|
| SN74LV8151DGVR | TVSOP | DGV | 24 | 2000 | 330.0 | 12.4 | 6.9 | 5.6 | 1.6 | 8.0 | 12.0 | Q1 |
| SN74LV8151DWR | SOIC | DW | 24 | 2000 | 330.0 | 24.4 | 10.75 | 15.7 | 2.7 | 12.0 | 24.0 | Q1 |
| SN74LV8151PWR | TSSOP | PW | 24 | 2000 | 330.0 | 16.4 | 6.95 | 8.3 | 1.6 | 8.0 | 16.0 | Q1 |

TAPE AND REEL BOX DIMENSIONS

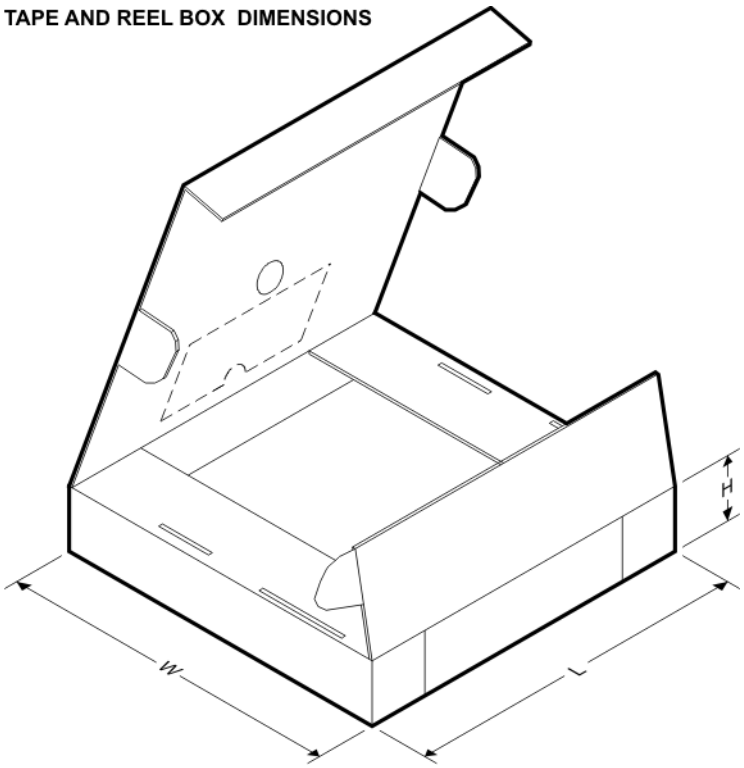


*All dimensions are nominal

| Device | Package Type | Package Drawing | Pins | SPQ | Length (mm) | Width (mm) | Height (mm) |
|---|---|---|---|---|---|---|---|
| SN74LV8151DGVR | TVSOP | DGV | 24 | 2000 | 853.0 | 449.0 | 35.0 |
| SN74LV8151DWR | SOIC | DW | 24 | 2000 | 350.0 | 350.0 | 43.0 |
| SN74LV8151PWR | TSSOP | PW | 24 | 2000 | 853.0 | 449.0 | 35.0 |

## TUBE

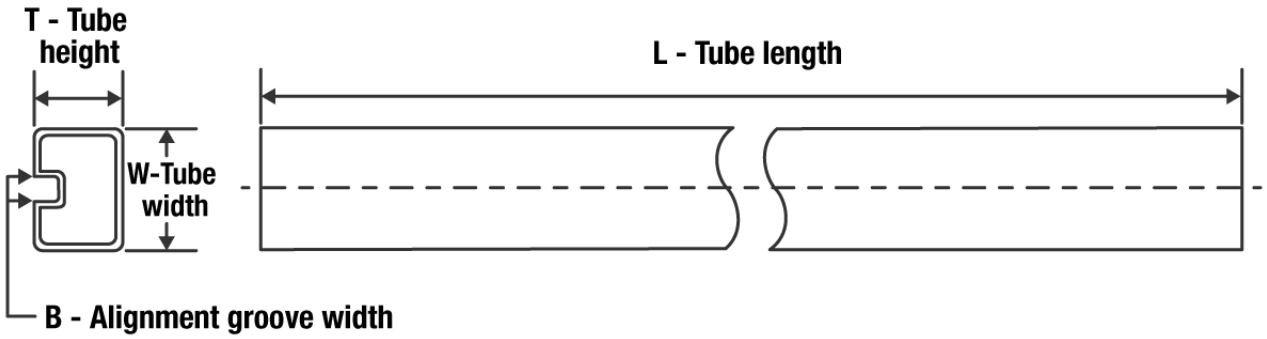


*All dimensions are nominal

| Device | Package Name | Package Type | Pins | SPQ | L (mm) | W (mm) | T (µm) | B (mm) |
|---|---|---|---|---|---|---|---|---|
| SN74LV8151DW | DW | SOIC | 24 | 25 | 506.98 | 12.7 | 4826 | 6.6 |
| SN74LV8151PW | PW | TSSOP | 24 | 60 | 530 | 10.2 | 3600 | 3.5 |
| SN74LV8151PWG4 | PW | TSSOP | 24 | 60 | 530 | 10.2 | 3600 | 3.5 |

**DGV (R-PDSO-G**)** **PLASTIC SMALL-OUTLINE**

**24 PINS SHOWN**

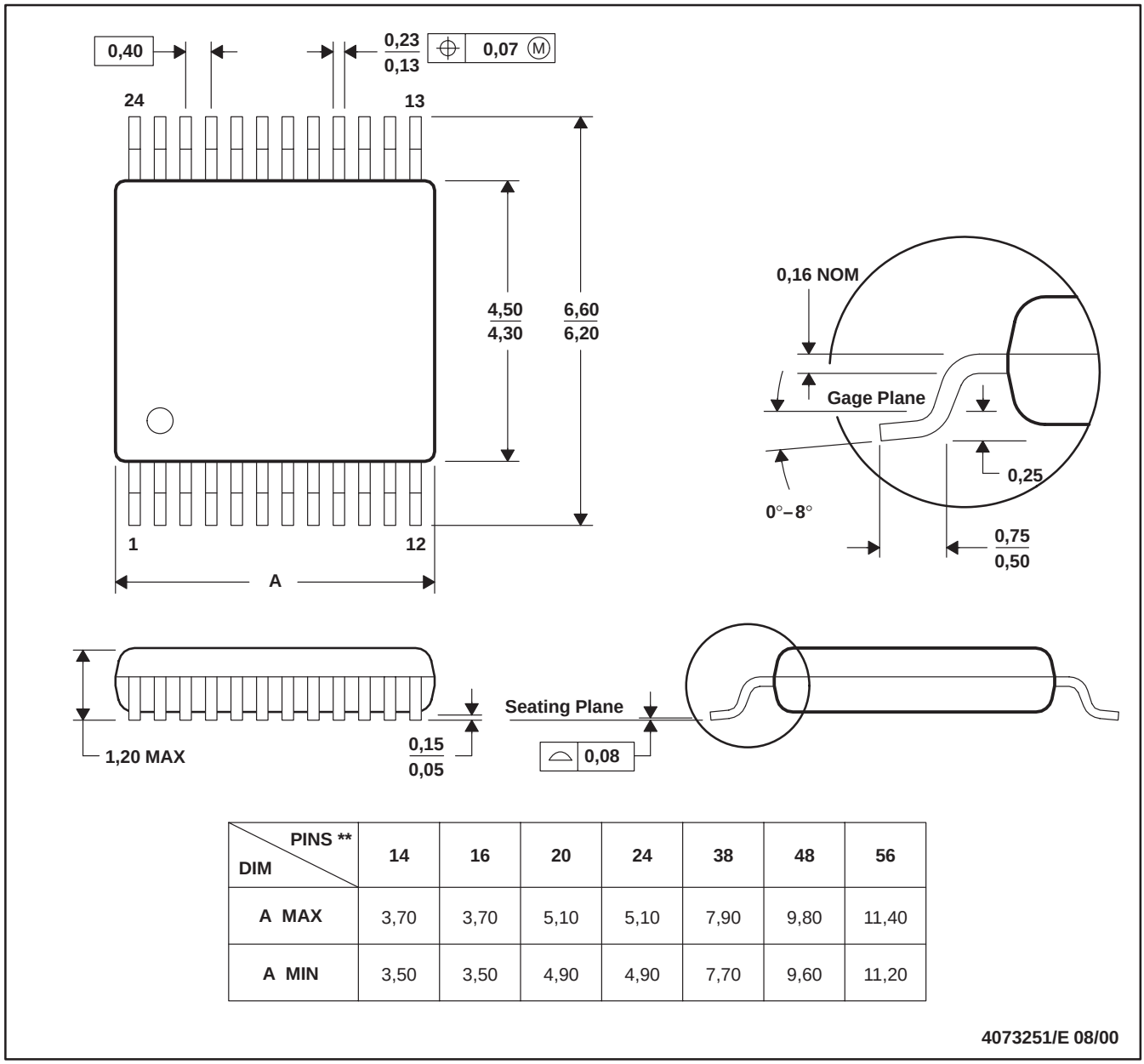


| DIM \ PINS ** | 14 | 16 | 20 | 24 | 38 | 48 | 56 |
|---|---|---|---|---|---|---|---|
| A MAX | 3,70 | 3,70 | 5,10 | 5,10 | 7,90 | 9,80 | 11,40 |
| A MIN | 3,50 | 3,50 | 4,90 | 4,90 | 7,70 | 9,60 | 11,20 |

**4073251/E 08/00**

NOTES: A. All linear dimensions are in millimeters.
B. This drawing is subject to change without notice.
C. Body dimensions do not include mold flash or protrusion, not to exceed 0,15 per side.
D. Falls within JEDEC: 24/48 Pins – MO-153
14/16/20/56 Pins – MO-194

DW (R–PDSO–G24) PLASTIC SMALL OUTLINE

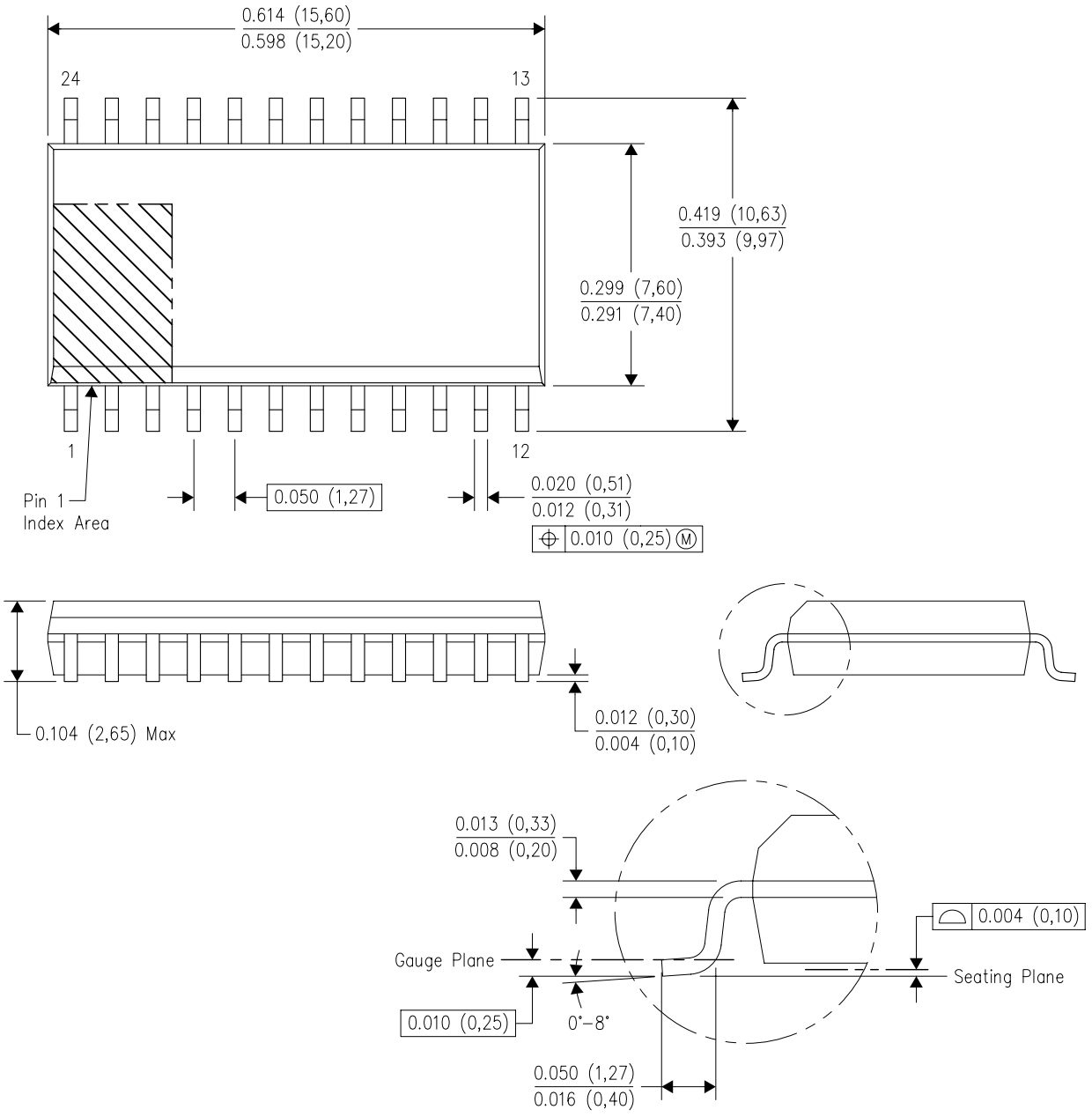


NOTES:
A. All linear dimensions are in inches (millimeters). Dimensioning and tolerancing per ASME Y14.5M–1994.
B. This drawing is subject to change without notice.
C. Body dimensions do not include mold flash or protrusion not to exceed 0.006 (0,15).
D. Falls within JEDEC MS–013 variation AD.

# PACKAGE OUTLINE

## PW0024A

## TSSOP - 1.2 mm max height

SMALL OUTLINE PACKAGE

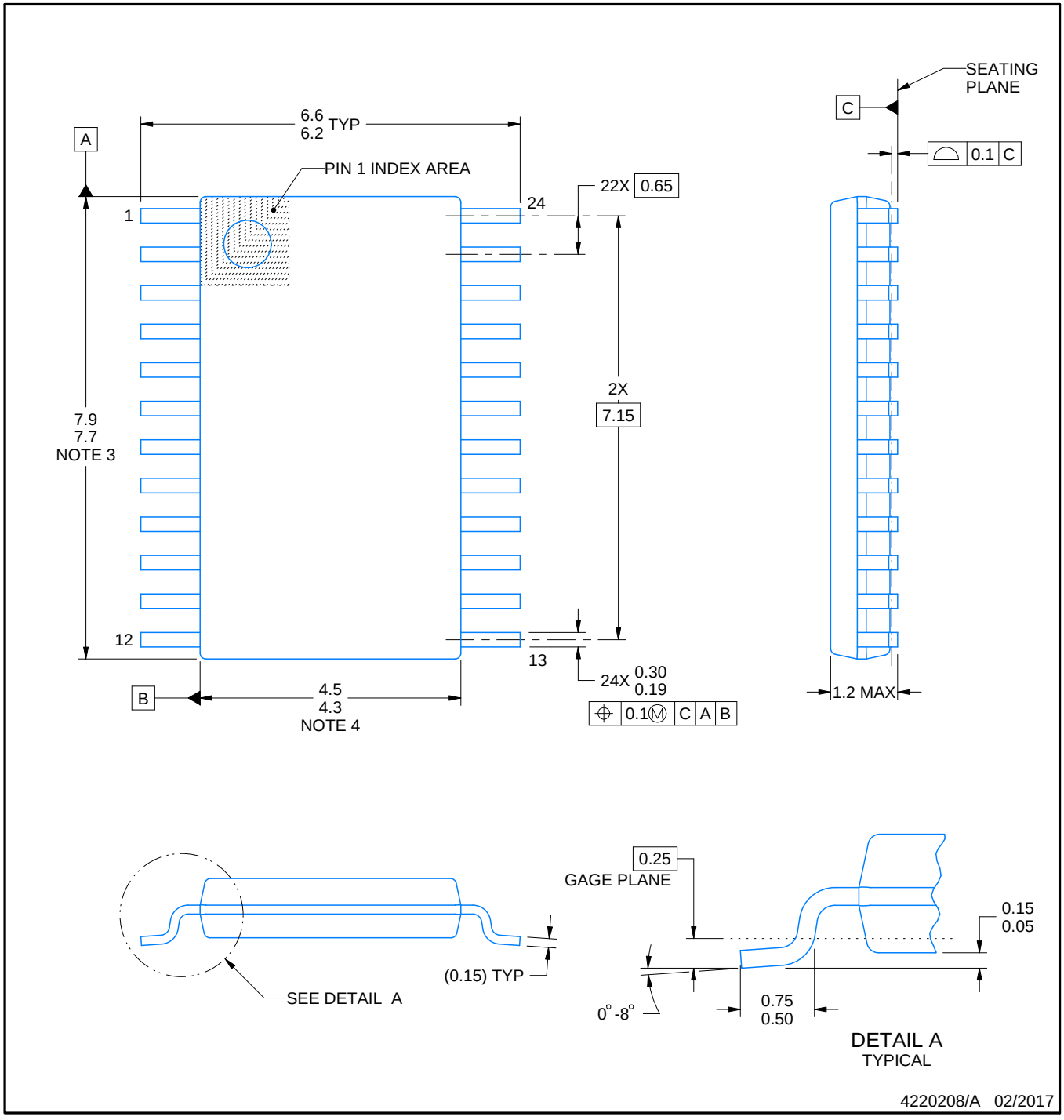


NOTES:

1. All linear dimensions are in millimeters. Any dimensions in parenthesis are for reference only. Dimensioning and tolerancing per ASME Y14.5M.
2. This drawing is subject to change without notice.
3. This dimension does not include mold flash, protrusions, or gate burrs. Mold flash, protrusions, or gate burrs shall not exceed 0.15 mm per side.
4. This dimension does not include interlead flash. Interlead flash shall not exceed 0.25 mm per side.
5. Reference JEDEC registration MO-153.

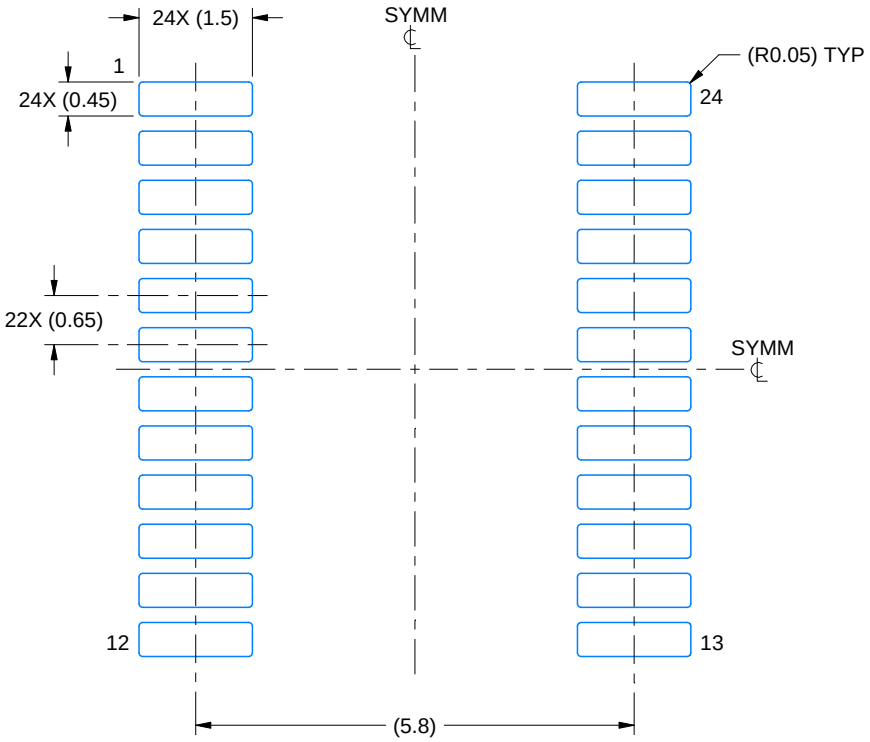


LAND PATTERN EXAMPLE
EXPOSED METAL SHOWN
SCALE: 10X

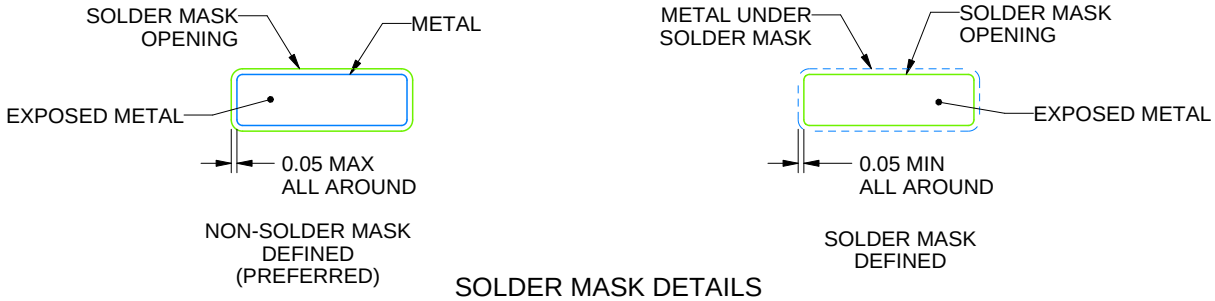


SOLDER MASK DETAILS

4220208/A 02/2017

NOTES: (continued)

6. Publication IPC-7351 may have alternate designs.
7. Solder mask tolerances between and around signal pads can vary based on board fabrication site.

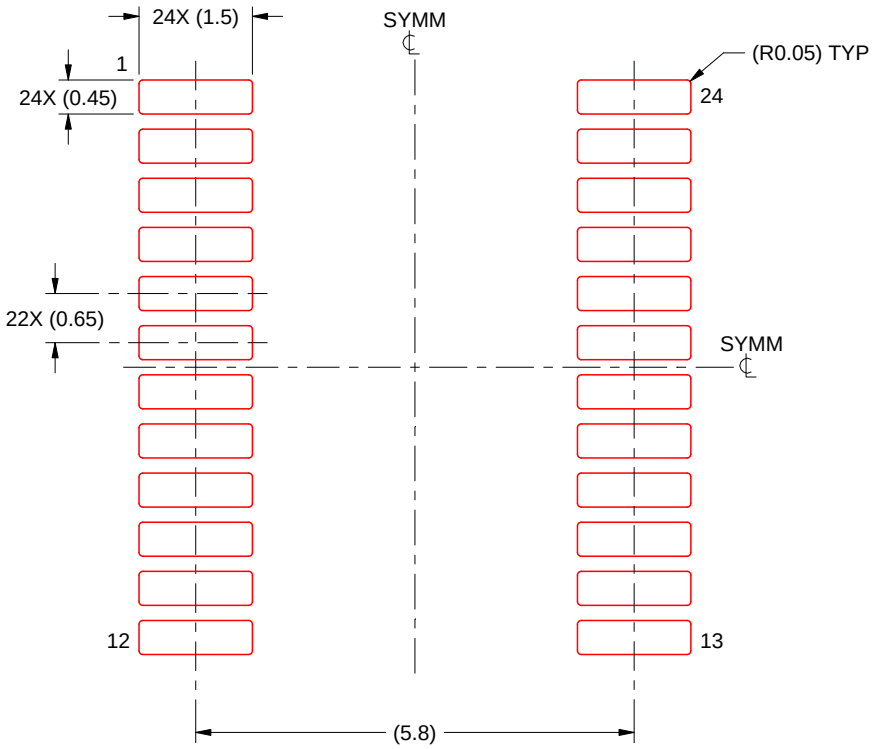


SOLDER PASTE EXAMPLE
BASED ON 0.125 mm THICK STENCIL
SCALE: 10X

4220208/A 02/2017

NOTES: (continued)

8. Laser cutting apertures with trapezoidal walls and rounded corners may offer better paste release. IPC-7525 may have alternate design recommendations.
9. Board assembly site may have different recommendations for stencil design.

# IMPORTANT NOTICE AND DISCLAIMER

TI PROVIDES TECHNICAL AND RELIABILITY DATA (INCLUDING DATA SHEETS), DESIGN RESOURCES (INCLUDING REFERENCE DESIGNS), APPLICATION OR OTHER DESIGN ADVICE, WEB TOOLS, SAFETY INFORMATION, AND OTHER RESOURCES “AS IS” AND WITH ALL FAULTS, AND DISCLAIMS ALL WARRANTIES, EXPRESS AND IMPLIED, INCLUDING WITHOUT LIMITATION ANY IMPLIED WARRANTIES OF MERCHANTABILITY, FITNESS FOR A PARTICULAR PURPOSE OR NON-INFRINGEMENT OF THIRD PARTY INTELLECTUAL PROPERTY RIGHTS.

These resources are intended for skilled developers designing with TI products. You are solely responsible for (1) selecting the appropriate TI products for your application, (2) designing, validating and testing your application, and (3) ensuring your application meets applicable standards, and any other safety, security, regulatory or other requirements.

These resources are subject to change without notice. TI grants you permission to use these resources only for development of an application that uses the TI products described in the resource. Other reproduction and display of these resources is prohibited. No license is granted to any other TI intellectual property right or to any third party intellectual property right. TI disclaims responsibility for, and you will fully indemnify TI and its representatives against, any claims, damages, costs, losses, and liabilities arising out of your use of these resources.

TI’s products are provided subject to TI’s Terms of Sale or other applicable terms available either on ti.com or provided in conjunction with such TI products. TI’s provision of these resources does not expand or otherwise alter TI’s applicable warranties or warranty disclaimers for TI products.

TI objects to and rejects any additional or different terms you may have proposed.

Mailing Address: Texas Instruments, Post Office Box 655303, Dallas, Texas 75265
Copyright © 2022, Texas Instruments Incorporated