SNx4LVC373A Octal Transparent D-Type Latches With 3-State Outputs

1 Features

- Operate From 1.65 V to 3.6 V
- Inputs Accept Voltages to 5.5 V
- Max t_{pd} of 6.8 ns at 3.3 V
- Typical V_{OLP} (Output Ground Bounce) <0.8 V at V_{CC} = 3.3 V, T_A = 25°C
- Typical V_{OHV} (Output V_{OH} Undershoot) >2 V at V_{CC} = 3.3 V, T_A = 25°C
- Supports Mixed-Mode Signal Operation on All Ports (5-V Input/Output Voltage With 3.3-V V_{CC})
- I_{off} Supports Live-Insertion, Partial-Power-Down Mode, and Back-Drive Protection
- Latch-Up Performance Exceeds 250 mA Per JESD 17
- ESD Protection Exceeds JESD 22
  - 2000-V Human-Body Model (A114-A)
  - 200-V Machine Model (A115-A)
  - 1000-V Charged-Device Model (C101)
- On Products Compliant to MIL-PRF-38535, All Parameters Are Tested Unless Otherwise Noted. On All Other Products, Production Processing Does Not Necessarily Include Testing of All Parameters.

2 Applications

- Network Switches
- TV Set-top Boxes
- Motor Drives
- PCs and Notebooks

3 Description

The SN54LVC373A octal transparent D-type latch is designed for 2.7-V to 3.6-V V_{CC} operation, and the SN74LVC373A octal transparent D-type latch is designed for 1.65-V to 3.6-V V_{CC} operation.

Device Information(1)

PART NUMBER	PACKAGE	BODY SIZE (NOM)
SNx4LVC373A	SSOP (20)	7.20 mm × 5.30 mm
	SOIC (20)	12.80 mm × 7.50 mm
	PDIP (20)	24.33 mm 6.35 mm
	TSSOP (20)	6.50 mm × 4.40 mm
	VQFN (20)	4.50 mm × 3.50 mm

(1) For all available packages, see the orderable addendum at the end of the data sheet.

4 Simplified Schematic

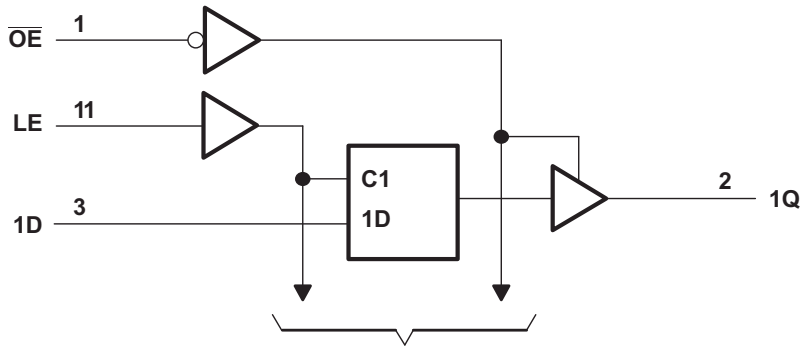

Pin numbers shown are for the DB, DGV, DW, FK, J, N, NS, PW, RGY, and W packages.

An IMPORTANT NOTICE at the end of this data sheet addresses availability, warranty, changes, use in safety-critical applications, intellectual property matters and other important disclaimers. PRODUCTION DATA.

Table of Contents

1 Features ... 1
2 Applications ... 1
3 Description ... 1
4 Simplified Schematic ... 1
5 Revision History ... 2
6 Pin Configuration and Functions ... 3
7 Specifications ... 4
7.1 Absolute Maximum Ratings ... 4
7.2 Handling Ratings ... 4
7.3 Recommended Operating Conditions ... 5
7.4 Thermal Information ... 5
7.5 Electrical Characteristics ... 6
7.6 Timing Requirements, SN54LVC373A ... 6
7.7 Timing Requirements, SN74LVC373A ... 6
7.8 Switching Characteristics, SN54LVC373A ... 7
7.9 Switching Characteristics, SN74LVC373A ... 7
7.10 Operating Characteristics ... 7
7.11 Typical Characteristics ... 7
8 Parameter Measurement Information ... 8
9 Detailed Description ... 9
9.1 Overview ... 9
9.2 Functional Block Diagram ... 9
9.3 Feature Description ... 10
9.4 Device Functional Modes ... 10
10 Application and Implementation ... 11
10.1 Application Information ... 11
10.2 Typical Application ... 11
11 Power Supply Recommendations ... 12
12 Layout ... 12
12.1 Layout Guidelines ... 12
12.2 Layout Example ... 12
13 Device and Documentation Support ... 13
13.1 Related Links ... 13
13.2 Trademarks ... 13
13.3 Electrostatic Discharge Caution ... 13
13.4 Glossary ... 13
14 Mechanical, Packaging, and Orderable Information ... 13

5 Revision History

NOTE: Page numbers for previous revisions may differ from page numbers in the current version.

Changes from Revision S (May 2005) to Revision T	Page
• Updated document to new TI data sheet format.	1
• Removed Ordering Information table.	1
• Changed I_{off} Feature.	1
• Added Military Disclaimer to Features.	1
• Added Applications.	1
• Added Handling Ratings table.	4
• Changed MAX ambient temperature from 85°C to 125°C.	5
• Added Thermal Information table.	5
• Added Typical Characteristics.	7
• Added Detailed Description section	9

Copyright © 1993–2014, Texas Instruments Incorporated

6 Pin Configuration and Functions

SN54LVC373A . . . J OR W PACKAGE
SN74LVC373A . . . DB, DGV, DW, N, NS, OR PW PACKAGE
(TOP VIEW)

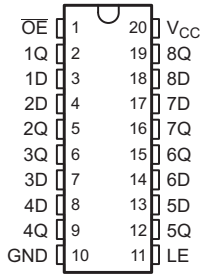

SN74LVC373A . . . RGY PACKAGE
(TOP VIEW)

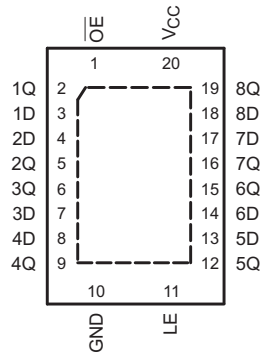

SN54LVC373A . . . FK PACKAGE
(TOP VIEW)

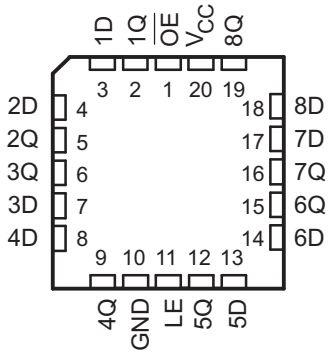

Pin Functions

PIN		I/O	DESCRIPTION
NO.	NAME		
1	$\overline{OE}$	I	Enable Pin
2	1Q	O	Output 1
3	1D	I	Input 1
4	2D	I	Input 2
5	2Q	O	Output 2
6	3Q	O	Output 3
7	3D	I	Input 3
8	4D	I	Input 4
9	4Q	O	Output 4
10	GND	–	Ground Pin
11	LE	I	Latch Enable
12	5Q	O	Output 5
13	5D	I	Input 5
14	6D	I	Input 6
15	6Q	O	Output 6
16	7Q	O	Output 7
17	7D	I	Input 7
18	8D	I	Input 8
19	8Q	O	Output 8
20	VCC	–	Power Pin

GQN OR ZQN PACKAGE
(TOP VIEW)

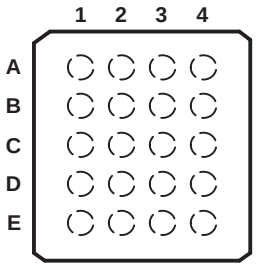

Table 1. Pin Assignments

	1	2	3	4
A	1Q	$\overline{OE}$	V_{CC}	8Q
B	2D	7D	1D	8D
C	3Q	2Q	6Q	7Q
D	4D	5D	3D	6D
E	GND	4Q	LE	5Q

Copyright © 1993–2014, Texas Instruments Incorporated

7 Specifications

7.1 Absolute Maximum Ratings(1)

over operating free-air temperature range (unless otherwise noted)

			MIN	MAX	UNIT
V_{CC}	Supply voltage range		–0.5	6.5	V
V_I	Input voltage range(2)		–0.5	6.5	V
V_O	Voltage range applied to any output in the high-impedance or power-off state(2)		–0.5	6.5	V
V_O	Voltage range applied to any output in the high or low state(2)(3)		–0.5	V_{CC} + 0.5	V
I_{IK}	Input clamp current	V_I < 0		–50	mA
I_{OK}	Output clamp current	V_O < 0		–50	mA
I_O	Continuous output current			±50	mA
	Continuous current through V_{CC} or GND			±100	mA

(1) Stresses beyond those listed under *Absolute Maximum Ratings* may cause permanent damage to the device. These are stress ratings only, and functional operation of the device at these or any other conditions beyond those indicated under *Recommended Operating Conditions* is not implied. Exposure to absolute-maximum-rated conditions for extended periods may affect device reliability.
(2) The input and output negative-voltage ratings may be exceeded if the input and output current ratings are observed.
(3) The value of V_{CC} is provided in the *Recommended Operating Conditions* table.

7.2 Handling Ratings

			MIN	MAX	UNIT
T_{stg}	Storage temperature range		–65	150	°C
$V_{(ESD)}$	Electrostatic discharge	Human body model (HBM), per ANSI/ESDA/JEDEC JS-001, all pins(1)	0	2000	V
		Charged device model (CDM), per JEDEC specification JESD22-C101, all pins(2)	0	1000	

(1) JEDEC document JEP155 states that 500-V HBM allows safe manufacturing with a standard ESD control process.
(2) JEDEC document JEP157 states that 250-V CDM allows safe manufacturing with a standard ESD control process.

Copyright © 1993–2014, Texas Instruments Incorporated

7.3 Recommended Operating Conditions

over operating free-air temperature range (unless otherwise noted)(1)

			SN54LVC373A		SN74LVC373A		UNIT
			MIN	MAX	MIN	MAX	
V_{CC}	Supply voltage	Operating	2	3.6	1.65	3.6	V
		Data retention only	1.5		1.5		
V_{IH}	High-level input voltage	V_{CC} = 1.65 V to 1.95 V			0.65 × V_{CC}		V
		V_{CC} = 2.3 V to 2.7 V			1.7		
		V_{CC} = 2.7 V to 3.6 V	2		2		
V_{IL}	Low-level input voltage	V_{CC} = 1.65 V to 1.95 V				0.35 × V_{CC}	V
		V_{CC} = 2.3 V to 2.7 V				0.7	
		V_{CC} = 2.7 V to 3.6 V		0.8		0.8	
V_I	Input voltage		0	5.5	0	5.5	V
V_O	Output voltage	High or low state	0	V_{CC}	0	V_{CC}	V
		3-state	0	5.5	0	5.5	
I_{OH}	High-level output current	V_{CC} = 1.65 V				–4	mA
		V_{CC} = 2.3 V				–8	
		V_{CC} = 2.7 V		–12		–12	
		V_{CC} = 3 V		–24		–24	
I_{OL}	Low-level output current	V_{CC} = 1.65 V				4	mA
		V_{CC} = 2.3 V				8	
		V_{CC} = 2.7 V		12		12	
		V_{CC} = 3 V		24		24	
Δt/Δv	Input transition rise or fall rate			10		10	ns/V
T_A	Operating free-air temperature		–55	125	–40	125	°C

(1) All unused inputs of the device must be held at V_{CC} or GND to ensure proper device operation. Refer to the TI application report, *Implications of Slow or Floating CMOS Inputs*, (SCBA004).

7.4 Thermal Information

THERMAL METRIC(1)		SN74LVC373A	UNIT
		PW	
		20 PINS	
$R_{\theta JA}$	Junction-to-ambient thermal resistance	102.5	°C/W
$R_{\theta JC(top)}$	Junction-to-case (top) thermal resistance	35.9	
$R_{\theta JB}$	Junction-to-board thermal resistance	53.5	
ψ_{JT}	Junction-to-top characterization parameter	2.2	
ψ_{JB}	Junction-to-board characterization parameter	52.9	
$R_{\theta JC(bot)}$	Junction-to-case (bottom) thermal resistance	n/a	

(1) For more information about traditional and new thermal metrics, see the *IC Package Thermal Metrics* application report, SPRA953.

Copyright © 1993–2014, Texas Instruments Incorporated

7.5 Electrical Characteristics

over recommended operating free-air temperature range (unless otherwise noted)

PARAMETER	TEST CONDITIONS		V_{CC}	SN54LVC373A			SN74LVC373A			UNIT
				MIN	TYP(1)	MAX	MIN	TYP(1)	MAX	
V_{OH}	I_{OH} = –100 µA		1.65 V to 3.6 V				V_{CC} – 0.2			V
			2.7 V to 3.6 V	V_{CC} – 0.2						
	I_{OH} = –4 mA		1.65 V				1.2			
	I_{OH} = –8 mA		2.3 V				1.7			
	I_{OH} = –12 mA		2.7 V	2.2			2.2			
			3 V	2.4			2.4			
	I_{OH} = –24 mA		3 V	2.2			2.2			
V_{OL}	I_{OL} = 100 µA		1.65 V to 3.6 V						0.2	V
			2.7 V to 3.6 V			0.2				
	I_{OL} = 4 mA		1.65 V						0.45	
	I_{OL} = 8 mA		2.3 V						0.7	
	I_{OL} = 12 mA		2.7 V			0.4			0.4	
	I_{OL} = 24 mA		3 V			0.55			0.55	
I_I	V_I = 0 to 5.5 V		3.6 V			±5			±5	µA
I_{off}	V_I or V_O = 5.5 V		0						±10	µA
I_{OZ}	V_O = 0 to 5.5 V		3.6 V			±15			±10	µA
I_{CC}	V_I = V_{CC} or GND	I_O = 0	3.6 V			10			10	µA
	3.6 V ≤ V_I ≤ 5.5 V(2)					10			10	
ΔI_{CC}	One input at V_{CC} – 0.6 V, Other inputs at V_{CC} or GND		2.7 V to 3.6 V			500			500	µA
C_i	V_I = V_{CC} or GND		3.3 V		4	12		4		pF
C_o	V_O = V_{CC} or GND		3.3 V		5.5	12		5.5		pF

(1) All typical values are at V_{CC} = 3.3 V, T_A = 25°C.
(2) This applies in the disabled state only.

7.6 Timing Requirements, SN54LVC373A

over recommended operating free-air temperature range (unless otherwise noted) (see Figure 3)

PARAMETER		SN54LVC373A				UNIT
		V_{CC} = 2.7 V		V_{CC} = 3.3 V ± 0.3 V		
		MIN	MAX	MIN	MAX	
t_w	Pulse duration, LE high	3.3		3.3		ns
t_{su}	Setup time, data before LE↓	2		2		ns
t_h	Hold time, data after LE↓	2		2		ns

7.7 Timing Requirements, SN74LVC373A

over recommended operating free-air temperature range (unless otherwise noted) (see Figure 3)

PARAMETER		SN74LVC373A								UNIT
		V_{CC} = 1.8 V ± 0.15 V		V_{CC} = 2.5 V ± 0.2 V		V_{CC} = 2.7 V		V_{CC} = 3.3 V ± 0.3 V		
		MIN	MAX	MIN	MAX	MIN	MAX	MIN	MAX	
t_w	Pulse duration, LE high	9		4		3.3		3.3		ns
t_{su}	Setup time, data before LE↓	6		4		2		2		ns
t_h	Hold time, data after LE↓	4		2		1.5		1.5		ns

Copyright © 1993–2014, Texas Instruments Incorporated

7.8 Switching Characteristics, SN54LVC373A

over recommended operating free-air temperature range (unless otherwise noted) (see Figure 3)

PARAMETER	FROM (INPUT)	TO (OUTPUT)	SN54LVC373A				UNIT
			V_{CC} = 2.7 V		V_{CC} = 3.3 V ± 0.3 V		
			MIN	MAX	MIN	MAX	
t_{pd}	D	Q		8.5	1	7.5	ns
	LE			9.5	1	8.5	
t_{en}	$\overline{OE}$	Q		8.7	1	7.7	ns
t_{dis}	$\overline{OE}$	Q		8	0.5	7	ns

7.9 Switching Characteristics, SN74LVC373A

over recommended operating free-air temperature range (unless otherwise noted) (see Figure 3)

PARAMETER	FROM (INPUT)	TO (OUTPUT)	SN74LVC373A								UNIT
			V_{CC} = 1.8 V ± 0.15 V		V_{CC} = 2.5 V ± 0.2 V		V_{CC} = 2.7 V		V_{CC} = 3.3 V ± 0.3 V		
			MIN	MAX	MIN	MAX	MIN	MAX	MIN	MAX	
t_{pd}	D	Q	1	19.1	1	9.6		7.8	1.5	6.8	ns
	LE		1	22.8	1	10.5		8.2	2	7.6	
t_{en}	$\overline{OE}$	Q	1	20	1	10.5		8.7	1.5	7.7	ns
t_{dis}	$\overline{OE}$	Q	1	19.3	1	7.8		7.6	1.5	7	ns
$t_{sk(o)}$				1		1		1		1	ns

7.10 Operating Characteristics

T_A = 25°C

PARAMETER			TEST CONDITIONS	V_{CC} = 1.8 V	V_{CC} = 2.5 V	V_{CC} = 3.3 V	UNIT
				TYP	TYP	TYP	
C_{pd}	Power dissipation capacitance per latch	Outputs enabled	f = 10 MHz	61	56	46	pF
		Outputs disabled		3	3	3	

7.11 Typical Characteristics

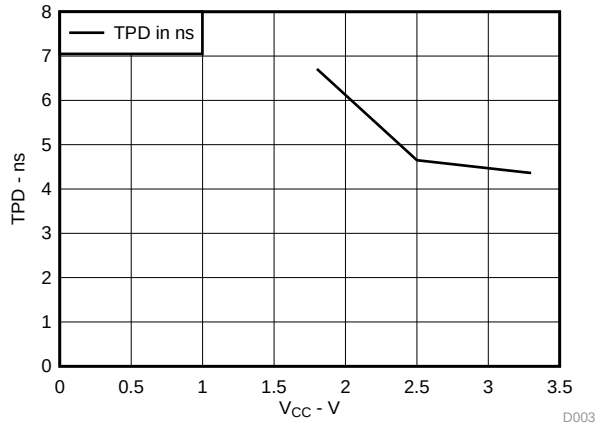

Figure 1. SN74LVC373A LE to Q TDP V_{CC} vs TPD at 25°C

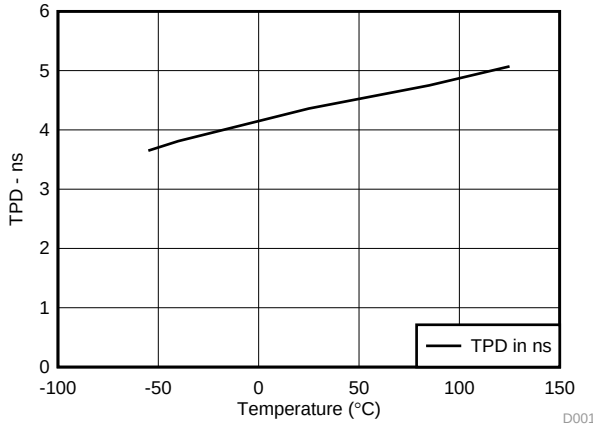

Figure 2. SN74LVC373A LE to Q Across Temperature at 3.3-V V_{CC}

Copyright © 1993–2014, Texas Instruments Incorporated

8 Parameter Measurement Information

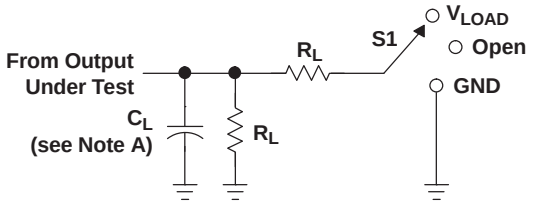

LOAD CIRCUIT

TEST	S1
t_{PLH}/t_{PHL}	Open
t_{PLZ}/t_{PZL}	V_{LOAD}
t_{PHZ}/t_{PZH}	GND

V_{CC}	INPUTS		V_M	V_{LOAD}	C_L	R_L	V_Δ
	V_I	t_r/t_f					
1.8 V ± 0.15 V	V_{CC}	≤2 ns	$V_{CC}/2$	$2 \times V_{CC}$	30 pF	1 kΩ	0.15 V
2.5 V ± 0.2 V	V_{CC}	≤2 ns	$V_{CC}/2$	$2 \times V_{CC}$	30 pF	500 Ω	0.15 V
2.7 V	2.7 V	≤2.5 ns	1.5 V	6 V	50 pF	500 Ω	0.3 V
3.3 V ± 0.3 V	2.7 V	≤2.5 ns	1.5 V	6 V	50 pF	500 Ω	0.3 V

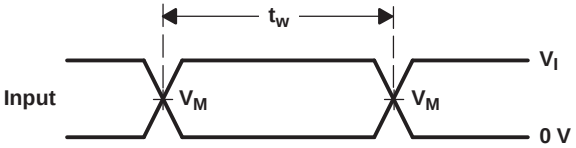

VOLTAGE WAVEFORMS
PULSE DURATION

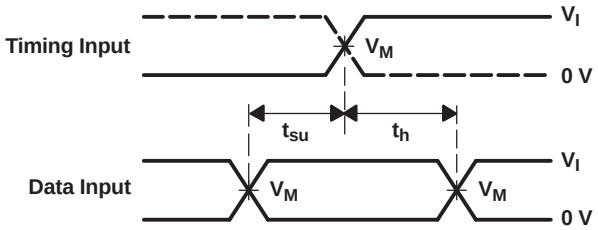

VOLTAGE WAVEFORMS
SETUP AND HOLD TIMES

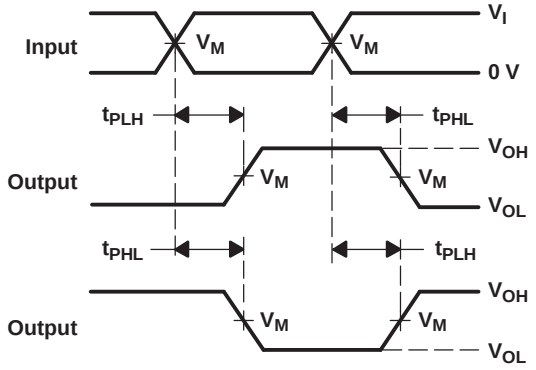

VOLTAGE WAVEFORMS
PROPAGATION DELAY TIMES
INVERTING AND NONINVERTING OUTPUTS

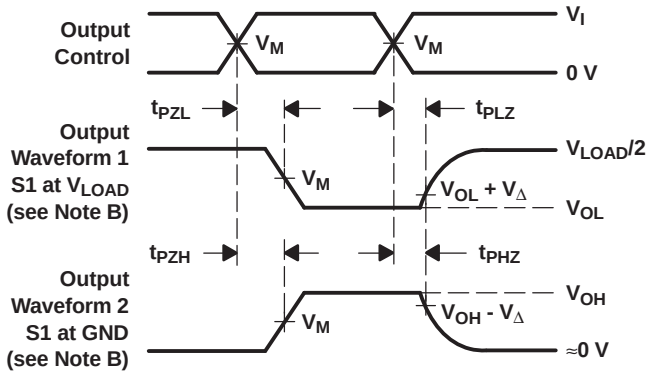

VOLTAGE WAVEFORMS
ENABLE AND DISABLE TIMES
LOW- AND HIGH-LEVEL ENABLING

NOTES: A. C_L includes probe and jig capacitance.
B. Waveform 1 is for an output with internal conditions such that the output is low, except when disabled by the output control. Waveform 2 is for an output with internal conditions such that the output is high, except when disabled by the output control.
C. All input pulses are supplied by generators having the following characteristics: PRR ≤ 10 MHz, Z_O = 50 Ω.
D. The outputs are measured one at a time, with one transition per measurement.
E. t_{PLZ} and t_{PHZ} are the same as t_{dis}.
F. t_{PZL} and t_{PZH} are the same as t_{en}.
G. t_{PLH} and t_{PHL} are the same as t_{pd}.
H. All parameters and waveforms are not applicable to all devices.

Figure 3. Load Circuit and Voltage Waveforms

Copyright © 1993–2014, Texas Instruments Incorporated

9 Detailed Description

9.1 Overview

While the latch-enable (LE) input is high, the Q outputs follow the data (D) inputs. When LE is taken low, the Q outputs are latched at the logic levels set up at the D inputs.

A buffered output-enable ($\overline{OE}$) input can be used to place the eight outputs in either a normal logic state (high or low logic levels) or the high-impedance state. In the high-impedance state, the outputs neither load nor drive the bus lines significantly. The high-impedance state and increased drive provide the capability to drive bus lines without interface or pullup components.

$\overline{OE}$ does not affect the internal operations of the latches. Old data can be retained or new data can be entered while the outputs are in the high-impedance state.

These devices are fully specified for partial-power-down applications using I_{off}. The I_{off} circuitry disables the outputs, preventing damaging current backflow through the devices when they are powered down.

To ensure the high-impedance state during power up or power down, $\overline{OE}$ should be tied to V_{CC} through a pullup resistor; the minimum value of the resistor is determined by the current-sinking capability of the driver.

Inputs can be driven from either 3.3-V or 5-V devices. This feature allows the use of these devices as translators in a mixed 3.3-V/5-V system environment.

9.2 Functional Block Diagram

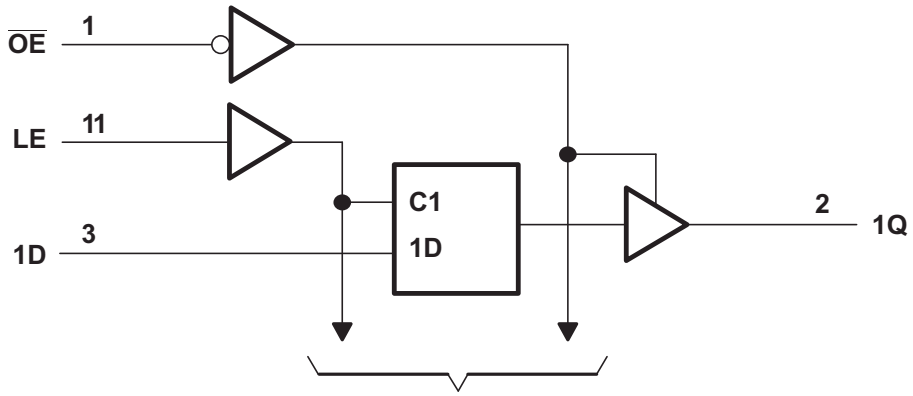

Pin numbers shown are for the DB, DGV, DW, FK, J, N, NS, PW, RGY, and W packages.

9.3 Feature Description

- Wide operating voltage range
  - Operates from 1.65 V to 3.6 V
- Allows down voltage translation
  - Inputs accept voltages to 5.5 V
- I_{off} feature
  - Allows voltages on the inputs and outputs when V_{CC} is 0 V

9.4 Device Functional Modes

Table 2. Function Table (Each Latch)

INPUTS			OUTPUT
$\overline{OE}$	LE	D	Q
L	H	H	H
L	H	L	L
L	L	X	Q_0
H	X	X	Z

Copyright © 1993–2014, Texas Instruments Incorporated

10 Application and Implementation

10.1 Application Information

The SN74LVC373A is a high-drive CMOS device that can be used for a multitude of bus-interface type applications where the data needs to be retained or latched. It can produce 24 mA of drive current at 3.3 V. Therefore, this device is ideal for driving multiple outputs and for high speed applications up to 100 Mhz. The inputs are 5.5 V tolerant allowing it to translate down to V_{CC}.

10.2 Typical Application

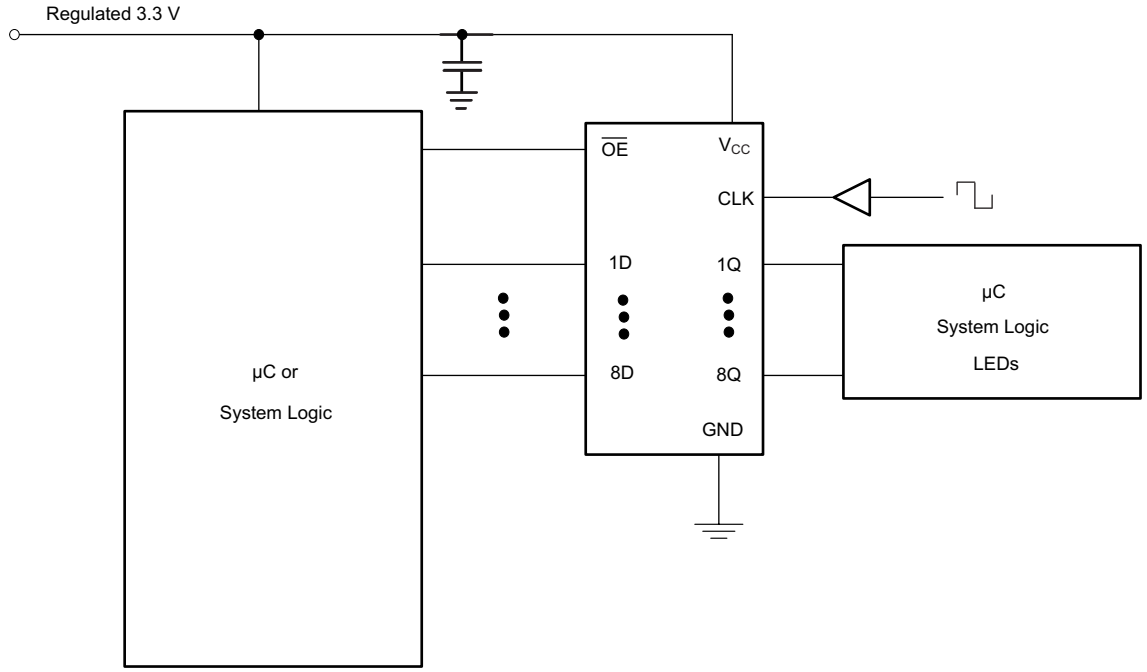

Figure 4. Typical Application Diagram

10.2.1 Design Requirements

This device uses CMOS technology and has balanced output drive. Care should be taken to avoid bus contention because it can drive currents that would exceed maximum limits. The high drive will also create fast edges into light loads; therefore, routing and load conditions should be considered to prevent ringing.

10.2.2 Detailed Design Procedure

1. Recommended Input Conditions
   - Rise time and fall time specs: See (Δt/ΔV) in the *Recommended Operating Conditions* table.
   - Specified high and low levels: See (V_{IH} and V_{IL}) in the *Recommended Operating Conditions* table.
   - Inputs are overvoltage tolerant allowing them to go as high as 5.5 V at any valid V_{CC}.
2. Recommend Output Conditions
   - Load currents should not exceed 50 mA per output and 100 mA total for the part.
   - Outputs should not be pulled above V_{CC}.

Copyright © 1993–2014, Texas Instruments Incorporated

Typical Application (continued)

10.2.3 Application Curves

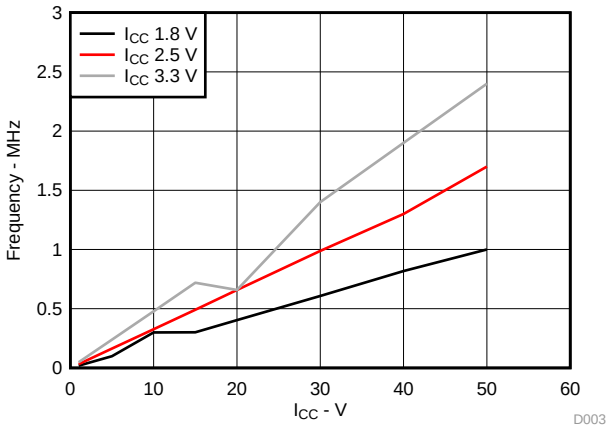

Figure 5. I_{CC} vs Frequency

11 Power Supply Recommendations

The power supply can be any voltage between the MIN and MAX supply voltage rating located in the *Recommended Operating Conditions* table.

Each V_{CC} pin should have a good bypass capacitor to prevent power disturbance. For devices with a single supply, 0.1 µf is recommended; if there are multiple V_{CC} pins, then 0.01 µf or 0.022 µf is recommended for each power pin. It is acceptable to parallel multiple bypass caps to reject different frequencies of noise. A 0.1 µf and a 1 µf are commonly used in parallel. The bypass capacitor should be installed as close to the power pin as possible for best results.

12 Layout

12.1 Layout Guidelines

When using multiple bit logic devices inputs should never float.

In many cases, functions or parts of functions of digital logic devices are unused, for example, when only two inputs of a triple-input AND gate are used or only 3 of the 4 buffer gates are used. Such input pins should not be left unconnected because the undefined voltages at the outside connections result in undefined operational states. Figure 6 specifies the rules that must be observed under all circumstances. All unused inputs of digital logic devices must be connected to a high or low bias to prevent them from floating. The logic level that should be applied to any particular unused input depends on the function of the device. Generally they will be tied to GND or V_{CC}, whichever makes more sense or is more convenient. It is generally acceptable to float outputs, unless the part is a transceiver.

12.2 Layout Example

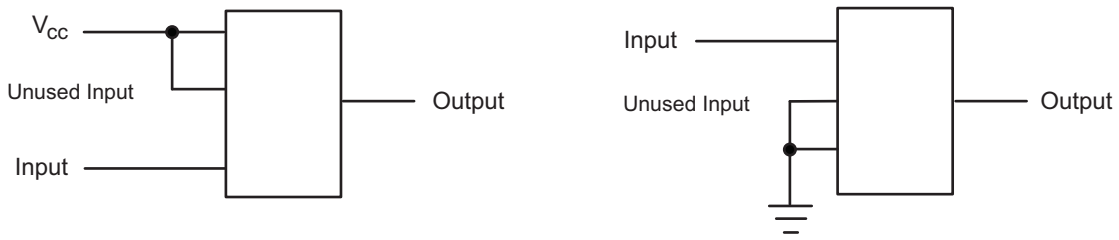

Figure 6. Layout Diagram

Copyright © 1993–2014, Texas Instruments Incorporated

13 Device and Documentation Support

13.1 Related Links

The table below lists quick access links. Categories include technical documents, support and community resources, tools and software, and quick access to sample or buy.

Table 3. Related Links

PARTS	PRODUCT FOLDER	SAMPLE & BUY	TECHNICAL DOCUMENTS	TOOLS & SOFTWARE	SUPPORT & COMMUNITY
SN54LVC373A	Click here	Click here	Click here	Click here	Click here
SN74LVC373A	Click here	Click here	Click here	Click here	Click here

13.2 Trademarks

All trademarks are the property of their respective owners.

13.3 Electrostatic Discharge Caution



These devices have limited built-in ESD protection. The leads should be shorted together or the device placed in conductive foam during storage or handling to prevent electrostatic damage to the MOS gates.

13.4 Glossary

SLYZ022 — *TI Glossary*.

This glossary lists and explains terms, acronyms, and definitions.

14 Mechanical, Packaging, and Orderable Information

The following pages include mechanical, packaging, and orderable information. This information is the most current data available for the designated devices. This data is subject to change without notice and revision of this document. For browser-based versions of this data sheet, refer to the left-hand navigation.

Copyright © 1993–2014, Texas Instruments Incorporated

PACKAGING INFORMATION

Orderable Device	Status (1)	Package Type	Package Drawing	Pins	Package Qty	Eco Plan (2)	Lead finish/ Ball material (6)	MSL Peak Temp (3)	Op Temp (°C)	Device Marking (4/5)	Samples
5962-9757301Q2A	ACTIVE	LCCC	FK	20	1	Non-RoHS & Green	SNPB	N / A for Pkg Type	-55 to 125	5962-9757301Q2A SNJ54LVC 373AFK	Samples
5962-9757301QRA	ACTIVE	CDIP	J	20	1	Non-RoHS & Green	SNPB	N / A for Pkg Type	-55 to 125	5962-9757301QR A SNJ54LVC373AJ	Samples
5962-9757301QSA	ACTIVE	CFP	W	20	1	Non-RoHS & Green	SNPB	N / A for Pkg Type	-55 to 125	5962-9757301QS A SNJ54LVC373AW	Samples
SN74LVC373ADBR	ACTIVE	SSOP	DB	20	2000	RoHS & Green	NIPDAU	Level-1-260C-UNLIM	-40 to 85	LC373A	Samples
SN74LVC373ADGVR	ACTIVE	TVSOP	DGV	20	2000	RoHS & Green	NIPDAU	Level-1-260C-UNLIM	-40 to 85	LC373A	Samples
SN74LVC373ADW	ACTIVE	SOIC	DW	20	25	RoHS & Green	NIPDAU	Level-1-260C-UNLIM	-40 to 85	LVC373A	Samples
SN74LVC373ADWG4	ACTIVE	SOIC	DW	20	25	RoHS & Green	NIPDAU	Level-1-260C-UNLIM	-40 to 85	LVC373A	Samples
SN74LVC373ADWR	ACTIVE	SOIC	DW	20	2000	RoHS & Green	NIPDAU	Level-1-260C-UNLIM	-40 to 85	LVC373A	Samples
SN74LVC373AN	ACTIVE	PDIP	N	20	20	RoHS & Green	NIPDAU	N / A for Pkg Type	-40 to 85	SN74LVC373AN	Samples
SN74LVC373ANSR	ACTIVE	SO	NS	20	2000	RoHS & Green	NIPDAU	Level-1-260C-UNLIM	-40 to 85	LVC373A	Samples
SN74LVC373APW	ACTIVE	TSSOP	PW	20	70	RoHS & Green	NIPDAU	Level-1-260C-UNLIM	-40 to 85	LC373A	Samples
SN74LVC373APWE4	ACTIVE	TSSOP	PW	20	70	RoHS & Green	NIPDAU	Level-1-260C-UNLIM	-40 to 85	LC373A	Samples
SN74LVC373APWG4	ACTIVE	TSSOP	PW	20	70	RoHS & Green	NIPDAU	Level-1-260C-UNLIM	-40 to 85	LC373A	Samples
SN74LVC373APWR	ACTIVE	TSSOP	PW	20	2000	RoHS & Green	NIPDAU | SN	Level-1-260C-UNLIM	-40 to 85	LC373A	Samples
SN74LVC373APWRG4	ACTIVE	TSSOP	PW	20	2000	RoHS & Green	NIPDAU	Level-1-260C-UNLIM	-40 to 85	LC373A	Samples
SN74LVC373APWT	ACTIVE	TSSOP	PW	20	250	RoHS & Green	NIPDAU	Level-1-260C-UNLIM	-40 to 85	LC373A	Samples
SN74LVC373APWTE4	ACTIVE	TSSOP	PW	20	250	RoHS & Green	NIPDAU	Level-1-260C-UNLIM	-40 to 85	LC373A	Samples

Orderable Device	Status (1)	Package Type	Package Drawing	Pins	Package Qty	Eco Plan (2)	Lead finish/ Ball material (6)	MSL Peak Temp (3)	Op Temp (°C)	Device Marking (4/5)	Samples
SN74LVC373ARGYR	ACTIVE	VQFN	RGY	20	3000	RoHS & Green	NIPDAU	Level-2-260C-1 YEAR	-40 to 85	LC373A	Samples
SNJ54LVC373AFK	ACTIVE	LCCC	FK	20	1	Non-RoHS & Green	SNPB	N / A for Pkg Type	-55 to 125	5962-9757301Q2A SNJ54LVC 373AFK	Samples
SNJ54LVC373AJ	ACTIVE	CDIP	J	20	1	Non-RoHS & Green	SNPB	N / A for Pkg Type	-55 to 125	5962-9757301QR A SNJ54LVC373AJ	Samples
SNJ54LVC373AW	ACTIVE	CFP	W	20	1	Non-RoHS & Green	SNPB	N / A for Pkg Type	-55 to 125	5962-9757301QS A SNJ54LVC373AW	Samples

(1) The marketing status values are defined as follows:
ACTIVE: Product device recommended for new designs.
LIFEBUY: TI has announced that the device will be discontinued, and a lifetime-buy period is in effect.
NRND: Not recommended for new designs. Device is in production to support existing customers, but TI does not recommend using this part in a new design.
PREVIEW: Device has been announced but is not in production. Samples may or may not be available.
OBSOLETE: TI has discontinued the production of the device.

(2) **RoHS:** TI defines "RoHS" to mean semiconductor products that are compliant with the current EU RoHS requirements for all 10 RoHS substances, including the requirement that RoHS substance do not exceed 0.1% by weight in homogeneous materials. Where designed to be soldered at high temperatures, "RoHS" products are suitable for use in specified lead-free processes. TI may reference these types of products as "Pb-Free".
RoHS Exempt: TI defines "RoHS Exempt" to mean products that contain lead but are compliant with EU RoHS pursuant to a specific EU RoHS exemption.
Green: TI defines "Green" to mean the content of Chlorine (Cl) and Bromine (Br) based flame retardants meet JS709B low halogen requirements of <=1000ppm threshold. Antimony trioxide based flame retardants must also meet the <=1000ppm threshold requirement.

(3) MSL, Peak Temp. - The Moisture Sensitivity Level rating according to the JEDEC industry standard classifications, and peak solder temperature.

(4) There may be additional marking, which relates to the logo, the lot trace code information, or the environmental category on the device.

(5) Multiple Device Markings will be inside parentheses. Only one Device Marking contained in parentheses and separated by a "~" will appear on a device. If a line is indented then it is a continuation of the previous line and the two combined represent the entire Device Marking for that device.

(6) Lead finish/Ball material - Orderable Devices may have multiple material finish options. Finish options are separated by a vertical ruled line. Lead finish/Ball material values may wrap to two lines if the finish value exceeds the maximum column width.

Important Information and Disclaimer: The information provided on this page represents TI's knowledge and belief as of the date that it is provided. TI bases its knowledge and belief on information provided by third parties, and makes no representation or warranty as to the accuracy of such information. Efforts are underway to better integrate information from third parties. TI has taken and continues to take reasonable steps to provide representative and accurate information but may not have conducted destructive testing or chemical analysis on incoming materials and chemicals. TI and TI suppliers consider certain information to be proprietary, and thus CAS numbers and other limited information may not be available for release.

In no event shall TI's liability arising out of such information exceed the total purchase price of the TI part(s) at issue in this document sold by TI to Customer on an annual basis.

OTHER QUALIFIED VERSIONS OF SN54LVC373A, SN74LVC373A :

- Catalog: SN74LVC373A
- Enhanced Product: SN74LVC373A-EP, SN74LVC373A-EP
- Military: SN54LVC373A

NOTE: Qualified Version Definitions:

- Catalog - TI's standard catalog product
- Enhanced Product - Supports Defense, Aerospace and Medical Applications
- Military - QML certified for Military and Defense Applications

TAPE AND REEL INFORMATION

REEL DIMENSIONS

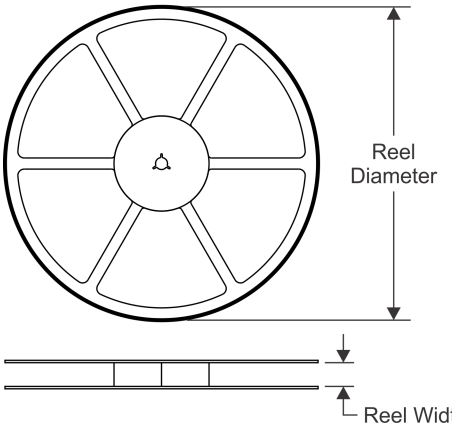

TAPE DIMENSIONS

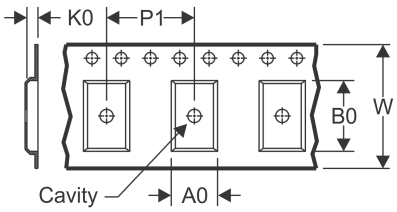

A0	Dimension designed to accommodate the component width
B0	Dimension designed to accommodate the component length
K0	Dimension designed to accommodate the component thickness
W	Overall width of the carrier tape
P1	Pitch between successive cavity centers

QUADRANT ASSIGNMENTS FOR PIN 1 ORIENTATION IN TAPE

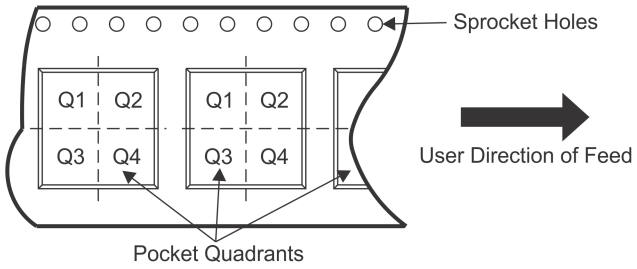

*All dimensions are nominal

Device	Package Type	Package Drawing	Pins	SPQ	Reel Diameter (mm)	Reel Width W1 (mm)	A0 (mm)	B0 (mm)	K0 (mm)	P1 (mm)	W (mm)	Pin1 Quadrant
SN74LVC373ADBR	SSOP	DB	20	2000	330.0	16.4	8.2	7.5	2.5	12.0	16.0	Q1
SN74LVC373ADGVR	TVSOP	DGV	20	2000	330.0	12.4	6.9	5.6	1.6	8.0	12.0	Q1
SN74LVC373ADWR	SOIC	DW	20	2000	330.0	24.4	10.8	13.3	2.7	12.0	24.0	Q1
SN74LVC373ANSR	SO	NS	20	2000	330.0	24.4	8.4	13.0	2.5	12.0	24.0	Q1
SN74LVC373APWR	TSSOP	PW	20	2000	330.0	16.4	6.95	7.0	1.4	8.0	16.0	Q1
SN74LVC373APWR	TSSOP	PW	20	2000	330.0	16.4	6.95	7.1	1.6	8.0	16.0	Q1
SN74LVC373APWRG4	TSSOP	PW	20	2000	330.0	16.4	6.95	7.0	1.4	8.0	16.0	Q1
SN74LVC373APWT	TSSOP	PW	20	250	330.0	16.4	6.95	7.1	1.6	8.0	16.0	Q1
SN74LVC373ARGYR	VQFN	RGY	20	3000	330.0	12.4	3.8	4.8	1.6	8.0	12.0	Q1

TAPE AND REEL BOX DIMENSIONS

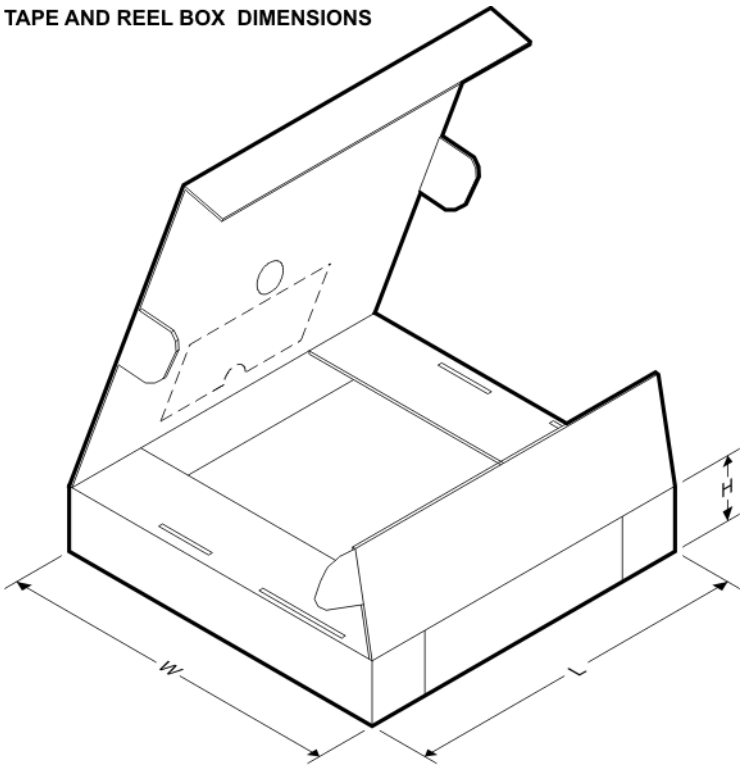

*All dimensions are nominal

Device	Package Type	Package Drawing	Pins	SPQ	Length (mm)	Width (mm)	Height (mm)
SN74LVC373ADBR	SSOP	DB	20	2000	853.0	449.0	35.0
SN74LVC373ADGVR	TVSOP	DGV	20	2000	853.0	449.0	35.0
SN74LVC373ADWR	SOIC	DW	20	2000	367.0	367.0	45.0
SN74LVC373ANSR	SO	NS	20	2000	367.0	367.0	45.0
SN74LVC373APWR	TSSOP	PW	20	2000	853.0	449.0	35.0
SN74LVC373APWR	TSSOP	PW	20	2000	364.0	364.0	27.0
SN74LVC373APWRG4	TSSOP	PW	20	2000	853.0	449.0	35.0
SN74LVC373APWT	TSSOP	PW	20	250	853.0	449.0	35.0
SN74LVC373ARGYR	VQFN	RGY	20	3000	853.0	449.0	35.0

TUBE

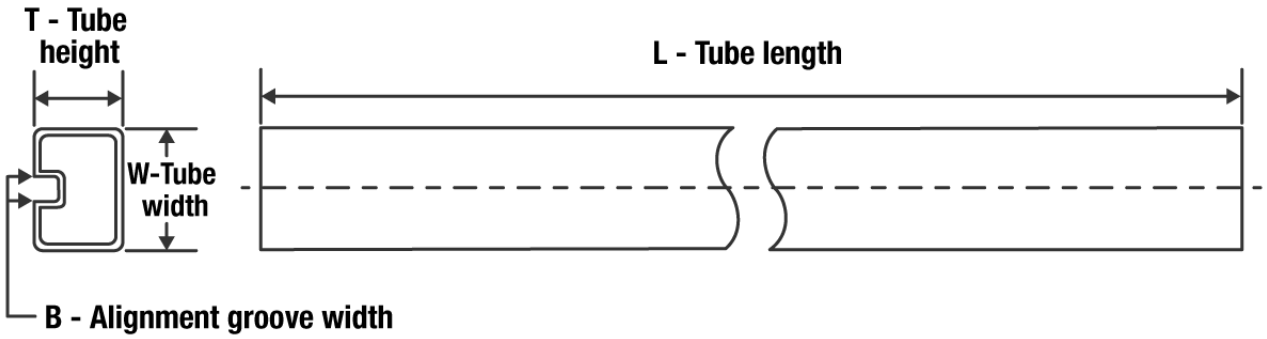

*All dimensions are nominal

Device	Package Name	Package Type	Pins	SPQ	L (mm)	W (mm)	T (µm)	B (mm)
5962-9757301Q2A	FK	LCCC	20	1	506.98	12.06	2030	NA
SN74LVC373ADW	DW	SOIC	20	25	507	12.83	5080	6.6
SN74LVC373ADWG4	DW	SOIC	20	25	507	12.83	5080	6.6
SN74LVC373AN	N	PDIP	20	20	506	13.97	11230	4.32
SN74LVC373APW	PW	TSSOP	20	70	530	10.2	3600	3.5
SN74LVC373APWE4	PW	TSSOP	20	70	530	10.2	3600	3.5
SN74LVC373APWG4	PW	TSSOP	20	70	530	10.2	3600	3.5
SNJ54LVC373AFK	FK	LCCC	20	1	506.98	12.06	2030	NA

W (R–GDFP–F20) CERAMIC DUAL FLATPACK

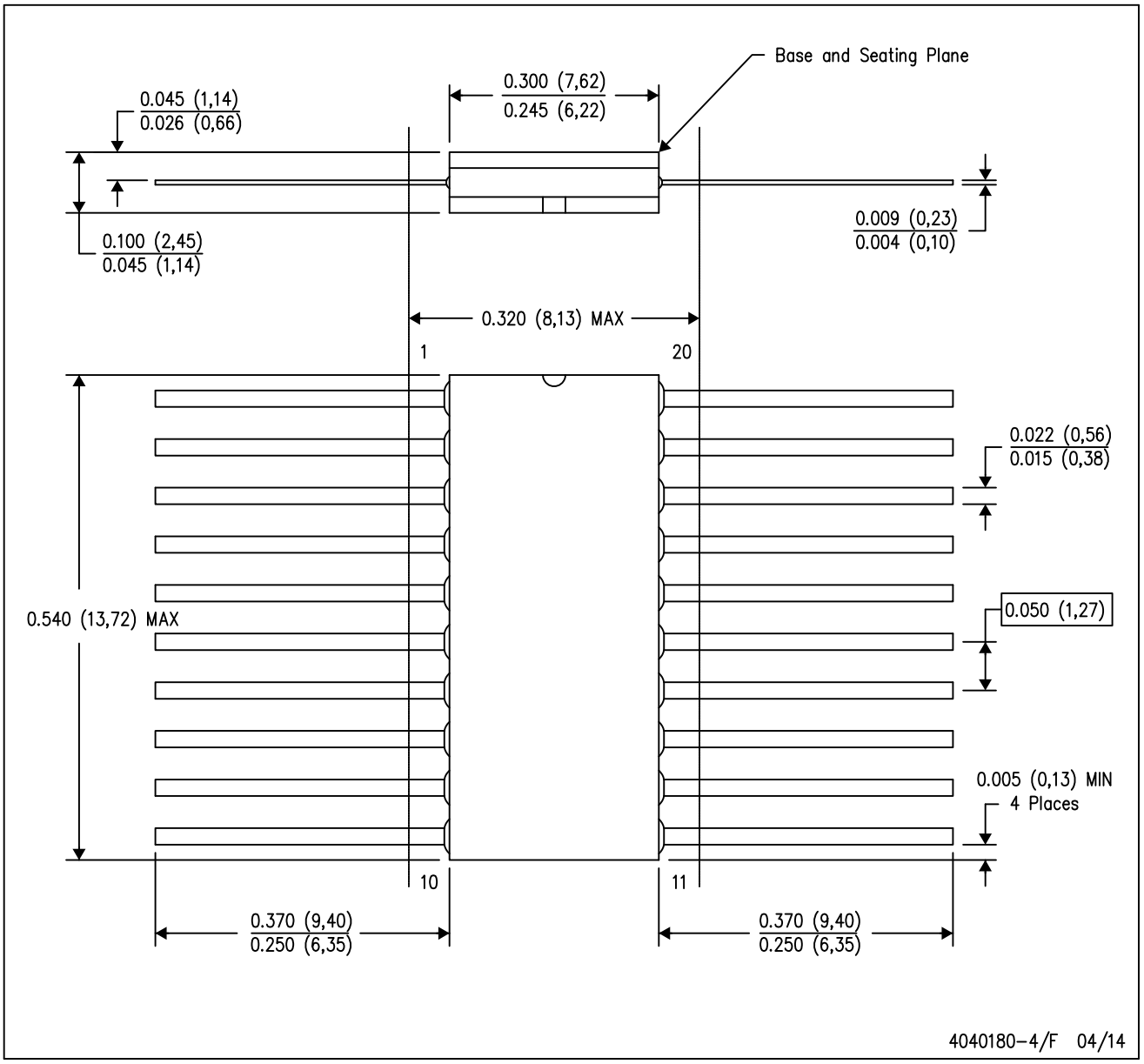

NOTES:
A. All linear dimensions are in inches (millimeters).
B. This drawing is subject to change without notice.
C. This package can be hermetically sealed with a ceramic lid using glass frit.
D. Index point is provided on cap for terminal identification only.
E. Falls within Mil–Std 1835 GDFP2–F20

PACKAGE OUTLINE

PW0020A

TSSOP - 1.2 mm max height

SMALL OUTLINE PACKAGE

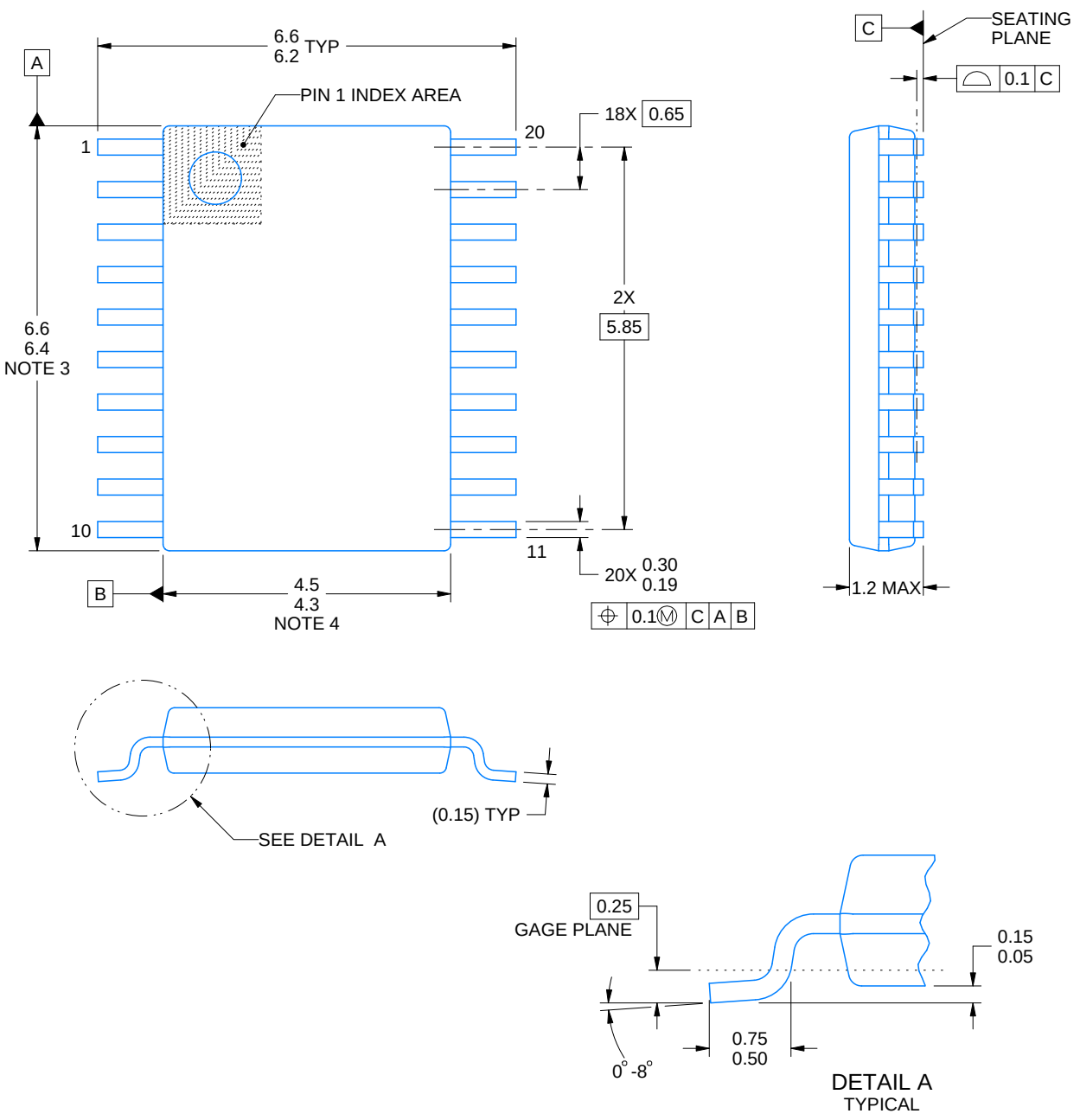

NOTES:

1. All linear dimensions are in millimeters. Any dimensions in parenthesis are for reference only. Dimensioning and tolerancing per ASME Y14.5M.
2. This drawing is subject to change without notice.
3. This dimension does not include mold flash, protrusions, or gate burrs. Mold flash, protrusions, or gate burrs shall not exceed 0.15 mm per side.
4. This dimension does not include interlead flash. Interlead flash shall not exceed 0.25 mm per side.
5. Reference JEDEC registration MO-153.

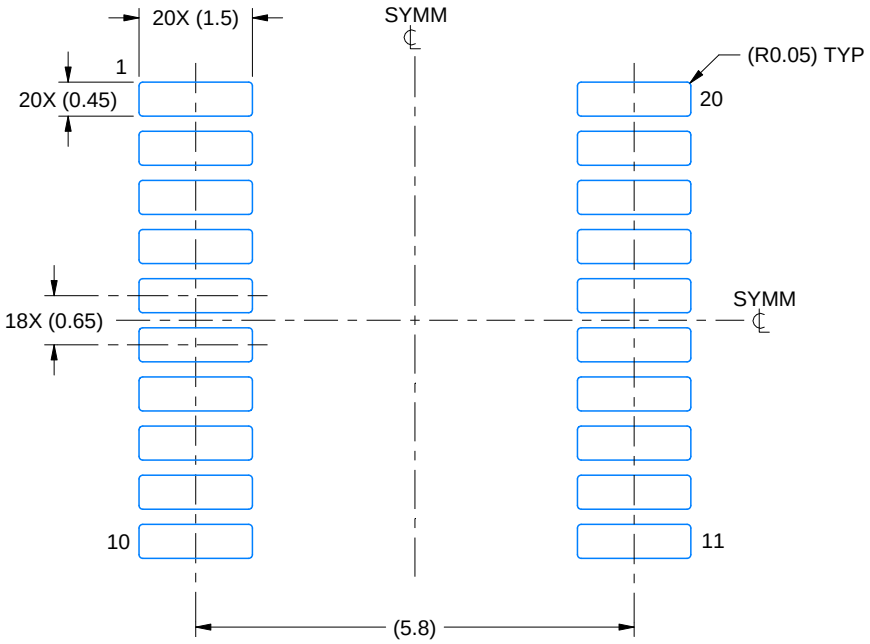

LAND PATTERN EXAMPLE
EXPOSED METAL SHOWN
SCALE: 10X



SOLDER MASK DETAILS

4220206/A 02/2017

NOTES: (continued)

6. Publication IPC-7351 may have alternate designs.
7. Solder mask tolerances between and around signal pads can vary based on board fabrication site.

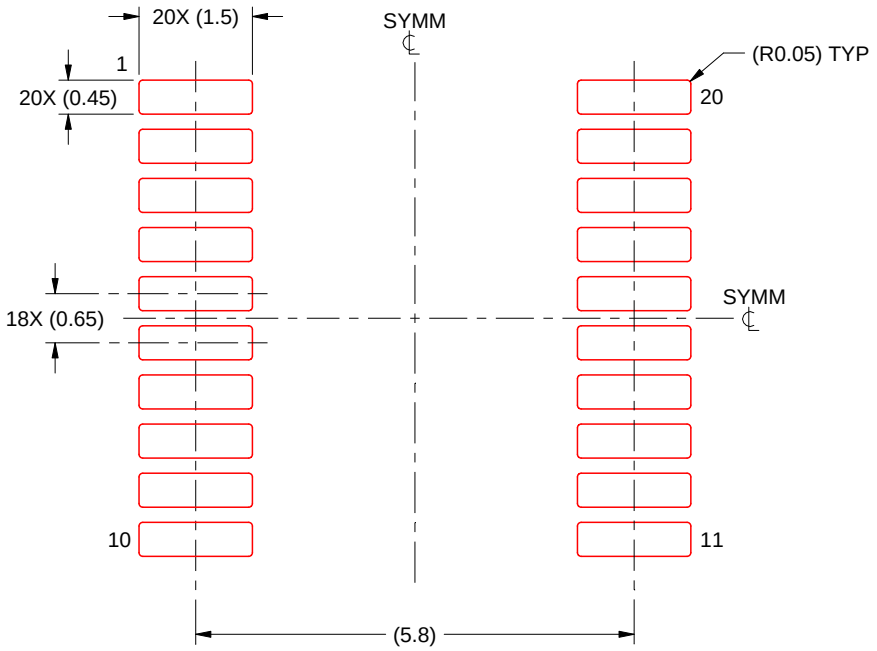

SOLDER PASTE EXAMPLE
BASED ON 0.125 mm THICK STENCIL
SCALE: 10X

4220206/A 02/2017

NOTES: (continued)

8. Laser cutting apertures with trapezoidal walls and rounded corners may offer better paste release. IPC-7525 may have alternate design recommendations.
9. Board assembly site may have different recommendations for stencil design.

PW (R–PDSO–G20) PLASTIC SMALL OUTLINE

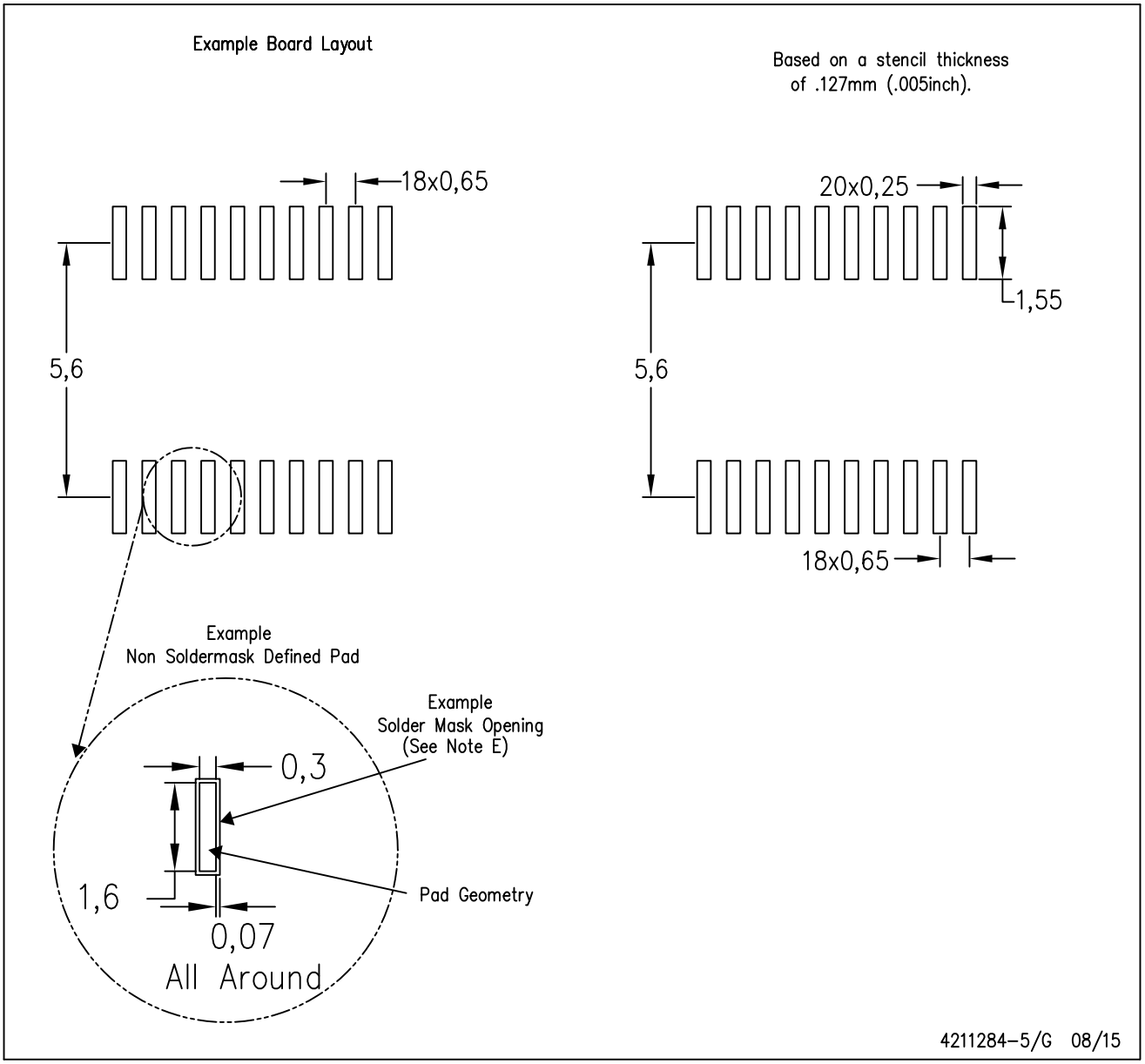

NOTES:
A. All linear dimensions are in millimeters.
B. This drawing is subject to change without notice.
C. Publication IPC–7351 is recommended for alternate design.
D. Laser cutting apertures with trapezoidal walls and also rounding corners will offer better paste release. Customers should contact their board assembly site for stencil design recommendations. Refer to IPC–7525 for other stencil recommendations.
E. Customers should contact their board fabrication site for solder mask tolerances between and around signal pads.

FK (S–CQCC–N**) LEADLESS CERAMIC CHIP CARRIER

28 TERMINAL SHOWN

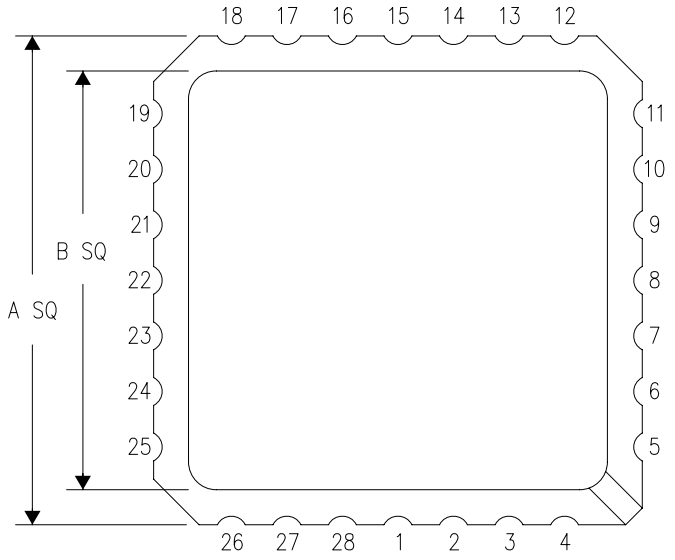

NO. OF TERMINALS **	A		B	
	MIN	MAX	MIN	MAX
20	0.342 (8,69)	0.358 (9,09)	0.307 (7,80)	0.358 (9,09)
28	0.442 (11,23)	0.458 (11,63)	0.406 (10,31)	0.458 (11,63)
44	0.640 (16,26)	0.660 (16,76)	0.495 (12,58)	0.560 (14,22)
52	0.740 (18,78)	0.761 (19,32)	0.495 (12,58)	0.560 (14,22)
68	0.938 (23,83)	0.962 (24,43)	0.850 (21,6)	0.858 (21,8)
84	1.141 (28,99)	1.165 (29,59)	1.047 (26,6)	1.063 (27,0)

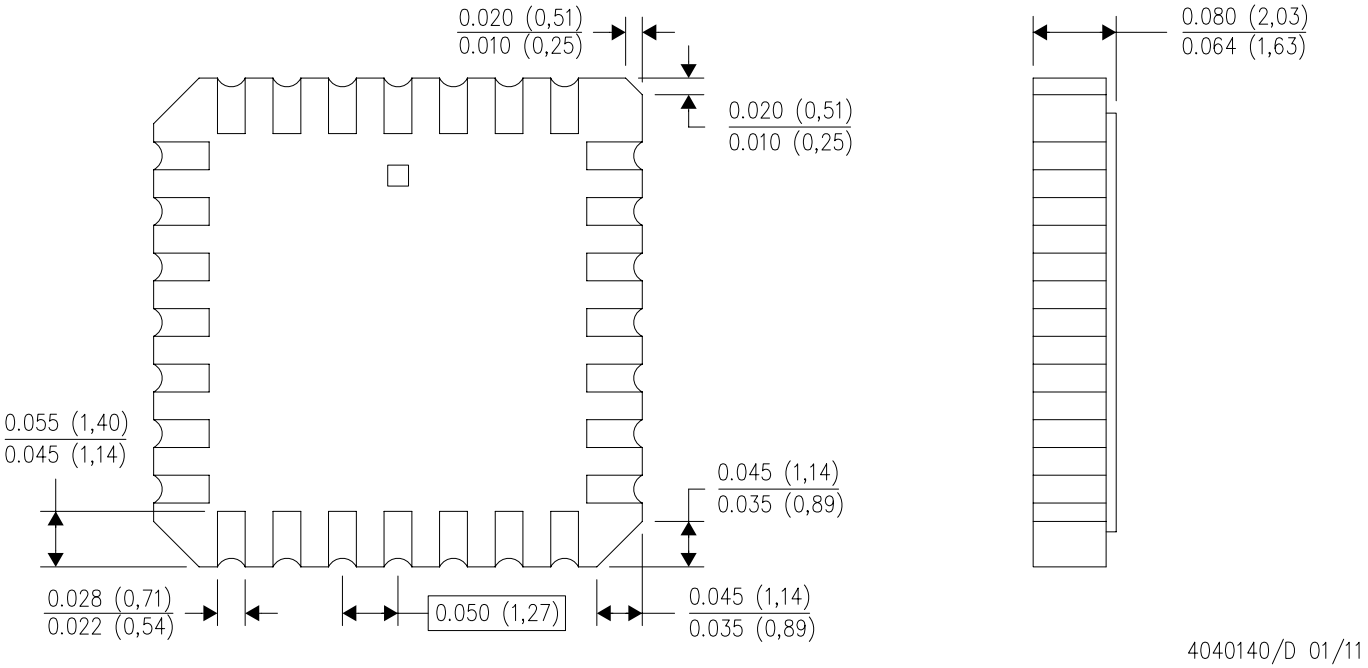

4040140/D 01/11

NOTES:
A. All linear dimensions are in inches (millimeters).
B. This drawing is subject to change without notice.
C. This package can be hermetically sealed with a metal lid.
D. Falls within JEDEC MS–004

PACKAGE OUTLINE

DB0020A

SSOP - 2 mm max height

SMALL OUTLINE PACKAGE

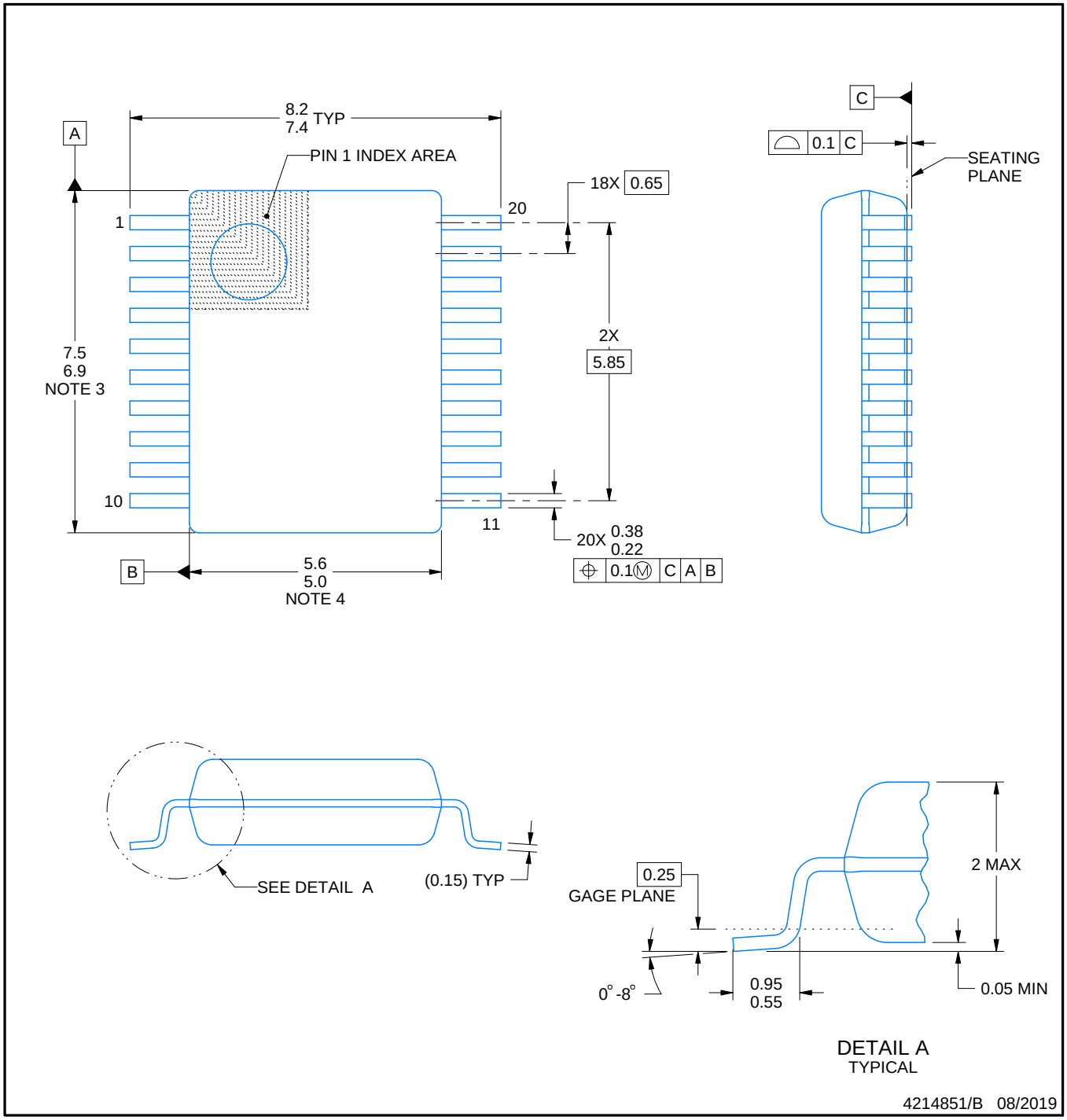

NOTES:

1. All linear dimensions are in millimeters. Any dimensions in parenthesis are for reference only. Dimensioning and tolerancing per ASME Y14.5M.
2. This drawing is subject to change without notice.
3. This dimension does not include mold flash, protrusions, or gate burrs. Mold flash, protrusions, or gate burrs shall not exceed 0.15 mm per side.
4. This dimension does not include interlead flash. Interlead flash shall not exceed 0.25 mm per side.
5. Reference JEDEC registration MO-150.

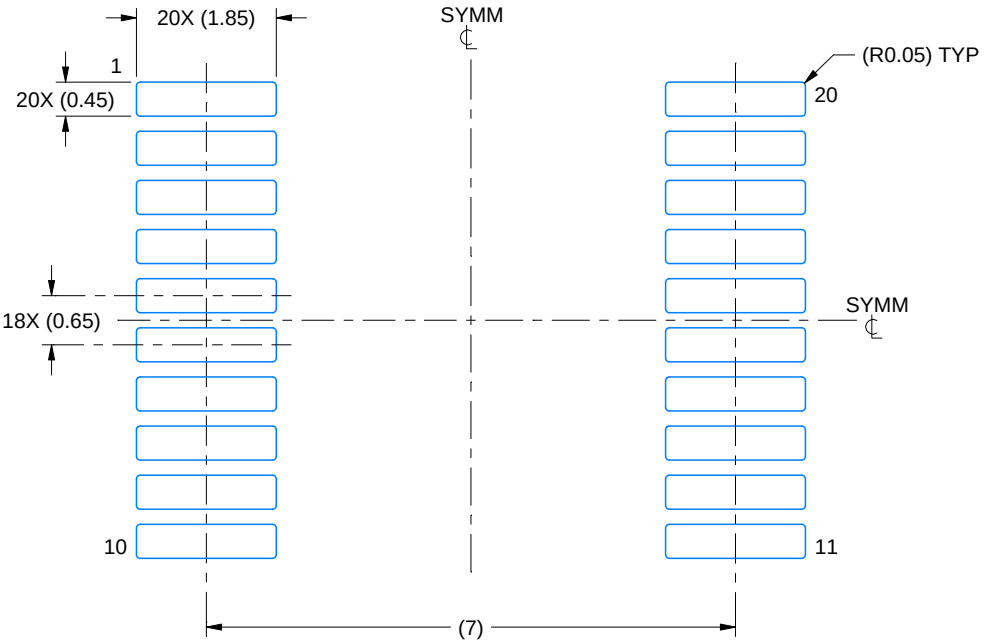

LAND PATTERN EXAMPLE
EXPOSED METAL SHOWN
SCALE: 10X

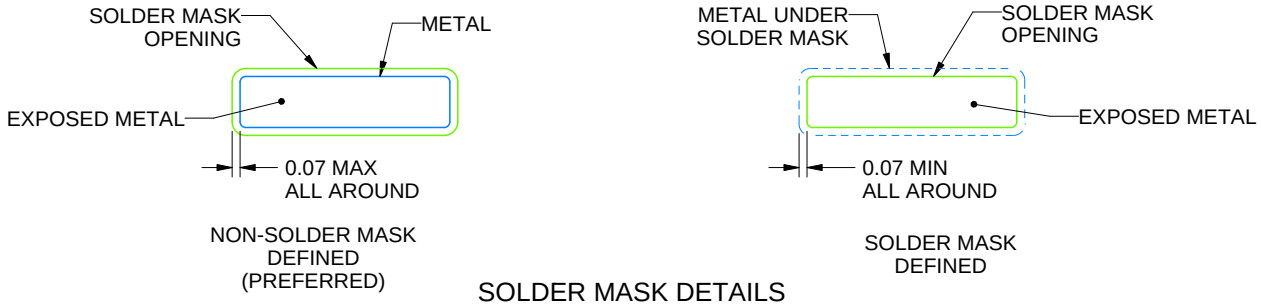

SOLDER MASK DETAILS

4214851/B 08/2019

NOTES: (continued)

6. Publication IPC-7351 may have alternate designs.
7. Solder mask tolerances between and around signal pads can vary based on board fabrication site.

EXAMPLE STENCIL DESIGN

DB0020A

SSOP - 2 mm max height

SMALL OUTLINE PACKAGE

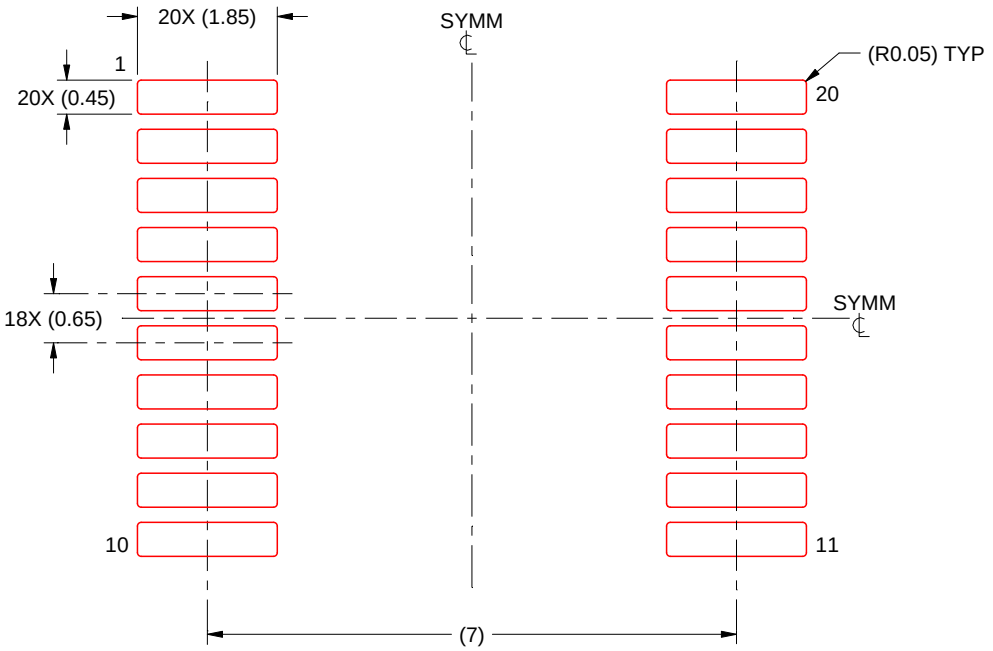

SOLDER PASTE EXAMPLE
BASED ON 0.125 mm THICK STENCIL
SCALE: 10X

4214851/B 08/2019

NOTES: (continued)

8. Laser cutting apertures with trapezoidal walls and rounded corners may offer better paste release. IPC-7525 may have alternate design recommendations.
9. Board assembly site may have different recommendations for stencil design.

MECHANICAL DATA

NS (R-PDSO-G)** **PLASTIC SMALL-OUTLINE PACKAGE**

14-PINS SHOWN

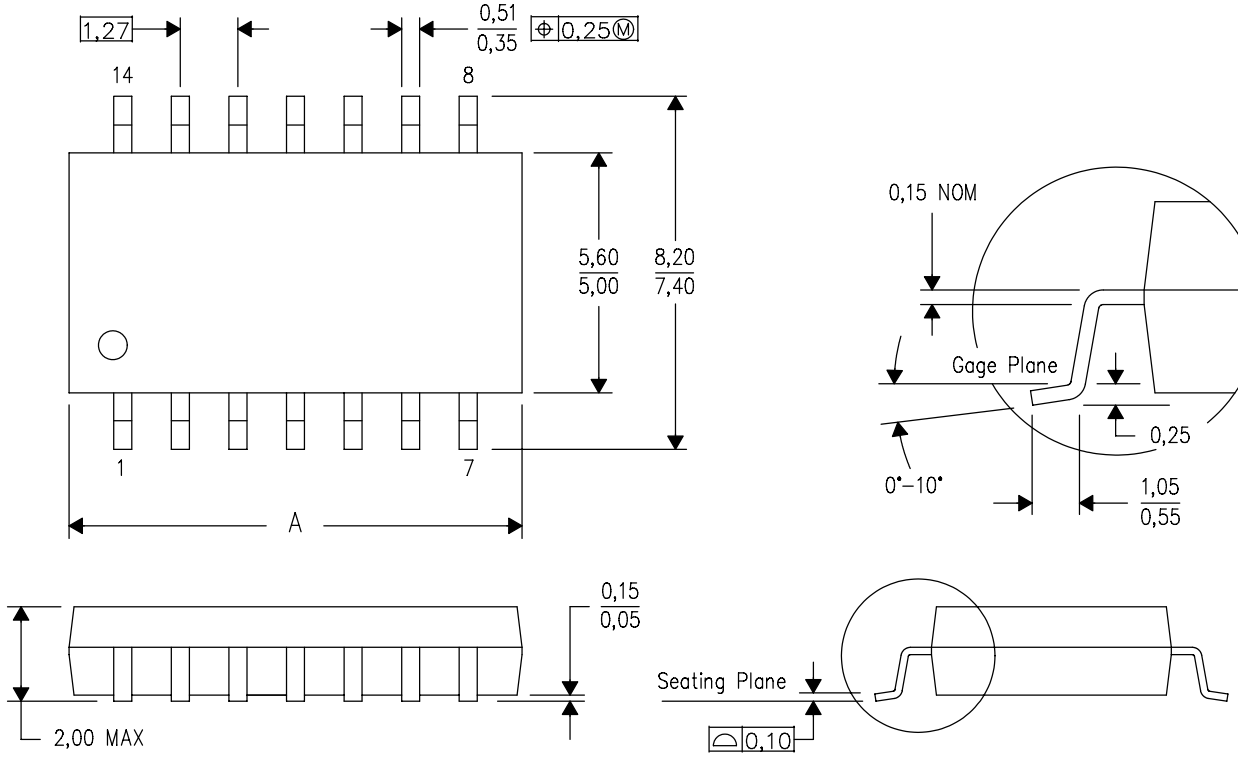

DIM \ PINS **	14	16	20	24
A MAX	10,50	10,50	12,90	15,30
A MIN	9,90	9,90	12,30	14,70

4040062/C 03/03

NOTES:
A. All linear dimensions are in millimeters.
B. This drawing is subject to change without notice.
C. Body dimensions do not include mold flash or protrusion, not to exceed 0,15.

J (R–GDIP–T**)

14 LEADS SHOWN

CERAMIC DUAL IN–LINE PACKAGE

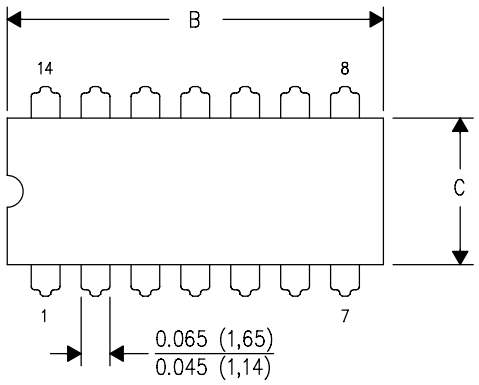

DIM \ PINS **	14	16	18	20
A	0.300 (7,62) BSC	0.300 (7,62) BSC	0.300 (7,62) BSC	0.300 (7,62) BSC
B MAX	0.785 (19,94)	.840 (21,34)	0.960 (24,38)	1.060 (26,92)
B MIN	—	—	—	—
C MAX	0.300 (7,62)	0.300 (7,62)	0.310 (7,87)	0.300 (7,62)
C MIN	0.245 (6,22)	0.245 (6,22)	0.220 (5,59)	0.245 (6,22)

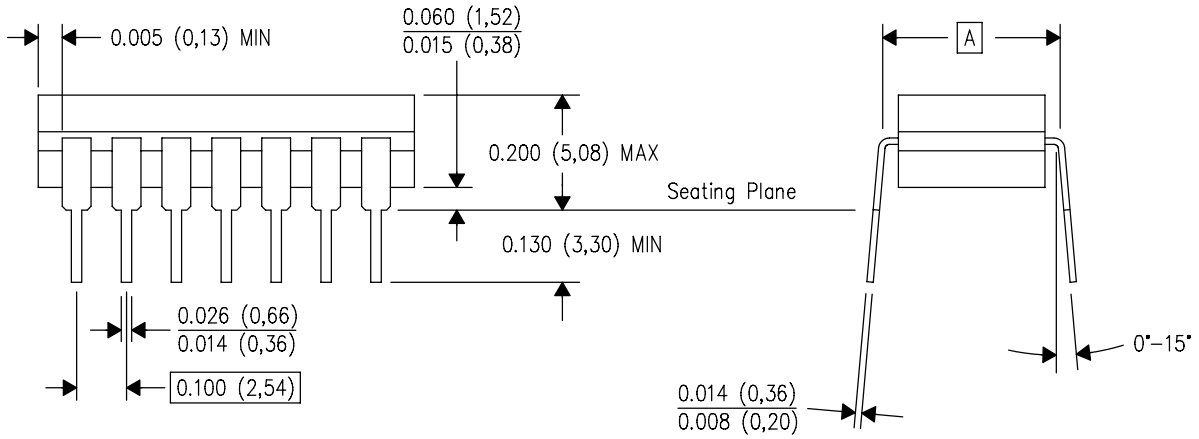

4040083/F 03/03

NOTES:
A. All linear dimensions are in inches (millimeters).
B. This drawing is subject to change without notice.
C. This package is hermetically sealed with a ceramic lid using glass frit.
D. Index point is provided on cap for terminal identification only on press ceramic glass frit seal only.
E. Falls within MIL STD 1835 GDIP1–T14, GDIP1–T16, GDIP1–T18 and GDIP1–T20.

DGV (R-PDSO-G)** **PLASTIC SMALL-OUTLINE**

24 PINS SHOWN

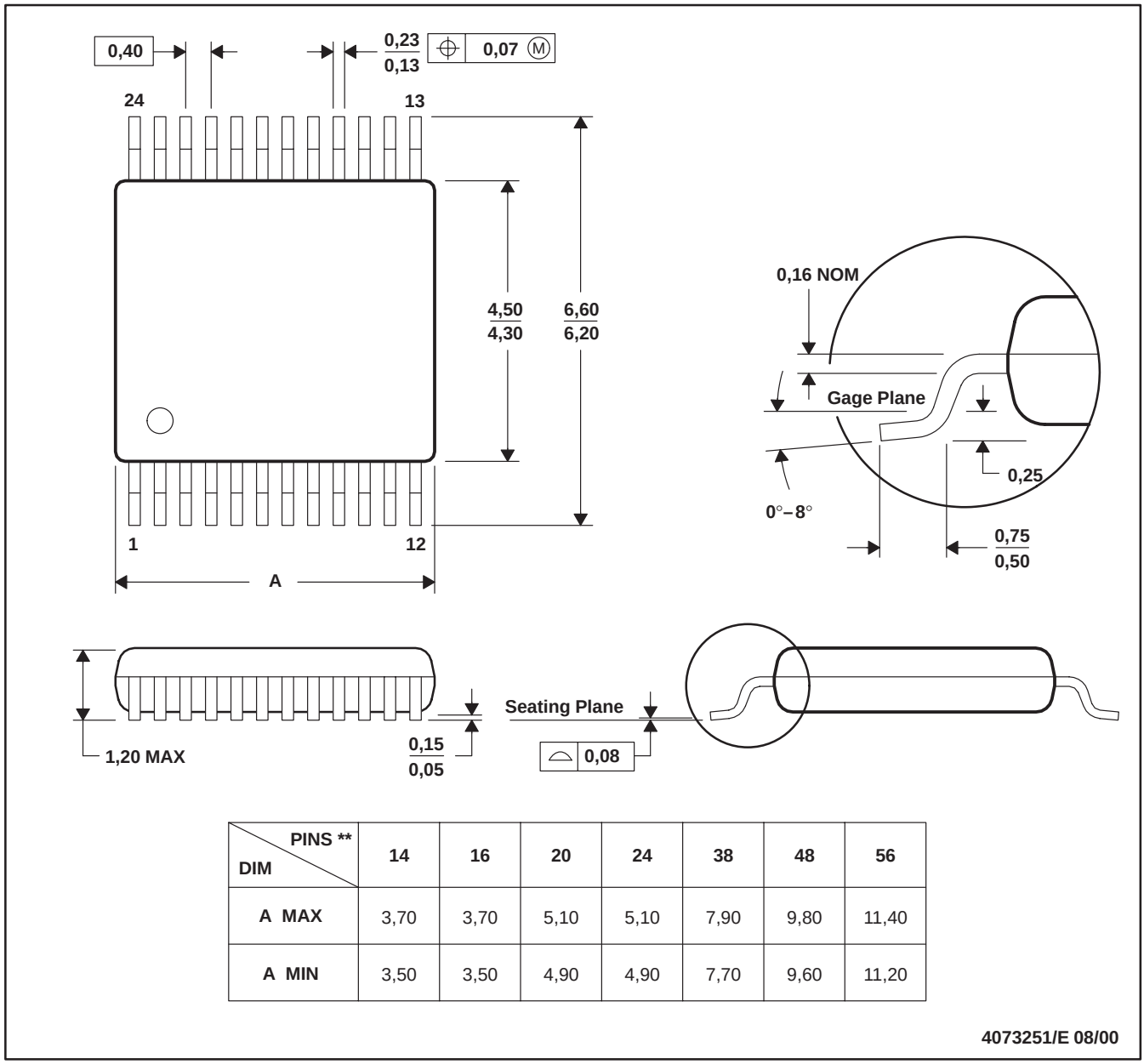

DIM \ PINS **	14	16	20	24	38	48	56
A MAX	3,70	3,70	5,10	5,10	7,90	9,80	11,40
A MIN	3,50	3,50	4,90	4,90	7,70	9,60	11,20

4073251/E 08/00

NOTES: A. All linear dimensions are in millimeters.
B. This drawing is subject to change without notice.
C. Body dimensions do not include mold flash or protrusion, not to exceed 0,15 per side.
D. Falls within JEDEC: 24/48 Pins – MO-153
14/16/20/56 Pins – MO-194

GENERIC PACKAGE VIEW

RGY 20

VQFN - 1 mm max height

3.5 x 4.5, 0.5 mm pitch

PLASTIC QUAD FGLATPACK - NO LEAD

This image is a representation of the package family, actual package may vary.
Refer to the product data sheet for package details.

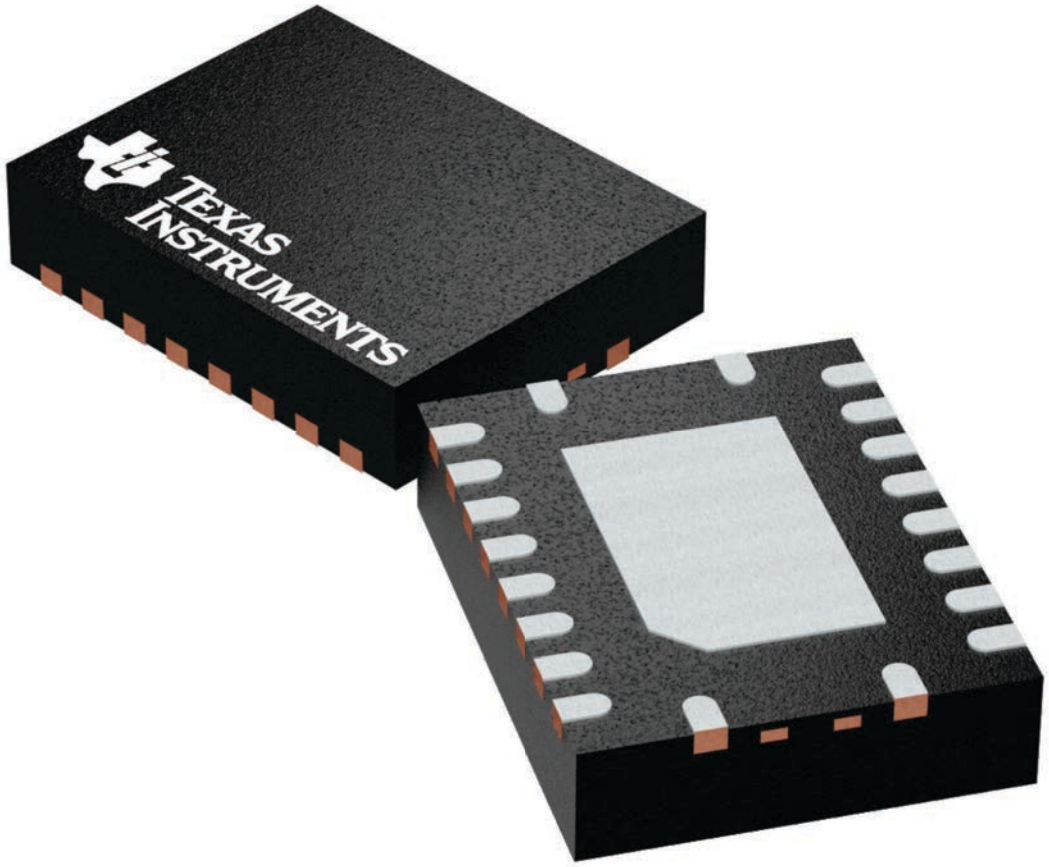

4225264/A

PACKAGE OUTLINE

RGY0020A

VQFN - 1 mm max height

PLASTIC QUAD FLATPACK - NO LEAD

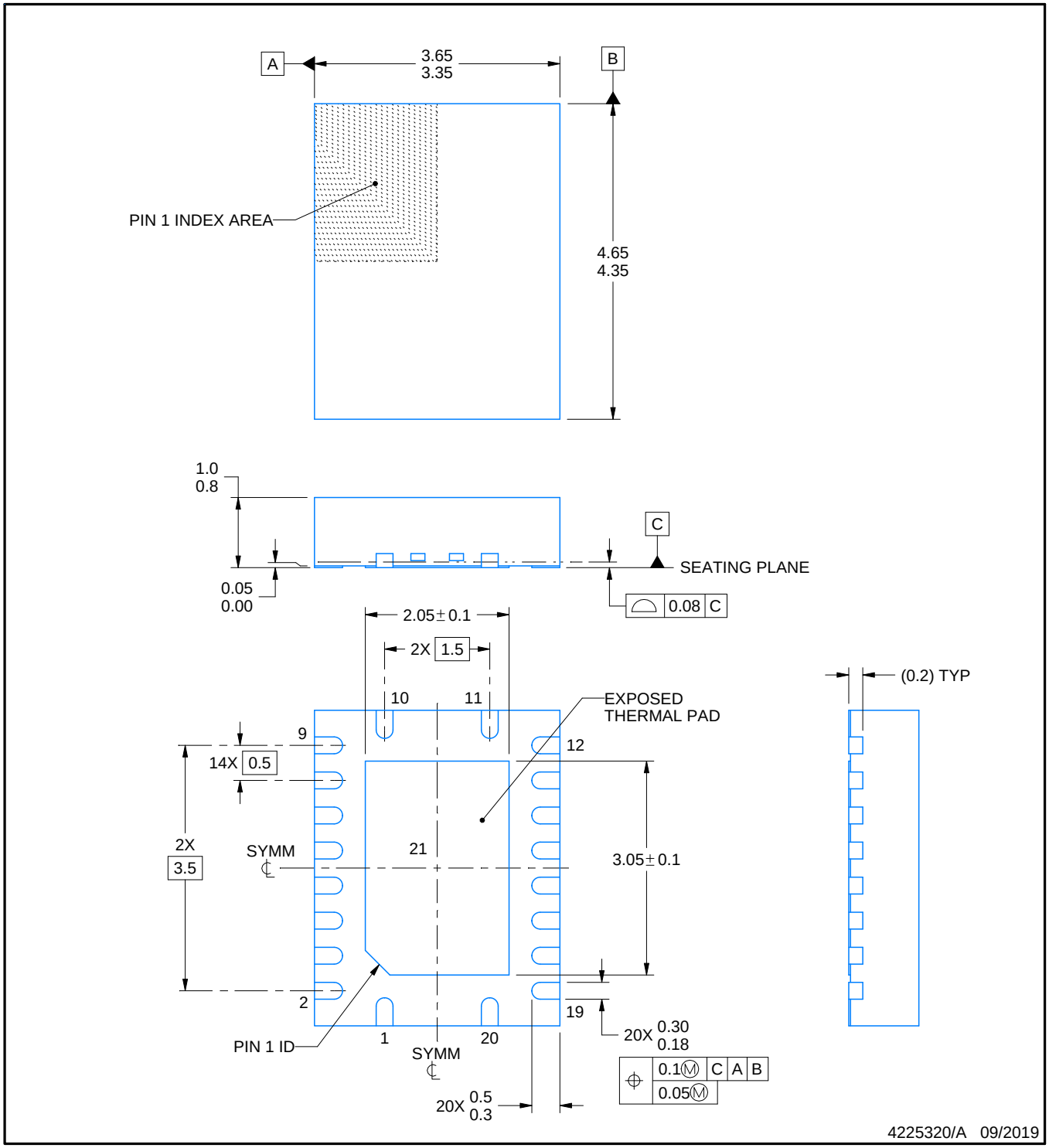

NOTES:

1. All linear dimensions are in millimeters. Any dimensions in parenthesis are for reference only. Dimensioning and tolerancing per ASME Y14.5M.
2. This drawing is subject to change without notice.
3. The package thermal pad must be soldered to the printed circuit board for thermal and mechanical performance.

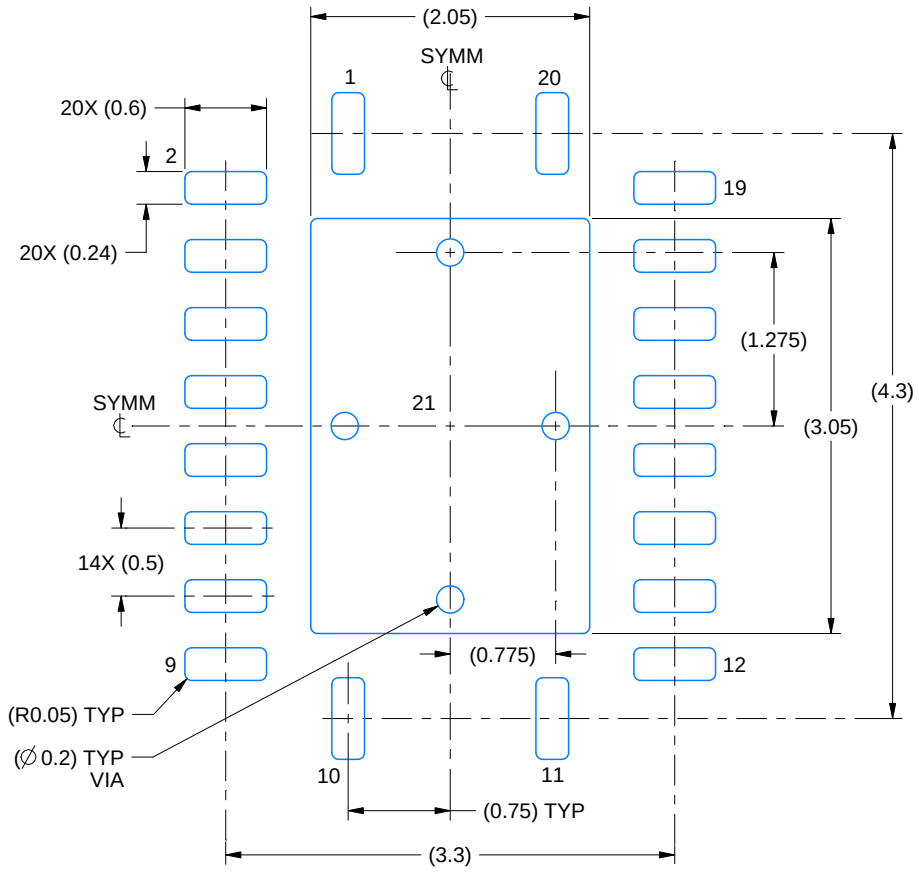

LAND PATTERN EXAMPLE
EXPOSED METAL SHOWN
SCALE:18X

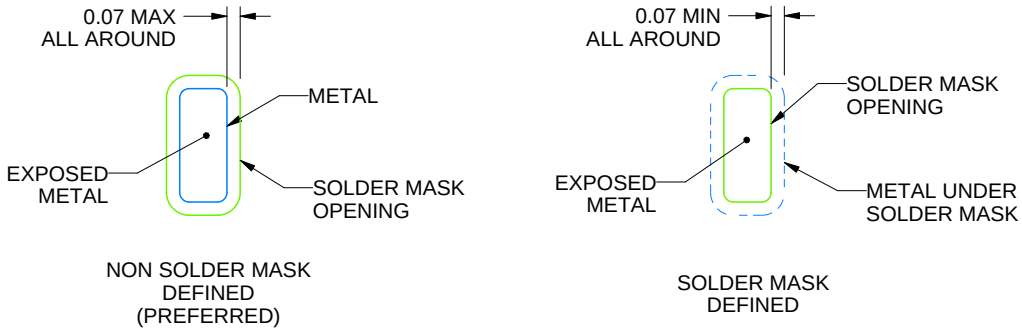

SOLDER MASK DETAILS

4225320/A 09/2019

NOTES: (continued)

4. This package is designed to be soldered to a thermal pad on the board. For more information, see Texas Instruments literature number SLUA271 (www.ti.com/lit/slua271).
5. Vias are optional depending on application, refer to device data sheet. If any vias are implemented, refer to their locations shown on this view. It is recommended that vias under paste be filled, plugged or tented.

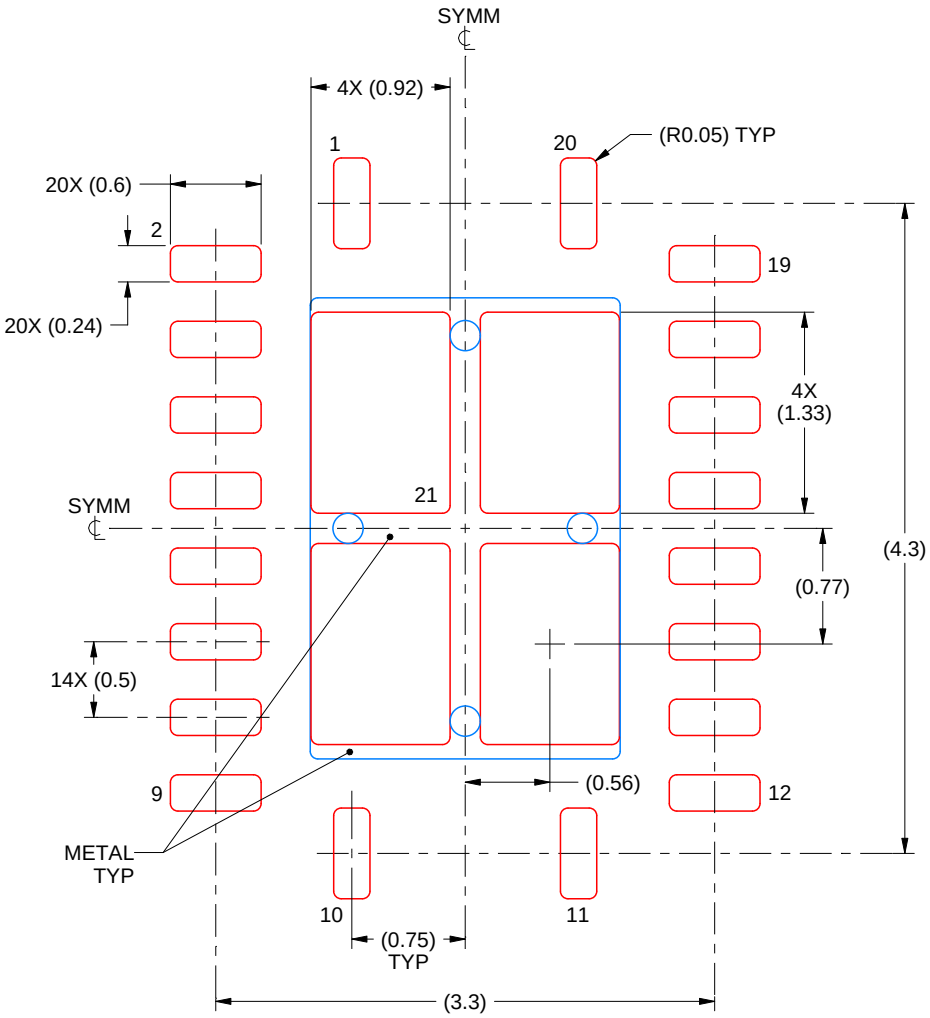

SOLDER PASTE EXAMPLE
BASED ON 0.125 mm THICK STENCIL

EXPOSED PAD 21
78% PRINTED SOLDER COVERAGE BY AREA UNDER PACKAGE
SCALE:20X

4225320/A 09/2019

NOTES: (continued)

6. Laser cutting apertures with trapezoidal walls and rounded corners may offer better paste release. IPC-7525 may have alternate design recommendations.

N (R–PDIP–T**)

PLASTIC DUAL–IN–LINE PACKAGE

16 PINS SHOWN

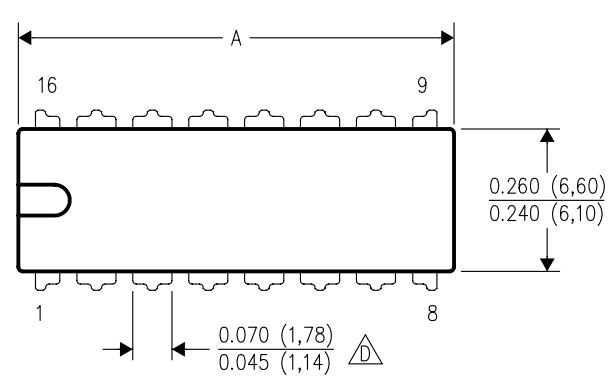

DIM \ PINS **	14	16	18	20
A MAX	0.775 (19,69)	0.775 (19,69)	0.920 (23,37)	1.060 (26,92)
A MIN	0.745 (18,92)	0.745 (18,92)	0.850 (21,59)	0.940 (23,88)
MS–001 VARIATION (C)	AA	BB	AC	AD

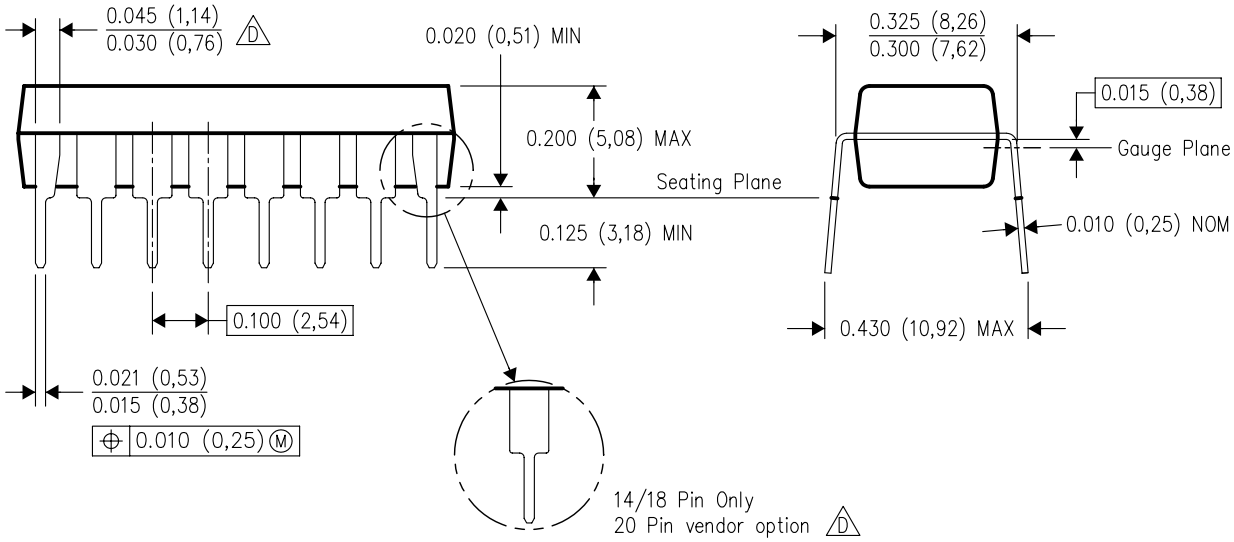

4040049/E 12/2002

NOTES:
A. All linear dimensions are in inches (millimeters).
B. This drawing is subject to change without notice.
C. Falls within JEDEC MS–001, except 18 and 20 pin minimum body length (Dim A).
D. The 20 pin end lead shoulder width is a vendor option, either half or full width.

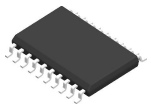

PACKAGE OUTLINE

DW0020A

SOIC - 2.65 mm max height

SOIC

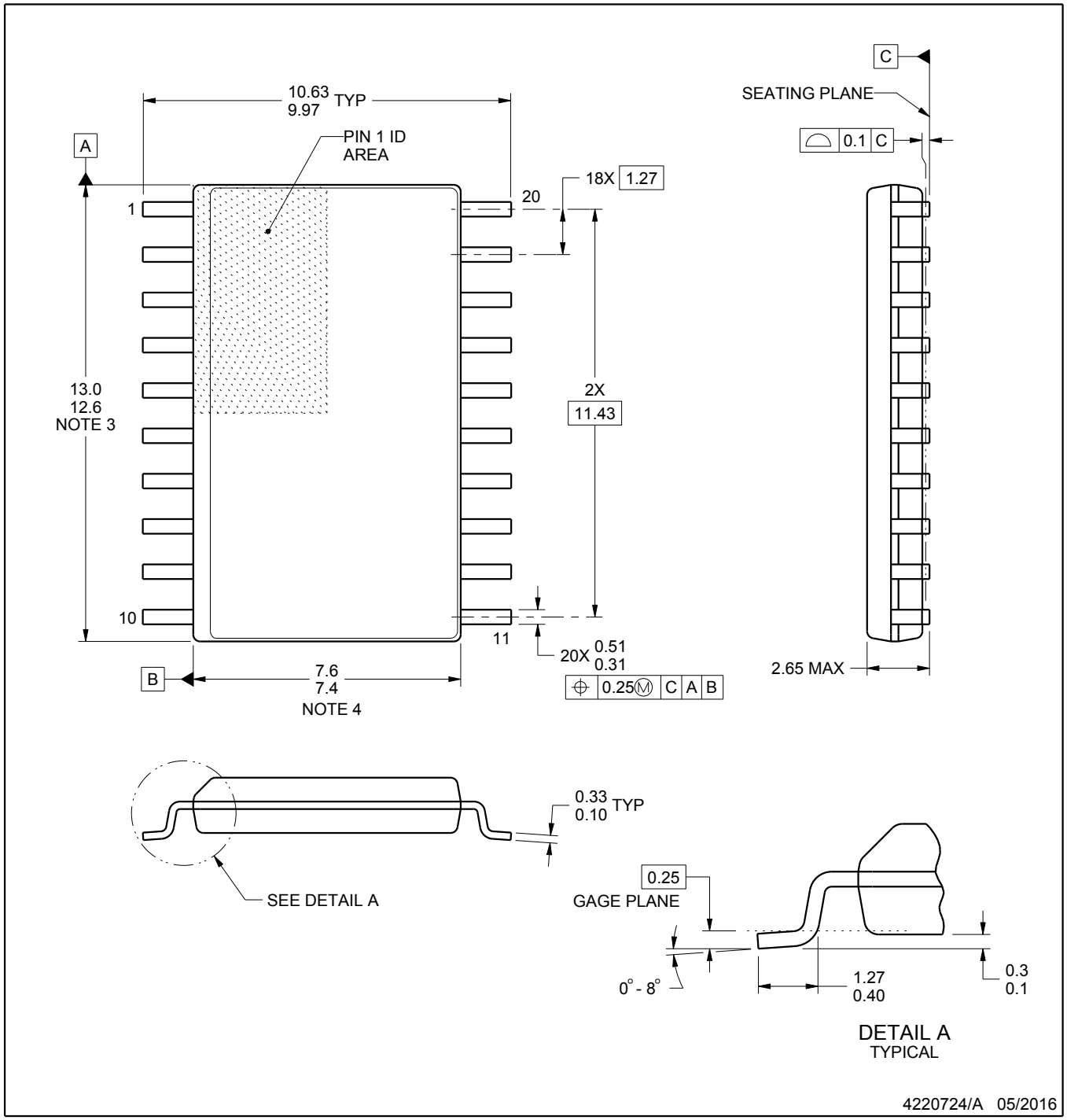

NOTES:

1. All linear dimensions are in millimeters. Dimensions in parenthesis are for reference only. Dimensioning and tolerancing per ASME Y14.5M.
2. This drawing is subject to change without notice.
3. This dimension does not include mold flash, protrusions, or gate burrs. Mold flash, protrusions, or gate burrs shall not exceed 0.15 mm per side.
4. This dimension does not include interlead flash. Interlead flash shall not exceed 0.43 mm per side.
5. Reference JEDEC registration MS-013.

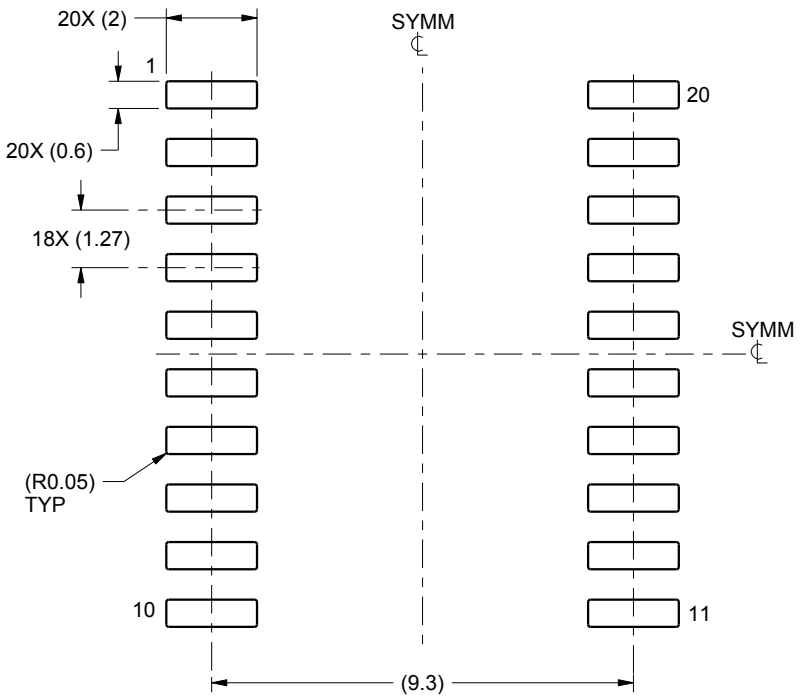

LAND PATTERN EXAMPLE
SCALE:6X

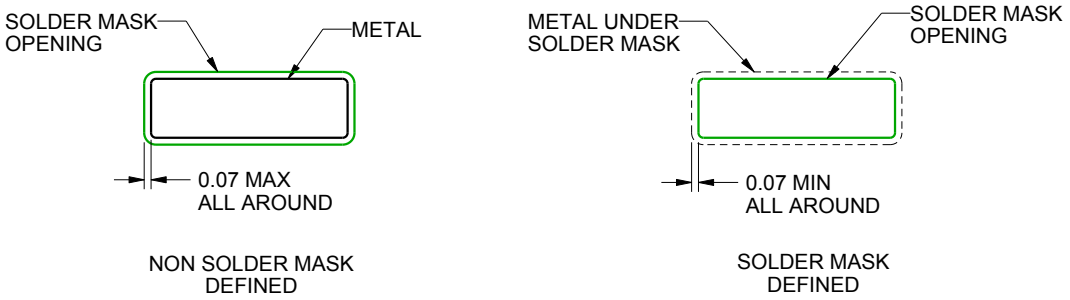

SOLDER MASK DETAILS

4220724/A 05/2016

NOTES: (continued)

6. Publication IPC-7351 may have alternate designs.
7. Solder mask tolerances between and around signal pads can vary based on board fabrication site.

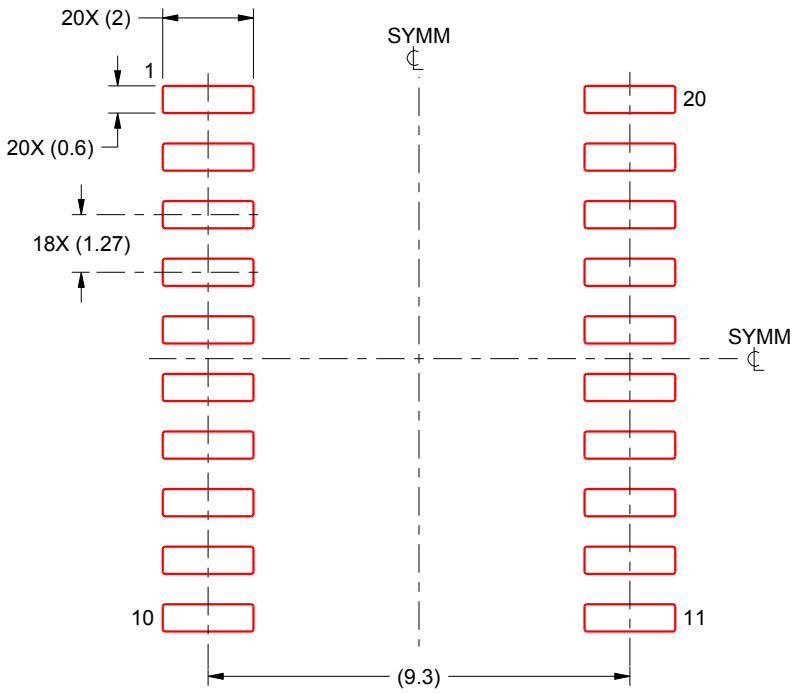

SOLDER PASTE EXAMPLE
BASED ON 0.125 mm THICK STENCIL
SCALE:6X

4220724/A 05/2016

NOTES: (continued)

8. Laser cutting apertures with trapezoidal walls and rounded corners may offer better paste release. IPC-7525 may have alternate design recommendations.
9. Board assembly site may have different recommendations for stencil design.

IMPORTANT NOTICE AND DISCLAIMER

TI PROVIDES TECHNICAL AND RELIABILITY DATA (INCLUDING DATA SHEETS), DESIGN RESOURCES (INCLUDING REFERENCE DESIGNS), APPLICATION OR OTHER DESIGN ADVICE, WEB TOOLS, SAFETY INFORMATION, AND OTHER RESOURCES “AS IS” AND WITH ALL FAULTS, AND DISCLAIMS ALL WARRANTIES, EXPRESS AND IMPLIED, INCLUDING WITHOUT LIMITATION ANY IMPLIED WARRANTIES OF MERCHANTABILITY, FITNESS FOR A PARTICULAR PURPOSE OR NON-INFRINGEMENT OF THIRD PARTY INTELLECTUAL PROPERTY RIGHTS.

These resources are intended for skilled developers designing with TI products. You are solely responsible for (1) selecting the appropriate TI products for your application, (2) designing, validating and testing your application, and (3) ensuring your application meets applicable standards, and any other safety, security, regulatory or other requirements.

These resources are subject to change without notice. TI grants you permission to use these resources only for development of an application that uses the TI products described in the resource. Other reproduction and display of these resources is prohibited. No license is granted to any other TI intellectual property right or to any third party intellectual property right. TI disclaims responsibility for, and you will fully indemnify TI and its representatives against, any claims, damages, costs, losses, and liabilities arising out of your use of these resources.

TI’s products are provided subject to TI’s Terms of Sale or other applicable terms available either on ti.com or provided in conjunction with such TI products. TI’s provision of these resources does not expand or otherwise alter TI’s applicable warranties or warranty disclaimers for TI products.

TI objects to and rejects any additional or different terms you may have proposed.

Mailing Address: Texas Instruments, Post Office Box 655303, Dallas, Texas 75265
Copyright © 2022, Texas Instruments Incorporated