- **Designed to Reduce Reflection Noise**
- **Repetitive Peak Forward Current to 200 mA**
- **12-Bit Array Structure Suited for Bus-Oriented Systems**

D, N, NS, OR PW PACKAGE
(TOP VIEW)

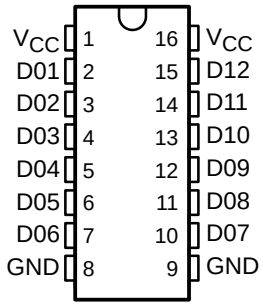

description/ordering information

This Schottky barrier diode bus-termination array is designed to reduce reflection noise on memory bus lines. This device consists of a 12-bit high-speed Schottky diode array suitable for clamping to V_{CC} and/or GND.

ORDERING INFORMATION

T_A	PACKAGE†		ORDERABLE PART NUMBER	TOP-SIDE MARKING
0°C to 70°C	PDIP – N	Tube	SN74S1051N	SN74S1051N
	SOIC – D	Tube	SN74S1051D	S1051
		Tape and reel	SN74S1051DR	
	SOP – NS	Tape and reel	SN74S1051NSR	74S1051
	TSSOP – PW	Tape and reel	SN74S1051PWR	S1051

† Package drawings, standard packing quantities, thermal data, symbolization, and PCB design guidelines are available at www.ti.com/sc/package.

schematic diagrams

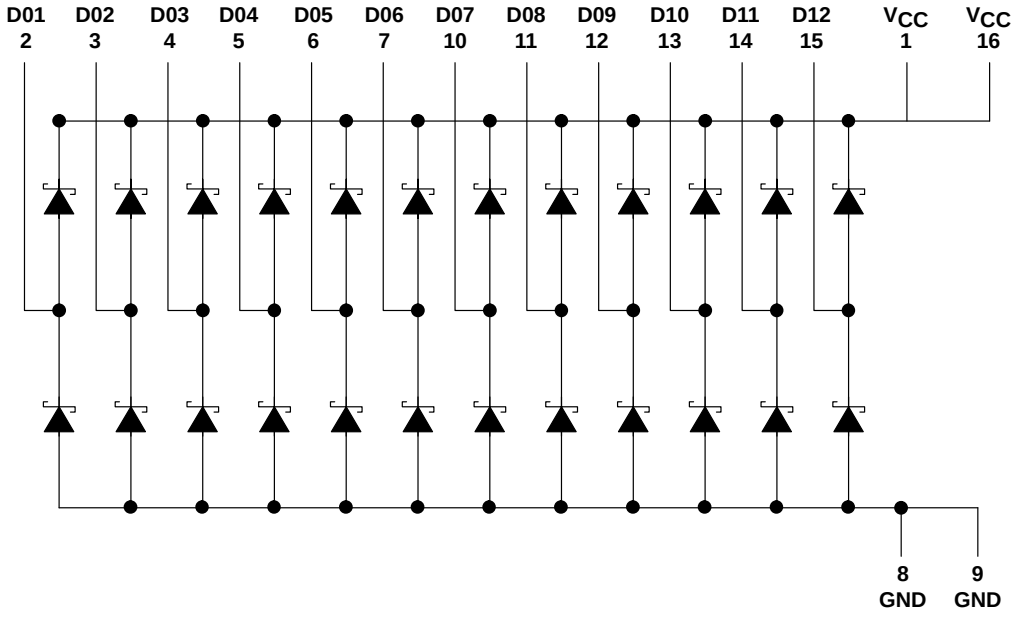

Please be aware that an important notice concerning availability, standard warranty, and use in critical applications of Texas Instruments semiconductor products and disclaimers thereto appears at the end of this data sheet.

PRODUCTION DATA information is current as of publication date. Products conform to specifications per the terms of Texas Instruments standard warranty. Production processing does not necessarily include testing of all parameters.

Copyright © 2003, Texas Instruments Incorporated

absolute maximum ratings over operating free-air temperature range (unless otherwise noted)†

Steady-state reverse voltage, V_R . . . . . 7 V
Continuous forward current, I_F: Any D terminal from GND or to V_{CC} . . . . . 50 mA
Total through all GND or V_{CC} terminals . . . . . 170 mA
Repetitive peak forward current‡, I_{FRM}: Any D terminal from GND or V_{CC} . . . . . 200 mA
Total through all GND or V_{CC} terminals . . . . . 1 A
Package thermal impedance, θ_{JA} (see Note 1): D package . . . . . 73°C/W
N package . . . . . 67°C/W
NS package . . . . . 64°C/W
PW package . . . . . 108°C/W
Operating free-air temperature range . . . . . 0°C to 70°C
Storage temperature range, T_{stg} . . . . . –65°C to 150°C

† Stresses beyond those listed under "absolute maximum ratings" may cause permanent damage to the device. These are stress ratings only, and functional operation of the device at these or any other conditions beyond those indicated under "recommended operating conditions" is not implied. Exposure to absolute-maximum-rated conditions for extended periods may affect device reliability.
‡ These values apply for $t_w \leq 100$ µs, duty cycle ≤ 20%.
NOTE 1: The package thermal impedance is calculated in accordance with JESD 51-7.

electrical characteristics over recommended operating free-air temperature range (unless otherwise noted)

single-diode operation (see Note 2)

PARAMETER		TEST CONDITIONS		MIN	TYP§	MAX	UNIT
V_F	Static forward voltage	To V_{CC}	I_F = 18 mA		0.85	1.05	V
			I_F = 50 mA		1.05	1.3	
		From GND	I_F = 18 mA		0.75	0.95	
			I_F = 50 mA		0.95	1.2	
V_{FM}	Peak forward voltage		I_F = 200 mA		1.45		V
I_R	Static reverse current	To V_{CC}	V_R = 7 V			5	µA
		From GND				5	
C_t	Total capacitance	V_R = 0 V,	f = 1 MHz		8	16	pF
		V_R = 2 V,	f = 1 MHz		4	8	

§ All typical values are at V_{CC} = 5 V, T_A = 25°C.
NOTE 2: Test conditions and limits apply separately to each of the diodes. The diodes not under test are open-circuited during the measurement of these characteristics.

multiple-diode operation

PARAMETER		TEST CONDITIONS		MIN	TYP§	MAX	UNIT
I_x	Internal crosstalk current	Total I_F current = 1 A,	See Note 3		0.8	2	mA
		Total I_F current = 198 mA,	See Note 3		0.02	0.2	

§ All typical values are at V_{CC} = 5 V, T_A = 25°C.
NOTE 3: I_x is measured under the following conditions with one diode static, all others switching:
Switching diodes: t_w = 100 µs, duty cycle = 20%
Static diode: V_R = 5 V
The static diode input current is the internal crosstalk current, I_x.

switching characteristics over recommended operating free-air temperature range (unless otherwise noted) (see Figures 1 and 2)

PARAMETER		TEST CONDITIONS	MIN	TYP	MAX	UNIT
t_{rr}	Reverse recovery time	I_F = 10 mA, $I_{RM(REC)}$ = 10 mA, $I_{R(REC)}$ = 1 mA, R_L = 100 Ω		8	16	ns

PARAMETER MEASUREMENT INFORMATION

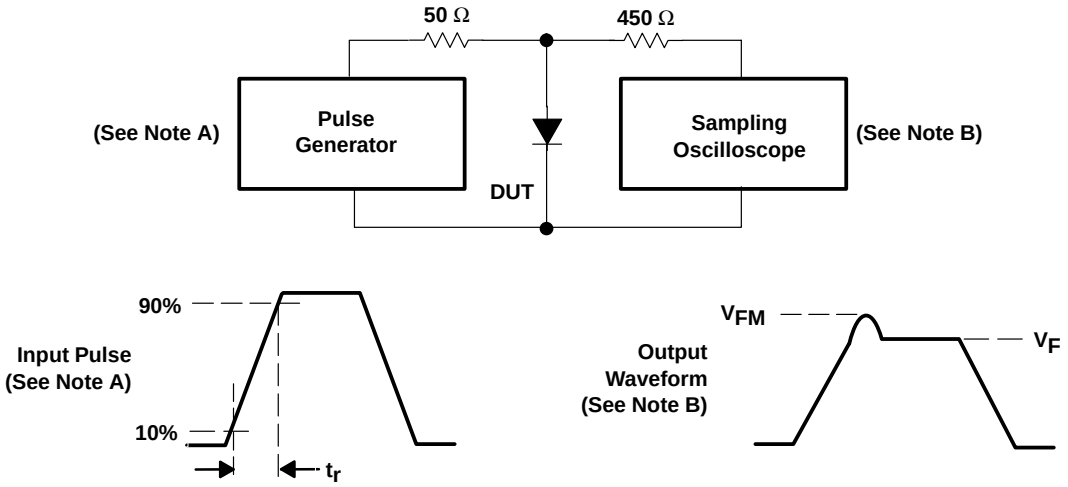

NOTES: A. The input pulse is supplied by a pulse generator having the following characteristics: t_r = 20 ns, Z_O = 50 Ω, freq = 500 Hz, duty cycle = 1%.
B. The output waveform is monitored by an oscilloscope having the following characteristics: $t_r \leq$ 350 ps, R_i = 50 Ω, $C_i \leq$ 5 pF.

Figure 1. Forward Recovery Voltage

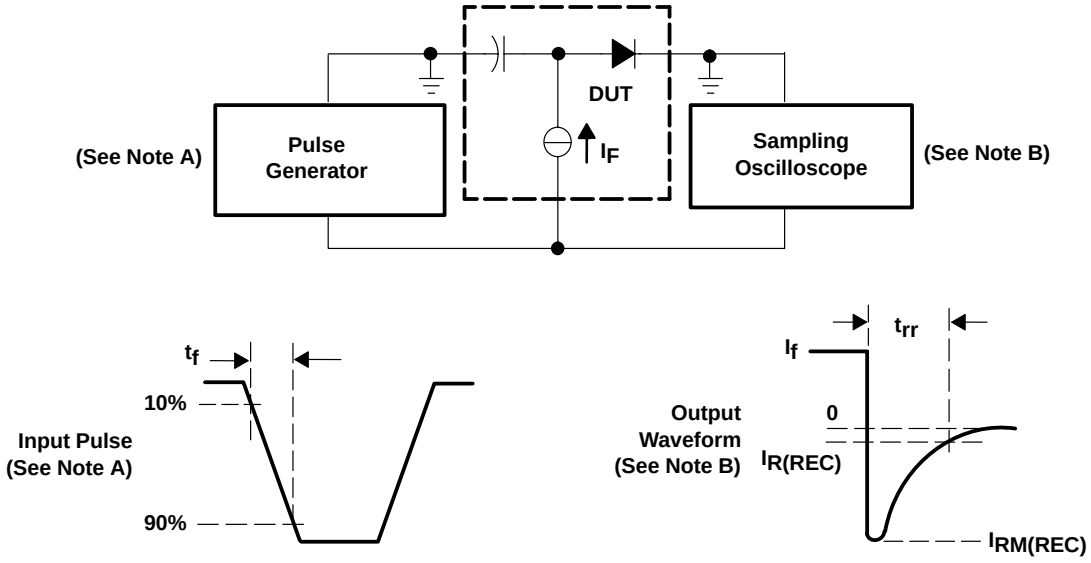

NOTES: A. The input pulse is supplied by a pulse generator having the following characteristics: t_f = 0.5 ns, Z_O = 50 Ω, $t_W \geq$ 50 ns, duty cycle = 1%.
B. The output waveform is monitored by an oscilloscope having the following characteristics: $t_r \leq$ 350 ps, R_i = 50 Ω, $C_i \leq$ 5 pF.

Figure 2. Reverse Recovery Time

APPLICATION INFORMATION

Large negative transients at the inputs of memory devices (DRAMs, SRAMs, EPROMs, etc.) or on the CLOCK lines of many clocked devices can result in improper operation of the devices. The SN74S1051 diode termination array helps suppress negative transients caused by transmission-line reflections, crosstalk, and switching noise.

Diode terminations have several advantages when compared to resistor termination schemes. Split-resistor or Thevenin-equivalent termination can cause a substantial increase in power consumption. The use of a single resistor to ground to terminate a line usually results in degradation of the output high level, resulting in reduced noise immunity. Series damping resistors placed on the outputs of the driver reduce negative transients, but they also can increase propagation delays down the line because a series resistor reduces the output drive capability of the driving device. Diode terminations have none of these drawbacks.

The operation of the diode arrays in reducing negative transients is explained in the following figures. The diode conducts current when the voltage reaches a negative value large enough for the diode to turn on. Suppression of negative transients is tracked by the current-voltage characteristic curve for that diode. Typical current-versus-voltage curves for the SN74S1051 are shown in Figures 3 and 4.

To illustrate how the diode arrays act to reduce negative transients at the end of a transmission line, the test setup in Figure 5 was evaluated. The resulting waveforms with and without the diode are shown in Figure 6.

The maximum effectiveness of the diode arrays in suppressing negative transients occurs when the diode arrays are placed at the end of a line and/or the end of a long stub branching off a main transmission line. The diodes can also reduce the negative transients that occur due to discontinuities in the middle of a line. An example of this is a slot in a backplane that is provided for an add-on card.

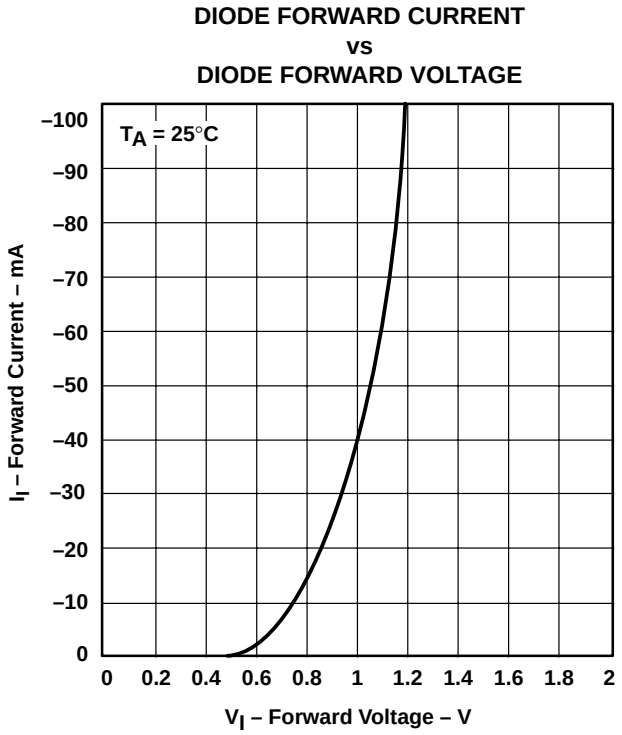

Figure 3. Typical Input Current vs Input Voltage (Lower Diode)

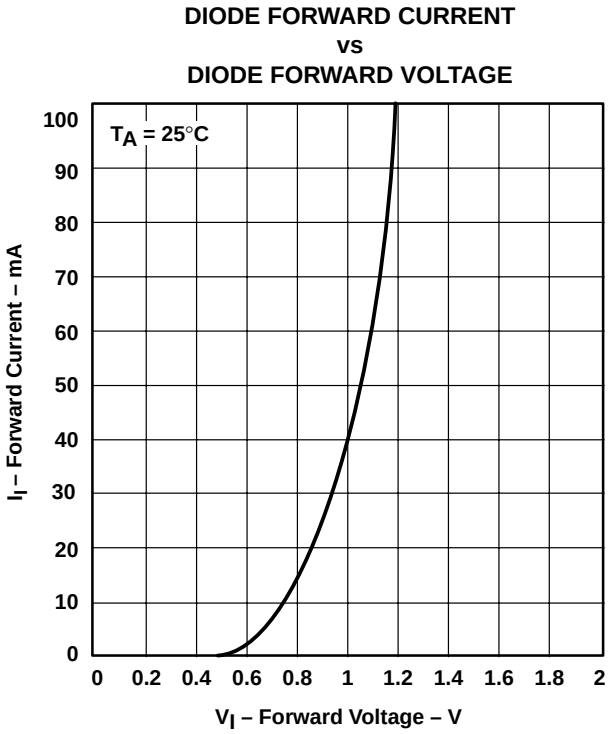

Figure 4. Typical Input Current vs Input Voltage (Upper Diode)

APPLICATION INFORMATION

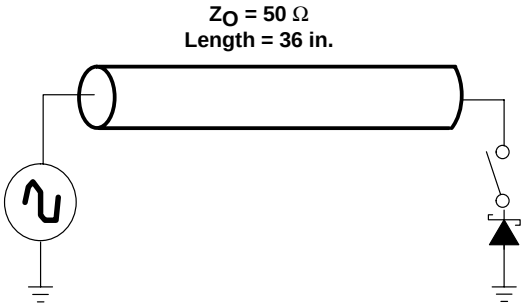

Figure 5. Diode Test Setup

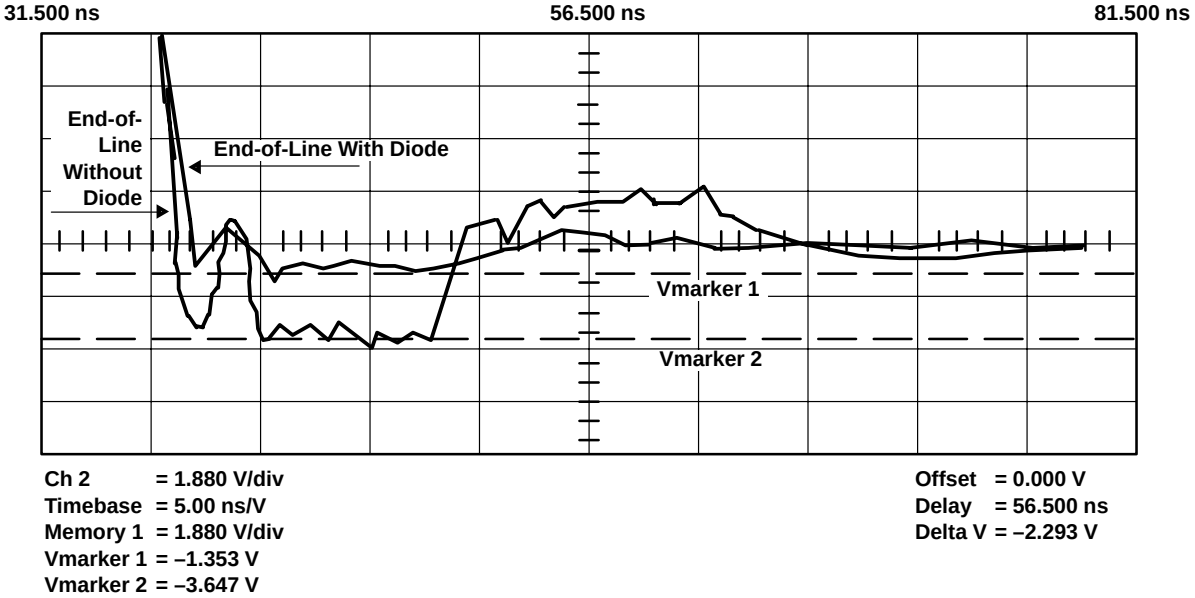

Figure 6. Reduction of Negative Transients at the End of a Transmission Line

PACKAGING INFORMATION

Orderable Device	Status (1)	Package Type	Package Drawing	Pins	Package Qty	Eco Plan (2)	Lead finish/ Ball material (6)	MSL Peak Temp (3)	Op Temp (°C)	Device Marking (4/5)	Samples
SN74S1051D	ACTIVE	SOIC	D	16	40	RoHS & Green	NIPDAU	Level-1-260C-UNLIM	0 to 70	S1051	Samples
SN74S1051DR	ACTIVE	SOIC	D	16	2500	RoHS & Green	NIPDAU	Level-1-260C-UNLIM	0 to 70	S1051	Samples
SN74S1051N	ACTIVE	PDIP	N	16	25	RoHS & Green	NIPDAU	N / A for Pkg Type	0 to 70	SN74S1051N	Samples
SN74S1051NSR	ACTIVE	SO	NS	16	2000	RoHS & Green	NIPDAU	Level-1-260C-UNLIM	0 to 70	74S1051	Samples
SN74S1051PW	ACTIVE	TSSOP	PW	16	90	RoHS & Green	NIPDAU	Level-1-260C-UNLIM	0 to 70	S1051	Samples
SN74S1051PWR	ACTIVE	TSSOP	PW	16	2000	RoHS & Green	NIPDAU	Level-1-260C-UNLIM	0 to 70	S1051	Samples

(1) The marketing status values are defined as follows:
ACTIVE: Product device recommended for new designs.
LIFEBUY: TI has announced that the device will be discontinued, and a lifetime-buy period is in effect.
NRND: Not recommended for new designs. Device is in production to support existing customers, but TI does not recommend using this part in a new design.
PREVIEW: Device has been announced but is not in production. Samples may or may not be available.
OBSOLETE: TI has discontinued the production of the device.

(2) **RoHS:** TI defines "RoHS" to mean semiconductor products that are compliant with the current EU RoHS requirements for all 10 RoHS substances, including the requirement that RoHS substance do not exceed 0.1% by weight in homogeneous materials. Where designed to be soldered at high temperatures, "RoHS" products are suitable for use in specified lead-free processes. TI may reference these types of products as "Pb-Free".
RoHS Exempt: TI defines "RoHS Exempt" to mean products that contain lead but are compliant with EU RoHS pursuant to a specific EU RoHS exemption.
Green: TI defines "Green" to mean the content of Chlorine (Cl) and Bromine (Br) based flame retardants meet JS709B low halogen requirements of <=1000ppm threshold. Antimony trioxide based flame retardants must also meet the <=1000ppm threshold requirement.

(3) MSL, Peak Temp. - The Moisture Sensitivity Level rating according to the JEDEC industry standard classifications, and peak solder temperature.

(4) There may be additional marking, which relates to the logo, the lot trace code information, or the environmental category on the device.

(5) Multiple Device Markings will be inside parentheses. Only one Device Marking contained in parentheses and separated by a "~" will appear on a device. If a line is indented then it is a continuation of the previous line and the two combined represent the entire Device Marking for that device.

(6) Lead finish/Ball material - Orderable Devices may have multiple material finish options. Finish options are separated by a vertical ruled line. Lead finish/Ball material values may wrap to two lines if the finish value exceeds the maximum column width.

Important Information and Disclaimer: The information provided on this page represents TI's knowledge and belief as of the date that it is provided. TI bases its knowledge and belief on information provided by third parties, and makes no representation or warranty as to the accuracy of such information. Efforts are underway to better integrate information from third parties. TI has taken and continues to take reasonable steps to provide representative and accurate information but may not have conducted destructive testing or chemical analysis on incoming materials and chemicals. TI and TI suppliers consider certain information to be proprietary, and thus CAS numbers and other limited information may not be available for release.

In no event shall TI's liability arising out of such information exceed the total purchase price of the TI part(s) at issue in this document sold by TI to Customer on an annual basis.

TAPE AND REEL INFORMATION

REEL DIMENSIONS

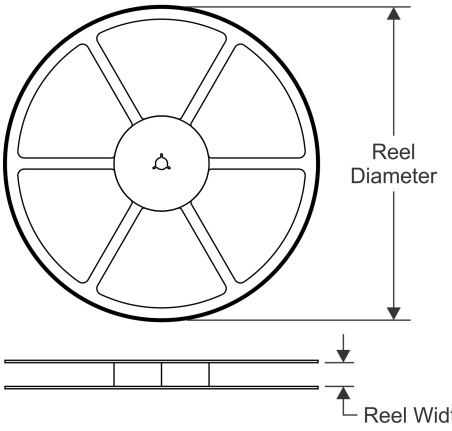

TAPE DIMENSIONS

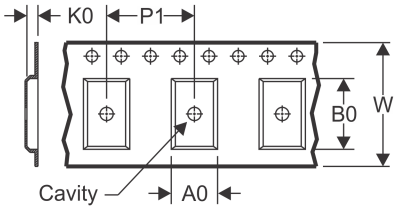

A0	Dimension designed to accommodate the component width
B0	Dimension designed to accommodate the component length
K0	Dimension designed to accommodate the component thickness
W	Overall width of the carrier tape
P1	Pitch between successive cavity centers

QUADRANT ASSIGNMENTS FOR PIN 1 ORIENTATION IN TAPE

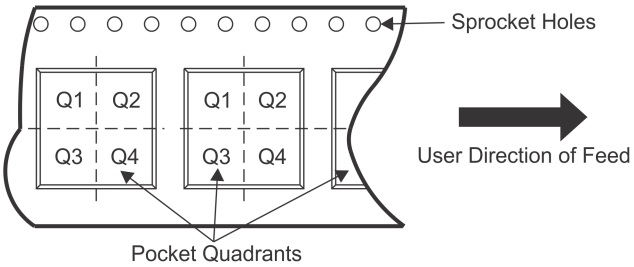

*All dimensions are nominal

Device	Package Type	Package Drawing	Pins	SPQ	Reel Diameter (mm)	Reel Width W1 (mm)	A0 (mm)	B0 (mm)	K0 (mm)	P1 (mm)	W (mm)	Pin1 Quadrant
SN74S1051DR	SOIC	D	16	2500	330.0	16.4	6.5	10.3	2.1	8.0	16.0	Q1
SN74S1051NSR	SO	NS	16	2000	330.0	16.4	8.2	10.5	2.5	12.0	16.0	Q1
SN74S1051PWR	TSSOP	PW	16	2000	330.0	12.4	6.9	5.6	1.6	8.0	12.0	Q1

TAPE AND REEL BOX DIMENSIONS

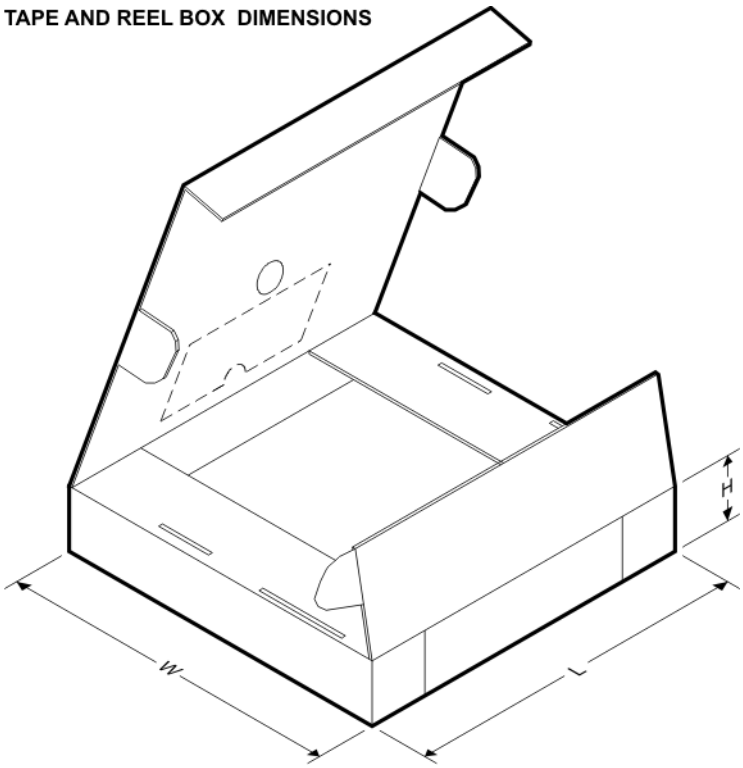

*All dimensions are nominal

Device	Package Type	Package Drawing	Pins	SPQ	Length (mm)	Width (mm)	Height (mm)
SN74S1051DR	SOIC	D	16	2500	340.5	336.1	32.0
SN74S1051NSR	SO	NS	16	2000	853.0	449.0	35.0
SN74S1051PWR	TSSOP	PW	16	2000	853.0	449.0	35.0

TUBE

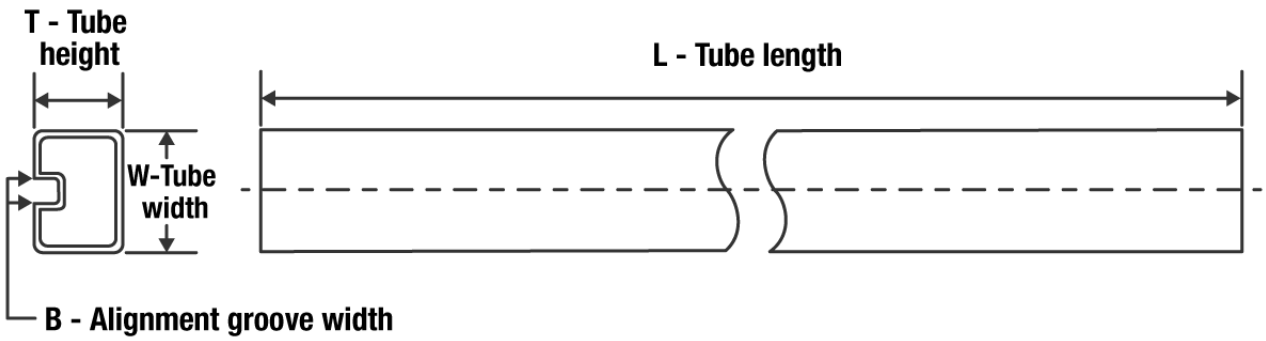

*All dimensions are nominal

Device	Package Name	Package Type	Pins	SPQ	L (mm)	W (mm)	T (µm)	B (mm)
SN74S1051D	D	SOIC	16	40	507	8	3940	4.32
SN74S1051N	N	PDIP	16	25	506	13.97	11230	4.32
SN74S1051N	N	PDIP	16	25	506	13.97	11230	4.32
SN74S1051PW	PW	TSSOP	16	90	530	10.2	3600	3.5

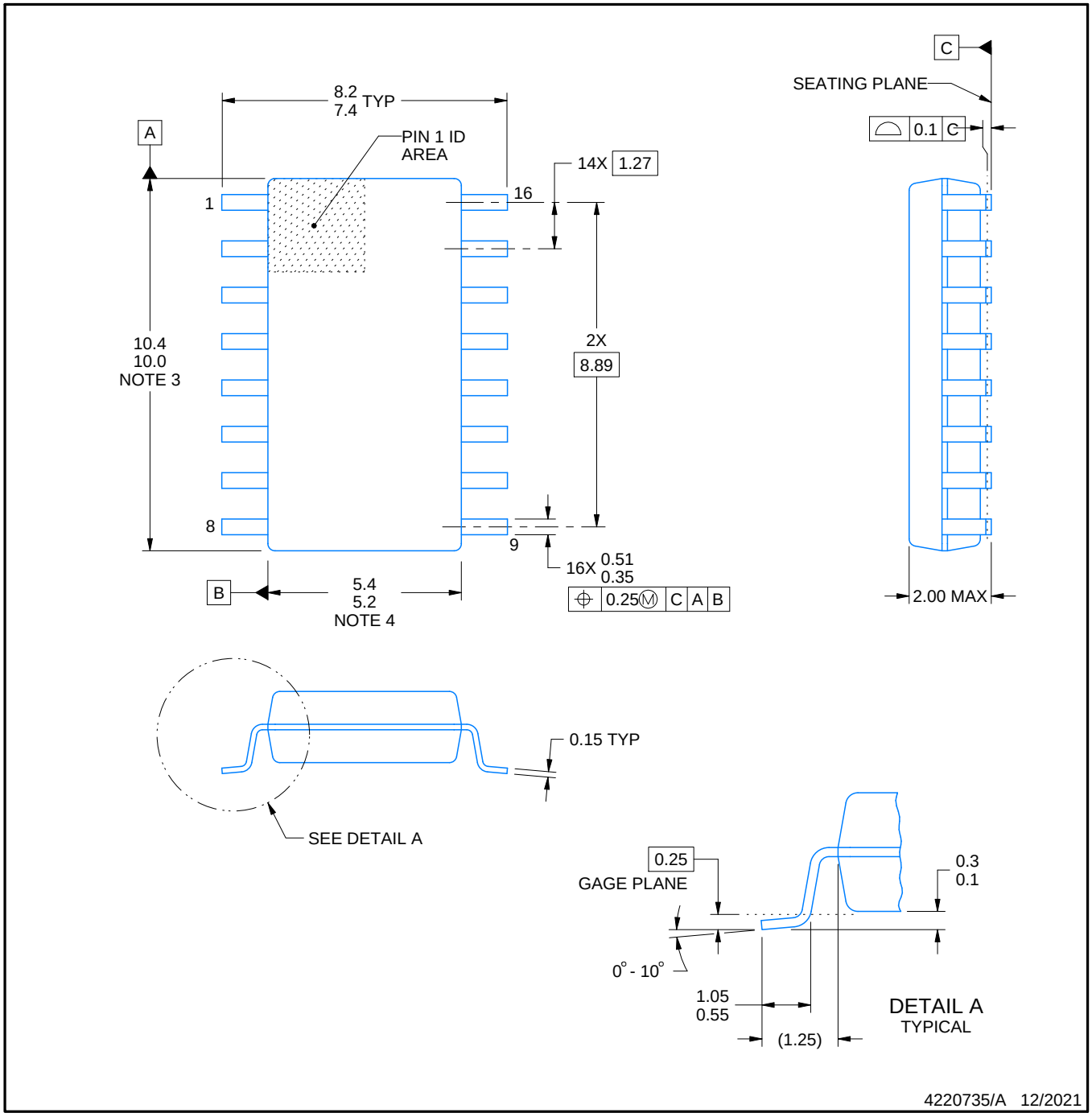

NOTES:

1. All linear dimensions are in millimeters. Dimensions in parenthesis are for reference only. Dimensioning and tolerancing per ASME Y14.5M.
2. This drawing is subject to change without notice.
3. This dimension does not include mold flash, protrusions, or gate burrs. Mold flash, protrusions, or gate burrs shall not exceed 0.15 mm, per side.
4. This dimension does not include interlead flash. Interlead flash shall not exceed 0.25 mm, per side.

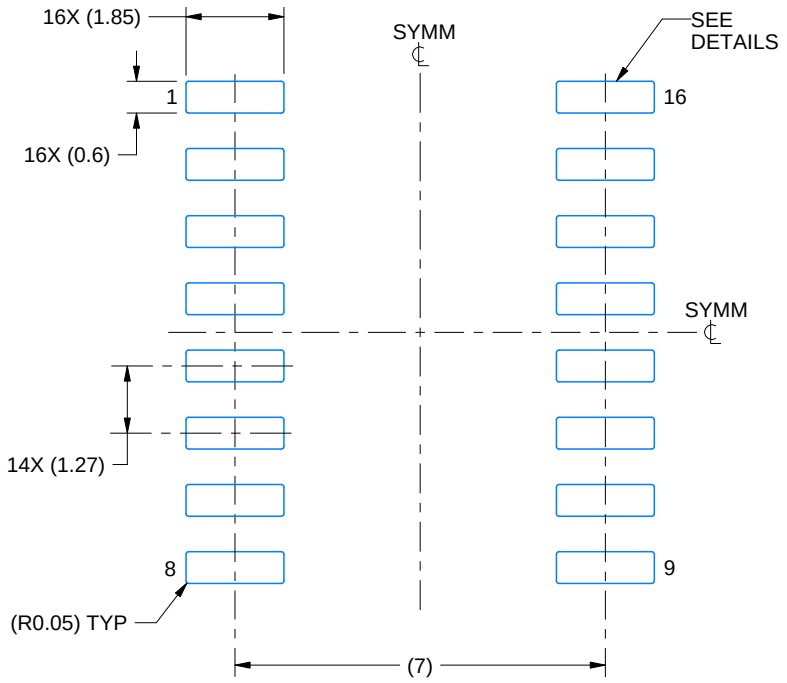

LAND PATTERN EXAMPLE
SCALE:7X

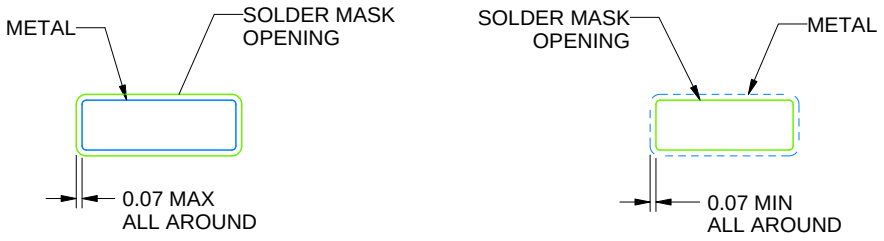

NON SOLDER MASK DEFINED

SOLDER MASK DEFINED

SOLDER MASK DETAILS

4220735/A 12/2021

NOTES: (continued)

5. Publication IPC-7351 may have alternate designs.
6. Solder mask tolerances between and around signal pads can vary based on board fabrication site.

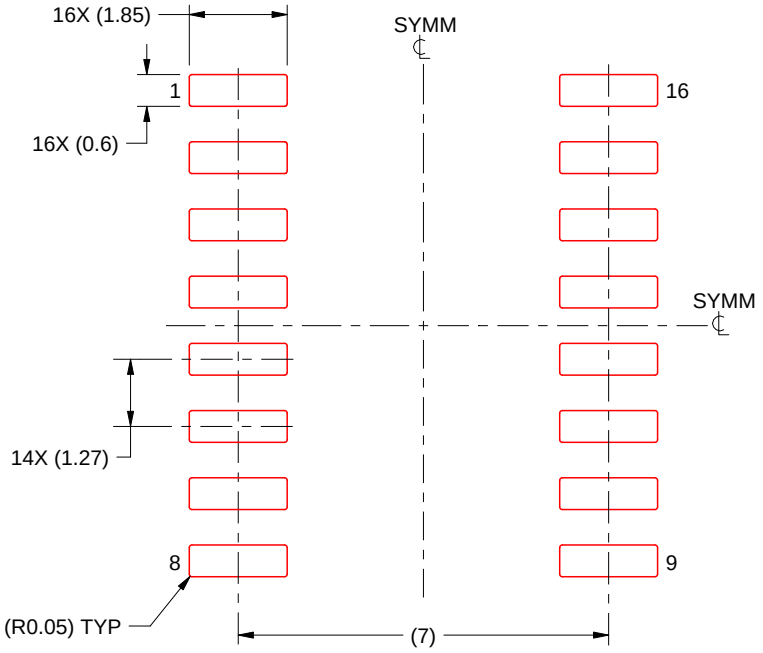

SOLDER PASTE EXAMPLE
BASED ON 0.125 mm THICK STENCIL
SCALE:7X

4220735/A 12/2021

NOTES: (continued)

7. Laser cutting apertures with trapezoidal walls and rounded corners may offer better paste release. IPC-7525 may have alternate design recommendations.
8. Board assembly site may have different recommendations for stencil design.

D (R–PDSO–G16) PLASTIC SMALL OUTLINE

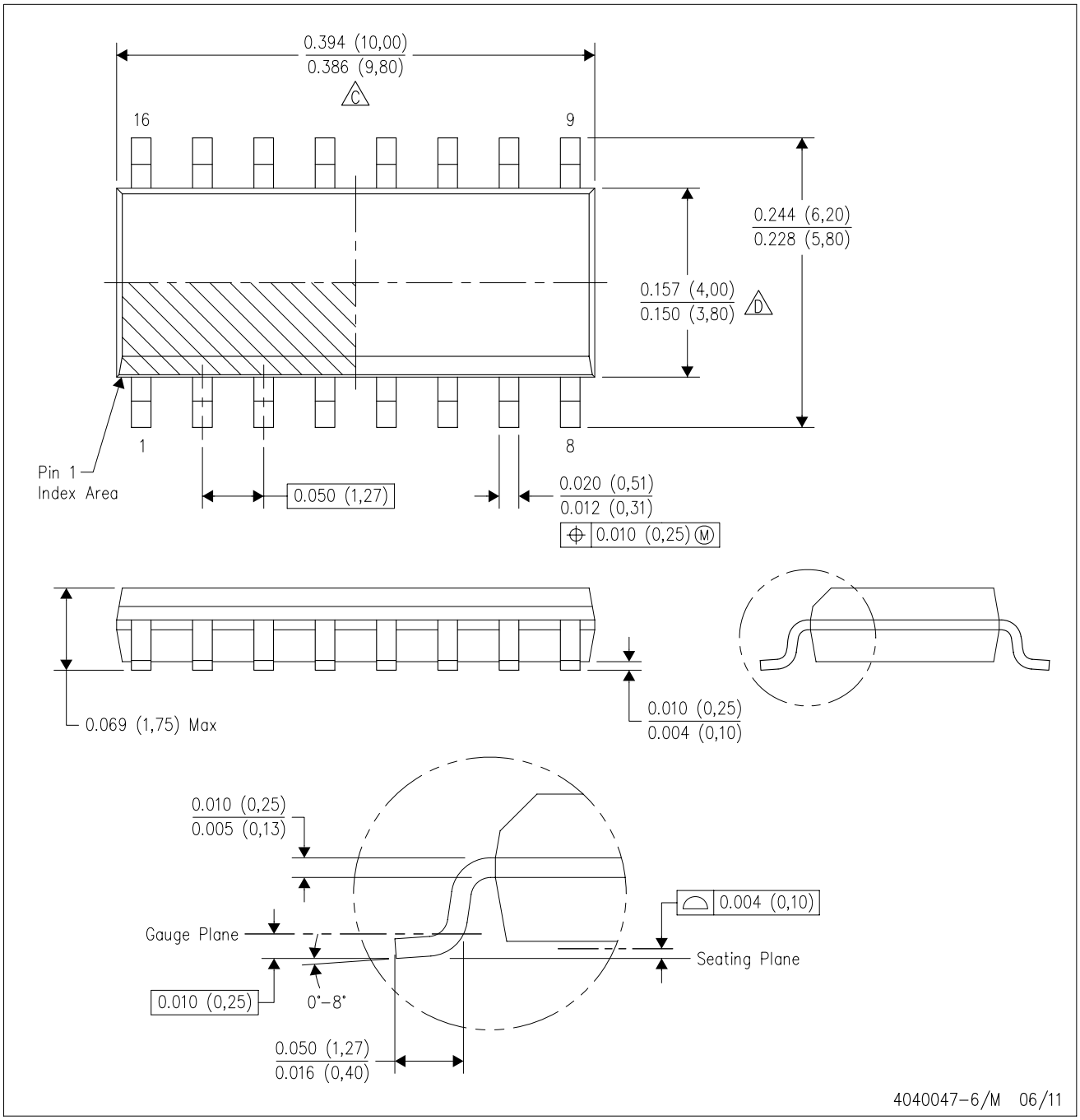

NOTES:
A. All linear dimensions are in inches (millimeters).
B. This drawing is subject to change without notice.
C. Body length does not include mold flash, protrusions, or gate burrs. Mold flash, protrusions, or gate burrs shall not exceed 0.006 (0,15) each side.
D. Body width does not include interlead flash. Interlead flash shall not exceed 0.017 (0,43) each side.
E. Reference JEDEC MS–012 variation AC.

D (R–PDSO–G16) PLASTIC SMALL OUTLINE

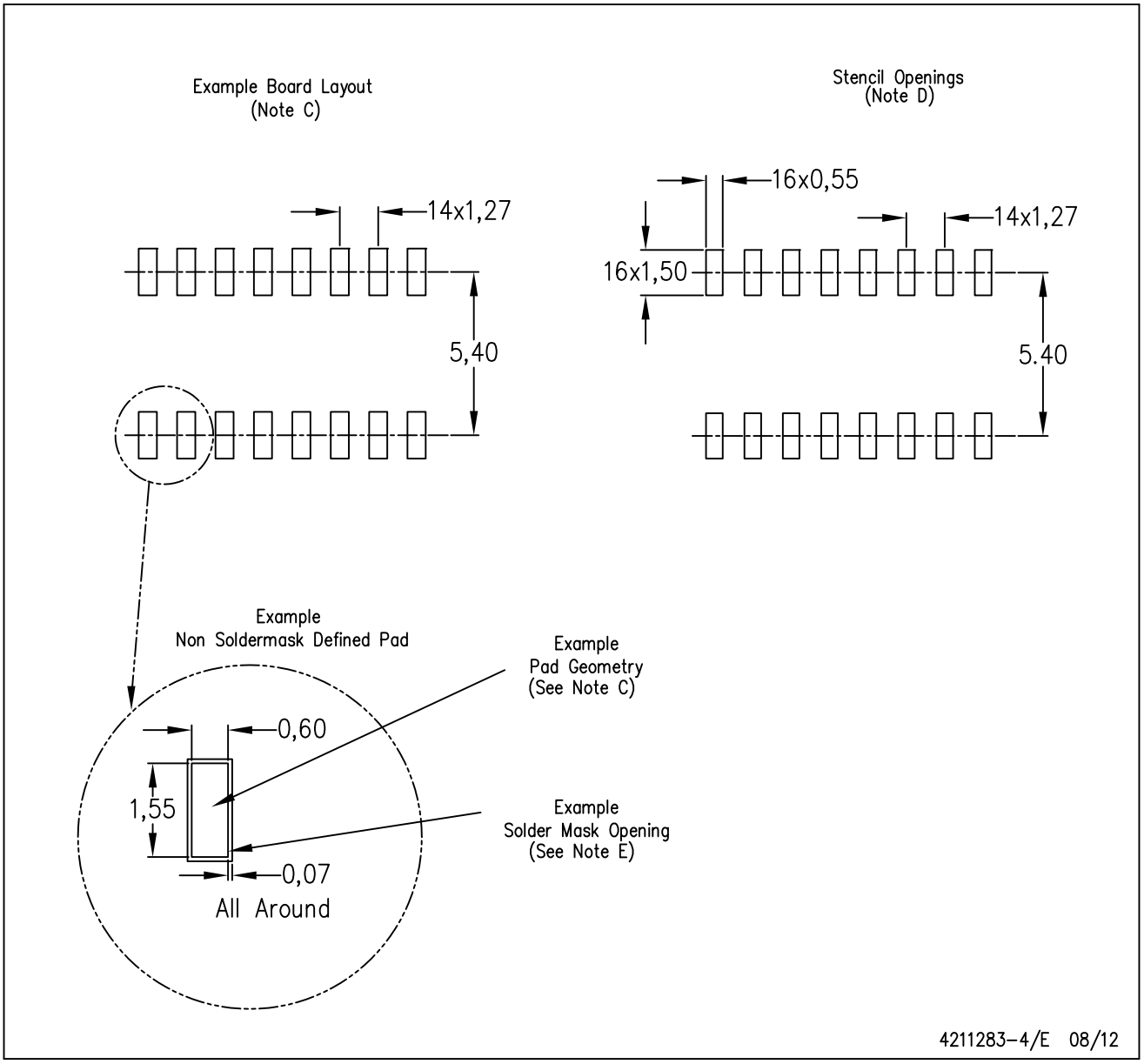

NOTES:
A. All linear dimensions are in millimeters.
B. This drawing is subject to change without notice.
C. Publication IPC–7351 is recommended for alternate designs.
D. Laser cutting apertures with trapezoidal walls and also rounding corners will offer better paste release. Customers should contact their board assembly site for stencil design recommendations. Refer to IPC–7525 for other stencil recommendations.
E. Customers should contact their board fabrication site for solder mask tolerances between and around signal pads.

PW0016A

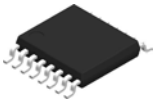

PACKAGE OUTLINE

TSSOP - 1.2 mm max height

SMALL OUTLINE PACKAGE

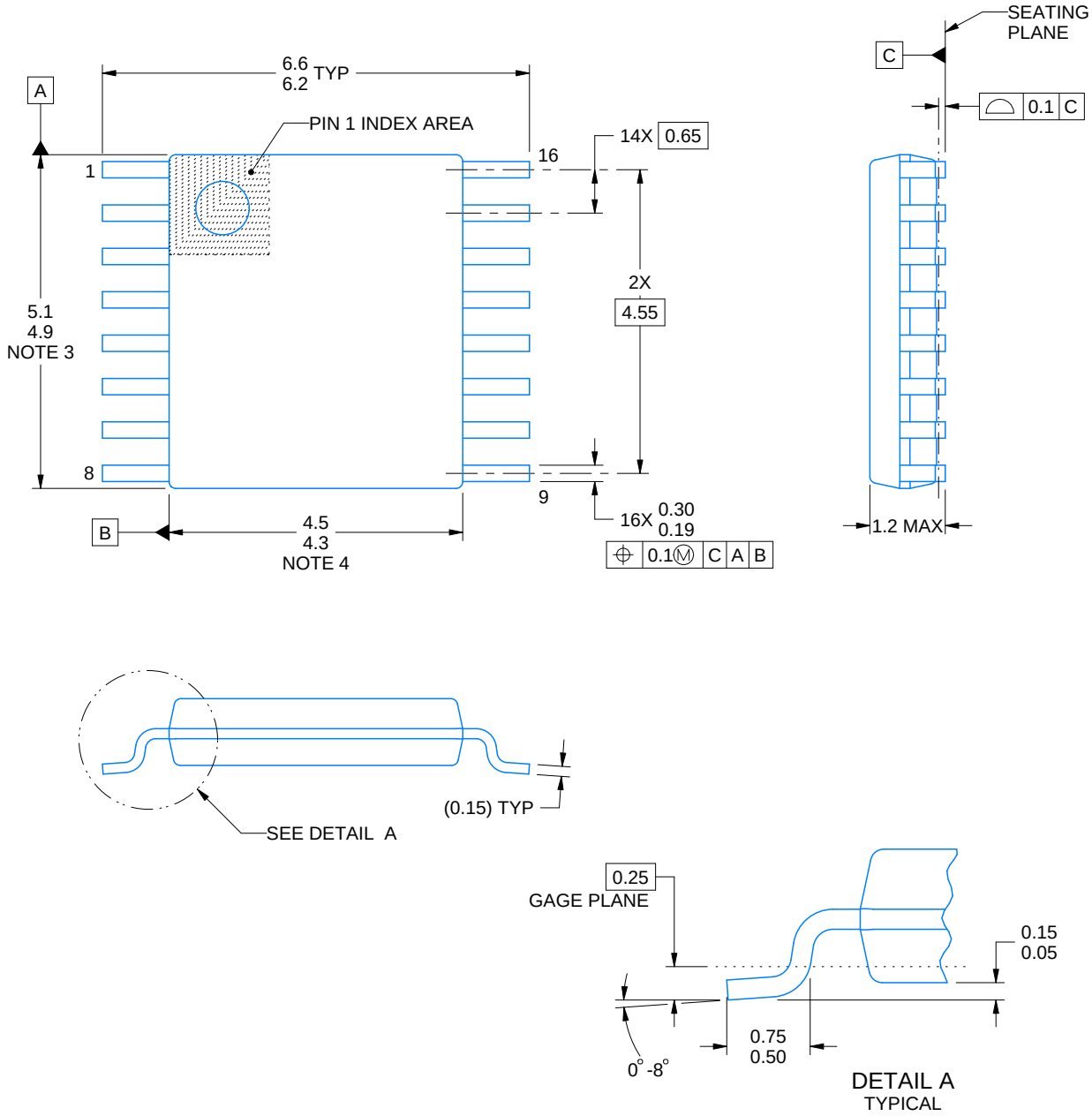

NOTES:

1. All linear dimensions are in millimeters. Any dimensions in parenthesis are for reference only. Dimensioning and tolerancing per ASME Y14.5M.
2. This drawing is subject to change without notice.
3. This dimension does not include mold flash, protrusions, or gate burrs. Mold flash, protrusions, or gate burrs shall not exceed 0.15 mm per side.
4. This dimension does not include interlead flash. Interlead flash shall not exceed 0.25 mm per side.
5. Reference JEDEC registration MO-153.

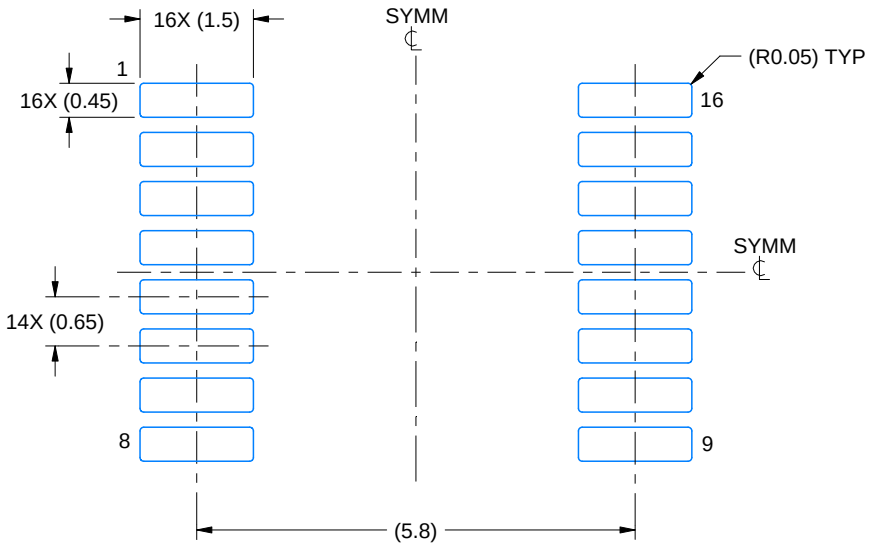

LAND PATTERN EXAMPLE
EXPOSED METAL SHOWN
SCALE: 10X

NON-SOLDER MASK DEFINED (PREFERRED)

SOLDER MASK DEFINED

SOLDER MASK DETAILS

4220204/A 02/2017

NOTES: (continued)

6. Publication IPC-7351 may have alternate designs.
7. Solder mask tolerances between and around signal pads can vary based on board fabrication site.

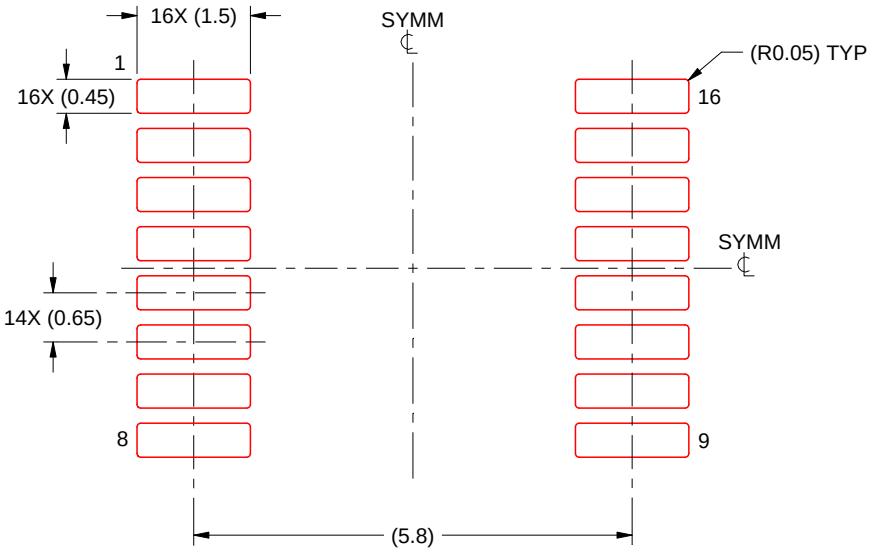

SOLDER PASTE EXAMPLE
BASED ON 0.125 mm THICK STENCIL
SCALE: 10X

4220204/A 02/2017

NOTES: (continued)

8. Laser cutting apertures with trapezoidal walls and rounded corners may offer better paste release. IPC-7525 may have alternate design recommendations.
9. Board assembly site may have different recommendations for stencil design.

MECHANICAL DATA

NS (R-PDSO-G)** **PLASTIC SMALL-OUTLINE PACKAGE**

14-PINS SHOWN

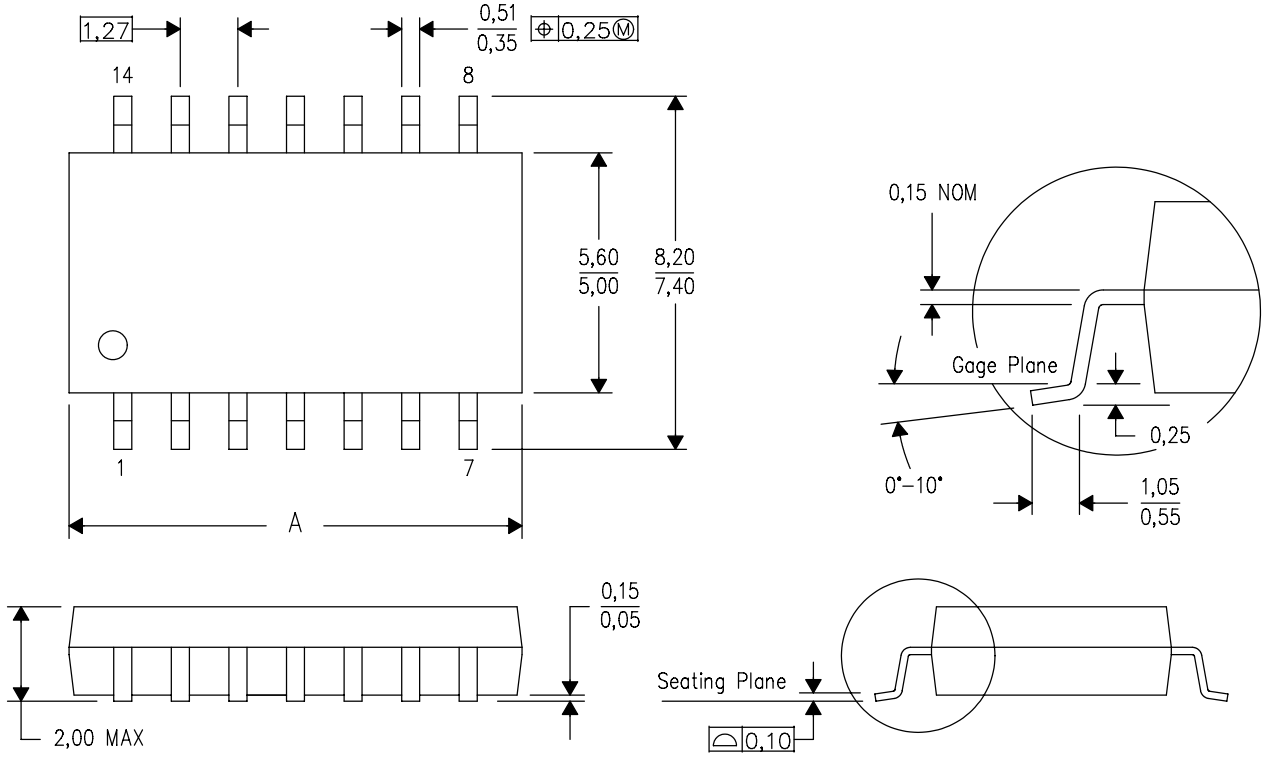

DIM \ PINS **	14	16	20	24
A MAX	10,50	10,50	12,90	15,30
A MIN	9,90	9,90	12,30	14,70

4040062/C 03/03

NOTES:
A. All linear dimensions are in millimeters.
B. This drawing is subject to change without notice.
C. Body dimensions do not include mold flash or protrusion, not to exceed 0,15.

N (R–PDIP–T**) PLASTIC DUAL–IN–LINE PACKAGE

16 PINS SHOWN

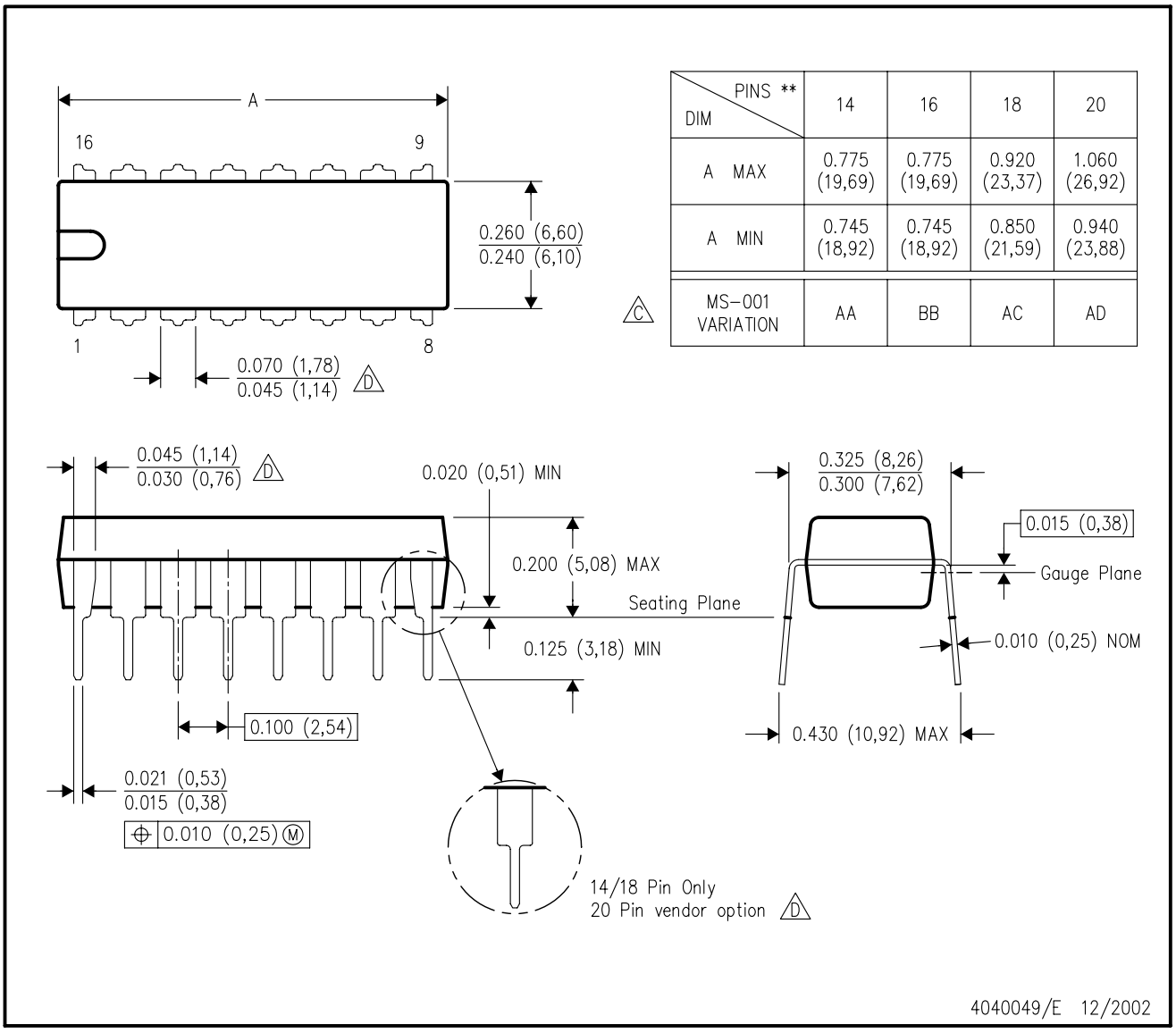

DIM \ PINS **	14	16	18	20
A MAX	0.775 (19,69)	0.775 (19,69)	0.920 (23,37)	1.060 (26,92)
A MIN	0.745 (18,92)	0.745 (18,92)	0.850 (21,59)	0.940 (23,88)
MS–001 VARIATION (C)	AA	BB	AC	AD

NOTES:
A. All linear dimensions are in inches (millimeters).
B. This drawing is subject to change without notice.
C. Falls within JEDEC MS–001, except 18 and 20 pin minimum body length (Dim A).
D. The 20 pin end lead shoulder width is a vendor option, either half or full width.

IMPORTANT NOTICE AND DISCLAIMER

TI PROVIDES TECHNICAL AND RELIABILITY DATA (INCLUDING DATA SHEETS), DESIGN RESOURCES (INCLUDING REFERENCE DESIGNS), APPLICATION OR OTHER DESIGN ADVICE, WEB TOOLS, SAFETY INFORMATION, AND OTHER RESOURCES “AS IS” AND WITH ALL FAULTS, AND DISCLAIMS ALL WARRANTIES, EXPRESS AND IMPLIED, INCLUDING WITHOUT LIMITATION ANY IMPLIED WARRANTIES OF MERCHANTABILITY, FITNESS FOR A PARTICULAR PURPOSE OR NON-INFRINGEMENT OF THIRD PARTY INTELLECTUAL PROPERTY RIGHTS.

These resources are intended for skilled developers designing with TI products. You are solely responsible for (1) selecting the appropriate TI products for your application, (2) designing, validating and testing your application, and (3) ensuring your application meets applicable standards, and any other safety, security, regulatory or other requirements.

These resources are subject to change without notice. TI grants you permission to use these resources only for development of an application that uses the TI products described in the resource. Other reproduction and display of these resources is prohibited. No license is granted to any other TI intellectual property right or to any third party intellectual property right. TI disclaims responsibility for, and you will fully indemnify TI and its representatives against, any claims, damages, costs, losses, and liabilities arising out of your use of these resources.

TI’s products are provided subject to TI’s Terms of Sale or other applicable terms available either on ti.com or provided in conjunction with such TI products. TI’s provision of these resources does not expand or otherwise alter TI’s applicable warranties or warranty disclaimers for TI products.

TI objects to and rejects any additional or different terms you may have proposed.

Mailing Address: Texas Instruments, Post Office Box 655303, Dallas, Texas 75265
Copyright © 2022, Texas Instruments Incorporated