采用 Hybrid-Pro 算法的 TAS5825P 4.5V 至 26.4V、38W 立体声、数字输入、高效闭环 D 类音频放大器

1 特性

- 采用 Hybrid-Pro 的高效 D 类操作：
  - 与固定电源电压解决方案相比，电池寿命延长约 50%
  - 电源效率高于 90%，R_{DS}on 为 90mΩ
  - 低静态电流，12V PVDD 时小于 20mA
- 支持多路输出配置：
  - 1 × 53W，1.0 模式（4Ω，22V，THD+N=1%）
  - 1 × 65W，1.0 模式（4Ω，22V，THD+N= 10%）
  - 2 × 30W，2.0 模式（8Ω，24V，THD+N=1%）
  - 2 × 38W，2.0 模式（8Ω，24V，THD+N= 10%）
- 优异的音频性能：
  - 1W、1kHz、PVDD = 12V 的条件下，THD+N ≤ 0.03%
  - SNR ≥ 110 dB（A 加权），ICN ≤ 35 µVRMS
- 灵活的音频 I/O：
  - 支持 32、44.1、48、88.2、96kHz 采样率
  - 支持 I^2S、LJ、RJ、TDM 格式
  - 支持三线制数字音频接口
- 灵活的处理 功能：
  - 3 频带高级 DRC + AGL，2 × 15 BQ
  - PVDD 检测可避免电压轨下降时的削波失真
  - 高达 4ms 的前向延迟缓冲器，用于 Hybrid-Pro 算法音频信号跟踪
  - 可选 8 或 16 个 Hybrid-Pro 直流/直流控制阶跃，最大峰值采样保持时间为 10ms
- 灵活的电源配置：
  - PVDD：4.5V 至 26.4V
  - DVDD 和 I/O：1.8V 或 3.3V
- 出色的集成式自保护功能：
  - 过流错误 (OCE)
  - 逐周期电流限制
  - 过热警告 (OTW)
  - 过热错误 (OTE)
  - 欠压/过压锁定（UVLO、OVLO）
- 可轻松进行系统集成：
  - I^2C 软件控制
  - 减小了解决方案的尺寸：
    - 小型 5 x 5mm 封装
    - 与开环 D 类器件相比，所需的无源器件更少
    - 大多数应用都不需要体积较大的电解电容器

或

2 大型电感器

- 电池供电扬声器
- 机顶盒 (STB)
- 条形音箱或低音炮
- 无线或蓝牙扬声器
- 散热或效率敏感型音频系统

3 说明

TAS5825P 是一款采用先进 Hybrid-Pro 算法的立体声高效闭环音频 D 类音频放大器，可提高系统效率并减少发热而不会产生削波失真。

音频放大器的电源电压 (PVDD) 通常由直流/直流转换器提供。与固定 PVDD 相比，基于音频信号而波动的可变 PVDD 可显著提高效率，降低空闲电流并减少发热。

TAS5825P 的强大音频 DSP 内核实现了一种称为 Hybrid-Pro 的专有算法。Hybrid-Pro 算法可检测即将发生的音频功率需求，并通过 Hybrid-Pro 反馈引脚 (HPFB) 为前直流/直流转换器提供 PWM 控制信号。TAS5825P 支持高达 4ms 的延迟缓冲器，以提前查看音频信号并防止音频削波失真。在各种实验中，TAS5825P 在连续播放音乐时可将 1S 和 2S 电池的运行时间延长 50% 以上。

器件信息(1)

器件型号	封装	封装尺寸（标称值）
TAS5825P	VQFN (32) RHB	5.00mm × 5.00mm

(1) 如需了解所有可用封装，请参阅数据表末尾的可订购产品附录。

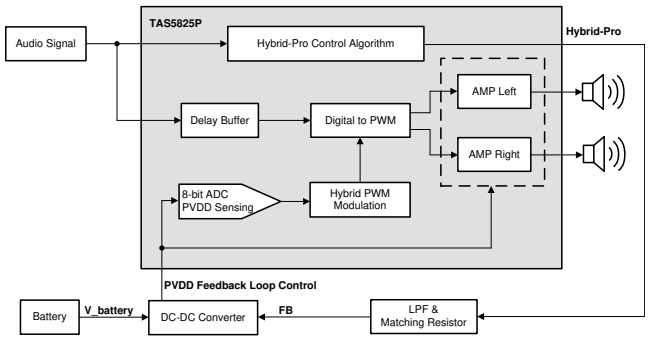

本文档旨在为方便起见，提供有关 TI 产品中文版本的信息，以确认产品的概要。 有关适用的官方英文版本的最新信息，请访问 www.ti.com，其内容始终优先。 TI 不保证翻译的准确性和有效性。 在实际设计之前，请务必参考最新版本的英文版本。

目录

1 特性 ... 1
2 大型电感器 ... 1
3 说明 ... 1
4 修订历史记录 ... 2
5 Device Comparison Table ... 3
6 Pin Configuration and Functions ... 3
7 Specifications ... 5
7.1 Absolute Maximum Ratings ... 5
7.2 ESD Ratings ... 5
7.3 Recommended Operating Conditions ... 5
7.4 Thermal Information ... 5
7.5 Electrical Characteristics ... 6
7.6 Timing Requirements ... 9
7.7 Typical Characteristics ... 10
8 Parameter Measurement Information ... 27
9 Detailed Description ... 28
9.1 Overview ... 28
9.2 Functional Block Diagram ... 28
9.3 Feature Description ... 29
9.4 Device Functional Modes ... 35
9.5 Programming and Control ... 40
9.6 Register Maps ... 46
10 Application and Implementation ... 80
10.1 Application Information ... 80
10.2 Typical Applications ... 82
11 Power Supply Recommendations ... 87
11.1 DVDD Supply ... 87
11.2 PVDD Supply ... 88
12 Layout ... 89
12.1 Layout Guidelines ... 89
12.2 Layout Example ... 91
13 器件和文档支持 ... 93
13.1 器件支持 ... 93
13.2 接收文档更新通知 ... 93
13.3 社区资源 ... 94
13.4 商标 ... 94
13.5 静电放电警告 ... 94
13.6 Glossary ... 94
14 机械、封装和可订购信息 ... 94

4 修订历史记录

注：之前版本的页码可能与当前版本有所不同。

日期	修订版本	说明
2019 年 10 月	*	初始发行版。

版权 © 2019, Texas Instruments Incorporated

5 Device Comparison Table

DEVICE NAME	$R_{DS(on)}$	DSP Audio Process Flows
TAS5825P	90 mΩ	Hybrid-Pro Algorithm for Audio Class-H Envelope Tracking
TAS5825M	90 mΩ	Flexible DSP Process Flows: Smart Amp, Sound Field Spatializer, 192 kHz Processing
TAS5805M	180 mΩ	ROM Fixed Process Flows

6 Pin Configuration and Functions

RHB Package
32-Pin VQFN

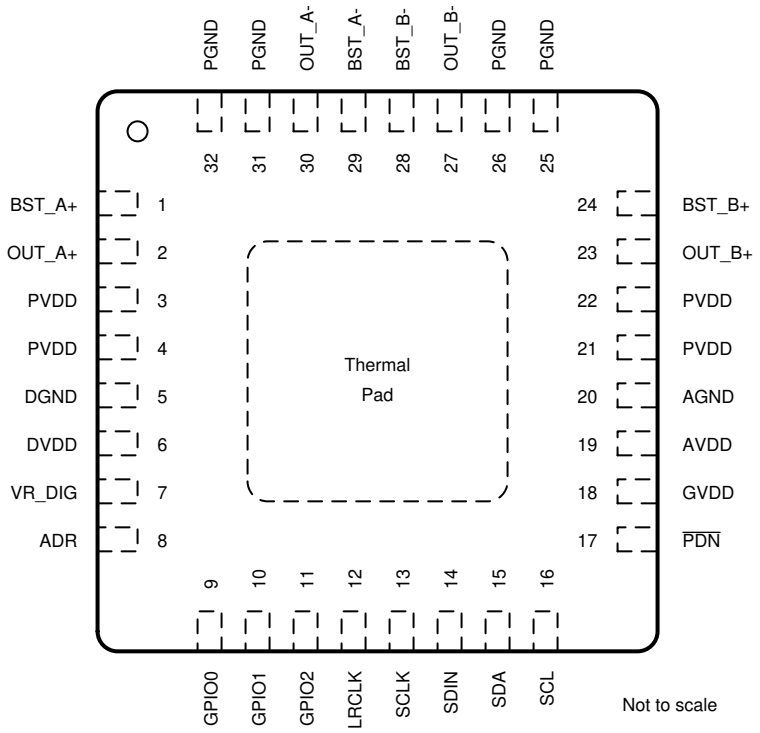

Pin Functions

PIN		TYPE(1)	DESCRIPTION
NAME	NO.		
DGND	5	P	Digital ground
DVDD	6	P	3.3-V or 1.8-V digital power supply
VR_DIG	7	P	Internally regulated 1.5-V digital supply voltage. This pin must not be used to drive external devices
ADR	8	AI	A table of resistor value (Pull down to GND) will decide device I2C address. See 表 5.
GPIO0	9	DI/O	General-purpose input/output, function of this pin can be programmed by register (Register Address 0x60h and 0x61h). Can be configured to be CMOS output or Open drain output (HPFB: Hybrid-Pro Feedback, WARNZ or FAULTZ)
GPIO1	10	DI/O	General-purpose input/output, function of this pin can be programmed by register (Register Address 0x60h and 0x62h). Can be configured to be CMOS output or Open drain output (HPFB: Hybrid-Pro Feedback, WARNZ or FAULTZ)
GPIO2	11	DI/O	General-purpose input/output, function of this pin can be programmed by register (Register Address 0x60h and 0x63h). Can be configured to be CMOS output or Open drain output (HPFB: Hybrid-Pro Feedback, WARNZ or FAULTZ)

(1) AI = Analog input, AO = Analog output, DI = Digital Input, DO = Digital Output, DI/O = Digital Bi-directional (input and output), P = Power, G = Ground (0 V)

Copyright © 2019, Texas Instruments Incorporated

Pin Functions (continued)

PIN		TYPE (1)	DESCRIPTION
NAME	NO.		
LRCLK	12	DI	Word select clock for the digital signal that is active on the serial port's input data line. In I^2S, LJ and RJ, this corresponds to the left channel and right channel boundary. In TDM mode, this corresponds to the frame sync boundary.
SCLK (2)	13	DI	Bit clock for the digital signal that is active on the input data line of the serial data port. Sometimes, this pin also be written as "bit clock (BCLK)"
SDIN	14	DI	Data line to the serial data port
SDA	15	DI/O	I2C serial control data interface input/output
SCL	16	DI	I2C serial control clock input
$\overline{PDN}$	17	DI	Power down, active-low. $\overline{PDN}$ place the amplifier in Shutdown, turn off all internal regulators.
GVDD	18	P	Gate drive internal regulator output. This pin must not be used to drive external devices
AVDD	19	P	Internally regulated 5-V analog supply voltage. This pin must not be used to drive external devices
AGND	20	P	Analog ground
PVDD	3	P	PVDD voltage input
	4	P	
	21	P	
	22	P	
PGND	25	P	Ground reference for power device circuitry. Connect this pin to system ground.
	26	P	
	31	P	
	32	P	
OUT_B+	23	O	Positive pin for differential speaker amplifier output B
BST_B+	24	P	Connection point for the OUT_B+ bootstrap capacitor which is used to create a power supply for the high-side gate drive for OUT_B+
OUT_B-	27	O	Negative pin for differential speaker amplifier output B
BST_B-	28	P	Connection point for the OUT_B- bootstrap capacitor which is used to create a power supply for the high-side gate drive for OUT_B-
BST_A-	29	P	Connection point for the OUT_A- bootstrap capacitor which is used to create a power supply for the high-side gate drive for OUT_A-
OUT_A-	30	O	Negative pin for differential speaker amplifier output A
BST_A+	1	P	Connection point for the OUT_A+ bootstrap capacitor which is used to create a power supply for the high-side gate drive for OUT_A+
OUT_A+	2	O	Positive pin for differential speaker amplifier output A
PowerPAD™		P	Connect to the system Ground

(2) Typically written "bit clock (BCLK)" in some audio codecs.

Copyright © 2019, Texas Instruments Incorporated

7 Specifications

7.1 Absolute Maximum Ratings

Free-air room temperature 25°C (unless otherwise noted) (1)

		MIN	MAX	UNIT
DVDD	Low-voltage digital supply	–0.3	3.9	V
PVDD	PVDD supply	–0.3	30	V
$V_{I(DigIn)}$	DVDD referenced digital inputs (2)	–0.5	V_{DVDD} + 0.5	V
$V_{I(SPK_OUTxx)}$	Voltage at speaker output pins	–0.3	32	V
T_A	Ambient operating temperature,	–25	85	°C
T_{stg}	Storage temperature	–40	125	°C

(1) Stresses beyond those listed under *Absolute Maximum Ratings* may cause permanent damage to the device. Theseare stress ratings only, which do not imply functional operation of the device at these or anyother conditions beyond those indicated under *Recommended OperatingConditions*. Exposure to absolute-maximum-rated conditions for extended periods mayaffect device reliability.
(2) DVDD referenced digital pins include: ADR, GPIO0, GPIO1,GPIO2, LRCLK, SCLK, SDIN,,SCL, SDA, $\overline{PDN}$

7.2 ESD Ratings

			VALUE	UNIT
$V_{(ESD)}$	Electrostatic discharge	Human-body model (HBM), per ANSI/ESDA/JEDEC JS-001 (1)	±2000	V
		Charged-device model (CDM), per JEDEC specification JESD22-C101 or ANSI/ESDA/JEDEC JS-002 (2)	±500	

(1) JEDEC document JEP155 states that 500-V HBM allows safemanufacturing with a standard ESD control process.
(2) JEDEC document JEP157 states that 250-V CDM allows safemanufacturing with a standard ESD control process.

7.3 Recommended Operating Conditions

over operating free-air temperature range (unless otherwise noted)

			MIN	NOM	MAX	UNIT
$V_{(POWER)}$	Power supply inputs	DVDD	1.62		3.63	V
		PVDD	4.5		26.4	
R_{SPK}	Minimum speaker load	BTL Mode	3.2	4		Ω
		PBTL Mode	1.6	2		Ω
L_{OUT}	Minimum inductor value in LC filter under short-circuit condition		1	4.7		µH

7.4 Thermal Information

THERMAL METRIC (1)		TAS5825P VQFN (RHB) 32 PINS			UNIT
		JEDEC STANDARD 2-LAYER PCB	JEDEC STANDARD 4-LAYER PCB	TAS5825PEVM-4 4-LAYER PCB	
$R_{\theta JA}$	Junction-to-ambient thermal resistance	N/A	30.0	24.1	°C/W
$R_{\theta JC(top)}$	Junction-to-case (top) thermal resistance	N/A	19.1	19.1	°C/W
$R_{\theta JB}$	Junction-to-board thermal resistance	N/A	9.9	9.9	°C/W
ψ_{JT}	Junction-to-top characterization parameter	N/A	0.2	0.9	°C/W
ψ_{JB}	Junction-to-board characterization parameter	N/A	10.5	8.8	°C/W
$R_{\theta JC(bot)}$	Junction-to-case (bottom) thermal resistance	N/A	N/A	N/A	°C/W

(1) For more information about traditional and new thermalmetrics, see the *Semiconductor and ICPackage Thermal Metrics* application report.

Copyright © 2019, Texas Instruments Incorporated

7.5 Electrical Characteristics

Free-air room temperature 25°C (unless otherwise noted)

PARAMETER		TEST CONDITIONS	MIN	TYP	MAX	UNIT
Digital I/O						
|IIH|	Input logic high current level for DVDD referenced digital input pins	$V_{IN(DigIn)} = V_{DVDD}$			10	µA
|IIL|	Input logic low current level for DVDD referenced digital input pins	$V_{IN(DigIn)}$ = 0 V			–10	µA
$V_{IH(Digin)}$	Input logic high threshold for DVDD referenced digital inputs		70%			V_{DVDD}
$V_{IL(Digin)}$	Input logic low threshold for DVDD referenced digital inputs				30%	V_{DVDD}
$V_{OH(Digin)}$	Output logic high voltage level	I_{OH} = 4 mA	80%			V_{DVDD}
$V_{OL(Digin)}$	Output logic low voltage level	I_{OH} = –4 mA			20%	V_{DVDD}
I^2C Control Port						
$C_{L(I2C)}$	Allowable load capacitance for each I^2C Line				400	pF
$f_{SCL(fast)}$	Support SCL frequency	No wait states, fast mode			400	kHz
$f_{SCL(slow)}$	Support SCL frequency	No wait states, slow mode			100	kHz
Serial Audio Port						
t_{DLY}	Required LRCK/FS to SCLK rising edge delay		5			ns
D_{SCLK}	Allowable SCLK duty cycle		40%		60%	
f_S	Supported input sample rates		32		192	kHz
f_{SCLK}	Supported SCLK frequencies		32		64	f_S
f_{SCLK}	SCLK frequency				24.576	MHz
Speaker Amplifier (All Output Configurations)						
t_{off}	Turn-off Time	Excluding volume ramp			10	ms
I_{CC}	Quiescent supply current of DVDD	$\overline{PDN}$ = 2 V, DVDD = 3.3 V, Play mode, General Audio Process flow with full DSP running		25.5		mA
I_{CC}	Quiescent supply current of DVDD	$\overline{PDN}$ = 2 V, DVDD = 3.3 V,Sleep mode		0.87		mA
I_{CC}	Quiescent supply current of DVDD	$\overline{PDN}$ = 2 V, DVDD = 3.3 V,Deep Sleep mode		0.82		mA
I_{CC}	Quiescent supply current of DVDD	$\overline{PDN}$ = 0.8 V, DVDD = 3.3 V,Shutdown mode		7.4		uA
I_{CC}	Quiescent supply current of PVDD	$\overline{PDN}$ = 2 V, PVDD = 13.5 V, No Load, LC filter = 10 µH + 0.68 µF, F_{SW} = 384 kHz, Hybrid Modulation, Play Mode		29.5		mA
I_{CC}	Quiescent supply current of PVDD	$\overline{PDN}$ = 2 V, PVDD = 13.5 V, No Load, LC filter = 22 µH + 0.68 µF, F_{SW} = 384 kHz, Hybrid Modulation, Play Mode		20.5		mA
I_{CC}	Quiescent supply current of PVDD	$\overline{PDN}$ = 2 V, PVDD = 13.5 V, No Load, LC filter = 10 µH + 0.68 µF, F_{SW} = 384 kHz, Output Hiz Mode		10.7		mA
I_{CC}	Quiescent supply current of PVDD	$\overline{PDN}$ = 2 V, PVDD = 13.5 V, No Load, LC filter = 10 µH + 0.68 µF, Fsw = 384 kHz, Sleep Mode		7.26		mA
I_{CC}	Quiescent supply current of PVDD	$\overline{PDN}$ = 2 V, PVDD = 13.5 V, No Load, LC filter = 10 µH + 0.68 µF,F_{SW} = 384 khz, Deep Sleep Mode		12.01		uA
I_{CC}	Quiescent supply current of PVDD	$\overline{PDN}$ = 0.8 V, PVDD = 13.5 V, No Load, LC filter = 10 µH + 0.68 µF, F_{SW} = 384 khz, Shutdown Mode		7.8		uA
$A_{V(SPK_AMP)}$	Programmable Gain	Value represents the "peak voltage" disregarding clipping due to lower PVDD). Measured at 0 dB input (1FS)	4.87		29.5	V
$\Delta A_{V(SPK_AMP)}$	Amplifier gain error	Gain = 29.5 V_P		0.5		dB

Copyright © 2019, Texas Instruments Incorporated

Electrical Characteristics (continued)

Free-air room temperature 25°C (unless otherwise noted)

PARAMETER		TEST CONDITIONS	MIN	TYP	MAX	UNIT
f_{SPK_AMP}	Switching frequency of the speaker amplifier			384		kHz
				768		kHz
$R_{DS(on)}$	Drain-to-source on resistance of the individual output MOSFETs	FET + Metallization.		90		mΩ
OCE_{THRES}	Over-Current Error Threshold	Any short to supply, ground, or other channels		7.5		A
	Over-Current cycle-by-cycle limit			6.5		A
$OVE_{THRES(PVDD}$	PVDD over voltage error threshold			28		V
$UVE_{THRES(PVDD}$	PVDD under voltage error threshold			4.2		V
OTE_{THRES}	Over temperature error threshold			160		°C
$OTE_{Hystersis}$	Over temperature error hysteresis			10		°C
OTW_{THRES}	Over temperature warning level 1	Read by register 0x73 bit0		112		°C
OTW_{THRES}	Over temperature warning level 2	Read by register 0x73 bit1		122		°C
OTW_{THRES}	Over temperature warning level 3	Read by register 0x73 bit2		134		°C
OTW_{THRES}	Over temperature warning level 4	Read by register 0x73 bit3		146		°C
Speaker Amplifier (Stereo BTL)						
$\|V_{OS}\|$	Amplifier offset voltage	Measured differentially with zero input data, programmable gain configured with 29.5 V_P gain, V_{PVDD} = 16 V	–7.5		7.5	mV
$P_{O(SPK)}$	Output Power (Per Channel)	V_{PVDD} = 14.4 V, SPK_GAIN = 29.5 V_P, R_{SPK} = 6 Ω, f = 1 KHz THD+N = 10%		17.8		W
		V_{PVDD} = 14.4 V, SPK_GAIN = 29.5 V_P, R_{SPK} = 6 Ω, f = 1 KHz THD+N = 1%		14.5		W
		V_{PVDD} = 24 V, SPK_GAIN = 29.5 V_P, R_{SPK} = 8 Ω, f = 1 KHz THD+N = 10% (Instantaneous Output Power)		38		W
		V_{PVDD} = 24 V, SPK_GAIN = 29.5 V_P, R_{SPK} = 8 Ω, f = 1 KHz THD+N = 1% (Continuous Output Power)		30		W
$THD+N_{SPK}$	Total harmonic distortion and noise (P_O = 1 W, f = 1 KHz, R_{SPK} = 6 Ω)	V_{PVDD} = 12 V, SPK_GAIN = 20.9 V_P LC-filter		0.03%		
		V_{PVDD} = 24 V, SPK_GAIN = 29.5 V_P, LC-filter		0.03%		
$I_{CN(SPK)}$	Idle channel noise(A-weighted, AES17)	V_{PVDD} = 12 V, LC-filter, Load = 6 Ω, Hybrid Modulation		32		µVrms
$I_{CN(SPK)}$		V_{PVDD} = 12 V, LC-filter, Load = 6 Ω, BD Modulation		40		
$I_{CN(SPK)}$		V_{PVDD} = 24 V, LC-filter ,Load = 6 Ω, Hybrid Modualtion		35		
$I_{CN(SPK)}$		V_{PVDD} = 24 V, LC-filter ,Load = 6 Ω, BD Modualtion		45		
DR	Dynamic range	A-Weighted, -60 dBFS method. P_{VDD} = 24 V, SPK_GAIN = 29.5 Vp		111		dB
SNR	Signal-to-noise ratio	A-Weighted, referenced to 1% THD+N Output Level, PVDD = 24 V		111		dB
		A-Weighted, referenced to 1% THD+N Output Level, PVDD = 14.4 V		108		dB
K_{SVR}	Power supply rejection ratio	Injected Noise = 1 KHz, 1 V_{rms}, P_{VDD} = 14.4 V, input audio signal = digital zero		72		dB
$X\text{-}talk_{SPK}$	Cross-talk (worst case between left-to-right and right-to-left coupling)	f = 1 KHz		100		dB

Copyright © 2019, Texas Instruments Incorporated

Electrical Characteristics (continued)

Free-air room temperature 25°C (unless otherwise noted)

PARAMETER		TEST CONDITIONS	MIN	TYP	MAX	UNIT
Speaker Amplifier (Mono PBTL)						
$P_{O(SPK)}$	Output Power	V_{PVDD} = 19 V, SPK_GAIN = 29.5 V_P, R_{SPK} = 3 Ω, f = 1KHz, THD+N = 1%		50		W
		V_{PVDD} = 19 V, SPK_GAIN = 29.5 V_P, R_{SPK} = 3 Ω, f = 1KHz, THD+N = 10%		60		W
		V_{PVDD} = 22 V, SPK_GAIN = 29.5 V_P, R_{SPK} = 4 Ω, f = 1KHz, THD+N = 1%		53		W
		V_{PVDD} = 22 V, SPK_GAIN = 29.5 V_P, R_{SPK} = 4 Ω, f = 1KHz, THD+N = 10%		65		W
$THD+N_{SPK}$	Total harmonic distortion and noise (P_O = 1 W, f = 1 KHz	V_{PVDD} = 19 V, SPK_GAIN = 20.9 Vp, LC-filter R_{SPK} = 3 Ω)		0.03%		
		V_{PVDD} = 24 V, SPK_GAIN = 29.5 V_P, LC-filter R_{SPK} = 4 Ω)		0.03%		
DR	Dynamic range	A-Weighted, -60 dBFS method, PVDD=19V		109		dB
SNR	Signal-to-noise ratio	A-Weighted, referenced to 1% THD+N Output Level, PVDD = 19 V		109		dB
		A-Weighted, referenced to 1% THD+N Output Level, PVDD = 24 V		111		dB

Copyright © 2019, Texas Instruments Incorporated

7.6 Timing Requirements

		MIN	NOM	MAX	UNIT
Serial Audio Port Timing – Slave Mode					
f_{SCLK}	SCLK frequency	1.024			MHz
t_{SCLK}	SCLK period	40			ns
t_{SCLKL}	SCLK pulse width, low	16			ns
t_{SCLKH}	SCLK pulse width, high	16			ns
t_{SL}	SCLK rising to LRCK/FS edge	8			ns
t_{LS}	LRCK/FS Edge to SCLK rising edge	8			ns
t_{SU}	Data setup time, before SCLK rising edge	8			ns
t_{DH}	Data hold time, after SCLK rising edge	8			ns
t_{DFS}	Data delay time from SCLK falling edge			15	ns
I^2C Bus Timing – Standard					ns
f_{SCL}	SCL clock frequency			100	kHz
t_{BUF}	Bus free time between a STOP and START condition	4.7			µs
t_{LOW}	Low period of the SCL clock	4.7			µs
t_{HI}	High period of the SCL clock	4			µs
t_{RS-SU}	Setup time for (repeated) START condition	4.7			µs
t_{S-HD}	Hold time for (repeated) START condition	4			µs
t_{D-SU}	Data setup time	250			ns
t_{D-HD}	Data hold time	0		900	ns
t_{SCL-R}	Rise time of SCL signal	$20 + 0.1C_B$		1000	ns
t_{SCL-R1}	Rise time of SCL signal after a repeated START condition and after an acknowledge bit	$20 + 0.1C_B$		1000	ns
t_{SCL-F}	Fall time of SCL signal	$20 + 0.1C_B$		1000	ns
t_{SDA-R}	Rise time of SDA signal	$20 + 0.1C_B$		1000	ns
t_{SDA-F}	Fall time of SDA signal	$20 + 0.1C_B$		1000	ns
t_{P-SU}	Setup time for STOP condition	4			µs
I^2C Bus Timing – Fast					
f_{SCL}	SCL clock frequency			400	kHz
t_{BUF}	Bus free time between a STOP and START condition	1.3			µs
t_{LOW}	Low period of the SCL clock	1.3			µs
t_{HI}	High period of the SCL clock	600			ns
t_{RS-SU}	Setup time for (repeated)START condition	600			ns
t_{RS-HD}	Hold time for (repeated)START condition	600			ns
t_{D-SU}	Data setup time	100			ns
t_{D-HD}	Data hold time	0		900	ns
t_{SCL-R}	Rise time of SCL signal	$20 + 0.1C_B$		300	ns
t_{SCL-R1}	Rise time of SCL signal after a repeated START condition and after an acknowledge bit	$20 + 0.1C_B$		300	ns
t_{SCL-F}	Fall time of SCL signal	$20 + 0.1C_B$		300	ns
t_{SDA-R}	Rise time of SDA signal	$20 + 0.1C_B$		300	ns
t_{SDA-F}	Fall time of SDA signal	$20 + 0.1C_B$		300	ns
t_{P-SU}	Setup time for STOP condition	600			ns
t_{SP}	Pulse width of spike suppressed			50	ns

7.7 Typical Characteristics

7.7.1 Bridge Tied Load (BTL) Configuration Curves with Hybrid Modulation

Free-air room temperature 25°C (unless otherwise noted) Measurements were made using TAS5825PEVM board and Audio Precision System 2722 with Analog Analyzer filter set to 20-kHz brickwall filter. All measurements taken with audio frequency set to 1 kHz and device PWM frequency set to 384 kHz, the LC filter used was 10μH / 0.68 μF, unless otherwise noted.

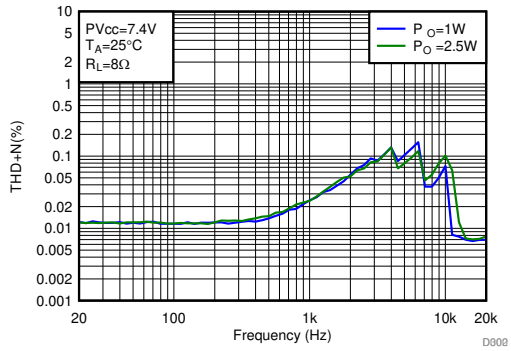

Hybrid Modulation P_O = 1W, 2.5W
F_{SW} = 384 kHz Load = 8Ω BTL Mode

图 1. THD+N vs Frequency-BTL

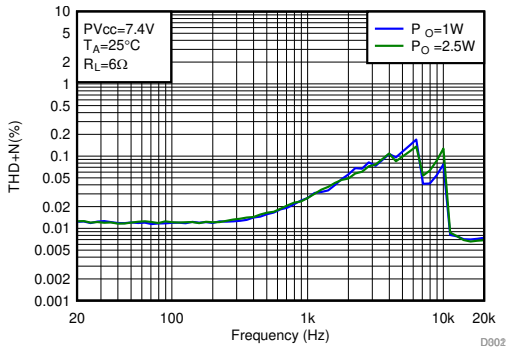

Hybrid Modulation P_O = 1W, 2.5W
F_{SW} = 384 kHz Load = Ω BTL Mode

图 2. THD+N vs Frequency-BTL

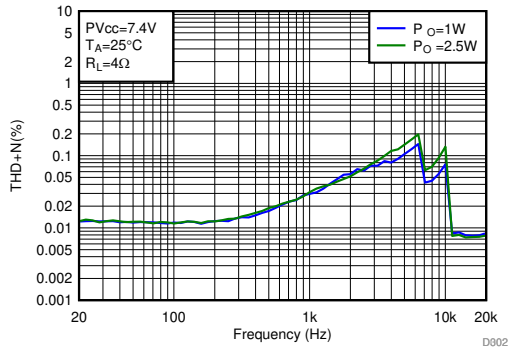

Hybrid Modulation P_O = 1W, 2.5W
F_{SW} = 384 kHz Load = 4Ω BTL Mode

图 3. THD+N vs Frequency-BTL

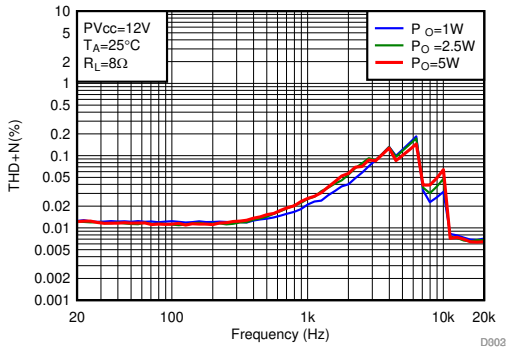

Hybrid Modulation P_O = 1W,2.5W,5W
F_{SW} = 384 kHz Load = 8Ω BTL Mode

图 4. THD+N vs Frequency-BTL

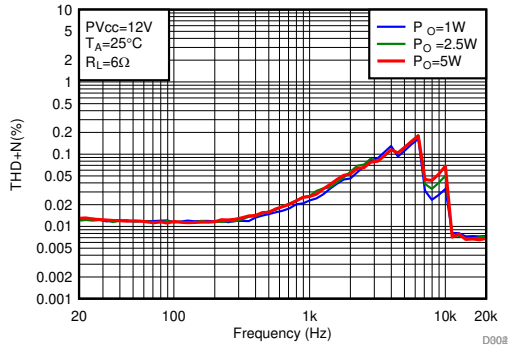

Hybrid Modulation P_O = 1 W,2.5W,5W
F_{SW} = 384 kHz Load = 6Ω BTL Mode

图 5. THD+N vs Frequency-BTL

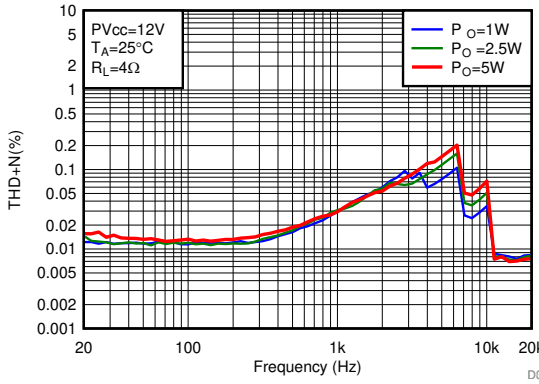

Hybrid Modulation P_O = 1W
F_{SW} = 384 kHz Load = 4Ω BTL Mode

图 6. THD+N vs Frequency-BTL

版权 © 2019, Texas Instruments Incorporated

Bridge Tied Load (BTL) Configuration Curves with Hybrid Modulation (接下页)

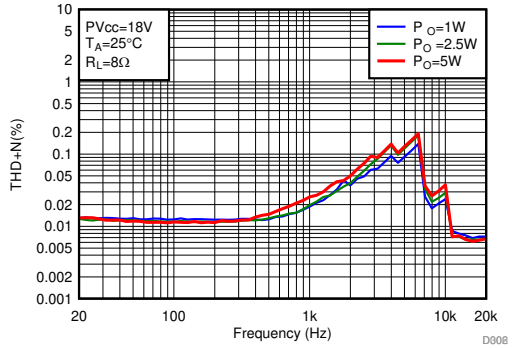

Hybrid Modulation P_O = 1W,2.5W,5W
F_{SW} = 384 kHz Load = 8Ω BTL Mode

图 7. THD+N vs Frequency-BTL

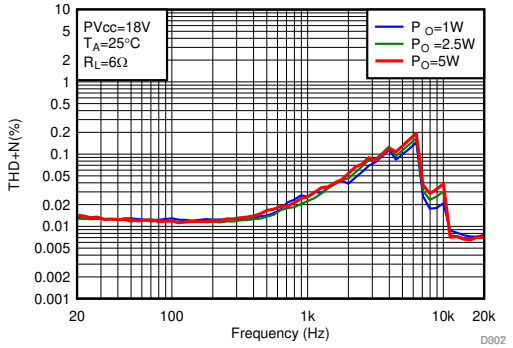

Hybrid Modulation P_O = 1W,2.5W,5W
F_{SW} = 384 kHz Load = 6Ω BTL Mode

图 8. THD+N vs Frequency-BTL

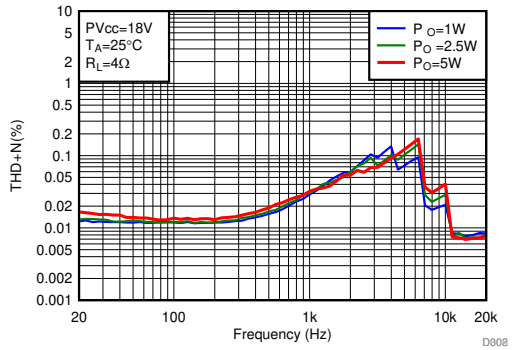

Hybrid Modulation P_O = 1W,2.5W,5W
F_{SW} = 384 kHz Load = 4Ω BTL Mode

图 9. THD+N vs Frequency-BTL

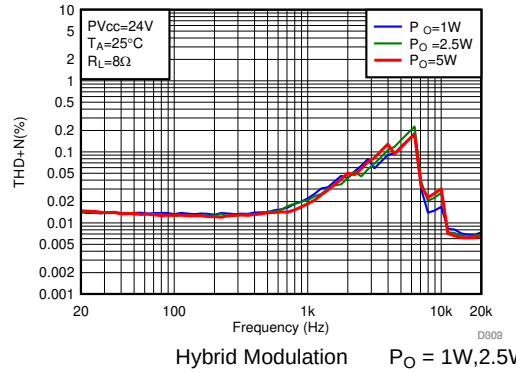

Hybrid Modulation P_O = 1W,2.5W,5W
F_{SW} = 384 kHz Load = 8Ω BTL Mode

图 10. THD+N vs Frequency-BTL

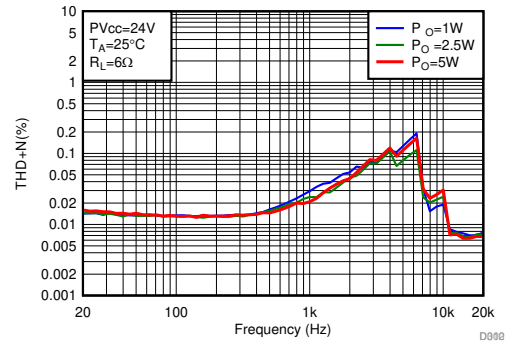

Hybrid Modulation P_O = 1W,2.5W,5W
F_{SW} = 384 kHz Load = 6Ω BTL Mode

图 11. THD+N vs Frequency-BTL

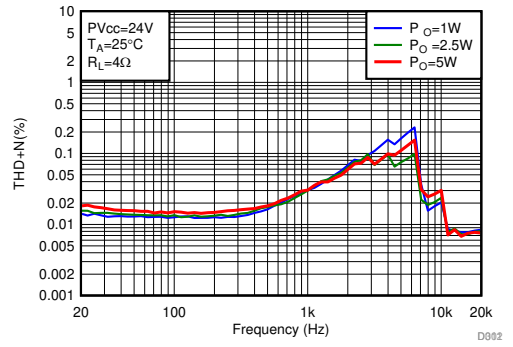

Hybrid Modulation P_O = 1W,2.5W,5W
F_{SW} = 384 kHz Load = 4Ω BTL Mode

图 12. THD+N vs Frequency-BTL

Bridge Tied Load (BTL) Configuration Curves with Hybrid Modulation (接下页)

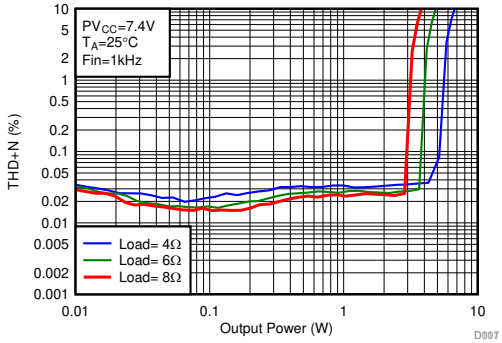

Hybrid Modulation F_{in} = 1 kHz
F_{SW} = 384 kHz Load = 4Ω /6Ω /8Ω BTL Mode

图 13. THD+N vs Output Power-BTL

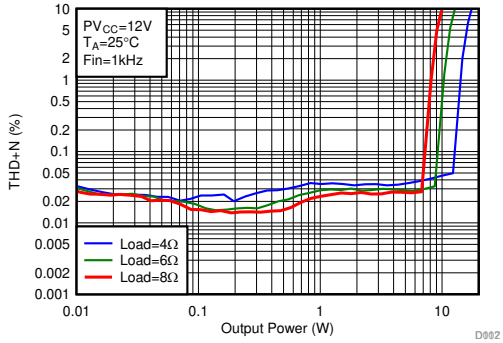

Hybrid Modulation F_{in} = 1 kHz
F_{SW} = 384 kHz Load = 4Ω /6Ω /8Ω BTL Mode

图 14. THD+N vs Output Power-BTL

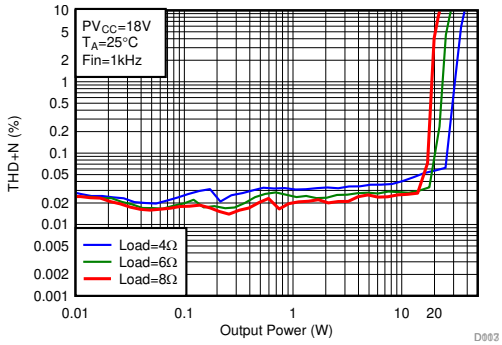

One channel run Hybrid Modulation F_{in} = 1 kHz
F_{SW} = 384 kHz Load = 4Ω /6Ω /8Ω BTL Mode

图 15. THD+N vs Output Power-BTL

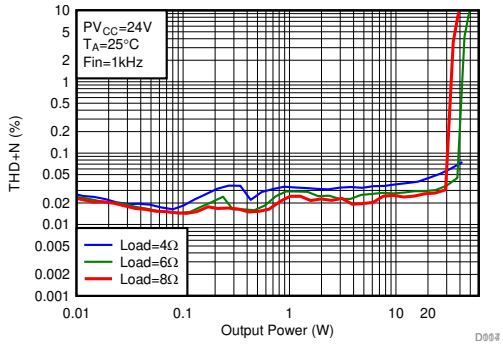

One Channel run Hybrid Modulation F_{in} = 1 kHz
F_{SW} = 384 kHz Load = 4Ω /6Ω /8Ω BTL Mode

图 16. THD+N vs Output Power-BTL

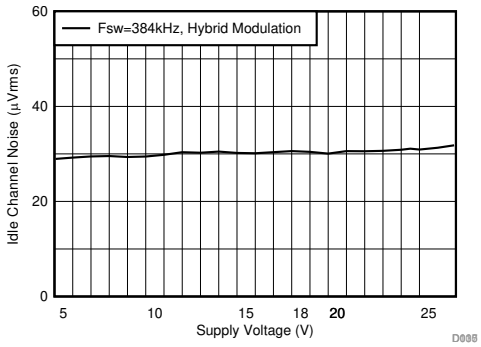

Hybrid Modulation
F_{SW} = 384 kHz Load = 6Ω BTL Mode

图 17. Idle Channel Noise vs Supply Voltage

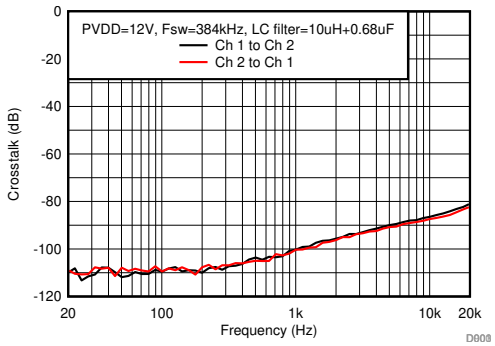

PVDD=12V Hybrid Modulation
F_{SW} = 384 kHz Load = 6Ω BTL Mode

图 18. Crosstalk

版权 © 2019, Texas Instruments Incorporated

Bridge Tied Load (BTL) Configuration Curves with Hybrid Modulation (接下页)

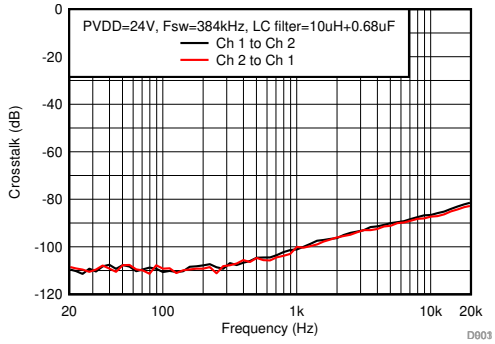

PVDD=24V Hybrid Modulation
F_{SW} = 384 kHz Load = 6Ω BTL Mode

图 19. Crosstalk

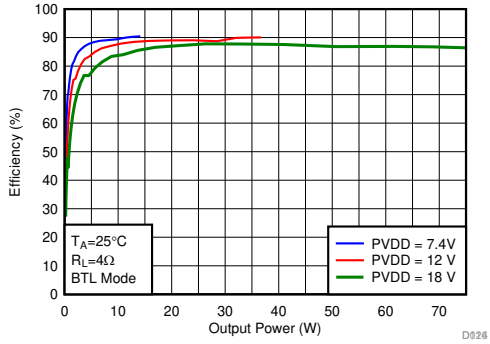

Hybrid Modulation
F_{SW} = 384 kHz Load = 4Ω BTL Mode

图 20. Efficiency vs Output Power

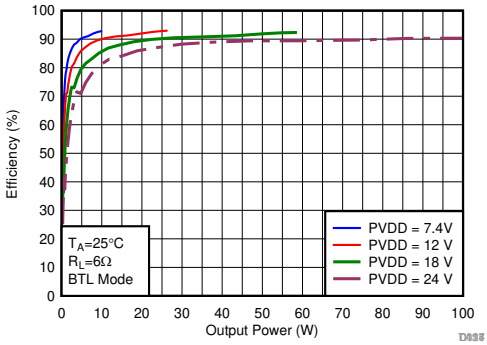

Hybrid Modulation
F_{SW} = 384 kHz Load = 6Ω BTL Mode

图 21. Efficiency vs Output Power

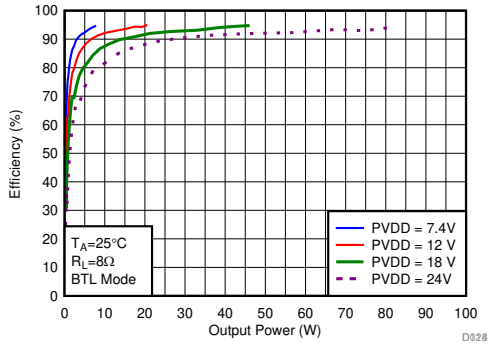

Hybrid Modulation
F_{SW} = 384 kHz Load = 8Ω BTL Mode

图 22. Efficiency vs Output Power

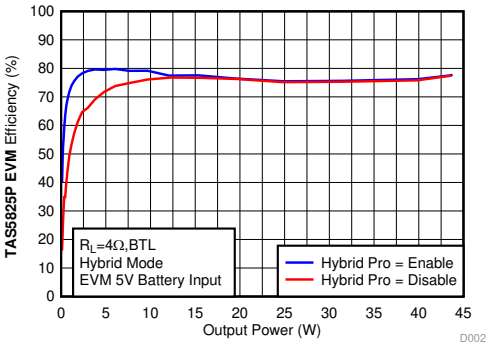

Hybrid Modulation
F_{SW} = 384 kHz 5V Battery Input Default PPC3 Setting
Load=4Ω, BTL 5V~16V Boost (-5.5dB AGAIN)

图 23. EVM Efficiency Comparison ON/OFF Hybrid-Pro

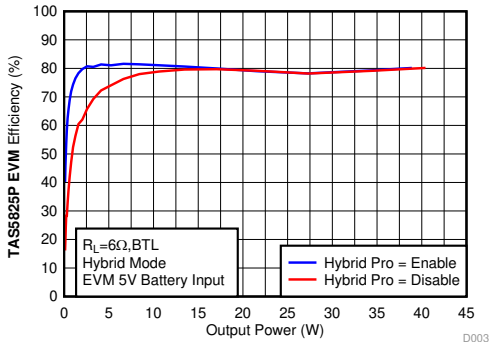

Hybrid Modulation
F_{SW} = 384 kHz 5V Battery Input Default PPC3 Setting
Load=6Ω, BTL 5V~16V Boost (-5.5dB AGAIN)

图 24. EVM Efficiency Comparison ON/OFF Hybrid-Pro

Bridge Tied Load (BTL) Configuration Curves with Hybrid Modulation (接下页)

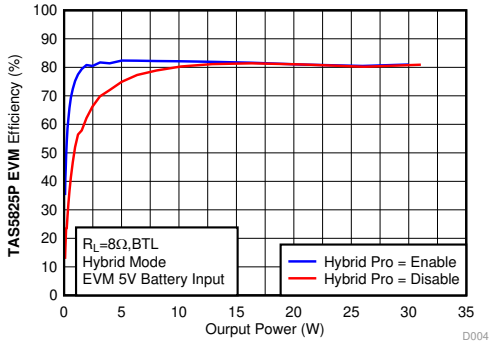

Hybrid Modulation

F_{SW} = 384 kHz Load=8Ω, BTL　　5V Battery Input 5V~16V Boost　　Default PPC3 Setting (-5.5dB AGAIN)

图 25. EVM Efficiency Comparison ON/OFF Hybrid-Pro

版权 © 2019, Texas Instruments Incorporated

7.7.2 Parallel Bridge Tied Load (PBTL) Configuration With Hybrid Modulation

Free-air room temperature 25°C (unless otherwise noted) Measurements were made using TAS5825PEVM board and Audio Precision System 2722 with Analog Analyzer filter set to 20-kHz brickwall filter. All measurements taken with audio frequency set to 1 kHz and device PWM frequency set to 384 kHz, the LC filter used was 10 μH / 0.68 μF (Pre-Filter PBTL, the merging of the two output channels in this device can be done before the inductor portion of the output filter, see connect method in MONO (PBTL) Systems) , unless otherwise noted.

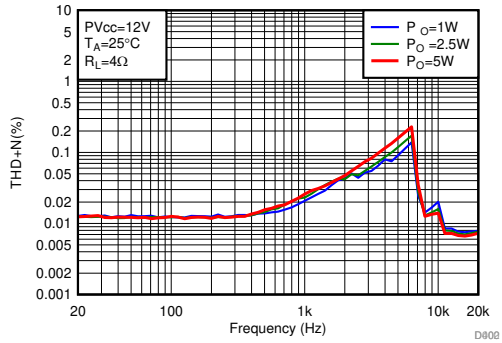

Hybrid Modulation P_O = 1W,2.5W,5W
F_{SW} = 384 kHz Load = 4Ω PBTL Mode

图 26. THD+N vs Frequency-PBTL

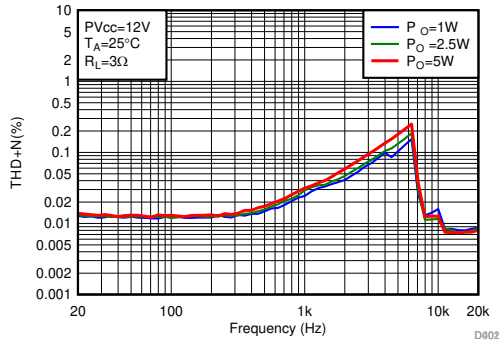

Hybrid Modulation P_O = 1W,2.5W,5W
F_{SW} = 384 kHz Load = 3Ω PBTL Mode

图 27. THD+N vs Frequency-PBTL

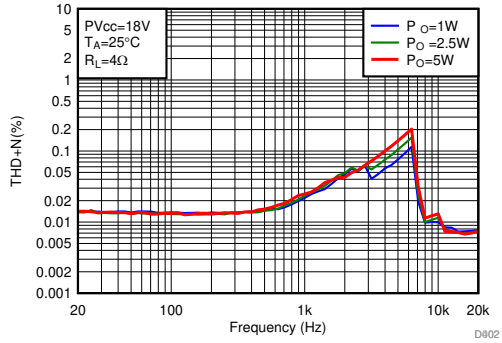

Hybrid Modulation P_O = 1W,2.5W,5W
F_{SW} = 384 kHz Load = 4Ω PBTL Mode

图 28. THD+N vs Frequency-PBTL

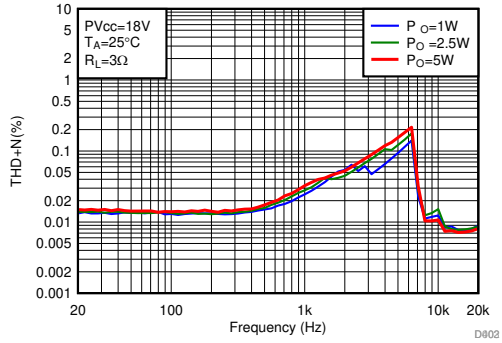

Hybrid Modulation P_O = 1W,2.5W,5W
F_{SW} = 384 kHz Load = 3Ω PBTL Mode

图 29. THD+N vs Frequency-PBTL

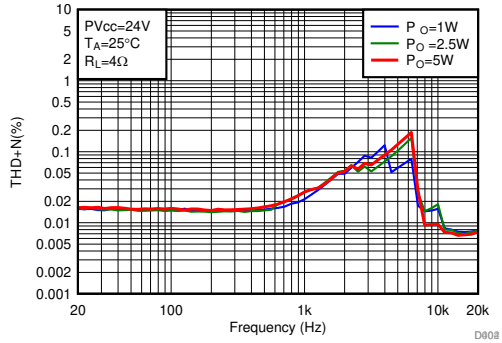

Hybrid Modulation P_O = 1W,2.5W,5W
F_{SW} = 384 kHz Load = 4Ω PBTL Mode

图 30. THD+N vs Frequency-PBTL

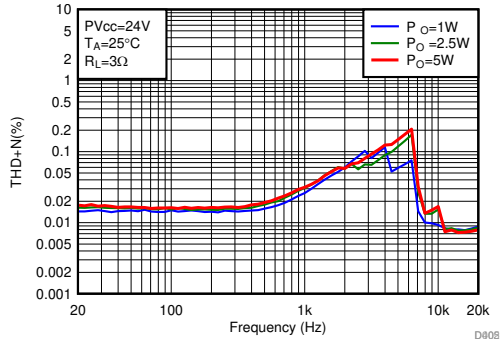

Hybrid Modulation P_O = 1W,2.5W,5W
F_{SW} = 384 kHz Load = 3Ω PBTL Mode

图 31. THD+N vs Frequency-PBTL

Parallel Bridge Tied Load (PBTL) Configuration With Hybrid Modulation (接下页)

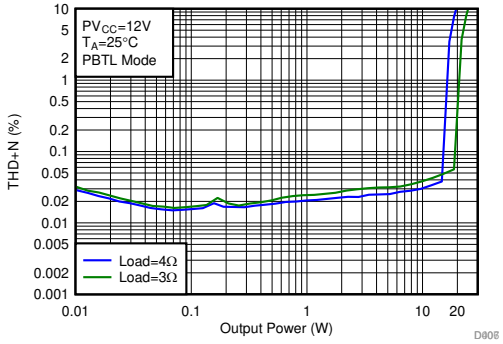

Hybrid Modulation

F_{SW} = 384 kHz Load = 4Ω, 3Ω PBTL Mode

图 32. THD+N vs Output Power-PBTL

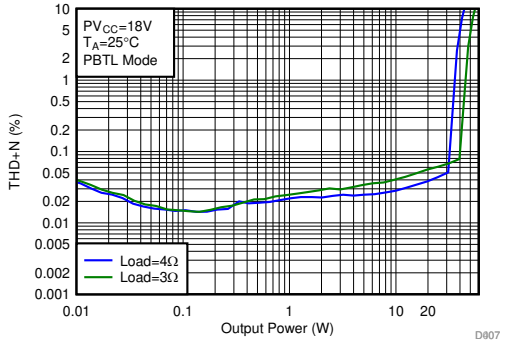

Hybrid Modulation

F_{SW} = 384 kHz Load = 4Ω, 3Ω PBTL Mode

图 33. THD+N vs Output Power-PBTL

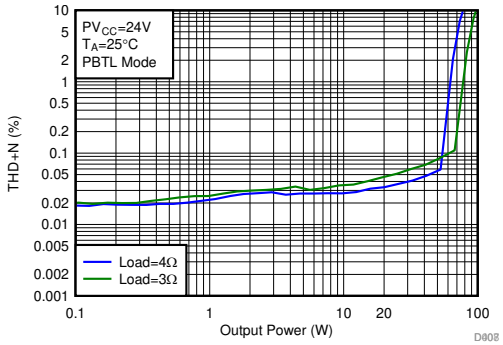

Hybrid Modulation

F_{SW} = 384 kHz Load = 4Ω, 3Ω PBTL Mode

图 34. THD+N vs Output Power-PBTL

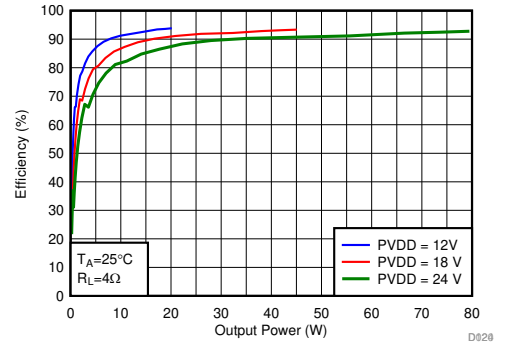

Hybrid Modulation

F_{SW} = 384 kHz Load = 4Ω PBTL Mode

图 35. Efficiency vs Output Power

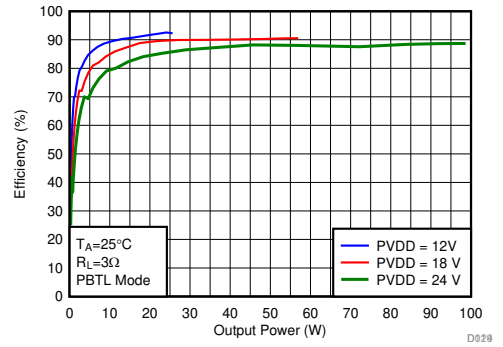

Hybrid Modulation

F_{SW} = 384 kHz Load = 3Ω PBTL Mode

图 36. Efficiency vs Output Power

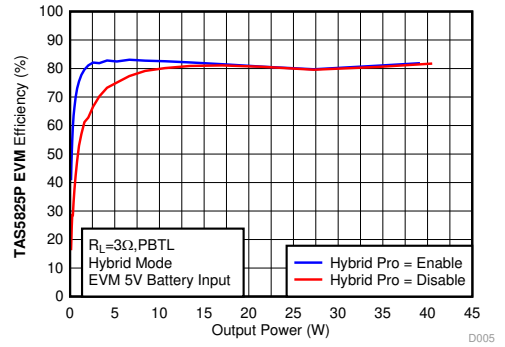

Hybrid Modulation

F_{SW} = 384 kHz Load=3Ω, PBTL | 5V Battery Input 5V~16V Boost | Default PPC3 Setting (-5.5dB AGAIN)

图 37. EVM Efficiency Comparison ON/OFF Hybrid-Pro

版权 © 2019, Texas Instruments Incorporated

Parallel Bridge Tied Load (PBTL) Configuration With Hybrid Modulation (接下页)

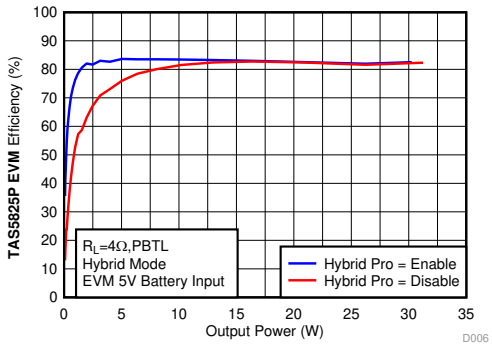

Hybrid Modulation

F_{SW} = 384 kHz
Load=4Ω, PBTL

5V Battery Input
5V~16V Boost

Default PPC3 Setting
(-5.5dB AGAIN)

图 38. EVM Efficiency Comparison ON/OFF Hybrid-Pro

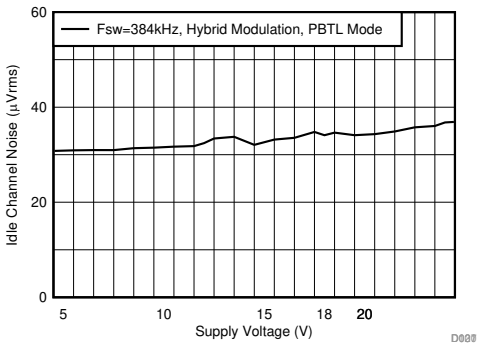

Hybrid Modulation

F_{SW} = 384 kHz

Load = 6Ω

PBTL Mode

图 39. Idle Channel Noise vs Supply Voltage

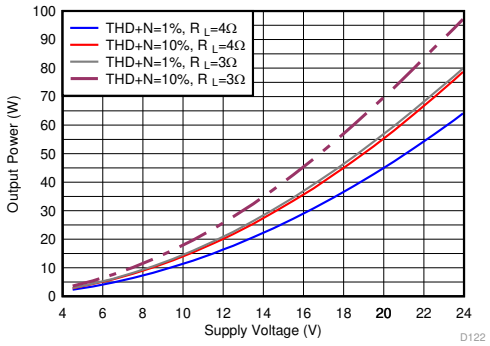

Hybrid Modulation

F_{SW} = 384 kHz

Load = 3Ω, 4Ω

PBTL Mode

图 40. Output Power vs Supply Voltage

7.7.3 Bridge Tied Load (BTL) Configuration Curves with BD Modulation

Free-air room temperature 25°C (unless otherwise noted) Measurements were made using TAS5825PEVM board and Audio Precision System 2722 with Analog Analyzer filter set to 20-kHz brickwall filter. All measurements taken with audio frequency set to 1 kHz and device PWM frequency set to 768 kHz, the LC filter used was 4.7µH / 0.68 µF, unless otherwise noted.

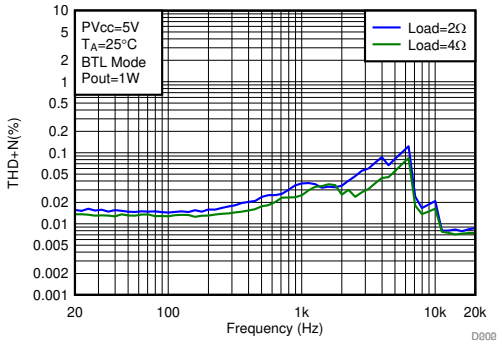

BD Modulation P_O = 1W
F_{SW} = 768 kHz Load = 2Ω, 4Ω BTL Mode

图 41. THD+N vs Frequency-BTL

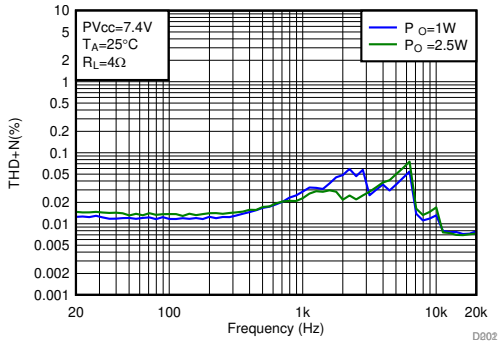

BD Modulation P_O = 1W, 2.5W
F_{SW} = 768 kHz Load = 4Ω BTL Mode

图 42. THD+N vs Frequency-BTL

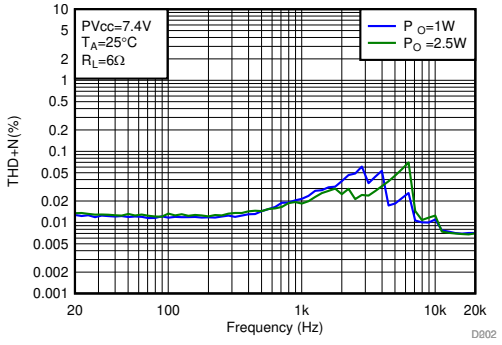

BD Modulation P_O = 1W, 2.5W
F_{SW} = 768 kHz Load = 6Ω BTL Mode

图 43. THD+N vs Frequency-BTL

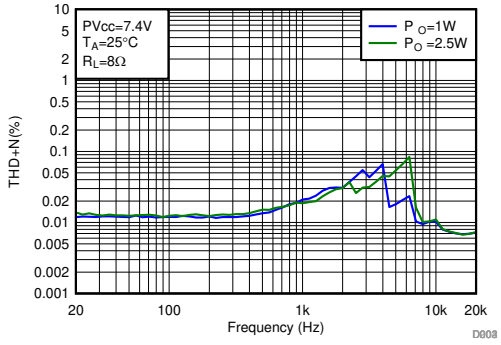

BD Modulation P_O = 1W, 2.5W
F_{SW} = 768 kHz Load = 8Ω BTL Mode

图 44. THD+N vs Frequency-BTL

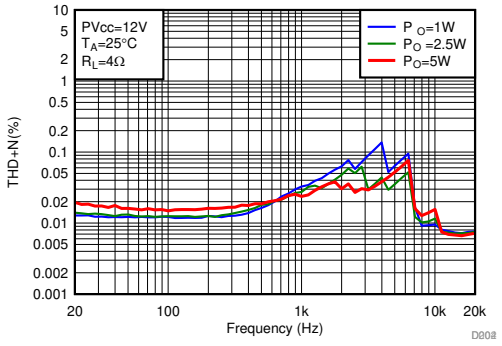

BD Modulation P_O = 1W,2.5W,5W
F_{SW} = 768 kHz Load = 4Ω BTL Mode

图 45. THD+N vs Frequency-BTL

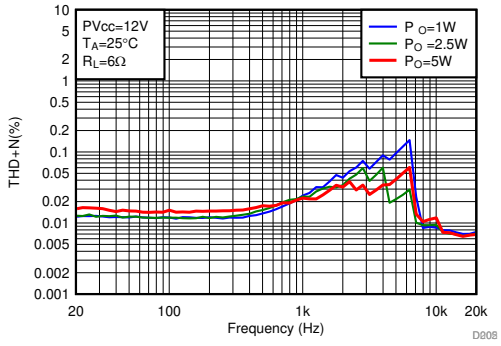

BD Modulation P_O = 1W,2.5W,5W
F_{SW} = 768 kHz Load = 6Ω BTL Mode

图 46. THD+N vs Frequency-BTL

版权 © 2019, Texas Instruments Incorporated

Bridge Tied Load (BTL) Configuration Curves with BD Modulation (接下页)

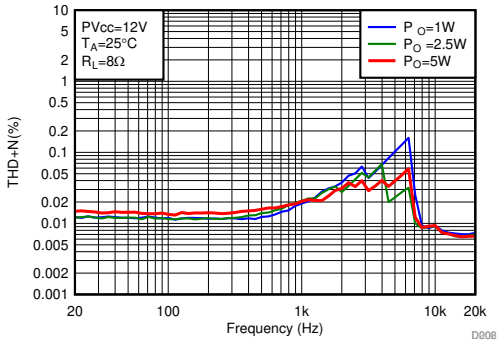

F_{SW} = 768 kHz BD Modulation Load = 8Ω P_O = 1W,2.5W,5W BTL Mode

图 47. THD+N vs Frequency-BTL

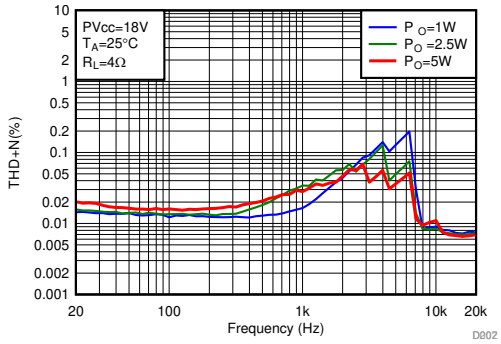

F_{SW} = 768 kHz BD Modulation Load = 4Ω P_O = 1W,2.5W,5W BTL Mode

图 48. THD+N vs Frequency-BTL

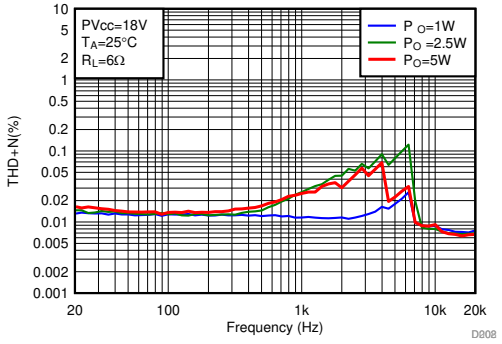

F_{SW} = 768 kHz BD Modulation Load = 6Ω P_O = 1W,2.5W 5W BTL Mode

图 49. THD+N vs Frequency-BTL

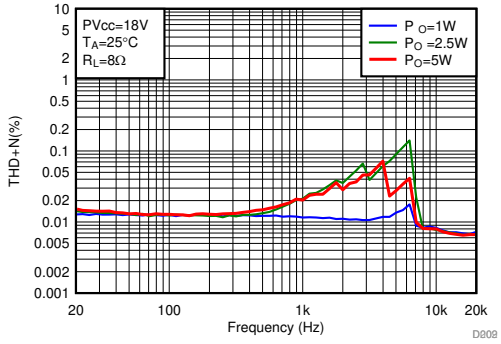

F_{SW} = 768 kHz BD Modulation Load = 8Ω P_O = 1W,2.5W,5W BTL Mode

图 50. THD+N vs Frequency-BTL

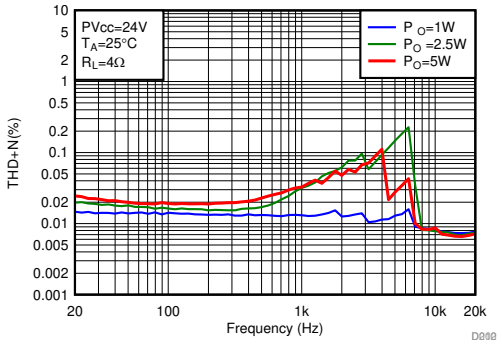

F_{SW} = 768 kHz BD Modulation Load = 4Ω P_O = 1W,2.5W,5W BTL Mode

图 51. THD+N vs Frequency-BTL

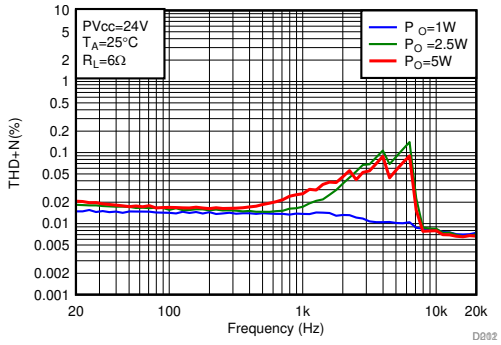

F_{SW} = 768 kHz BD Modulation Load = 6Ω P_O = 1W,2.5W,5W BTL Mode

图 52. THD+N vs Frequency-BTL

Bridge Tied Load (BTL) Configuration Curves with BD Modulation (接下页)

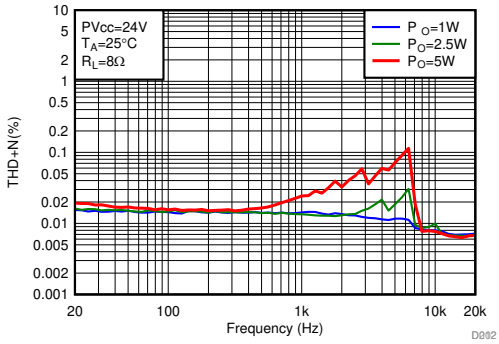

BD Modulation P_O = 1W,2.5W,5W
F_{SW} = 768 kHz Load = 8Ω BTL Mode

图 53. THD+N vs Frequency-BTL

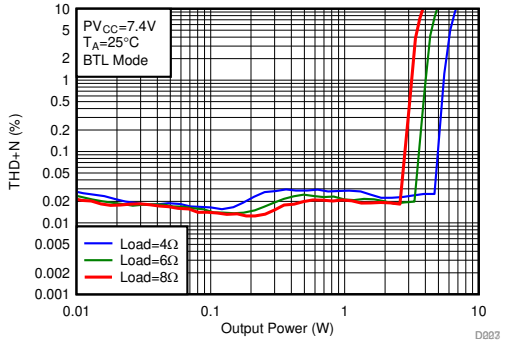

BD Modulation
F_{SW} = 768 kHz Load = 4Ω, 6Ω, 8Ω BTL Mode

图 54. THD+N vs Output Power-BTL

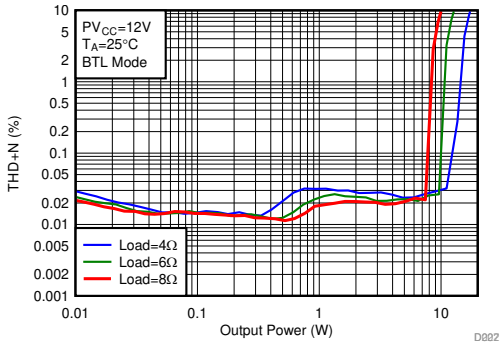

BD Modulation
F_{SW} = 768 kHz Load = 4Ω, 6Ω, 8Ω BTL Mode

图 55. THD+N vs Output Power-BTL

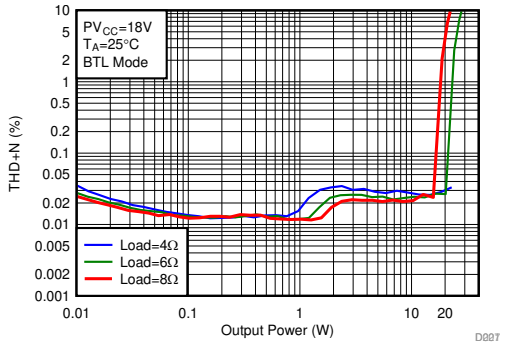

BD Modulation Two Channel Run
F_{SW} = 768 kHz Load = 4Ω, 6Ω, 8Ω BTL Mode

图 56. THD+N vs Output Power-BTL

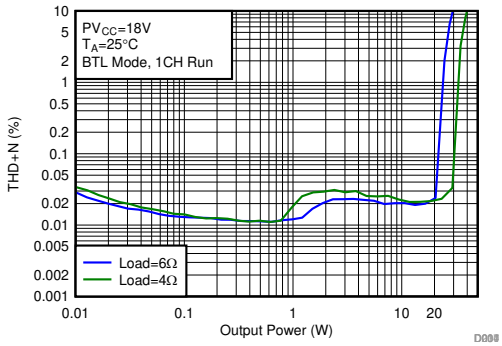

BD Modulation 1 Channel Run
F_{SW} = 768 kHz Load =4Ω, 6Ω BTL Mode

图 57. THD+N vs Output Power-BTL

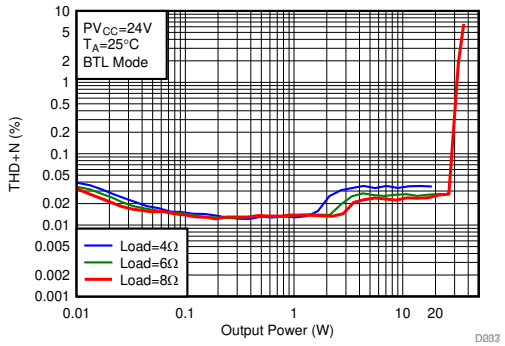

BD Modulation 2 Channel Run
F_{SW} = 768 kHz Load = 4Ω, 6Ω, 8Ω BTL Mode

图 58. THD+N vs Output Power-BTL

版权 © 2019, Texas Instruments Incorporated

Bridge Tied Load (BTL) Configuration Curves with BD Modulation (接下页)

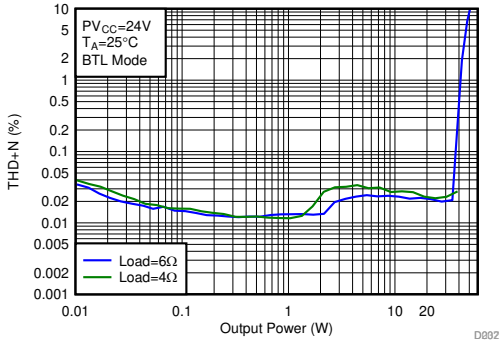

BD Modulation 1 Channel Run

F_{SW} = 768 kHz Load = 4Ω, 6Ω BTL Mode

图 59. THD+N vs Output Power-BTL

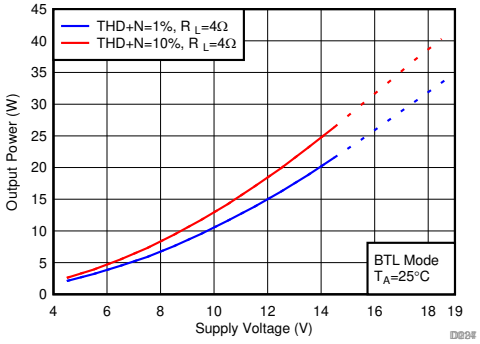

Dashed lines represent thermally limited region.

BD Modulation

F_{SW} = 768 kHz Load = 4Ω BTL Mode

图 60. Output Power vs Supply Voltage

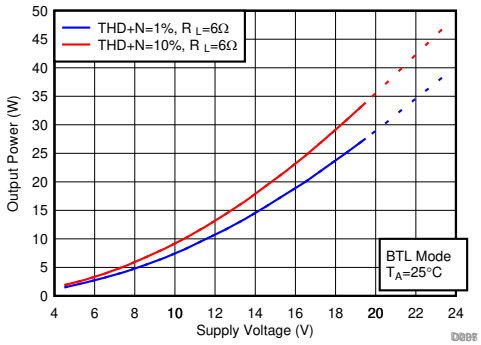

Dashed lines represent thermally limited region.

BD Modulation

F_{SW} = 768 kHz Load = 6Ω BTL Mode

图 61. Output Power vs Supply Voltage

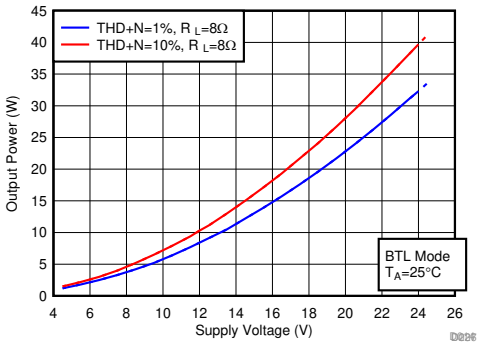

Dashed lines represent thermally limited region.

BD Modulation

F_{SW} = 768 kHz Load = 8Ω BTL Mode

图 62. Output Power vs Supply Voltage

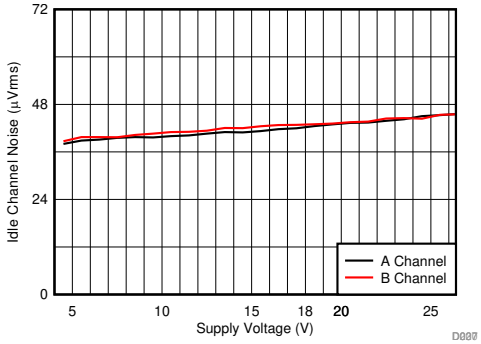

BD Modulation

F_{SW} = 768 kHz Load = 6Ω BTL Mode

图 63. Idle Channel Noise vs Supply Voltage

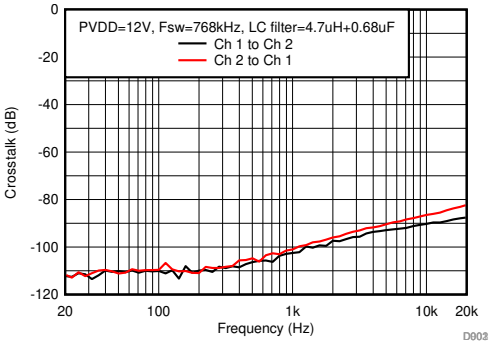

PVDD=12V BD Modulation

F_{SW} = 768 kHz Load = 6Ω BTL Mode

图 64. Crosstalk

Bridge Tied Load (BTL) Configuration Curves with BD Modulation (接下页)

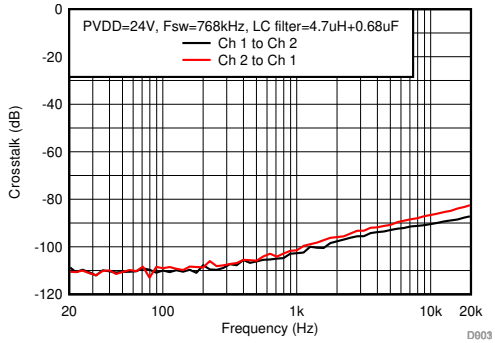

PVDD=12V BD Modulation
F_{SW} = 768 kHz Load = 6Ω BTL Mode

图 65. Crosstalk

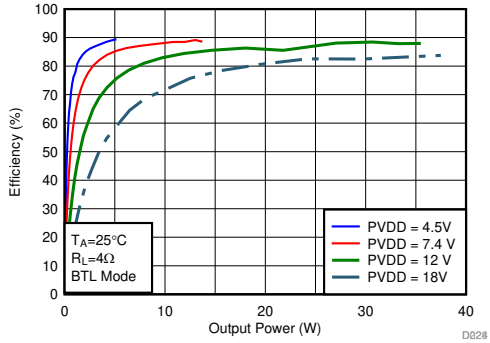

BD Modulation
F_{SW} = 768 kHz Load = 4Ω BTL Mode

图 66. Efficiency vs Output Power

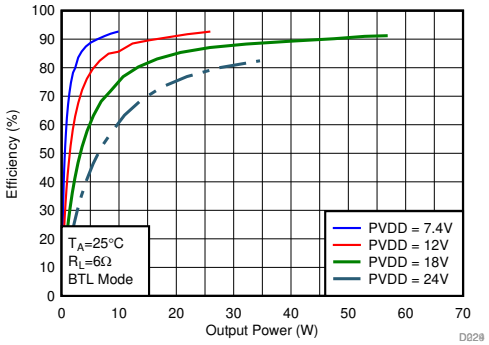

BD Modulation
F_{SW} = 768 kHz Load = 6Ω BTL Mode

图 67. Efficiency vs Output Power

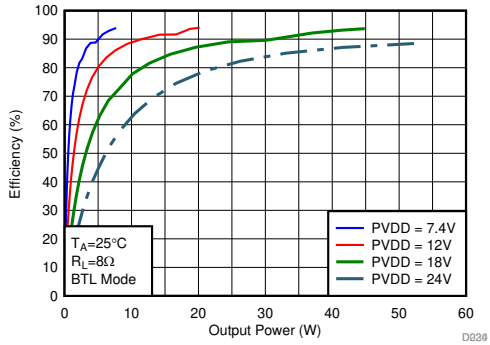

BD Modulation
F_{SW} = 768 kHz Load = 8Ω BTL Mode

图 68. Efficiency vs Output Power

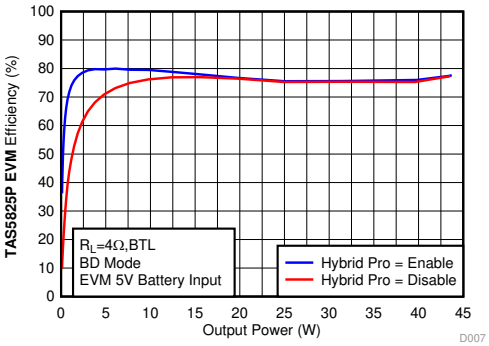

BD Modulation
F_{SW} = 384 kHz 5V Battery Input Default PPC3 Setting
Load=4Ω, BTL 5V~16V Boost (-5.5dB AGAIN)

图 69. EVM Efficiency Comparison ON/OFF Hybrid-Pro

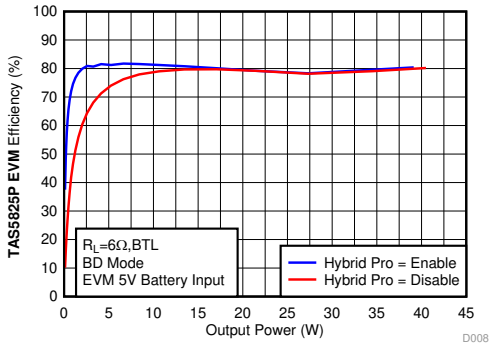

BD Modulation
F_{SW} = 384 kHz 5V Battery Input Default PPC3 Setting
Load=6Ω, BTL 5V~16V Boost (-5.5dB AGAIN)

图 70. EVM Efficiency Comparison ON/OFF Hybrid-Pro

版权 © 2019, Texas Instruments Incorporated

Bridge Tied Load (BTL) Configuration Curves with BD Modulation (接下页)

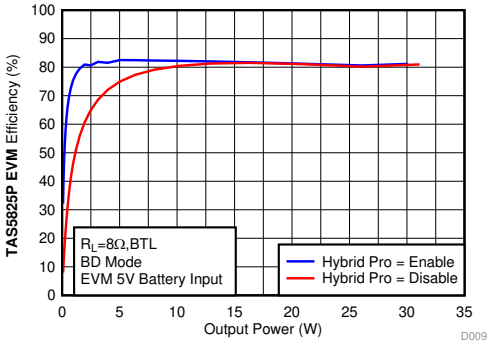

BD Modulation

F_{SW} = 384 kHz Load=8Ω, BTL　　5V Battery Input 5V~16V Boost　　Default PPC3 Setting (-5.5dB AGAIN)

图 71. EVM Efficiency Comparison ON/OFF Hybrid-Pro

7.7.4 Parallel Bridge Tied Load (PBTL) Configuration With BD Modulation

Free-air room temperature 25°C (unless otherwise noted) Measurements were made using TAS5825PEVM board and Audio Precision System 2722 with Analog Analyzer filter set to 20-kHz brickwall filter. All measurements taken with audio frequency set to 1 kHz and device PWM frequency set to 768 kHz, the LC filter used was 4.7 µH / 0.68 µF (Pre-Filter PBTL, the merging of the two output channels in this device can be done before the inductor portion of the output filter, see details in MONO (PBTL) Systems) , unless otherwise noted.

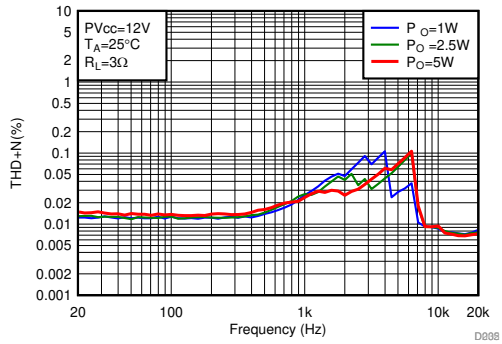

BD Modulation P_O = 1W,2.5W,5W
F_{SW} = 768 kHz Load = 3Ω PBTL Mode

图 72. THD+N vs Frequency-PBTL

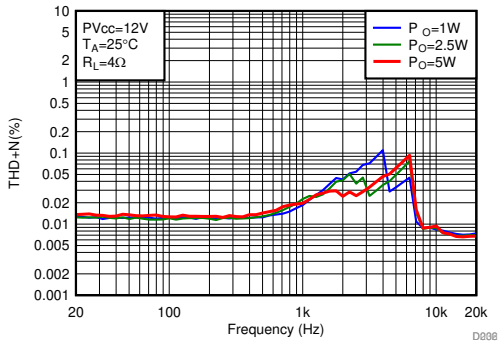

BD Modulation P_O = 1W,2.5W,5W
F_{SW} = 768 kHz Load = 4Ω PBTL Mode

图 73. THD+N vs Frequency-PBTL

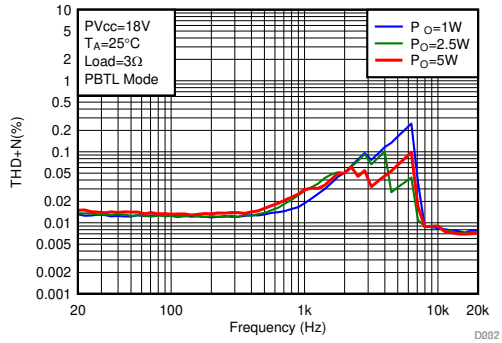

BD Modulation P_O = 1W,2.5W,5W
F_{SW} = 768 kHz Load = 3Ω PBTL Mode

图 74. THD+N vs Frequency-PBTL

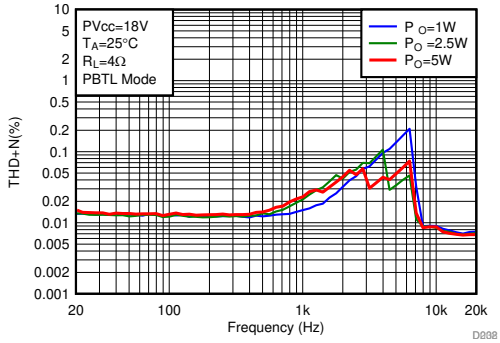

BD Modulation P_O = 1W,2.5W,5W
F_{SW} = 768 kHz Load = 4Ω PBTL Mode

图 75. THD+N vs Frequency-PBTL

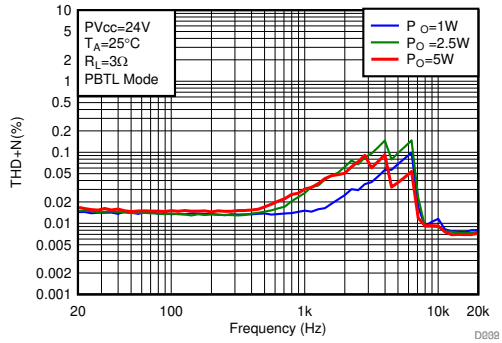

BD Modulation P_O = 1W,2.5W,5W
F_{SW} = 768 kHz Load = 3Ω PBTL Mode

图 76. THD+N vs Frequency-PBTL

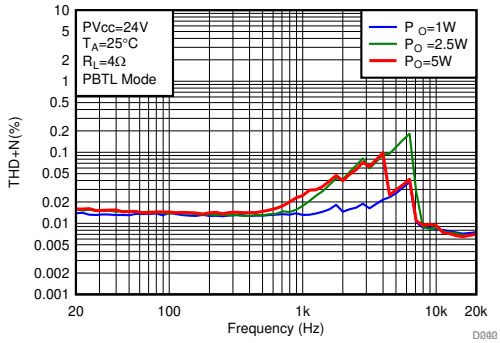

BD Modulation P_O = 1W,2.5W,5W
F_{SW} = 768 kHz Load = 4Ω PBTL Mode

图 77. THD+N vs Frequency-PBTL

版权 © 2019, Texas Instruments Incorporated

Parallel Bridge Tied Load (PBTL) Configuration With BD Modulation (接下页)

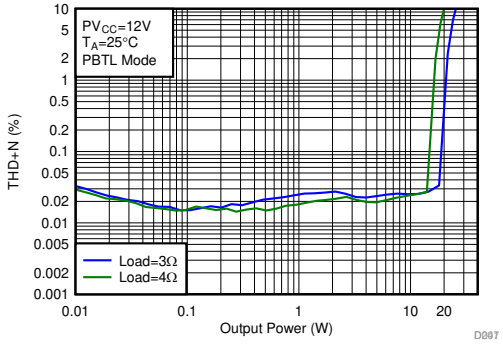

BD Modulation

F_{SW} = 768 kHz Load = 3Ω, 4Ω PBTL Mode

图 78. THD+N vs Output Power-PBTL

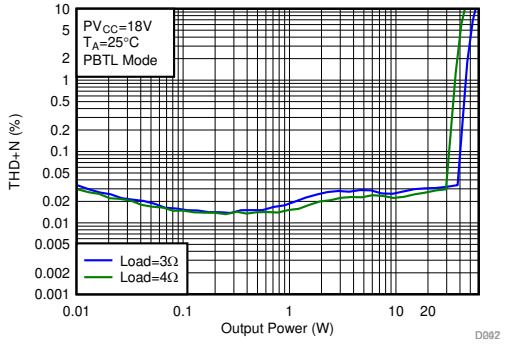

BD Modulation

F_{SW} = 768 kHz Load = 3Ω, 4Ω PBTL Mode

图 79. THD+N vs Output Power-PBTL

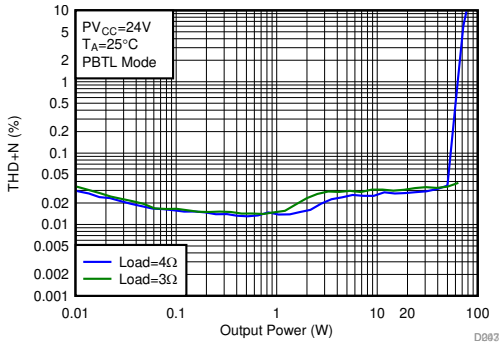

BD Modulation

F_{SW} = 768 kHz Load = 3Ω, 4Ω PBTL Mode

图 80. THD+N vs Output Power-PBTL

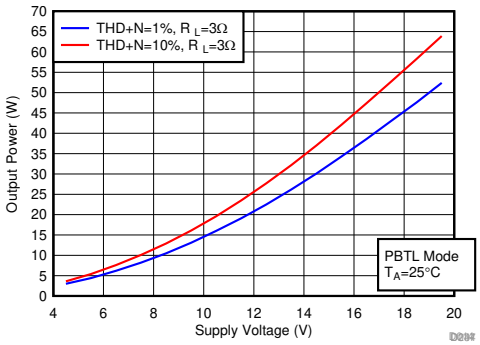

BD Modulation

F_{SW} = 768 kHz Load = 3Ω PBTL Mode

图 81. Output Power vs Supply Voltage

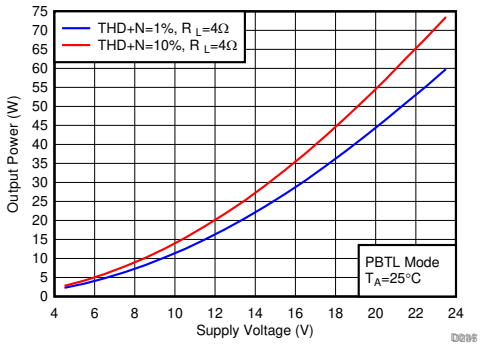

BD Modulation

F_{SW} = 768 kHz Load = 4Ω PBTL Mode

图 82. Output Power vs Supply Voltage

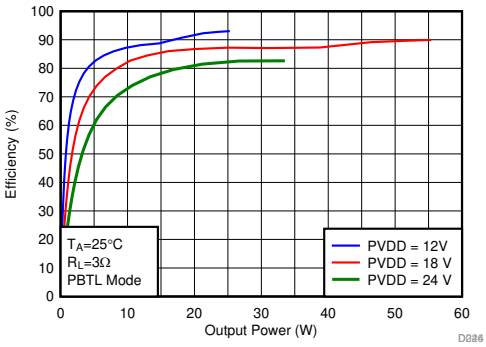

BD Modulation

F_{SW} = 768 kHz Load = 3Ω PBTL Mode

图 83. Efficiency vs Output Power

Parallel Bridge Tied Load (PBTL) Configuration With BD Modulation (接下页)

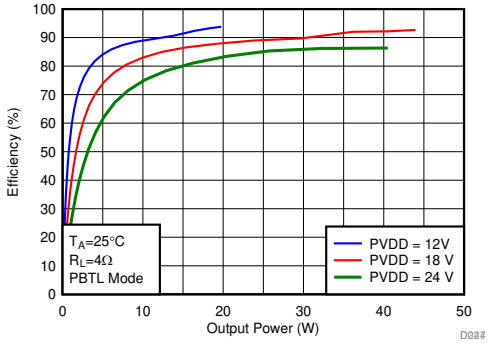

BD Modulation

F_{SW} = 768 kHz　　Load = 3Ω, PBTL

5V EVM Battery with default PPC3 setting (-5.5dB AGAIN)

图 84. Efficiency vs Output Power

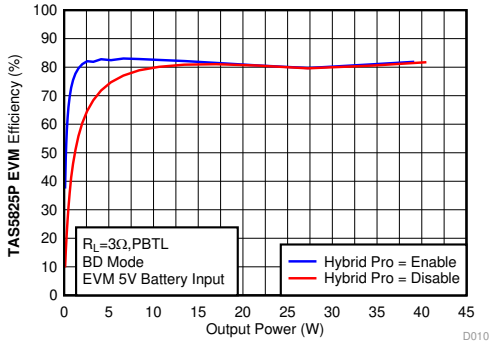

BD Modulation

F_{SW} = 384 kHz　　5V Battery Input　　Default PPC3 Setting

Load=3Ω, PBTL　　5V~16V Boost　　(-5.5dB AGAIN)

图 85. EVM Efficiency Comparison ON/OFF Hybrid-Pro

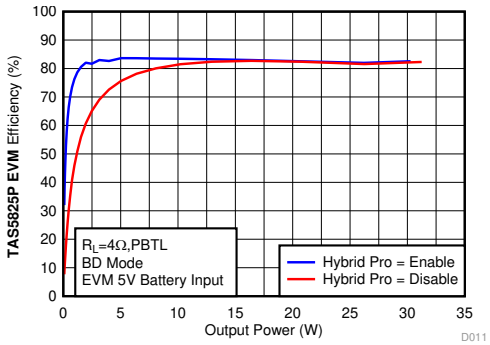

BD Modulation

F_{SW} = 384 kHz　　5V Battery Input　　Default PPC3 Setting

Load=4Ω, PBTL　　5V~16V Boost　　(-5.5dB AGAIN)

图 86. EVM Efficiency Comparison ON/OFF Hybrid-Pro

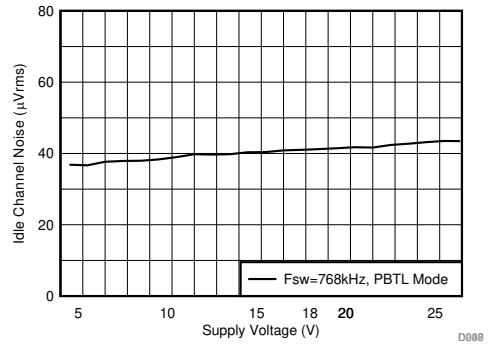

BD Modulation

F_{SW} = 768 kHz　　Load =4Ω　　PBTL Mode

图 87. Idle Channel Noise vs Supply Voltage

版权 © 2019, Texas Instruments Incorporated

8 Parameter Measurement Information

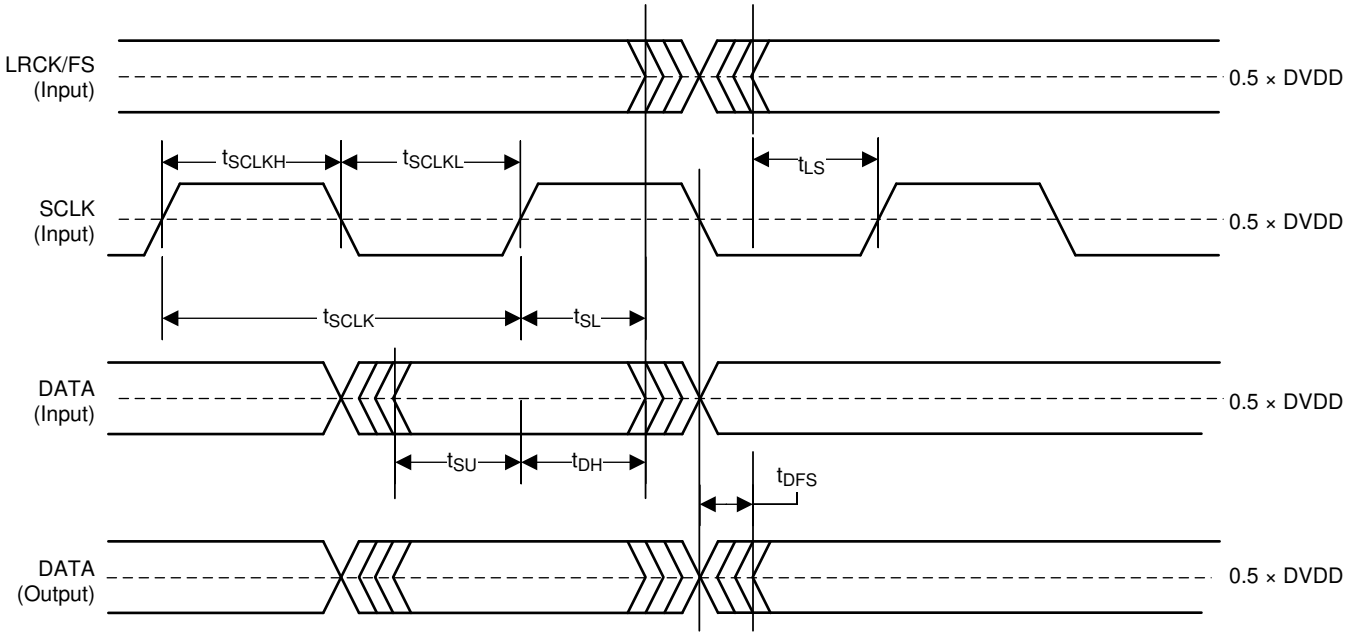

图 88. Serial Audio Port Timing in Slave Mode

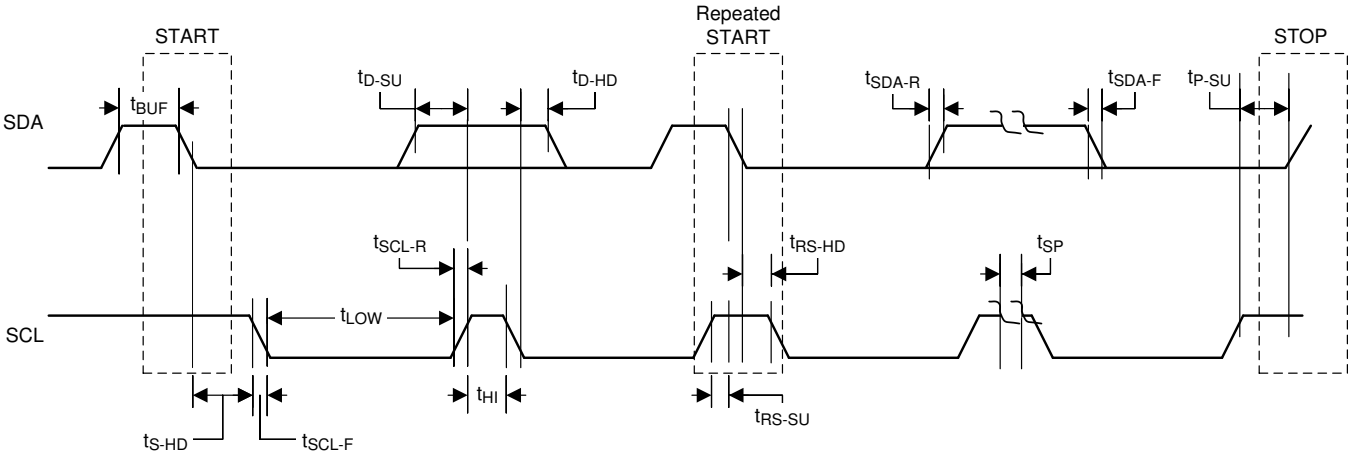

图 89. I²C Communication Port Timing Diagram

9 Detailed Description

9.1 Overview

TAS5825P is a proprietary and comprehensive device to provide excellent audio performance and high system efficiency when paired with an external DC-DC converter. Audio performance is specified by the coherent whole signal path: digital I/O and processor, stereo digital to PWM modulator and Closed-Loop Class-D amplifier. Hybrid-Pro algorithm improves audio system efficiency by controlling the external supply voltage and maintaining just enough margin to provide high dynamic range without clipping distortion to save as much power as possible. More details can be found: Digital Audio Processing.

- Digital I/O and processor: I^2C control, serial audio port, three digital GPIO pins, audio DSP subsystem with Hybrid-Pro algorithm and rich audio processing blocks.
- A stereo digital to PWM modulator.
- A flexible Closed-Loop amplifier capable of operating in stereo or mono, at several different switching frequencies, and with a variety of output voltages and loads.

The device requires only two power supplies for proper operation. A DVDD supply is required to power the low voltage digital circuitry. Another supply, called PVDD, is required to provide power to the output stage of the audio amplifier. Two internal LDOs generate 5 V / 1.5 V for analog / digital supply voltage respectively.

9.2 Functional Block Diagram

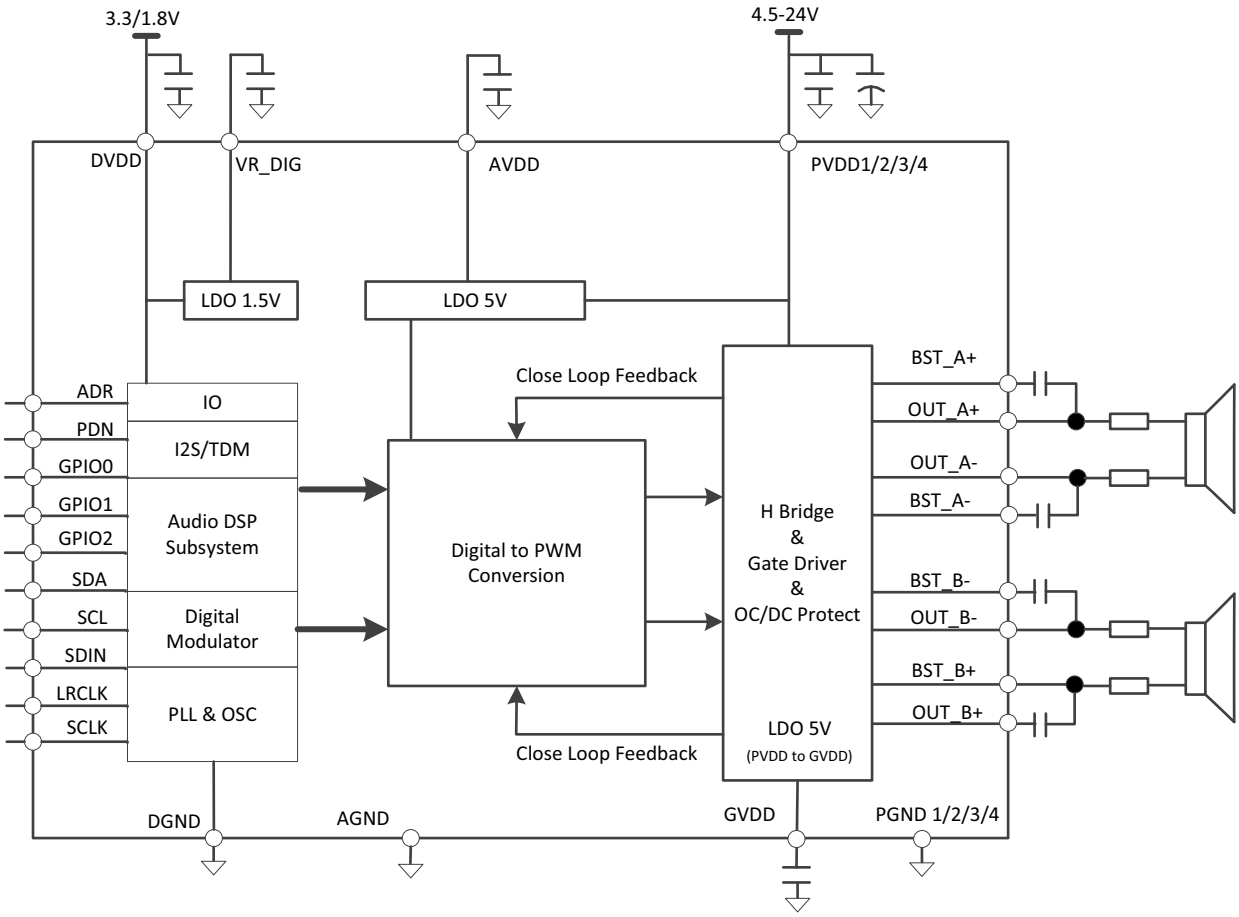

Copyright © 2017, Texas Instruments Incorporated

版权 © 2019, Texas Instruments Incorporated

9.3 Feature Description

9.3.1 Power Supplies

For system design, TAS5825P needs one 3.3-V or 1.8-V digital supply and another power-stage supply. Two internal voltage regulators provide suitable voltage levels for the gate drive circuitry and internal circuitry. The external pins are provided only as a connection point for off-chip bypass capacitors to filter the supply. Connecting external circuitry to these regulator outputs may result in reduced performance and damage to the device. Additionally, all circuitry requiring a floating voltage supply, that is, the high-side gate drive, is accommodated by built-in bootstrap circuitry requiring only a few external capacitors. To provide good electrical and acoustical characteristics, the PWM signal path for the output stage is designed as identical, independent half-bridges. For this reason, each half-bridge has separate bootstrap pins (BST_x). The gate drive voltages (GVDD) are derived from the PVDD voltage. Special attention should be paid to placing all decoupling capacitors as close to their associated pins as possible. In general, inductance between the power-supply pins and decoupling capacitors must be avoided. For a properly functioning bootstrap circuit, a small ceramic capacitor must be connected from each bootstrap pin (BST_x) to the power-stage output pin (OUT_x). When the power-stage output is low, the bootstrap capacitor is charged through an internal diode connected between the gate-drive regulator output pin (GVDD) and the bootstrap pin. When the power-stage output is high, the bootstrap capacitor potential is shifted above the output potential and thus provides a suitable voltage supply for the high-side gate driver.

9.3.2 Device Clocking

The TAS5825P devices have flexible systems for clocking. Internally, the device requires a number of clocks, mostly at related clock rates to function correctly. All of these clocks can be derived from the Serial Audio Interface.

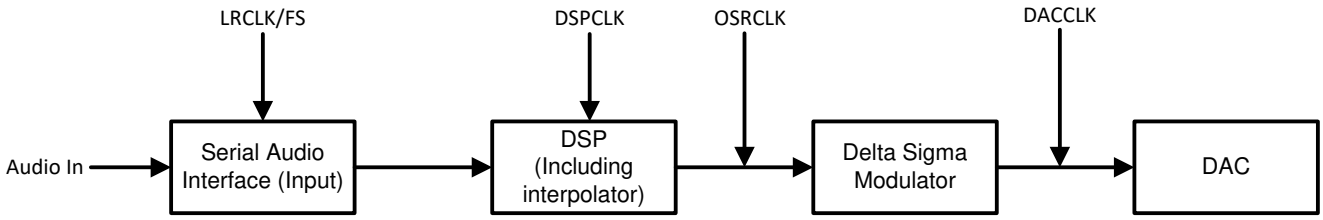

图 90. Audio Flow with Respective Clocks

图 90 shows the basic data flow and clock Distribution.

The Serial Audio Interface typically has 3 connection pins which are listed as follows:

- SCLK (Bit Clock)
- LRCLK/FS (Left/Right Word Clock or Frame Sync)
- SDIN (Input Data)

The device has an internal PLL that is used to take SCLK and create the higher rate clocks required by the DSP and the DAC clock.

The TAS5825P device has an audio sampling rate detection circuit that automatically senses which frequency the sampling rate is operating. Common audio sampling frequencies of 32 kHz, 44.1kHz – 48 kHz, 88.2 kHz – 96 kHz are supported. The sampling frequency detector sets the clock for DAC and DSP automatically.

If the input LRCLK/SCLK stopped during music playing, the TAS5825P DSP switches to sleep state and waiting for the clock recovery (Class D output switches to Hiz automatically), once LRCLK/SCLK recovered, TAS5825P auto recovers to the play mode. There is no need to reload the DSP code.

Feature Description (接下页)

9.3.3 Serial Audio Port – Clock Rates

The serial audio interface port is a 3-wire serial port with the signals LRCLK/FS , SCLK , and SDIN. SCLK is the serial audio bit clock, used to clock the serial data present on SDIN into the serial shift register of the audio interface. Serial data is clocked into the TAS5825P device with SCLK. The LRCLK/FS pin is the serial audio left/right word clock or frame sync when the device is operated in TDM Mode.

表 1. Audio Data Formats, Bit Depths and Clock Rates

FORMAT	DATA BITS	MAXIMUM LRCLK/FS FREQUENCY (kHz)	SCLK RATE (f_S)
I^2S/LJ/RJ	32, 24, 20, 16	32 to 92	64, 32
TDM	32, 24, 20, 16	32	128
		44.1,48	128,256,512
		96	128,256

When Clock halt, non-supported SCLK to LRCLK(FS) ratio is detected, the device reports Clock Error in Register 113 (Register Address 0x71).

9.3.4 Clock Halt Auto-recovery

As some of host processor halts the I^2S clock when there is no audio playing. When Clock halt, the device puts all channels into the Hi-Z state and reports Clock Error in Register 113 (Register Address 0x71). After audio clocks recovery, the device automatically returns to the previous state.

9.3.5 Sample Rate on the Fly Change

TAS5825P supports LRCLK(FS) rate on the fly change. For example, change LCRLK from 32 kHz to 48 kHz or 96 kHz, Host processor needs to put the LRCLK(FS)/SCLK to Halt state at least 10ms before changing to the new sample rate.

9.3.6 Serial Audio Port - Data Formats and Bit Depths

The device supports industry-standard audio data formats, including standard I2S, left-justified, right-justified and TDM/DSP data. Data formats are selected via Register (Register Address 0x33h -D[5:4]). If the high width of LRCLK/FS in TDM/DSP mode is less than 8 cycles of SCK, the register (Register Address 0x33h -D[3:2]) should set to 01. All formats require binary two's complement, MSB-first audio data; up to 32-bit audio data is accepted. All the data formats, word length and clock rate supported by this device are shown in Table 1. The data formats are detailed in 图 91 through 图 95. The word length are selected via Register (Register Address 0x33h -D[1:0]). The offsets of data are selected via Register (Register Address 0x33h -D[7]) and Register (Register Address 0x34h -D[7:0]). Default setting is I2S and 24 bit word length.

版权 © 2019, Texas Instruments Incorporated

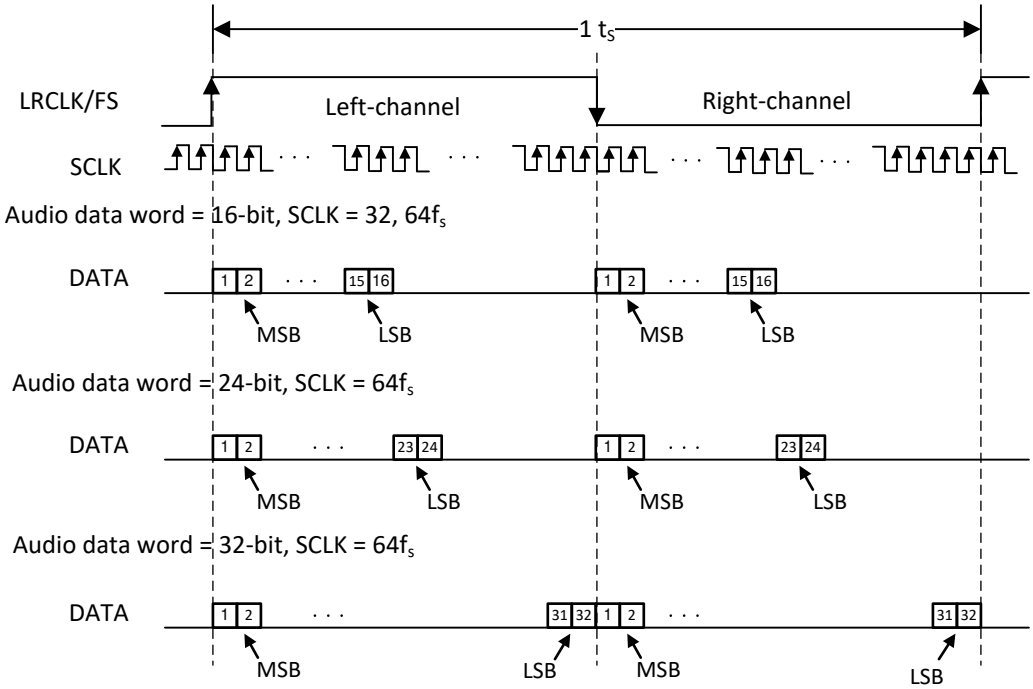

图 91. Left Justified Audio Data Format

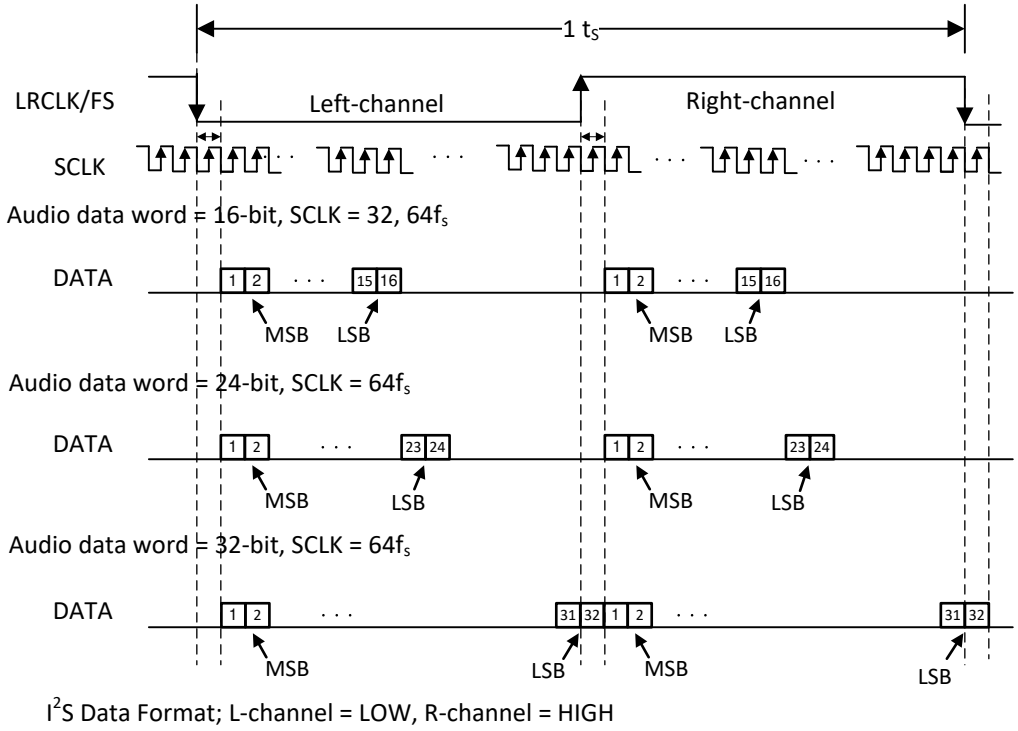

I^2S Data Format; L-channel = LOW, R-channel = HIGH

图 92. I^2S Audio Data Format

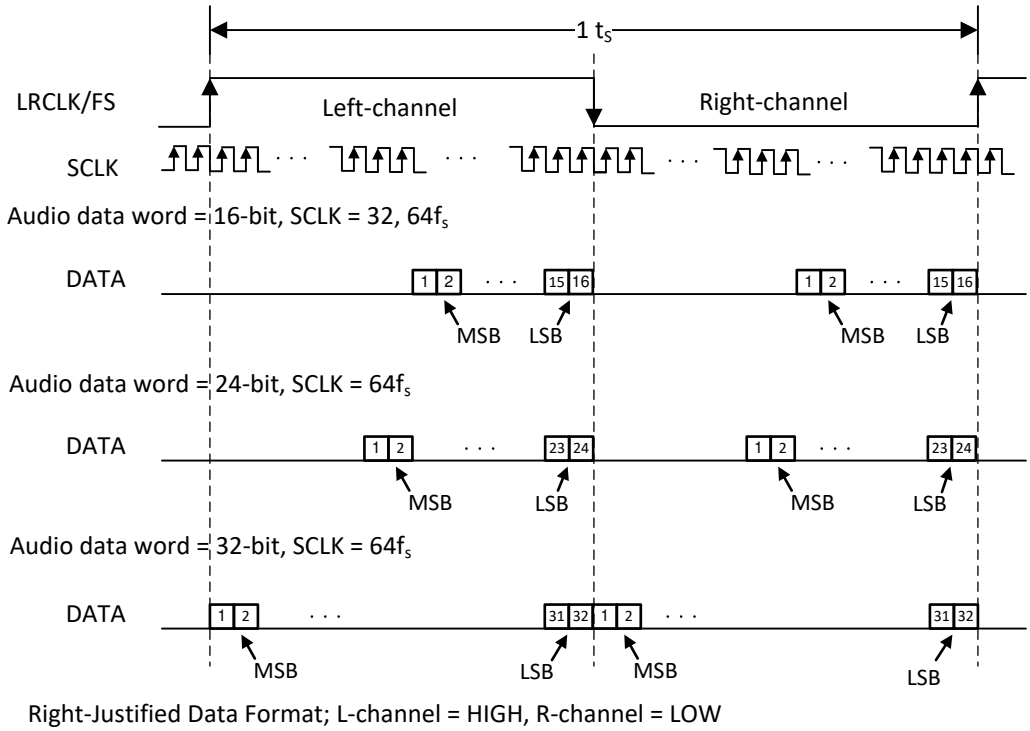

Right Justified Data Format; L-channel = HIGH, R-channel = LOW

图 93. Right Justified Audio Data Format

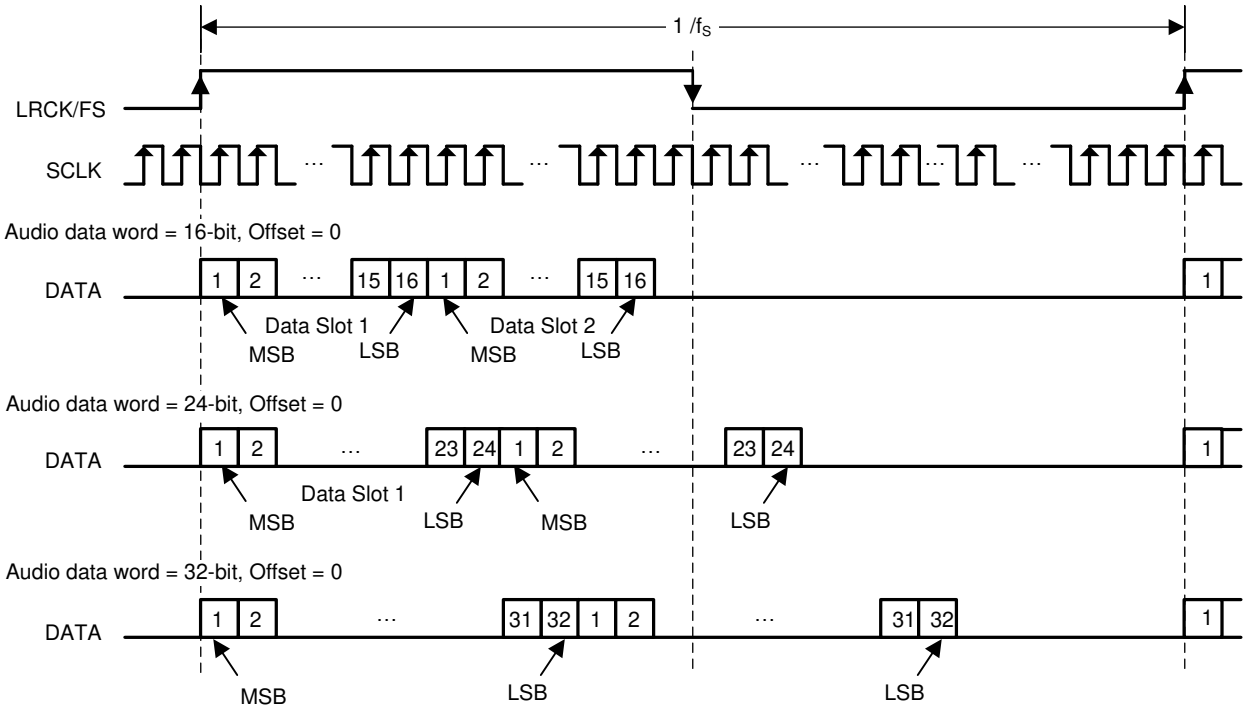

TDM Data Format with OFFSET = 0

In TDM Modes, Duty Cycle of LRCK/FS should be 1x SCLK at minimum. Rising edge is considered frame start.

图 94. TDM 1 Audio Data Format

版权 © 2019, Texas Instruments Incorporated

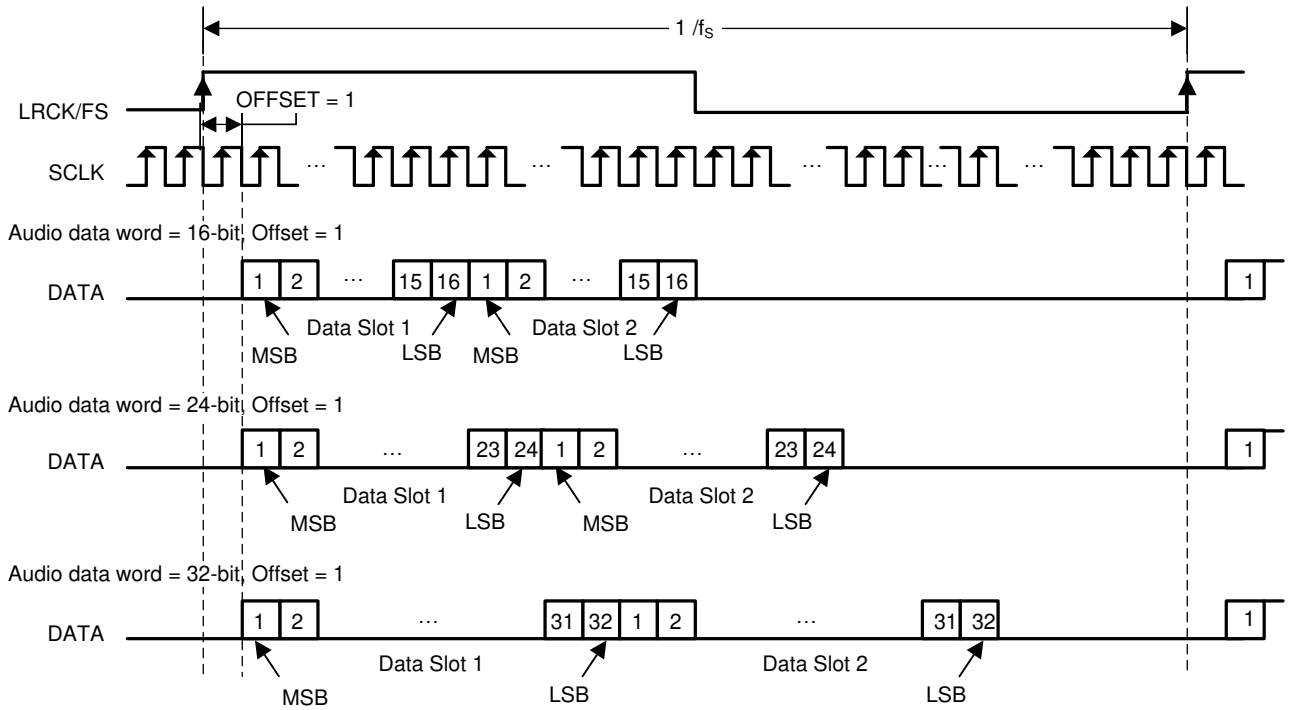

图 95. TDM 2 Audio Data Format

9.3.7 Digital Audio Processing

TAS5825P digital audio processing includes three main functions: basic audio tuning blocks, Hybrid-Pro algorithm and advanced features.

Basic audio tuning blocks are SRC (sample rate converter), stereo channel Input Mixer, 15 BQs for each channel, pop click free Volume, multi-bands DRC, and AGL. Detailed introduction of each block can be found with TAS5825M Process Flows.

Hybrid-Pro can be used in conjunction with Hybrid Modulation, which is an innovative Class-D internal PWM modulation scheme to improve efficiency even more without compromising THD+N performance. Hybrid-Pro goes beyond Hybrid PWM modulation from system efficiency perspective, by tracking audio signal envelope with advanced look-ahead DSP structure, controlling the external PVDD supply voltage rail, and maintaining just enough margin to provide high dynamic range without clipping distortion to save as much power as possible. Refer TAS5825P User Guide for more configurable options:

- Optional 8 steps 384 kHz PWM format or 16 steps 192kHz PWM format Hybrid-Pro control waveform for external DC-DC converter.
- Configurable max 4ms look-ahead audio signal delay buffer, which provides capability to fit various applications systems' DC-DC bandwidth and power supply coupling capacitance.
- Max 512 samples audio signal peak hold to optimize power supply voltage rail transition from large audio input to small level, which is useful to avoid clipping distortion.
- Hybrid-Pro Margin automatically adjusts audio signal trigger level and each step level. Fine tune it to achieve the balance between efficiency and envelope tracking speed.

Advanced features include PVDD Sensing (Dynamic Headroom Tracking), Thermal Foldback and Hybrid PWM modulation. They are implemented based on integrated 8-bit PVDD sense ADC and 4 level temperature sensor. Refer to application note:TAS5825M Advanced Features.

9.3.8 Class-D Audio Amplifier

Following the digital clipper, the interpolated audio data is next sent to the Closed Loop Class-D amplifier, whose first stage is Digital to PWM Conversion (DPC) block. In this block, the stereo audio data is translated into two pairs of complimentary pulse width modulated (PWM) signals which are used to drive the outputs of the speaker amplifier. Feedback loops around the DPC ensure constant gain across supply voltages, reduce distortion, and increase immunity to power supply injected noise and distortion. The analog gain is also applied in the Class-D amplifier section of the device. The gain structures are discussed in detail below for both 图 96 and 表 2. The switching rate of the amplifier is configurable by register (Register Address 0x02h -D[6:4])

9.3.8.1 Speaker Amplifier Gain Select

A combination of digital gain and analog gain is used to provide the overall gain of the speaker amplifier. As seen in 图 96, the audio path of the TAS5825P consists of a digital audio input port, a digital audio path, a digital to PWM converter (DPC), a gate driver stage, a Class D power stage, and a feedback loop which feeds the output information back into the DPC block to correct for distortion sensed on the output pins. The total amplifier gain is comprised of digital gain, shown in the digital audio path and the analog gain from the input of the analog modulator to the output of the speaker amplifier power stage.

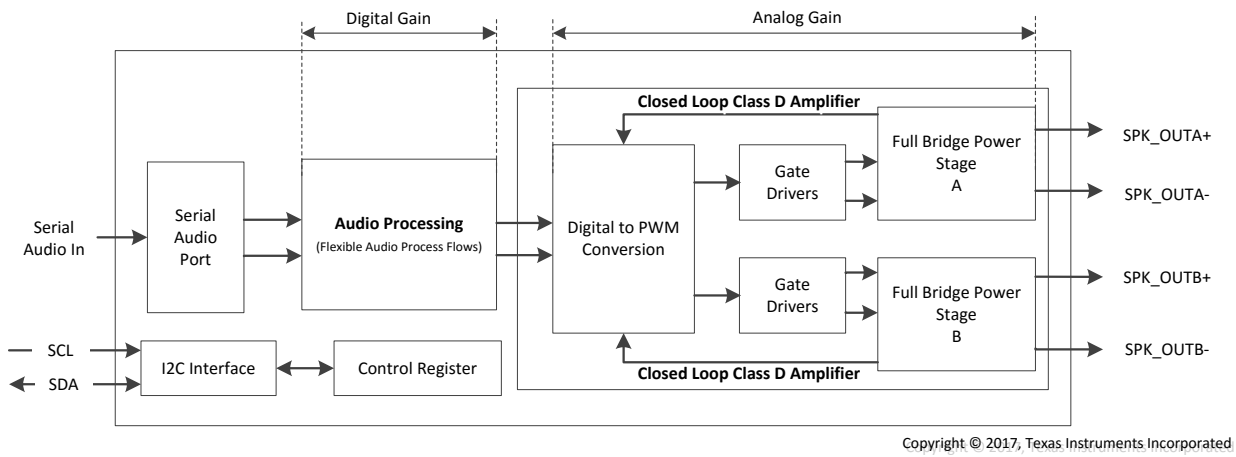

图 96. Speaker Amplifier Gain

As shown in 图 96, the first gain stage for the speaker amplifier is present in the digital audio path. It consists of the volume control and the digital boost block. The volume control is set to 0 dB by default, it does not change. For all settings of the register 0x54, AGAIN[4:0], the digital boost block remains at 0 dB. These gain settings ensure that the output signal is not clipping at different PVDD levels. 0dBFS output is 29.5-V peak output voltage

表 2. Analog Gain Setting

AGAIN <4:0>	GAIN (dBFS)	AMPLIFIER OUTPUT PEAK VOLTAGE (V)
00000	0	29.5
00001	-0.5	27.85
…….	……..	…….
11111	-15.5	4.95

9.3.8.2 Class D Loop Bandwidth and Switching Frequency Setting

closed loop structure provides Loop bandwidth setting option (Setting by register 83 -Register address 0x53h-D[6-5]) to co-work with different switching frequency (Setting by register 2 -Register address 0x02h-D[6-4]). 表 3 shows recommended settings for the Loop Bandwidth and Switching Frequency selection. Same Fsw, Better THD+N performance with higher BW.

版权 © 2019, Texas Instruments Incorporated

表 3. Loop Bandwidth and Switching Frequency Setting

Modulation Scheme	Fsw	BW (Loop Band Width)	Notes
Hybrid, 1SPW	384kHz	80kHz	Principle: Fsw (Switching Frequency) ≥ 4.2 × Loop Bandwidth
	480kHz	80kHz, 100kHz	
	576kHz	80kHz, 100kHz, 120kHz	
	768kHz	80kHz, 100kHz, 120kHz, 175kHz	
BD	384kHz	80kHz, 100kHz, 120kHz	Principle: Fsw (Switching Frequency) ≥ 3 × Loop Bandwidth
	480kHz	80kHz, 100kHz, 120kHz	
	576kHz	80kHz, 100kHz, 120kHz, 175kHz	
	768kHz	80kHz, 100kHz, 120kHz, 175kHz	

9.4 Device Functional Modes

9.4.1 Software Control

The TAS5825P device is configured via an I^2 C communication port.

The I^2C Communication Protocol is detailed in the I^2C Communication Port section. The I^2C timing requirements are described in the I^2C Bus Timing – Standard and I^2C Bus Timing – Fast sections.

There are two methods to program TAS5825P DSP memory.

- Loading with I^2C Communication Port by host processor. This method is recommend for most of applications.
- Fast loading from external EEPROM with SPI communication Port. This method can be used in some applications which need fast loading to save initialization time or release the Host Controller's loading. TAS5825P supports to load the DSP memory data from external EEPROM via SPI. The GPIOs can be configured as SI,SO and SCK for EEPROM via Register (0x60,0x61,0x62,0x63,0x64). The chip selection $\overline{CS}$ of EEPROM is controlled by the Host Processor. See application note: Load TAS5825M Configurations from EEPROM via SPI.

9.4.2 Speaker Amplifier Operating Modes

The TAS5825P device can be used with two different amplifier configurations, can be configured by Register 0x02h -D[2]:

- BTL Mode
- PBTL Mode

9.4.2.1 BTL Mode

In BTL mode, the TAS5825P amplifies two independent signals, which represent the left and right portions of a stereo signal. The amplified left signal is presented on differential output pair shown as OUT_A+ and OUT_A-, the amplified right signal is presented on differential output pair shown as OUT_B+ and OUT_B-.

9.4.2.2 PBTL Mode

The PBTL mode of operation is used to describe operation in which the two outputs of the device are placed in parallel with one another to increase the power sourcing capabilities of the device. On the output side of the TAS5825P device, the summation of the devices can be done before the filter in a configuration called Pre-Filter Parallel Bridge Tied Load (PBTL). However, the two outputs can be required to merge together after the inductor portion of the output filter. Doing so does require two additional inductors, but allows smaller, less expensive inductors to be used because the current is divided between the two inductors. The process is called Post-Filter PBTL. On the input side of the TAS5825P device, the input signal to the PBTL amplifier is left frame of I2S or TDM data.

9.4.3 Low EMI Modes

TAS5825P employs several modes to minimize EMI during playing audio, and they can be used based on different applications.

Device Functional Modes (接下页)

9.4.3.1 Spread Spectrum

Spread spectrum is used in some inductor free case to minimize EMI noise. The TAS5825P supports Spread Spectrum with triangle mode.

User need configure register SS_CTRL0 (0x6B) to Enable triangle mode and enable spread spectrum, select spread spectrum frequency and range with SS_CTRL1 (0x6C). For 384kHz F_{SW} which configured by DEVICE_CTRL1 (0x02), the spread spectrum frequency and range are described in 表 4.

表 4. Triangle Mode Spread Spectrum Frequency and Range Selection

SS_TRI_CTRL[3:0]	0	1	2	3	4	5	6	7
Triangle Freq	24k				48k			
Spread Spectrum Range	5%	10%	20%	25%	5%	10%	20%	25%

User Application example: Central Switching Frequency is 384kHz, Triangle Frequency is 24kHz.

Register 0x6b = 0x03 // Enable Spread Spectrum

Register 0x6c = 0x03 // SS_CTRL[3:0]=0011, Triangle Frequency = 24kHz, Spread Spectrum Range should be 25% (336kHz~432kHz)

9.4.3.2 Channel to Channel Phase Shift

This device supports channel to channel 180-degree PWM phase shift to minimize the EMI. Bit 0 of Register 0x53 can be used to disable or enable the phase shift. If better pop/click performance is needed, then it is suggested to disable this function with BD mode.

NOTE

Channel to Channel Phase Shift and Multi-Devices PWM Phase Synchronization only works in BD Modulation, but inoperative in 1SPW Modulation and Hybrid Modulation.

9.4.3.3 Multi-Devices PWM Phase Synchronization

TAS5825P support up to 4 phases selection for the multi devices application system. For example, when a system integrated 4 TAS5825P devices, user can select phase0/1/2/3 for each device by register PHASE_CTRL(0x6A), which means there is a 45 degree phase shift between each device to minimize the EMI.

There are two methods for Multi-Device PWM phase synchronization. Phase Synchronization With I^2S Clock In Startup Phase or Phase Synchronization With GPIO.

9.4.3.3.1 Phase Synchronization With I^2S Clock In Startup Phase

1. Step 1, Halt I^2S clock.
2. Step 2, Configure each device phase selection and enable the phase synchronization. For example: Register 0x6A=0x03 for device 0; Register 0x6A=0x07 for device 1; Register 0x6A=0x0B for device 2; Register 0x6A=0x0F for device 3.
3. Step 3, Configure each device into HIZ mode.
4. Step 4, Provide I^2S to each device. Phase synchronization for all 4 devices is automatically done by internal sequence.
5. Step 5, Initialize the DSP code (This step can be skipped if only need to do the Phase Synchronization).
6. Step 6, Device to Device PWM phase shift should be fixed with 45 degree.

版权 © 2019, Texas Instruments Incorporated

9.4.3.3.2 Phase Synchronization With GPIO

1. Step 1, Connect GPIOx pin of each device to SOC's GPIO pin on PCB.
2. Step 2, Configure each device GPIOx as phase sync input usage by registers GPIO_CTRL (0X60) and GPIO_INPUT_SEL (0x64).
3. Step 3, Select different phase for each device and enable phase synchronization by register PHASE_CTRL (0x6A).
4. Step 4, Configure each device into PLAY mode by register DEVICE_CTRL2 (0x03) and monitor the POWER_STATE register (0x68) until device changed to HIZ state.
5. Step 5, Give a 0 to 1 toggle on SOC GPIO. Then all 4 devices enters into PLAY mode and device to Device PWM phase shift should be fixed with 45 degree.
6. Step 6, Phase Synchronization has been finished. Configure the GPIOx pin to other function based on the application.

9.4.4 Thermal Foldback

The Thermal Foldback (TFB), is designed to protect TAS5825P from excessive die temperature increases, in case the device operates beyond the recommended temperature/power limit, or with a weaker thermal system design than recommended. It allows the TAS5825P to play as loud as possible without triggering unexpected thermal shutdown. When the die temperature triggers the over-temperature warning (OTW) level (TAS5825P has four different temperature threshold, each threshold is indicated in I^2C register 0x73 bits 0,1,2 and 3), an internal AGL (Automatic Gain Limiter) reduces the digital gain gradually, lower value of OTW, smaller attenuation added, with the OTW waring goes higher, more attenuation added. Once the die temperature drops below the OTW, the device's digital gain gradually returns to the former setting. Both the attenuation gain and adjustable rate are programmable. The TFB gain regulation speed (attack rate and release rate) settings are the same as a regular AGL, which is also configurable with TAS5825P App in PurePathTM Console3.

9.4.5 Device State Control

Except Shutdown Mode, TAS5825P has other 4 states for different power dissipation which listed in the *Electrical Characteristics Table*.

- Deep Sleep Mode. Register 0x03h -D[1:0]=00, Device stays in Deep Sleep Mode. In this mode, I^2 C block keep works. This mode can be used to extend the battery life time in some portable speaker application case, once the host processor stopped playing audio for a long time, TAS5825P can be set to Deep Sleep Mode to minimize power dissipation until host processor start playing audio again. Device returns back to Play Mode by setting Register 0x03h -D[1:0] to 11. Compare with Shutdown Mode (Pull $\overline{PDN}$ Low), enter or exit Deep Sleep Mode, DSP keeps active.
- Sleep Mode. Register 0x03h -D[1:0]=01, Device stays in Sleep Mode. In this mode, I^2 C block, Digital core, DSP Memory , 5V Analog LDO keep works. Compare with Shutdown Mode (Pull $\overline{PDN}$ Low), enter or exit Sleep Mode, DSP keeps active.
- Output Hiz Mode. Register 0x03h -D[1:0]=10, Device stays in Hiz Mode. In this mode, Only output driver set to be Hiz state, all other block work normally.
- Play Mode. Register 0x03h -D[1:0]=11, Device stays in Play Mode.

9.4.6 Device Modulation

TAS5825P has 3 modulation schemes: BD modulation, 1SPW modulation and Hybrid modulation. Select modulation schemes for TAS5825P with Register 0x02 [1:0]-DAMP_MOD.

9.4.6.1 BD Modulation

This is a modulation scheme that allows operation without the classic LC reconstruction filter when the amp is driving an inductive load with short speaker wires. Each output is switching from 0 volts to the supply voltage. The OUTPx and OUTNx are in phase with each other with no input so that there is little or no current in the speaker. The duty cycle of OUTPx is greater than 50% and OUTNx is less than 50% for positive output voltages. The duty cycle of OUTPx is less than 50% and OUTNx is greater than 50% for negative output voltages. The voltage across the load sits at 0 V throughout most of the switching period, reducing the switching current, which reduces any I^2R losses in the load.

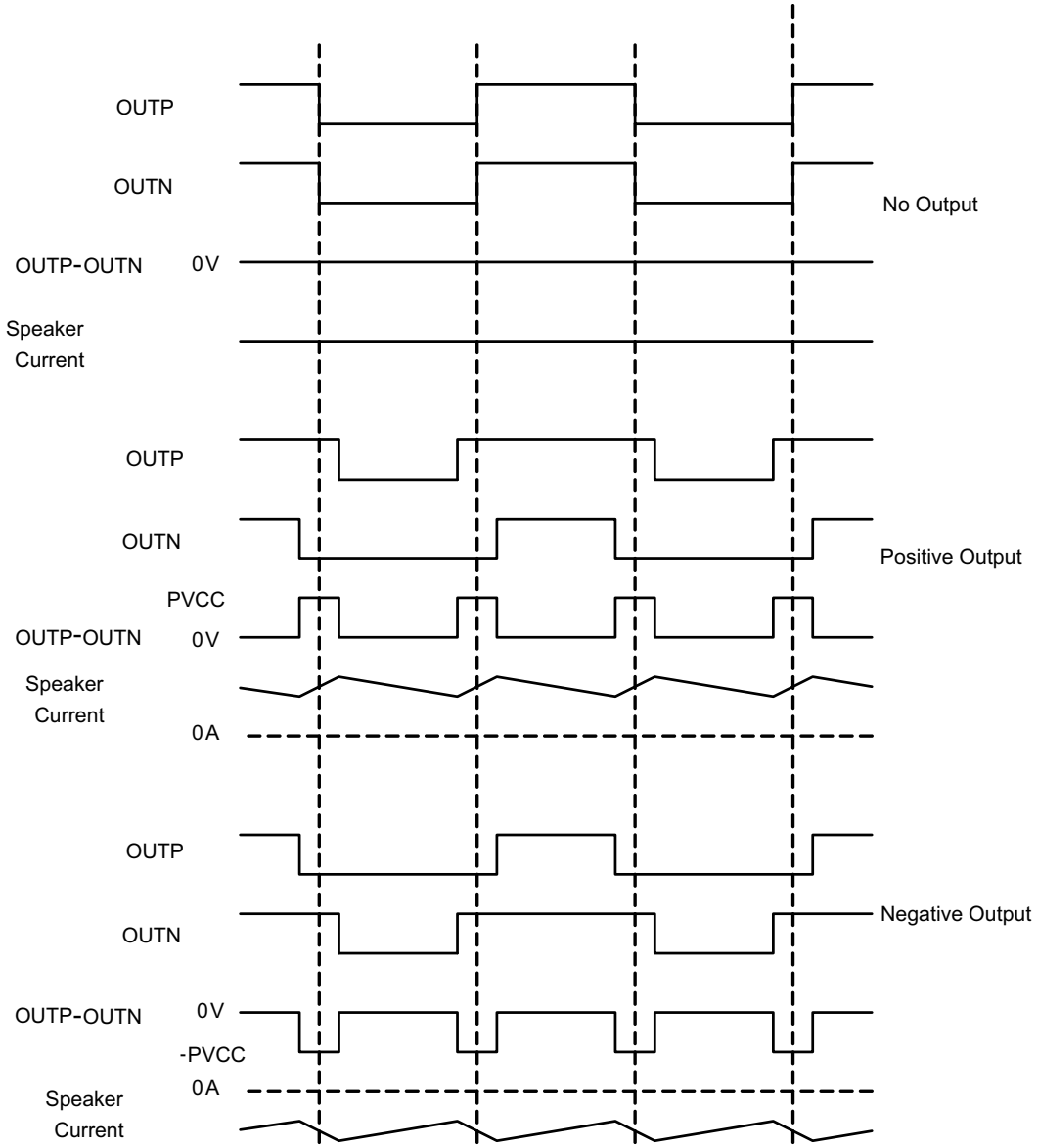

图 97. BD Mode Modulation

版权 © 2019, Texas Instruments Incorporated

9.4.6.2 1SPW Modulation

The 1SPW mode alters the normal modulation scheme in order to achieve higher efficiency with a slight penalty in THD degradation and more attention required in the output filter selection. In Low Idle Current mode the outputs operate at ~17% modulation during idle conditions. When an audio signal is applied, one output decreases and one increases. The decreasing output signal rails to GND. At this point all the audio modulation takes place through the rising output. The result is that only one output is switching during a majority of the audio cycle. Efficiency is improved in this mode due to the reduction of switching losses.

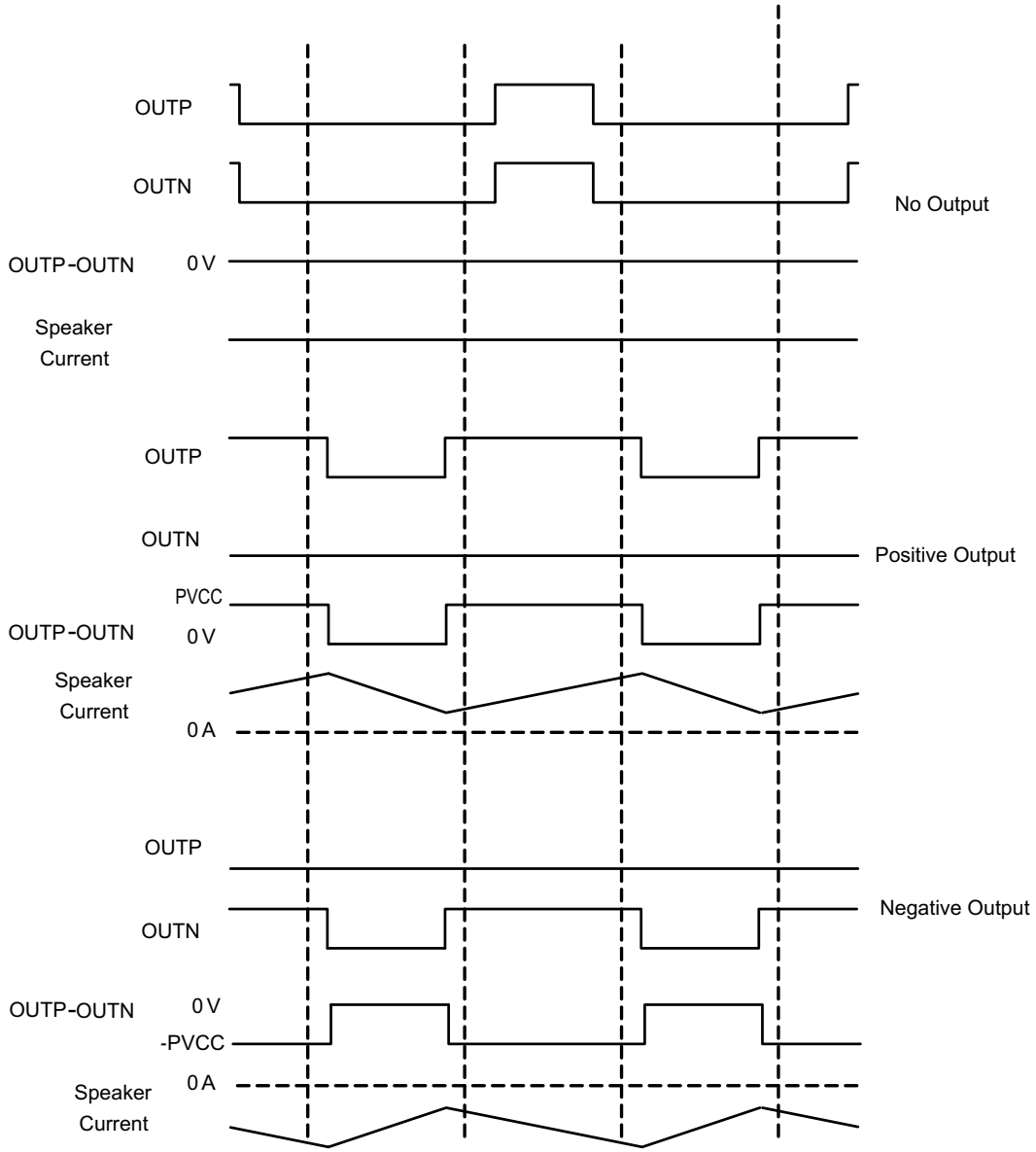

图 98. 1SPW Mode Modulation

9.4.6.3 Hybrid Modulation

Hybrid Modulation is designed for minimized power loss without compromising the THD+N performance, and is optimized for battery-powered applications. With Hybrid modulation, TAS5825P detects the input signal level and adjust PWM duty cycle dynamically based on PVDD. Hybrid modulation achieves ultra low idle current and maintains the same audio performance level as the BD Modulation.

注

As Hybrid Modulation need the internal DSP to detect the input signal level and adjust PWM duty cycle dynamically. To use the Hybrid Modulation, users need to select the corresponding process flows which support Hybrid Modulation in TAS5825P PPC3 App. Look into TAS5825P PPC3 App for more information about TAS5825P flexible audio process flows.

9.5 Programming and Control

9.5.1 I^{2}C Serial Communication Bus

The device has a bidirectional serial control interface that is compatible with I^{2}C bus protocol and supports 100 and 400-kHz data transfer rates for random and sequential write and read operations as a slave device. Because the TAS5825P register map and DSP memory spans multi pages, the user should change from page to page before writing individual register or DSP memory. Changing from page to page is accomplished via register 0 on each page. This register value selects the page address, from 0 to 255. All registers listed in TAS5825P Datasheet belongs to Page 0

9.5.2 I^{2}C Slave Address

The TAS5825P device has 7 bits for the slave address. The first five bits (MSBs) of the slave address are factory preset to 10011(0x9x). The next two bits of address byte are the device select bits which can be user-defined by ADR pin in 表 5.

表 5. I^{2}C Slave Address Configuration

ADR PIN Configuration	MSBs					User Define		LSB
0 Ω to GND	1	0	0	1	1	0	0	R/$\overline{W}$
1kΩ to GND	1	0	0	1	1	0	1	R/$\overline{W}$
4.7kΩ to GND	1	0	0	1	1	1	0	R/$\overline{W}$
15kΩ to GND	1	0	0	1	1	1	1	R/$\overline{W}$

9.5.2.1 Random Write

As shown in 图 99, a single-byte data-write transfer begins with the master device transmitting a start condition followed by the I^{2}C device address and the read/write bit. The read/write bit determines the direction of the data transfer. For a write data transfer, the read/write bit is a 0. After receiving the correct I^{2}C device address and the read/write bit, the device responds with an acknowledge bit. Next, the master transmits the address byte corresponding to the internal memory address being accessed. After receiving the address byte, the device again responds with an acknowledge bit. Next, the master device transmits the data byte to be written to the memory address being accessed. After receiving the data byte, the device again responds with an acknowledge bit. Finally, the master device transmits a stop condition to complete the single-byte data-write transfer.

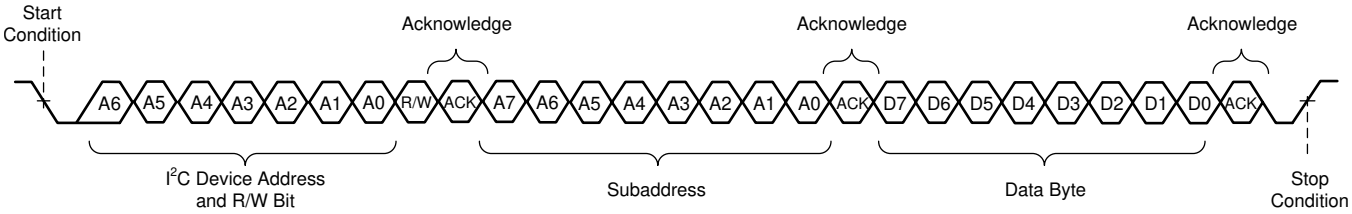

图 99. Random Write Transfer

9.5.2.2 Sequential Write

A sequential data-write transfer is identical to a single-byte data-write transfer except that multiple data bytes are transmitted by the master to the device as shown in 图 100. After receiving each data byte, the device responds with an acknowledge bit and the I^2 subaddress is automatically incremented by one.

版权 © 2019, Texas Instruments Incorporated

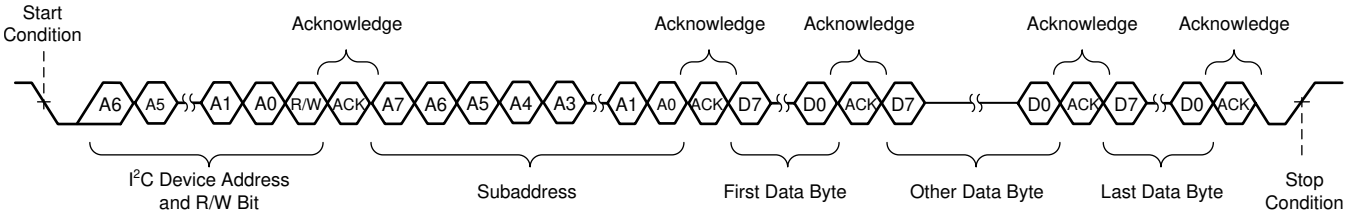

图 100. Sequential Write Transfer

9.5.2.3 Random Read

As shown in 图 101, a single-byte data-read transfer begins with the master device transmitting a start condition followed by the I^{2}C device address and the read/write bit. For the data-read transfer, both a write followed by a read are actually done. Initially, a write is done to transfer the address byte of the internal memory address to be read. As a result, the read/write bit is a 0. After receiving the address and the read/write bit, the device responds with an acknowledge bit. In addition, after sending the internal memory address byte, the master device transmits another start condition followed by the address and the read/write bit again. This time the read/write bit is a 1, indicating a read transfer. After receiving the address and the read/write bit, the device again responds with an acknowledge bit. Next, the device transmits the data byte from the memory address being read. After receiving the data byte, the master device transmits a not-acknowledge followed by a stop condition to complete the single-byte data-read transfer.

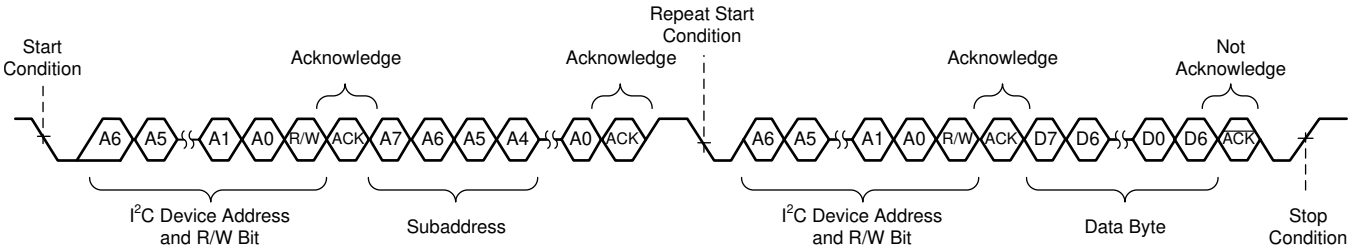

图 101. Random Read Transfer

9.5.2.4 Sequential Read

A sequential data-read transfer is identical to a single-byte data-read transfer except that multiple data bytes are transmitted by the device to the master device as shown in 图 102. Except for the last data byte, the master device responds with an acknowledge bit after receiving each data byte and automatically increments the I^{2}C sub address by one. After receiving the last data byte, the master device transmits a not-acknowledge followed by a stop condition to complete the transfer.

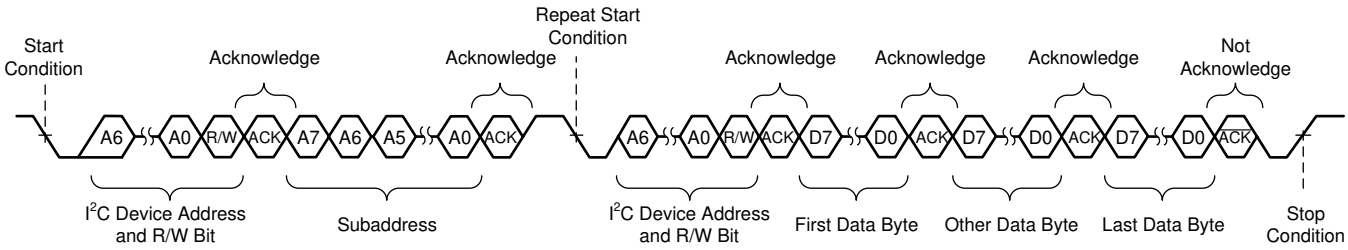

图 102. Sequential Read Transfer

9.5.2.5 DSP Memory Book, Page and BQ update

On Page 0x00 of each book, Register 0x7f is used to change the book. Register 0x00 of each page is used to change the page. To change a Page first write 0x00 to Register 0x00 to switch to Page 0 then write the book number to Register 0x7f on Page 0. To switch between pages in a book, simply write the page number to register 0x00.

All the Biquad Filters coefficients are addressed in book 0xAA. The five coefficients of every Biquad Filter should be written entirely and sequentially from the lowest address to the highest address. The address of all Biquad Filters can be found in Register Maps

All DSP/Audio Process Flow Related Register are listed in Application Note, TAS5825P Process Flows

9.5.2.6 Checksum

This device supports two different check sum schemes, a cyclic redundancy check (CRC) checksum and an Exclusive (XOR) checksum. Register reads do not change checksum, but writes to even nonexistent registers changes the checksum. Both checksums are 8-bit checksums and both are available together simultaneously. The checksums can be reset by writing a starting value (eg. 0x 00 00 00 00) to their respective 4-byte register locations.

9.5.2.6.1 Cyclic Redundancy Check (CRC) Checksum

The 8-bit CRC checksum used is the 0x7 polynomial (CRC-8-CCITT I.432.1; ATM HEC, ISDN HEC and cell delineation, (1 + x1 + x2 + x8)). A major advantage of the CRC checksum is that it is input order sensitive. The CRC supports all I^2C transactions, excluding book and page switching. The CRC checksum is read from register 0x7E on page0 of any book (B_x, Page_0, Reg_126). The CRC checksum can be reset by writing 0x00 to the same register locations where the CRC checksum is valid.

9.5.2.6.2 Exclusive or (XOR) Checksum

The Xor checksum is a simpler checksum scheme. It performs sequential XOR of each register byte write with the previous 8-bit checksum register value. XOR supports only Book 0x8C, and excludes page switching and all registers in Page 0x00 of Book 0x8C. XOR checksum is read from location register 0x7D on page 0x00 of book 0x8C (B_140, Page_0, Reg_125). The XOR Checksum can be reset by writing 0x00 to the same register location where it is read.

版权 © 2019, Texas Instruments Incorporated

9.5.3 Control via Software

- Startup Procedures
- Shutdown Procedures

9.5.3.1 Startup Procedures

1. Configure ADR pin with proper setting for I^2C device address.
2. Bring up power supplies (it does not matter if PVDD or DVDD comes up first).
3. Once power supplies are stable, bring up $\overline{PDN}$ to High, then start SCLK, LRCLK.
4. Once I^2S clock are stable, set the device into HiZ state and enable DSP via the I2C control port.
5. Wait 5 ms at least. Then initialize the DSP Coefficient, and set the device to Play state
6. The device is now in normal operation.

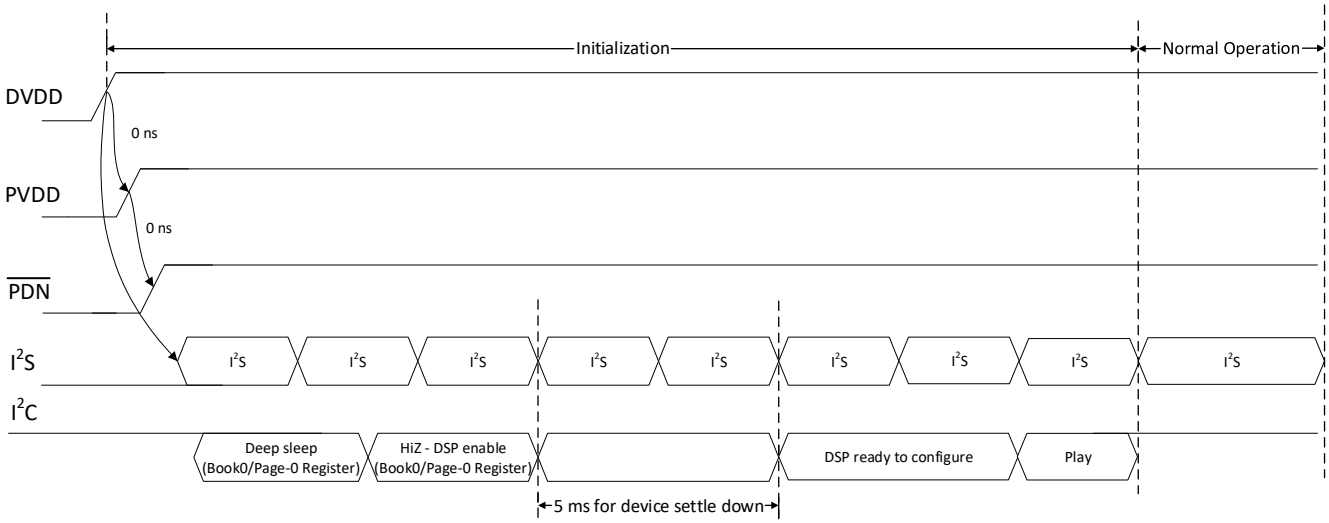

(1) I^2S only permits to start after DVDD fully powered up. But No sequence requirement with PDN.

A. I^2C only response with PDN brought up to HIGH.

B. If I^2C register is general register in Book 0, no sequence requirement, write/read BEFORE or AFTER I2S clock ready. But if I^2C register is DSP register (Other BOOK/PAGE), suggest to follow the 5ms requirements and make sure I^2S clock is ready (Especially for the first time initialization after power up).

C. No sequence requirement for PVDD and DVDD.

图 103. Start-up Sequence

9.5.3.2 Shutdown Procedures

1. The device is in normal operation.
2. Configure the Register 0x03h -D[1:0]=10 (Hiz) via the I^2C control port or Pull $\overline{PDN}$ low.
3. Wait at least 6ms (this time depends on the LRCLK rate ,digital volume and digital volume ramp down rate).
4. Bring down power supplies.
5. The device is now fully shutdown and powered off.

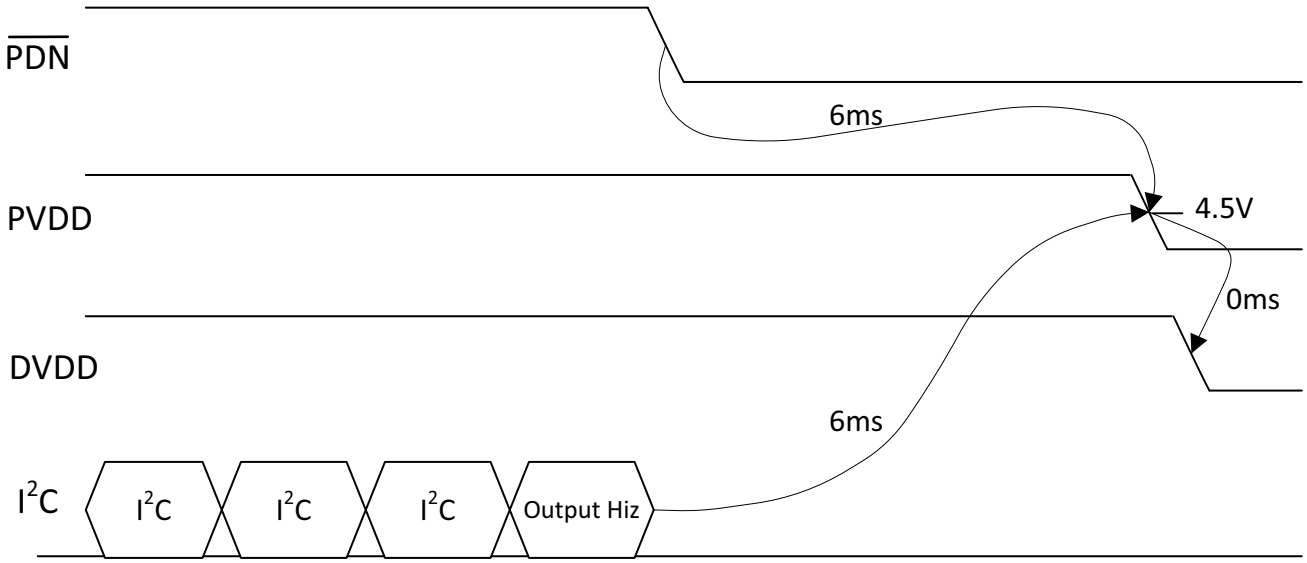

A. Before PVDD/DVDD power down, Class D Output driver needs to be disabled by PDN or by I^2C

B. At least 6 ms delay needed based on LRCLK (Fs) = 48 kHz, Digital volume ramp down update every sample period, decreased by 0.5 dB for each update, digital volume = 24 dB. Change the value of register 0x4C and 0x4E or change the LRCLK rate, the delay changes.

图 104. Power-Down Sequence

版权 © 2019, Texas Instruments Incorporated

9.5.3.3 Protection and Monitoring

9.5.3.3.1 Overcurrent Limit (Cycle-By-Cycle)

The CBC current-limiting circuit terminates each PWM pulse limit the output current flow to the average current limit (I_{LIM}) threshold. The overall effect on the audio in the case of a current overload is quite similar a voltage-clipping event, temporarily limiting power at the peaks of the music signal and normal operation continues without disruption on removal of the overload.

注

CBC (Cycle-By-Cycle) current-limiting only allows in BTL mode, not allowed under PBTL.

9.5.3.3.2 Overcurrent Shutdown (OCSD)

Under severe short-circuit event, such as a short to PVDD or ground, the device uses a peak-current detector, and the affected channel shuts down in < 100 ns if the peak current are enough. The shutdown speed depends on a number of factors, such as the impedance of the short circuit, supply voltage, and switching frequency. The user may restart the affected channel via I^2C. An OCSD event activates the fault pin, and the I^2 fault register saves a record. If the supply or ground short is strong enough to exceed the peak current threshold but not severe enough to trigger the OSCD, the peak current limiter prevents excess current from damaging the output FETs, and operation returns to normal after the short is removed.

9.5.3.3.3 DC Detect

If the TAS5825P device measures a DC offset in the output voltage, the FAULTZ line is pulled low and the OUTxx outputs transition to high impedance, signifying a fault.

9.6 Register Maps

9.6.1 CONTROL PORT Registers

Table 6 lists the memory-mapped registers for the CONTROL PORT. All register offset addresses not listed in Table 6 should be considered as reserved locations and the register contents should not be modified.

Table 6. CONTROL PORT Registers

Offset	Acronym	Register Name	Section
1h	RESET_CTRL	Register 1	Go
2h	DEVICE_CTRL_1	Register 2	Go
3h	DEVICE_CTRL2	Register 3	Go
Fh	I2C_PAGE_AUTO_INC	Register 15	Go
28h	SIG_CH_CTRL	Register 40	Go
29h	CLOCK_DET_CTRL	Register 41	Go
30h	SDOUT_SEL	Register 48	Go
31h	I2S_CTRL	Register 49	Go
33h	SAP_CTRL1	Register 51	Go
34h	SAP_CTRL2	Register 52	Go
37h	FS_MON	Register 55	Go
38h	BCK (SCLK)_MON	Register 56	Go
39h	CLKDET_STATUS	Register 57	Go
40h	DSP_PGM_MODE	Register 64	Go
46h	DSP_CTRL	Register 70	Go
4Ch	DIG_VOL	Register 76	Go
4Eh	DIG_VOL_CTRL1	Register 78	Go
4Fh	DIG_VOL_CTRL2	Register 79	Go
50h	AUTO_MUTE_CTRL	Register 80	Go
51h	AUTO_MUTE_TIME	Register 81	Go
53h	ANA_CTRL	Register 83	Go
54h	AGAIN	Register 84	Go
55h	SPI_CLK	Register 85	Go
56h	EEPROM_CTRL0	Register 86	Go
57h	EEPROM_RD_CMD	Register 87	Go
58h	EEPROM_ADDR_START0	Register 88	Go
59h	EEPROM_ADDR_START1	Register 89	Go
5Ah	EEPROM_ADDR_START2	Register 90	Go
5Bh	EEPROM_BOOT_STATUS	Register 91	Go
5Ch	BQ_WR_CTRL1	Register 92	Go
5Eh	PVDD_ADC	Register 94	Go
60h	GPIO_CTRL	Register 96	Go
61h	GPIO0_SEL	Register 97	Go
62h	GPIO1_SEL	Register 98	Go
63h	GPIO2_SEL	Register 99	Go
64h	GPIO_INPUT_SEL	Register 100	Go
65h	GPIO_OUT	Register 101	Go
66h	GPIO_OUT_INV	Register 102	Go
67h	DIE_ID	Register 103	Go
68h	POWER_STATE	Register 104	Go
69h	AUTOMUTE_STATE	Register 105	Go
6Ah	PHASE_CTRL	Register 106	Go

Copyright © 2019, Texas Instruments Incorporated

Table 6. CONTROL PORT Registers (continued)

Offset	Acronym	Register Name	Section
6Bh	SS_CTRL0	Register 107	Go
6Ch	SS_CTRL1	Register 108	Go
6Dh	SS_CTRL2	Register 109	Go
6Eh	SS_CTRL3	Register 110	Go
6Fh	SS_CTRL4	Register 111	Go
70h	CHAN_FAULT	Register 112	Go
71h	GLOBAL_FAULT1	Register 113	Go
72h	GLOBAL_FAULT2	Register 114	Go
73h	WARNING	Register 115	Go
74h	PIN_CONTROL1	Register 116	Go
75h	PIN_CONTROL2	Register 117	Go
76h	MISC_CONTROL	Register 118	Go
77h	CBC_CONTROL	Register 119	Go
78h	FAULT_CLEAR	Register 120	Go

Complex bit access types are encoded to fit into small table cells. Table 7 shows the codes that are used for access types in this section.

Table 7. CONTROL PORT Access Type Codes

Access Type	Code	Description
Read Type		
R	R	Read
Write Type		
W	W	Write
Reset or Default Value		
-n		Value after reset or the default value

9.6.1.1 RESET_CTRL Register (Offset = 1h) [reset = 0x00]

RESET_CTRL is shown in Figure 105 and described in Table 8.

Return to Summary Table.

Figure 105. RESET_CTRL Register

7	6	5	4	3	2	1	0
RESERVED			RST_MOD	RESERVED			RST_REG
R/W			W	R			W

Table 8. RESET_CTRL Register Field Descriptions

Bit	Field	Type	Reset	Description
7-5	RESERVED	R/W	000	This bit is reserved
4	RST_DIG_CORE	W	0	WRITE CLEAR BIT Reset DIG_CORE WRITE CLEAR BIT Reset Full Digital Core. This bit resets the Full Digital Signal Path (Include DSP coefficient RAM and I2C Control Port Registers), Since the DSP is also reset, the coeffient RAM content will also be cleared by the DSP. 0: Normal 1: Reset Full Digital Signal Path
3-1	RESERVED	R	000	This bit is reserved
0	RST_REG	W	0	WRITE CLEAR BIT Reset Registers This bit resets the mode registers back to their initial values. Only reset Control Port Registers, The RAM content is not cleared. 0: Normal 1: Reset I^2C Control Port Registers

Copyright © 2019, Texas Instruments Incorporated

9.6.1.2 DEVICE_CTRL_1 Register (Offset = 2h) [reset = 0x00]

DEVICE_CTRL_1 is shown in Figure 106 and described in Table 9.

Return to Summary Table.

Figure 106. DEVICE_CTRL_1 Register

7	6	5	4	3	2	1	0
RESERVED	FSW_SEL			RESERVED	DAMP_PBTL	DAMP_MOD	
R/W	R/W			R/W	R/W	R/W	

Table 9. DEVICE_CTRL_1 Register Field Descriptions

Bit	Field	Type	Reset	Description
7	RESERVED	R/W	0	This bit is reserved
6-4	FSW_SEL	R/W	000	SELECT FSW 000: 384K 010: 480K 011: 576K 100: 768K 001: Reserved 101: Reserved 110: Reserved 111: Reserved
3	RESERVED	R/W	0	This bit is reserved
2	DAMP_PBTL	R/W	0	0: SET DAMP TO BTL MODE 1: SET DAMP TO PBTL MODE
1-0	DAMP_MOD	R/W	00	00: BD MODE 01: 1SPW MODE 10: HYBRID MODE (Need to select supporting process flows in PPC3)

Copyright © 2019, Texas Instruments Incorporated

9.6.1.3 DEVICE_CTRL2 Register (Offset = 3h) [reset = 00x10]

DEVICE_CTRL2 is shown in Figure 107 and described in Table 10.

Return to Summary Table.

Figure 107. DEVICE_CTRL2 Register

7	6	5	4	3	2	1	0
RESERVED			DIS_DSP	MUTE_LEFT	RESERVED	CTRL_STATE	
R/W			R/W	R/W	R/W	R/W	

Table 10. DEVICE_CTRL2 Register Field Descriptions

Bit	Field	Type	Reset	Description
7-5	RESERVED	R/W	000	This bit is reserved
4	DIS_DSP	R/W	1	DSP reset When the bit is made 0, DSP will start powering up and send out data. This needs to be made 0 only after all the input clocks are settled so that DMA channels do not go out of sync. 0: Normal operation 1: Reset the DSP
3	MUTE	R/W	0	Mute both Left and Right Channel This bit issues soft mute request for both left and right channel. The volume will be smoothly ramped down/up to avoid pop/click noise. 0: Normal volume 1: Mute
2	RESERVED	R/W	0	This bit is reserved
1-0	CTRL_STATE	R/W	00	device state control register 00: Deep Sleep 01: Sleep 10: Hiz, 11: PLAY

Copyright © 2019, Texas Instruments Incorporated

9.6.1.4 I2C_PAGE_AUTO_INC Register (Offset = Fh) [reset = 0x00]

I2C_PAGE_AUTO_INC is shown in Figure 108 and described in Table 11.

Return to Summary Table.

Figure 108. I2C_PAGE_AUTO_INC Register

7	6	5	4	3	2	1	0
RESERVED				PAGE_AUTOINC_REG	RESERVED		
R/W				R/W	R/W		

Table 11. I2C_PAGE_AUTO_INC Register Field Descriptions

Bit	Field	Type	Reset	Description
7-4	RESERVED	R/W	0000	This bit is reserved
3	PAGE_AUTOINC_REG	R/W	0	Page auto increment disable Disable page auto increment mode. for non -zero books. When end of page is reached it goes back to 8th address location of next page when this bit is 0. When this bit is 1 it goes to 0 th location of current page itself like in older part. 0: Enable Page auto increment 1: Disable Page auto increment
2-0	RESERVED	R/W	000	This bit is reserved

9.6.1.5 SIG_CH_CTRL Register (Offset = 28h) [reset = 0x00]

SIG_CH_CTRL is shown in Figure 109 and described in Table 12.

Return to Summary Table.

Figure 109. SIG_CH_CTRL Register

7	6	5	4	3	2	1	0
SCLK_RATIO_CONFIGURE				FSMODE	RESERVED		
R/W				R/W	R/W		

Table 12. SIG_CH_CTRL Register Field Descriptions

Bit	Field	Type	Reset	Description
7-4	SCLK_RATIO_CONFIGURE	R/W	0000	These bits indicate the configured SCLK ratio, the number of SCLK clocks in one audio frame. Device will set this ratio automatically. 4'b0011:32FS 4'b0101:64FS 4'b0111:128FS 4'b1001:256FS 4'b1011:512FS
3	FSMODE	R/W	0	FS Speed Mode These bits select the FS operation mode, which must be set according to the current audio sampling rate. Need set it manually If the input Fs is 44.1kHz/88.2kHz/176.4kHz. 4 'b0000 Auto detection 4 'b0100 Reserved 4 'b0110 32KHz 4 'b1000 44.1KHz 4 'b1001 48KHz 4'b1010 88.2KHz 4 'b1011 96KHz 4 'b1100 176.4KHz 4 'b1101 192KHz Others Reserved
2-0	RESERVED	R/W	000	This bit is reserved

Copyright © 2019, Texas Instruments Incorporated

9.6.1.6 CLOCK_DET_CTRL Register (Offset = 29h) [reset = 0x00]

CLOCK_DET_CTRL is shown in Figure 110 and described in Table 13.

Return to Summary Table.

Figure 110. CLOCK_DET_CTRL Register

7	6	5	4	3	2	1	0
RESERVED	DIS_DET_PLL	DIS_DET_SCLK_RANGE	DIS_DET_FS	DIS_DET_SCLK	DIS_DET_MISS	RESERVED	DIS_DET_LOCK
R/W	R/W	R/W	R/W	R/W	R/W	R/W	R/W

Table 13. CLOCK_DET_CTRL Register Field Descriptions

Bit	Field	Type	Reset	Description
7	RESERVED	R/W	0	This bit is reserved
6	DIS_DET_PLL	R/W	0	Ignore PLL overate Detection This bit controls whether to ignore the PLL overrate detection. The PLL must be slow than 150MHz or an error will be reported. When ignored, a PLL overrate error will not cause a clock error. 0: Regard PLL overrate detection 1: Ignore PLL overrate detection
5	DIS_DET_SCLK_RANGE	R/W	0	Ignore BCK Range Detection This bit controls whether to ignore the SCLK range detection. The SCLK must be stable between 256KHz and 50MHz or an error will be reported. When ignored, a SCLK range error will not cause a clock error. 0: Regard BCK Range detection 1: Ignore BCK Range detection
4	DIS_DET_FS	R/W	0	Ignore FS Error Detection This bit controls whether to ignore the FS Error detection. When ignored, FS error will not cause a clock error.But CLKDET_STATUS will report fs error. 0: Regard FS detection 1: Ignore FS detection
3	DIS_DET_SCLK	R/W	0	Ignore SCLK Detection This bit controls whether to ignore the SCLK detection against LRCK. The SCLK must be stable between 32FS and 512FS inclusive or an error will be reported. When ignored, a SCLK error will not cause a clock error. 0: Regard SCLK detection 1: Ignore SCLK detection
2	DIS_DET_MISS	R/W	0	Ignore SCLK Missing Detection This bit controls whether to ignore the SCLK missing detection. When ignored an SCLK missing will not cause a clock error. 0: Regard SCLK missing detection 1: Ignore SCLKmissing detection
1	RESERVED	R/W	0	This bit is reserved
0	DIS_DET_LOCK	R/W	0	This bit is reserved

Copyright © 2019, Texas Instruments Incorporated

9.6.1.7 SDOUT_SEL Register (Offset = 30h) [reset = 0x00]

SDOUT_SEL is shown in Figure 112 and described in Table 14.

Return to Summary Table.

Figure 111. SDOUT_SEL Register

7	6	5	4	3	2	1	0
RESERVED					RESERVED		SDOUT_SEL
R/W					R/W		R/W

Table 14. SDOUT_SEL Register Field Descriptions

Bit	Field	Type	Reset	Description
7-1	RESERVED	R/W	0000000	These bits are reserved
0	SDOUT_SEL	R/W	0	SDOUT Select. This bit selects what is being output as SDOUT pin. 0: SDOUT is the DSP output (post-processing) 1: SDOUT is the DSP input (pre-processing)

9.6.1.8 I2S_CTRL Register (Offset = 31h) [reset = 0x00]

I2S_CTRL is shown in Figure 112 and described in Table 15.

Return to Summary Table.

Figure 112. I2S_CTRL Register

7	6	5	4	3	2	1	0
RESERVED		SCLK_INV	RESERVED	RESERVED	RESERVED		RESERVED
R/W		R/W	R/W	R	R		R/W

Table 15. I2S_CTRL Register Field Descriptions

Bit	Field	Type	Reset	Description
7-6	RESERVED	R/W	00	This bit is reserved
5	SCLK_INV	R/W	0	SCLK Polarity This bit sets the inverted SCLK mode. In inverted SCLK mode, the DAC assumes that the LRCK and DIN edges are aligned to the rising edge of the SCLK. Normally they are assumed to be aligned to the falling edge of theSCLK 0: Normal SCLKmode 1: Inverted SCLK mode
4	RESERVED	R/W	0	This bit is reserved
3	RESERVED	R	0	This bit is reserved
2-1	RESERVED	R/W	00	This bit is reserved
0	RESERVED	R/W	0	This bit is reserved

Copyright © 2019, Texas Instruments Incorporated

9.6.1.9 SAP_CTRL1 Register (Offset = 33h) [reset = 0x02]

SAP_CTRL1 is shown in Figure 113 and described in Table 16.

Return to Summary Table.

Figure 113. SAP_CTRL1 Register

7	6	5	4	3	2	1	0
I2S_SHIFT_MSB	RESERVED	DATA_FORMAT		I2S_LRCLK_PULSE		WORD_LENGTH	
R/W	R/W	R/W		R/W		R/W	

Table 16. SAP_CTRL1 Register Field Descriptions

Bit	Field	Type	Reset	Description
7	I2S_SHIFT_MSB	R/W	0	I2S Shift MSB
6	RESERVED	R/W	0	This bit is reserved
5-4	DATA_FORMAT	R/W	00	I2S Data Format These bits control both input and output audio interface formats for DAC operation. 00: I2S 01: TDM/DSP 10: RTJ 11: LTJ
3-2	I2S_LRCLK_PULSE	R/W	00	01: lrclk pulse < 8 SCLK
1-0	WORD_LENGTH	R/W	10	I2S Word Length These bits control both input and output audio interface sample word lengths for DAC operation. 00: 16 bits 01: 20 bits 10: 24 bits 11: 32 bits

9.6.1.10 SAP_CTRL2 Register (Offset = 34h) [reset = 0x00]

SAP_CTRL2 is shown in Figure 114 and described in Table 17.

Return to Summary Table.

Figure 114. SAP_CTRL2 Register

7	6	5	4	3	2	1	0
I2S_SHIFT							
R/W							

Table 17. SAP_CTRL2 Register Field Descriptions

Bit	Field	Type	Reset	Description
7-0	I2S_SHIFT	R/W	00000000	I2S Shift LSB These bits control the offset of audio data in the audio frame for both input and output. The offset is defined as the number of SCLK from the starting (MSB) of audio frame to the starting of the desired audio sample. 000000000: offset = 0 SCLK (no offset) 000000001: ofsset = 1 SCLK 000000010: offset = 2 SCLKs and 111111111: offset = 512 SCLKs

Copyright © 2019, Texas Instruments Incorporated

9.6.1.11 FS_MON Register (Offset = 37h) [reset = 0x00]

FS_MON is shown in Figure 115 and described in Table 18.

Return to Summary Table.

Figure 115. FS_MON Register

7	6	5	4	3	2	1	0
RESERVED		SCLK_RATIO_HIGH		FS			
R/W		R		R			

Table 18. FS_MON Register Field Descriptions

Bit	Field	Type	Reset	Description
7-6	RESERVED	R/W	00	This bit is reserved
5-4	SCLK_RATIO_HIGH	R	00	2 msbs of detected SCLK ratio
3-0	FS	R	0000	These bits indicate the currently detected audio sampling rate. 4 'b0000 FS Error 4 'b0100 16KHz 4 'b0110 32KHz 4 'b1000 Reserved 4 'b1001 48KHz 4 'b1011 96KHz 4 'b1101 192KHz Others Reserved

9.6.1.12 BCK (SCLK)_MON Register (Offset = 38h) [reset = 0x00]

BCK_MON is shown in Figure 116 and described in Table 19.

Return to Summary Table.

Figure 116. BCK (SCLK)_MON Register

7	6	5	4	3	2	1	0
BCLK (SCLK)_RATIO_LOW							
R							

Table 19. BCK_MON Register Field Descriptions

Bit	Field	Type	Reset	Description
7-0	BCLK (SCLK)_RATIO_LOW	R	00000000	These bits indicate the currently detected BCK (SCLK) ratio, the number of BCK (SCLK) clocks in one audio frame. BCK (SCLK) = 32 FS~512 FS

9.6.1.13 CLKDET_STATUS Register (Offset = 39h) [reset = 0x00]

CLKDET_STATUS is shown in Figure 117 and described in Table 20.

Return to Summary Table.

Figure 117. CLKDET_STATUS Register

7	6	5	4	3	2	1	0
RESERVED		DET_STATUS					
R/W		R					

Table 20. CLKDET_STATUS Register Field Descriptions

Bit	Field	Type	Reset	Description
7-6	RESERVED	R/W	00	This bit is reserved
5-0	DET_STATUS	R	000000	bit0: In auto detection mode(reg_fsmode=0),this bit indicated whether the audio sampling rate is valid or not. In non auto detection mode(reg_fsmode!=0), Fs error indicates that configured fs is different with detected fs. Even FS Error Detection Ignore is set, this flag will be also asserted. bit1: This bit indicates whether the SCLK is valid or not. The SCLK ratio must be stable and in the range of 32-512FS to be valid. bit2: This bit indicates whether the SCLK is missing or not. bit3:This bit indicates whether the PLL is locked or not. The PLL will be reported as unlocked when it is disabled. bits4:This bit indicates whether the PLL is overrate bits5:This bit indicates whether the SCLK is overrate or underrate

Copyright © 2019, Texas Instruments Incorporated

9.6.1.14 DSP_PGM_MODE Register (Offset = 40h) [reset = 0x01]

DSP_PGM_MODE is shown in Figure 118 and described in Table 21.

Return to Summary Table.

Figure 118. DSP_PGM_MODE Register

7	6	5	4	3	2	1	0
RESERVED				CH_A_HIZ	CH_B_HIZ	MODE_SEL	
R/W				R/W	R/W	R/W	

Table 21. DSP_PGM_MODE Register Field Descriptions

Bit	Field	Type	Reset	Description
7-4	RESERVED	R/W	0000	These bits are reserved
3	CH_A_HIZ	R/W	0	1: Force Channel A (L channel) to Hiz mode. 0: Exit Force Hi-Z mode, Channel A is now controlled by Register 0x03, see Table 10. Notes: If channel has been forced to Hiz, only method to exit Force Hi-Z mode is set this bit to 0. This function is disabled in PBTL mode.
2	CH_B_HIZ	R/W	0	1: Force Channel B (R channel) to Hiz mode. 0: Exit Force Hi-Z mode, Channel B is now controlled by Register 0x03, see Table 10. Notes: If channel has been forced to Hiz, only method to exit Force Hi-Z mode is set this bit to 0. This function is disabled in PBTL mode.
1-0	MODE_SEL	R/W	01	DSP Program Selection These bits select the DSP program to use for audio processing. 00 => ram mode 01 => rom mode 1 10 => rom mode 2 11 => rom mode 3

9.6.1.15 DSP_CTRL Register (Offset = 46h) [reset = 0x01]

DSP_CTRL is shown in Figure 119 and described in Table 22.

Return to Summary Table.

Figure 119. DSP_CTRL Register

7	6	5	4	3	2	1	0
RESERVED			USER_DEFINED_PROCESSING_RATE		RESERVED	BOOT_FROM_IRAM	USE_DEFAULT_COEFFS
R/W			R/W		R	R/W	R/W

Table 22. DSP_CTRL Register Field Descriptions

Bit	Field	Type	Reset	Description
7-5	RESERVED	R/W	000	This bit is reserved
4-3	USER_DEFINED_PROCESSING_RATE	R/W	00	00:input 01:48k 10:96k 11:192k
2	RESERVED	R	0	This bit is reserved
1	RESERVED	R	0	This bit is reserved
0	USE_DEFAULT_COEFFS	R/W	1	Use default coefficients from ZROM this bit controls whether to use default coefficients from ZROM or use the non-default coefficients downloaded to device by the Host 0 : don't use default coefficients from ZROM 1 : use default coefficents from ZROM

Copyright © 2019, Texas Instruments Incorporated

9.6.1.16 DIG_VOL Register (Offset = 4Ch) [reset = 30h]

DIG_VOL is shown in Figure 120 and described in Table 23.

Return to Summary Table.

Figure 120. DIG_VOL Register

7	6	5	4	3	2	1	0
PGA_LEFT							
R/W							

Table 23. DIG_VOL Register Field Descriptions

Bit	Field	Type	Reset	Description
7-0	PGA	R/W	00110000	Digital Volume These bits control both left and right channel digital volume. The digital volume is 24 dB to -103 dB in -0.5 dB step. 00000000: +24.0 dB 00000001: +23.5 dB ..... and 00101111: +0.5 dB 00110000: 0.0 dB 00110001: -0.5 dB ..... 11111110: -103 dB 11111111: Mute

Copyright © 2019, Texas Instruments Incorporated

9.6.1.17 DIG_VOL_CTRL1 Register (Offset = 4Eh) [reset = 0x33]

DIG_VOL_CTRL1 is shown in Figure 121 and described in Table 24.

Return to Summary Table.

Figure 121. DIG_VOL_CTRL1 Register

7	6	5	4	3	2	1	0
PGA_RAMP_DOWN_SPEED		PGA_RAMP_DOWN_STEP		PGA_RAMP_UP_SPEED		PGA_RAMP_UP_STEP	
R/W		R/W		R/W		R/W	

Table 24. DIG_VOL_CTRL1 Register Field Descriptions

Bit	Field	Type	Reset	Description
7-6	PGA_RAMP_DOWN_SPEED	R/W	00	Digital Volume Normal Ramp Down Frequency These bits control the frequency of the digital volume updates when the volume is ramping down. 00: Update every 1 FS period 01: Update every 2 FS periods 10: Update every 4 FS periods 11: Directly set the volume to zero (Instant mute)
5-4	PGA_RAMP_DOWN_STEP	R/W	11	Digital Volume Normal Ramp Down Step These bits control the step of the digital volume updates when the volume is ramping down. 00: Decrement by 4 dB for each update 01: Decrement by 2 dB for each update 10: Decrement by 1 dB for each update 11: Decrement by 0.5 dB for each update
3-2	PGA_RAMP_UP_SPEED	R/W	00	Digital Volume Normal Ramp Up Frequency These bits control the frequency of the digital volume updates when the volume is ramping up. 00: Update every 1 FS period 01: Update every 2 FS periods 10: Update every 4 FS periods 11: Directly restore the volume (Instant unmute)
1-0	PGA_RAMP_UP_STEP	R/W	11	Digital Volume Normal Ramp Up Step These bits control the step of the digital volume updates when the volume is ramping up. 00: Increment by 4 dB for each updat e 01: Increment by 2 dB for each update 10: Increment by 1 dB for each update 11: Increment by 0.5 dB for each update

Copyright © 2019, Texas Instruments Incorporated

9.6.1.18 DIG_VOL_CTRL2 Register (Offset = 4Fh) [reset = 0x30]

DIG_VOL_CTRL2 is shown in Figure 122 and described in Table 25.

Return to Summary Table.

Figure 122. DIG_VOL_CTRL2 Register

7	6	5	4	3	2	1	0
FAST_RAMP_DOWN_SPEED		FAST_RAMP_DOWN_STEP		RESERVED			
R/W		R/W		R/W			

Table 25. DIG_VOL_CTRL2 Register Field Descriptions

Bit	Field	Type	Reset	Description
7-6	FAST_RAMP_DOWN_SPEED	R/W	00	Digital Volume Emergency Ramp Down Frequency These bits control the frequency of the digital volume updates when the volume is ramping down due to clock error or power outage, which usually needs faster ramp down compared to normal soft mute. 00: Update every 1 FS period 01: Update every 2 FS periods 10: Update every 4 FS periods 11: Directly set the volume to zero (Instant mute)
5-4	FAST_RAMP_DOWN_STEP	R/W	11	Digital Volume Emergency Ramp Down Step These bits control the step of the digital volume updates when the volume is ramping down due to clock error or power outage, which usually needs faster ramp down compared to normal soft mute. 00: Decrement by 4 dB for each update 01: Decrement by 2 dB for each update 10: Decrement by 1 dB for each update 11: Decrement by 0.5 dB for each update
3-0	RESERVED	R/W	0000	This bit is reserved

9.6.1.19 AUTO_MUTE_CTRL Register (Offset = 50h) [reset = 0x07]

AUTO_MUTE_CTRL is shown in Figure 123 and described in Table 26.

Return to Summary Table.

Figure 123. AUTO_MUTE_CTRL Register

7	6	5	4	3	2	1	0
RESERVED					REG_AUTO_MUTE_CTRL		
R/W					R/W		

Table 26. AUTO_MUTE_CTRL Register Field Descriptions

Bit	Field	Type	Reset	Description
7-3	RESERVED	R/W	00000	This bit is reserved
2-0	REG_AUTO_MUTE_CTRL	R/W	111	bit0: 0: Disable left channel auto mute 1: Enable left channel auto mute bit1: 0: Disable right channel auto mute 1: Enable right channel auto mute bit2: 0: Auto mute left channel and right channel independently. 1: Auto mute left and right channels only when both channels are about to be auto muted.

Copyright © 2019, Texas Instruments Incorporated

9.6.1.20 AUTO_MUTE_TIME Register (Offset = 51h) [reset = 0x00]

AUTO_MUTE_TIME is shown in Figure 124 and described in Table 27.

Return to Summary Table.

Figure 124. AUTO_MUTE_TIME Register

7	6	5	4	3	2	1	0
RESERVED	AUTOMUTE_TIME_LEFT			RESERVED	AUTOMUTE_TIME_RIGHT		
R/W	R/W			R/W	R/W		

Table 27. AUTO_MUTE_TIME Register Field Descriptions

Bit	Field	Type	Reset	Description
7	RESERVED	R/W	0	This bit is reserved
6-4	AUTOMUTE_TIME_LEFT	R/W	000	Auto Mute Time for Left Channel These bits specify the length of consecutive zero samples at left channel before the channel can be auto muted. The times shown are for 96 kHz sampling rate and will scale with other rates. 000: 11.5 ms 001: 53 ms 010: 106.5 ms 011: 266.5 ms 100: 0.535 sec 101: 1.065 sec 110: 2.665 sec 111: 5.33 sec
3	RESERVED	R/W	0	This bit is reserved
2-0	AUTOMUTE_TIME_RIGHT	R/W	000	Auto Mute Time for Right Channel These bits specify the length of consecutive zero samples at right channel before the channel can be auto muted. The times shown are for 96 kHz sampling rate and will scale with other rates. 000: 11.5 ms 001: 53 ms 010: 106.5 ms 011: 266.5 ms 100: 0.535 sec 101: 1.065 sec 110: 2.665 sec 111: 5.33 sec

Copyright © 2019, Texas Instruments Incorporated

9.6.1.21 ANA_CTRL Register (Offset = 53h) [reset = 0h]

ANA_CTRL is shown inFigure 125 and described in Table 28

Return to Summary Table

Figure 125. ANA_CTRL Register

7	6	5	4	3	2	1	0
AMUTE_DLY							
R/W							

Table 28. ANA_CTRL Register Field Descriptions

Bit	Field	Type	Reset	Description
7	RESERVED	R/W	0	This bit is reserved
6-5	Class D bandwidth control	R/W	00	00: 100kHz 01: 80kHz 10: 120kHz 11:175kHz With Fsw=384kHz, 100kHz bandwidth is selected for high audio performance. With Fsw=768kHz, 175kHz bandwidth should be selected for high audio performance.
4-1	RESERVED	R/W	0000	These bits are reserved
0	L and R PWM output phase control	R/W	0	0: out of phase 1: in phase

Copyright © 2019, Texas Instruments Incorporated

9.6.1.22 AGAIN Register (Offset = 54h) [reset = 0x00]

AGAIN is shown in Figure 126 and described in Table 29.

Return to Summary Table.

Figure 126. AGAIN Register

7	6	5	4	3	2	1	0
RESERVED			ANA_GAIN				
R/W			R/W				

Table 29. AGAIN Register Field Descriptions

Bit	Field	Type	Reset	Description
7-5	RESERVED	R/W	000	This bit is reserved
4-0	ANA_GAIN	R/W	00000	Analog Gain Control This bit controls the analog gain. 00000: 0 dB (29.5V peak voltage) 00001: -0.5db ... 11111: -15.5 dB

9.6.1.23 SPI_CLK Register (Offset = 55h) [reset = 0x00]

SPI_CLK is shown in Figure 127 and described in Table 30.

Return to Summary Table.

Figure 127. SPI_CLK Register

7	6	5	4	3	2	1	0
RESERVED				SPI_CLK_SEL			
R/W				R/W			

Table 30. SPI_CLK Register Field Descriptions

Bit	Field	Type	Reset	Description
7-4	RESERVED	R/W	0000	This bit is reserved
3-0	SPI_CLK_SEL	R/W	0000	00: 1.25M 01: 2.5M 10: 5M 11: 10M

Copyright © 2019, Texas Instruments Incorporated

9.6.1.24 EEPROM_CTRL0 Register (Offset = 56h) [reset = 0x00]

EEPROM_CTRL0 is shown in Figure 128 and described in Table 31.

Return to Summary Table.

Figure 128. EEPROM_CTRL0 Register

7	6	5	4	3	2	1	0
RESERVED		EEPROM_ADDR_24BITS_ENABLE	SPI_CLK_RATE		SPI_INV_POLAR	SPI_MST_LSB	LOAD_EEPROM_START
R/W		R/W	R/W		R/W	R/W	R/W

Table 31. EEPROM_CTRL0 Register Field Descriptions

Bit	Field	Type	Reset	Description
7-6	RESERVED	R/W	00	This bit is reserved
5	EEPROM_ADDR_24BITS_ENABLE	R/W	0	enable 24 bits mode for EEPROM address
4-3	SPI_CLK_RATE	R/W	00	0: spi clock rate = 1.25MHz 1: spi clock rate = 2.5MHz 2: spi clock rate = 5MHz 3: spi clock rate = 10MHz
2	SPI_INV_POLAR	R/W	0	0: spi serial data change at post edge SCK 1: spi serial data change at neg edge SCK
1	SPI_MST_LSB	R/W	0	0: msb first 1: lsb first
0	LOAD_EEPROM_START	R/W	0	0: dsp coefficients read from host 1: dsp coefficients read from EEPROM

9.6.1.25 EEPROM_RD_CMD Register (Offset = 57h) [reset = 0x03]

EEPROM_RD_CMD is shown in Figure 129 and described in Table 32.

Return to Summary Table.

Figure 129. EEPROM_RD_CMD Register

7	6	5	4	3	2	1	0
EEPROM_RD_CMD							
R/W-00000011							

Table 32. EEPROM_RD_CMD Register Field Descriptions

Bit	Field	Type	Reset	Description
7-0	EEPROM_RD_CMD	R/W	00000011	EEPROM read command

Copyright © 2019, Texas Instruments Incorporated

9.6.1.26 EEPROM_ADDR_START0 Register (Offset = 58h) [reset = 0x00]

EEPROM_ADDR_START0 is shown in Figure 130 and described in Table 33.

Return to Summary Table.

Figure 130. EEPROM_ADDR_START0 Register

7	6	5	4	3	2	1	0
EEPROM_ADDR_START_HIGH							
R/W							

Table 33. EEPROM_ADDR_START0 Register Field Descriptions

Bit	Field	Type	Reset	Description
7-0	EEPROM_ADDR_START_HIGH	R/W	00000000	8 msb of EEPROM read starting address for coefficient

9.6.1.27 EEPROM_ADDR_START1 Register (Offset = 59h) [reset = 0x00]

EEPROM_ADDR_START1 is shown in Figure 131 and described in Table 34.

Return to Summary Table.

Figure 131. EEPROM_ADDR_START1 Register

7	6	5	4	3	2	1	0
EEPROM_ADDR_START_MIDDLE							
R/W							

Table 34. EEPROM_ADDR_START1 Register Field Descriptions

Bit	Field	Type	Reset	Description
7-0	EEPROM_ADDR_START_MIDDLE	R/W	00000000	8 middle of EEPROM read starting address for coefficients

9.6.1.28 EEPROM_ADDR_START2 Register (Offset = 5Ah) [reset = 0h]

EEPROM_ADDR_START2 is shown in Figure 132 and described in Table 35.

Return to Summary Table.

Figure 132. EEPROM_ADDR_START2 Register

7	6	5	4	3	2	1	0
EEPROM_ADDR_START_LOW							
R/W							

Table 35. EEPROM_ADDR_START2 Register Field Descriptions

Bit	Field	Type	Reset	Description
7-0	EEPROM_ADDR_START_LOW	R/W	00000000	8 lsb of EEPROM read starting address for coefficients

Copyright © 2019, Texas Instruments Incorporated

9.6.1.29 EEPROM_BOOT_STATUS Register (Offset = 5Bh) [reset = 0x00]

EEPROM_BOOT_STATUS is shown in Figure 133 and described in Table 36.

Return to Summary Table.

Figure 133. EEPROM_BOOT_STATUS Register

7	6	5	4	3	2	1	0
RESERVED						LOAD_EEPROM_CRC_ERROR	LOAD_EEPROM_DONE
R						R	R

Table 36. EEPROM_BOOT_STATUS Register Field Descriptions

Bit	Field	Type	Reset	Description
7-2	RESERVED	R	000000	This bit is reserved
1	LOAD_EEPROM_CRC_ERROR	R	0	0: CRC pass for EEPROM boot load 1: CRC don't passs for EEPROM boot load.
0	LOAD_EEPROM_DONE	R	0	Indicate that the EEPROM boot load has been finished.

9.6.1.30 BQ_WR_CTRL1 Register (Offset = 5Ch) [reset = 0x000]

BQ_WR_CTRL1 is shown in Figure 134 and described in Table 37.

Return to Summary Table.

Figure 134. BQ_WR_CTRL1 Register

7	6	5	4	3	2	1	0
RESERVED							BQ_WR_FIRST_COEF
R/W							R/W

Table 37. BQ_WR_CTRL1 Register Field Descriptions

Bit	Field	Type	Reset	Description
7-1	RESERVED	R/W	0000000	This bit is reserved
0	BQ_WR_FIRST_COEF	R/W	0	Indicate the first coefficient of a BQ is starting to write.

9.6.1.31 PVDD_ADC Register (Offset = 5Eh) [reset = 0h]

PVDD_ADC is shown in Figure 135 and described in Table 38.

Return to Summary Table.

Figure 135. PVDD_ADC Register

7	6	5	4	3	2	1	0
ADC_DATA_OUT							
R							

Copyright © 2019, Texas Instruments Incorporated

Table 38. PVDD_ADC Register Field Descriptions

Bit	Field	Type	Reset	Description
7-0	PVDD_ADC[7:0]	R	00000000	PVDD Voltage = PVDD_ADC[7:0] / 8.428 (V) 223: 26.45V 222: 26.34V 221:26.22V ... 39: 4.63V 38: 4.51V 37: 4.39V

9.6.1.32 GPIO_CTRL Register (Offset = 60h) [reset = 0x00]

GPIO_CTRL is shown in Figure 136 and described in Table 39.

Return to Summary Table.

Figure 136. GPIO_CTRL Register

7	6	5	4	3	2	1	0
RESERVED					GPIO2_OE	GPIO1_OE	GPIO0_OE
R/W					R/W	R/W	R/W

Table 39. GPIO_CTRL Register Field Descriptions

Bit	Field	Type	Reset	Description
7-3	RESERVED	R/W	0000	This bit is reserved
2	GPIO2_OE	R/W	0	GPIO2 Output Enable This bit sets the direction of the GPIO2 pin 0: GPIO2 is input 1: GPIO2 is output
1	GPIO1_OE	R/W	0	GPIO1 Output Enable This bit sets the direction of the GPIO1 pin 0: GPIO1 is input 1: GPIO1 is output
0	GPIO0_OE	R/W	0	GPIO0 Output Enable This bit sets the direction of the GPIO0 pin 0: GPIO0 is input 1: GPIO0 is output

Copyright © 2019, Texas Instruments Incorporated

9.6.1.33 GPIO0_SEL Register (Offset = 61h) [reset = 0x00]

GPIO0_SEL is shown in Figure 137 and described in Table 40.

Return to Summary Table.

Figure 137. GPIO0_SEL Register

7	6	5	4	3	2	1	0
RESERVED				GPIO0_SEL			
R/W				R/W			

Table 40. GPIO0_SEL Register Field Descriptions

Bit	Field	Type	Reset	Description
7-4	RESERVED	R/W	0000	This bit is reserved
3-0	GPIO0_SEL	R/W	0000	0000: off (low) 0001: Hybrid-Pro two level classG waveform control output 0010: Register GPIO0 output 0011: Auto mute flag (asserted when both L and R channels are auto muted) 0100: Auto mute flag for left channel 0101: Auto mute flag for right channel 0110: Clock invalid flag (clock error or clock missing) 0111: Reserved 1000: GPIO0 as WARNZ output 1001: Hybrid-Pro multi-level classH control waveform output 1011: GPIO0 as FAULTZ output 1100: GPIO0 as SPI CLK 1101: GPIO0 as SPI_MOSI 1110: Reserved 1111: Reserved

9.6.1.34 GPIO1_SEL Register (Offset = 62h) [reset = 0x00]

GPIO1_SEL is shown in Figure 138 and described in Table 41.

Return to Summary Table.

Figure 138. GPIO1_SEL Register

7	6	5	4	3	2	1	0
RESERVED				GPIO1_SEL			
R/W				R/W			

Table 41. GPIO1_SEL Register Field Descriptions

Bit	Field	Type	Reset	Description
7-4	RESERVED	R/W	0000	This bit is reserved
3-0	GPIO1_SEL	R/W	0000	0000: off (low) 0001: Hybrid-Pro two level classG waveform control output 0010: Register GPIO1 output 0011: Auto mute flag (asserted when both L and R channels are auto muted) 0100: Auto mute flag for left channel 0101: Auto mute flag for right channel 0110: Clock invalid flag (clock error or clock missing) 0111: Reserved 1000: GPIO1 as WARNZ output 1001: Hybrid-Pro multi-level classH control waveform output 1011: GPIO1 as FAULTZ output 1100: GPIO1 as SPI CLK 1101: GPIO1 as SPI_MOSI 1110: Reserved 1111: Reserved

Copyright © 2019, Texas Instruments Incorporated

9.6.1.35 GPIO2_SEL Register (Offset = 63h) [reset = 0x00]

GPIO2_SEL is shown in Figure 139 and described in Table 42.

Return to Summary Table.

Figure 139. GPIO2_SEL Register

7	6	5	4	3	2	1	0
RESERVED				GPIO2_SEL			
R/W				R/W			

Table 42. GPIO2_SEL Register Field Descriptions

Bit	Field	Type	Reset	Description
7-4	RESERVED	R/W	0000	This bit is reserved
3-0	GPIO2_SEL	R/W	0000	0000: off (low) 0001: Hybrid-Pro two level classG waveform control output 0010: Register GPIO2 output 0011: Auto mute flag (asserted when both L and R channels are auto muted) 0100: Auto mute flag for left channel 0101: Auto mute flag for right channel 0110: Clock invalid flag (clock error or clock missing) 0111: Reserved 1000: GPIO2 as WARNZ output 1001: Hybrid-Pro multi-level classH control waveform output 1011: GPIO2 as FAULTZ output 1100: GPIO2 as SPI CLK 1101: GPIO2 as SPI_MOSI 1110: Reserved 1111: Reserved

9.6.1.36 GPIO_INPUT_SEL Register (Offset = 64h) [reset = 0x00]

GPIO_INPUT_SEL is shown in Figure 140 and described in Table 43.

Return to Summary Table.

Figure 140. GPIO_INPUT_SEL Register

7	6	5	4	3	2	1	0
GPIO_SPI_MISO_SEL		GPIO_PHASE_SYNC_SEL		GPIO_RESETZ_SEL		GPIO_MUTEZ_SEL	
R/W		R/W		R/W		R/W	

Table 43. GPIO_INPUT_SEL Register Field Descriptions

Bit	Field	Type	Reset	Description
7-6	GPIO_SPI_MISO_SEL	R/W	00	00: N/A 01: GPIO0 10: GPIO1 11: GPIO2
5-4	GPIO_PHASE_SYNC_SEL	R/W	00	00: N/A 01: GPIO0 10: GPIO1 11: GPIO2
3-2	GPIO_RESETZ_SEL	R/W	00	00: N/A 01: GPIO0 10: GPIO1 11: GPIO2 can not be reset by GPIO reset
1-0	GPIO_MUTEZ_SEL (Enable device into Hiz mode)	R/W	00	00: N/A 01: GPIO0 10: GPIO1 11: GPIO2

Copyright © 2019, Texas Instruments Incorporated

9.6.1.37 GPIO_OUT Register (Offset = 65h) [reset = 0x00]

GPIO_OUT is shown in Figure 141 and described in Table 44.

Return to Summary Table.

Figure 141. GPIO_OUT Register

7	6	5	4	3	2	1	0
RESERVED					GPIO_OUT		
R/W					R/W		

Table 44. GPIO_OUT Register Field Descriptions

Bit	Field	Type	Reset	Description
7-3	RESERVED	R/W	00000	This bit is reserved
2-0	GPIO_OUT	R/W	000	bit0: GPIO0 output bit1: GPIO1 output bit2: GPIO2 output

9.6.1.38 GPIO_OUT_INV Register (Offset = 66h) [reset = 0x00]

GPIO_OUT_INV is shown in Figure 142 and described in Table 45.

Return to Summary Table.

Figure 142. GPIO_OUT_INV Register

7	6	5	4	3	2	1	0
RESERVED					GPIO_OUT		
R/W					R/W		

Table 45. GPIO_OUT_INV Register Field Descriptions

Bit	Field	Type	Reset	Description
7-3	RESERVED	R/W	00000	This bit is reserved
2-0	GPIO_OUT	R/W	000	bit0: GPIO0 output invert bit1: GPIO1 output invert bit2: GPIO2 output invert

9.6.1.39 DIE_ID Register (Offset = 67h) [reset = 97h]

DIE_ID is shown in Figure 143 and described in Table 46.

Return to Summary Table.

Figure 143. DIE_ID Register

7	6	5	4	3	2	1	0
DIE_ID							
R							

Table 46. DIE_ID Register Field Descriptions

Bit	Field	Type	Reset	Description
7-0	DIE_ID	R	10010111	DIE ID

Copyright © 2019, Texas Instruments Incorporated

9.6.1.40 POWER_STATE Register (Offset = 68h) [reset = 0x00]

POWER_STATE is shown in Figure 144 and described in Table 47.

Return to Summary Table.

Figure 144. POWER_STATE Register

7	6	5	4	3	2	1	0
STATE_RPT							
R							

Table 47. POWER_STATE Register Field Descriptions

Bit	Field	Type	Reset	Description
7-0	STATE_RPT	R	00000000	00: Deep sleep 01: Seep 10: HIZ 11: Play others: reserved

Copyright © 2019, Texas Instruments Incorporated

9.6.1.41 AUTOMUTE_STATE Register (Offset = 69h) [reset = 0x00]

AUTOMUTE_STATE is shown in Figure 145 and described in Table 48.

Return to Summary Table.

Figure 145. AUTOMUTE_STATE Register

7	6	5	4	3	2	1	0
RESERVED						ZERO_RIGHT_MON	ZERO_LEFT_MON
R						R	R

Table 48. AUTOMUTE_STATE Register Field Descriptions

Bit	Field	Type	Reset	Description
7-2	RESERVED	R	000000	This bit is reserved
1	ZERO_RIGHT_MON	R	0	This bit indicates the auto mute status for right channel. 0: Not auto muted 1: Auto muted
0	ZERO_LEFT_MON	R	0	This bit indicates the auto mute status for left channel. 0: Not auto muted 1: Auto muted

9.6.1.42 PHASE_CTRL Register (Offset = 6Ah) [reset = 0]

PHASE_CTRL is shown in Figure 146 and described in Table 49.

Return to Summary Table.

Figure 146. PHASE_CTRL Register

7	6	5	4	3	2	1	0
RESERVED				RAMP_PHASE_SEL		PHASE_SYNC_SEL	PHASE_SYNC_EN
R/W				R/W		R/W	R/W

Table 49. PHASE_CTRL Register Field Descriptions

Bit	Field	Type	Reset	Description
7-4	RESERVED	R/W	0000	This bit is reserved
3-2	RAMP_PHASE_SEL	R/WTAS	00	select ramp clock phase when multi devices integrated in one system to reduce EMI and peak supply peak current, it is recomended set all devices the same RAMP frequency and same spread spectrum. it must be set before driving device into PLAY mode if this feature is needed. 2'b00: phase 0 2'b01: phase 1 2'b10: phase 2 2'b11: phase 3 all of above have a 45 degree of phase shift
1	PHASE_SYNC_SEL	R/W	0	ramp phase sync sel, 0: is gpio sync; 1: intenal sync
0	PHASE_SYNC_EN	R/W	0	ramp phase sync enable

Copyright © 2019, Texas Instruments Incorporated

9.6.1.43 RAMP_SS_CTRL0 Register (Offset = 6Bh) [reset = 0x00]

RAMP_SS_CTRL0 is shown in Figure 147 and described in Table 50.

Return to Summary Table.

Figure 147. SS_CTRL0 Register

7	6	5	4	3	2	1	0
RESERVED	RESERVED	SS_PRE_DIV_SEL	SS_MANUAL_MODE	RESERVED		SS_RDM_EN	SS_TRI_EN
R/W	R/W	R/W	R/W	R/W		R/W	R/W

Table 50. RAMP_SS_CTRL0 Register Field Descriptions

Bit	Field	Type	Reset	Description
7	RESERVED	R/W	0	This bit is reserved
6	RESERVED	R/W	0	This bit is reserved
5	SS_PRE_DIV_SEL	R/W	0	select pll clock divide 2 as source clock in manual mode
4	SS_MANUAL_MODE	R/W	0	set ramp ss controller to manual mode
3-2	RESERVED	R/W	00	This bit is reserved
1	SS_RDM_EN	R/W	0	random SS enable
0	SS_TRI_EN	R/W	0	triangle SS enable

9.6.1.44 SS_CTRL1 Register (Offset = 6Ch) [reset = 0x00]

SS_CTRL1 is shown in Figure 148 and described in Table 51.

Return to Summary Table.

Figure 148. SS_CTRL1 Register

7	6	5	4	3	2	1	0
RESERVED	SS_RDM_CTRL			SS_TRI_CTRL			
R/W	R/W			R/W			

Table 51. SS_CTRL1 Register Field Descriptions

Bit	Field	Type	Reset	Description
7	RESERVED	R/W	0	This bit is reserved
6-4	SS_RDM_CTRL	R/W	000	Add Dither
3-0	SS_TRI_CTRL	R/W	0000	triangle SS frequency and range control

Copyright © 2019, Texas Instruments Incorporated

9.6.1.45 SS_CTRL2 Register (Offset = 6Dh) [reset = 0xA0]

SS_CTRL2 is shown in Figure 149 and described in Table 52.

Return to Summary Table.

Figure 149. SS_CTRL2 Register

7	6	5	4	3	2	1	0
TM_FREQ_CTRL							
R/W							

Table 52. SS_CTRL2 Register Field Descriptions

Bit	Field	Type	Reset	Description
7-0	TM_FREQ_CTRL	R/W	10100000	control ramp frequency in manual mode, F=61440000/N

9.6.1.46 SS_CTRL3 Register (Offset = 6Eh) [reset = 0x11]

SS_CTRL3 is shown in Figure 150 and described in Table 53.

Return to Summary Table.

Figure 150. SS_CTRL3 Register

7	6	5	4	3	2	1	0
TM_DSTEP_CTRL				TM_USTEP_CTRL			
R/W				R/W			

Table 53. SS_CTRL3 Register Field Descriptions

Bit	Field	Type	Reset	Description
7-4	SS_TM_DSTEP_CTRL	R/W	0001	control triangel mode spread spectrum fall step in ramp ss manual mode
3-0	SS_TM_USTEP_CTRL	R/W	0001	control triangle mode spread spectrum rise step in ramp ss manual mode

9.6.1.47 SS_CTRL4 Register (Offset = 6Fh) [reset = 0x24]

SS_CTRL4 is shown in Figure 151 and described in Table 54.

Return to Summary Table.

Figure 151. SS_CTRL4 Register

7	6	5	4	3	2	1	0
RESERVED	TM_AMP_CTRL		SS_TM_PERIOD_BOUNDRY				
R/W	R/W		R/W				

Table 54. SS_CTRL4 Register Field Descriptions

Bit	Field	Type	Reset	Description
7	RESERVED	R/W	0	This bit is reserved
6-5	TM_AMP_CTRL	R/W	01	control ramp amp ctrl in ramp ss manual model
4-0	SS_TM_PERIOD_BOUNDRY	R/W	00100	control triangle mode spread spectrum boundary in ramp ss manual mode

Copyright © 2019, Texas Instruments Incorporated

9.6.1.48 CHAN_FAULT Register (Offset = 70h) [reset = 0x00]

CHAN_FAULT is shown in Figure 152 and described in Table 55.

Return to Summary Table.

Figure 152. CHAN_FAULT Register

7	6	5	4	3	2	1	0
RESERVED				CH1_DC_1	CH2_DC_1	CH1_OC_I	CH2_OC_I
R				R	R	R	R

Table 55. CHAN_FAULT Register Field Descriptions

Bit	Field	Type	Reset	Description
7-4	RESERVED	R	0000	This bit is reserved
3	CH1_DC_1	R	0	left channel DC fault
2	CH2_DC_1	R	0	right channel DC fault
1	CH1_OC_I	R	0	left channel over current fault
0	CH2_OC_I	R	0	right channel over current fault

9.6.1.49 GLOBAL_FAULT1 Register (Offset = 71h) [reset = 0h]

GLOBAL_FAULT1 is shown in Figure 153 and described in Table 56.

Return to Summary Table.

Figure 153. GLOBAL_FAULT1 Register

7	6	5	4	3	2	1	0
OTP_CRC_ERROR	BQ_WR_ERROR	LOAD_EEPROM_ERROR	DVDD_UV_I	DVDD_OV_I	CLK_FAULT_I	PVDD_OV_I	PVDD_UV_I
R	R	R	R	R	R	R	R

Table 56. GLOBAL_FAULT1 Register Field Descriptions

Bit	Field	Type	Reset	Description
7	OTP_CRC_ERROR	R	0	Indicate OTP CRC check error.
6	BQ_WR_ERROR	R	0	the recent BQ is written failed
5	LOAD_EEPROM_ERROR	R	0	0: EEPROM boot load was done successfully 1: EEPROM boot load was done unsuccessfully
4-3	RESERVED	R	00	This bit is reserved
2	CLK_FAULT_I	R	0	clock fault
1	PVDD_OV_I	R	0	PVDD OV fault
0	PVDD_UV_I	R	0	PVDD UV fault

Copyright © 2019, Texas Instruments Incorporated

9.6.1.50 GLOBAL_FAULT2 Register (Offset = 72h) [reset = 0h]

GLOBAL_FAULT2 is shown in Figure 154 and described in Table 57.

Return to Summary Table.

Figure 154. GLOBAL_FAULT2 Register

7	6	5	4	3	2	1	0
RESERVED					CBC_FAULT_CH2_I	CBC_FAULT_CH1_I	OTSD_I
R					R	R	R

Table 57. GLOBAL_FAULT2 Register Field Descriptions

Bit	Field	Type	Reset	Description
7-3	RESERVED	R	0000	This bit is reserved
2	CBC_FAULT_CH2_I	R	0	right channel cycle by cycle over current fault
1	CBC_FAULT_CH1_I	R	0	left channel cycle by cycle over current fault
0	OTSD_I	R	0	over temperature shut down fault

9.6.1.51 WARNING Register (Offset = 73h) [reset = 0x00]

WARNING is shown in Figure 155 and described in Table 58.

Return to Summary Table.

Figure 155. WARNING Register

7	6	5	4	3	2	1	0
RESERVED		CBCW_CH1_I	CBCW_CH2_I	OTW_LEVEL4_I	OTW_LEVEL3_I	OTW_LEVEL2_I	OTW_LEVEL1_I
R		R	R	R	R	R	R

Table 58. WARNING Register Field Descriptions

Bit	Field	Type	Reset	Description
7-6	RESERVED	R	0	This bit is reserved
5	CBCW_CH1_I	R	0	left channel cycle by cycle over current warning
4	CBCW_CH2_I	R	0	right channel cycle by cycle over current warning
3	OTW_LEVEL4_I	R	0	over temperature warning leve4, 146C
2	OTW_LEVEL3_I	R	0	over temperature warning leve3, 134C
1	OTW_LEVEL2_I	R	0	over temperature warning leve2, 122C
0	OTW_LEVEL1_I	R	0	over temperature warning leve1, 112C

Copyright © 2019, Texas Instruments Incorporated

9.6.1.52 PIN_CONTROL1 Register (Offset = 74h) [reset = 0x00]

PIN_CONTROL1 is shown in Figure 156 and described in Table 59.

Return to Summary Table.

Figure 156. PIN_CONTROL1 Register

7	6	5	4	3	2	1	0
MASK_OTSD	MASK_DVDD_UV	MASK_DVDD_OV	MASK_CLK_FAULT	RESERVED	MASK_PVDD_UV	MASK_DC	MASK_OC
R/W	R/W	R/W	R/W	R	R/W	R/W	R/W

Table 59. PIN_CONTROL1 Register Field Descriptions

Bit	Field	Type	Reset	Description
7	MASK_OTSD	R/W	0	mask OTSD fault report
6	MASK_DVDD_UV	R/W	0	mask DVDD UV fault report
5	MASK_DVDD_OV	R/W	0	mask DVDD OV fault report
4	MASK_CLK_FAULT	R/W	0	mask clock fault report
3	RESERVED	R	0	
2	MASK_PVDD_UV	R/W	0	mask PVDD UV fault report mask PVDD OV fault report
1	MASK_DC	R/W	0	mask DC fault report
0	MASK_OC	R/W	0	mask OC fault report

9.6.1.53 PIN_CONTROL2 Register (Offset = 75h) [reset = 0xF8]

PIN_CONTROL2 is shown in Figure 157 and described in Table 60.

Return to Summary Table.

Figure 157. PIN_CONTROL2 Register

7	6	5	4	3	2	1	0
CBC_FAULT_LATCH_EN	CBC_WARN_LATCH_EN	CLKFLT_LATCH_EN	OTSD_LATCH_EN	OTW_LATCH_EN	MASK_OTW	MASK_CBCW	MASK_CBC_FAULT
R/W	R/W	R/W	R/W	R/W	R/W	R/W	R/W

Table 60. PIN_CONTROL2 Register Field Descriptions

Bit	Field	Type	Reset	Description
7	CBC_FAULT_LATCH_EN	R/W	1	enable CBC fault latch
6	CBC_WARN_LATCH_EN	R/W	1	enable CBC warning latch
5	CLKFLT_LATCH_EN	R/W	1	enable clock fault latch
4	OTSD_LATCH_EN	R/W	1	enable OTSD fault latch
3	OTW_LATCH_EN	R/W	1	enable OT warning latch
2	MASK_OTW	R/W	0	mask OT warning report
1	MASK_CBCW	R/W	0	mask CBC warning report
0	MASK_CBC_FAULT	R/W	0	mask CBC fault report

Copyright © 2019, Texas Instruments Incorporated

9.6.1.54 MISC_CONTROL Register (Offset = 76h) [reset = 0x00]

MISC_CONTROL is shown in Figure 158 and described in Table 61.

Return to Summary Table.

Figure 158. MISC_CONTROL Register

7	6	5	4	3	2	1	0
DET_STATUS_LATCH	RESERVED		OTSD_AUTO_REC_EN	RESERVED			
R/W	R/W		R/W	R/W			

Table 61. MISC_CONTROL Register Field Descriptions

Bit	Field	Type	Reset	Description
7	DET_STATUS_LATCH	R/W	0	1:latch clock detection status 0:don't latch clock detection status
6-5	RESERVED	R/W	00	This bit is reserved
4	OTSD_AUTO_REC_EN	R/W	0	OTSD auto recovery enable
3-0	RESERVED	R/W	0000	This bit is reserved

9.6.1.55 CBC_CONTROL Register (Offset = 77h) [reset = 0x00]

CBC_CONTROL is shown in Figure 159 and described in Table 62.

Return to Summary Table.

Figure 159. CBC_CONTROL Register

7	6	5	4	3	2	1	0
RESERVED					CBC_EN	CBC_WARN_EN	CBC_FAULT_EN
R/W					R/W	R/W	R/W

Table 62. CBC_CONTROL Register Field Descriptions

Bit	Field	Type	Reset	Description
7-3	RESERVED	R/W	00000	This bit is reserved
2	CBC_EN	R/W	0	enable CBC function
1	CBC_WARN_EN	R/W	0	enable CBC warning
0	CBC_FAULT_EN	R/W	0	enable CBC fault

Copyright © 2019, Texas Instruments Incorporated

9.6.1.56 FAULT_CLEAR Register (Offset = 78h) [reset = 0x00]

FAULT_CLEAR is shown in Figure 160 and described in Table 63.

Return to Summary Table.

Figure 160. FAULT_CLEAR Register

7	6	5	4	3	2	1	0
ANALOG_FAULT_CLEAR	RESERVED						
W	R/W						

Table 63. FAULT_CLEAR Register Field Descriptions

Bit	Field	Type	Reset	Description
7	ANALOG_FAULT_CLEAR	W	0	WRITE CLEAR BIT once write this bit to 1, device will clear analog fault
6-0	RESERVED	R/W	0000000	This bit is reserved

10 Application and Implementation

注

Information in the following applications sections is not part of the TI component specification, and TI does not warrant its accuracy or completeness. TI's customers are responsible for determining suitability of components for their purposes. Customers should validate and test their design implementation to confirm system functionality.

10.1 Application Information

This section details the information required to configure the device for several popular configurations and provides guidance on integrating the TAS5825P device into the larger system.

10.1.1 Bootstrap Capacitors

The output stage of the TAS5825P uses a high-side NMOS driver, rather than a PMOS driver. To generate the gate driver voltage for the high-side NMOS, a bootstrap capacitor for each output terminal acts as a floating power supply for the switching cycle. Use 0.22-µF capacitors to connect the appropriate output pin (OUT_X) to the bootstrap pin (BST_X). For example, connect a 0.22-µF capacitor between OUT_A and BST_A for bootstrapping the A channel. Similarly, connect another 0.22-µF capacitor between the OUT_B and BST_B pins for the B channel inverting output.

10.1.2 Inductor Selections

It is required that the peak current is smaller than the OCP (Over current protection) value which is 7.5 A, there are 3 cases which cause high peak current flow through inductor.

1. During power up (idle state, no audio input), the duty cycle increases from 0 to θ.

$$I_{peak_power_up} \approx PVDD \times \sqrt{C/L} \times \sin(1/\sqrt{L \times C} \times \theta / F_{sw}) \tag{1}$$

注

θ=0.5 (BD Modulation), 0.14 (1SPW Modulation), 0.14 (Hybrid Modulation)

表 64. Peak Current During Power Up

PVDD	L (µH)	C (µF)	Fsw (kHz)	$I_{peak_power_up}$
24	4.7	0.68	384	6.07A
24	4.7	0.68	768	3.25A
24	10	0.68	384	3A
24	10	0.68	768	1.55A
12	4.7	0.68	384	3.32A
12	10	0.68	384	1.55A

2. During music playing, some audio burst signal (high frequency) with very hard PVDD clipping causes PWM duty cycle increase dramatically. This is the worst case and it rarely happens.

$$I_{peak_clipping} \approx PVDD \times (1-\theta)/(F_{sw} \times L) \tag{2}$$

3. Peak current due to Max output power. Ignore the ripple current flow through capacitor here.

$$I_{peak_output_power} \approx \sqrt{2 \times Max_Output_Power / R_{speaker_Load}} \tag{3}$$

Same PVDD and switching frequency, larger inductance means smaller idle current for lower power dissipation. It's suggested that inductor saturation current I_{SAT}, is larger than the amplifier peak current during power-up and play audio.

版权 © 2019, Texas Instruments Incorporated

$$I_{SAT} \geq \max(I_{peak_power_up}, I_{peak_clipping}, I_{peak_output_power}) \tag{4}$$

In addition, the effective inductance at the peak current is required to be at least 80% of the inductance value in 表 65 to meet datasheet specifications.

表 65. Inductor Requirements

PVDD (V)	Switching Frequency (kHz)	Minimum Inductance (L) (µH)
≤ 12	384	4.7
> 12	384	10

For higher switching frequencies (Fsw), select the inductors with minimum inductance to be 384kHz / Fsw × L.

10.1.3 Power Supply Decoupling

To ensure high efficiency, low THD, and high PSRR, proper power supply decoupling is necessary. Noise transients on the power supply lines are short duration voltage spikes. These spikes can contain frequency components that extend into the hundreds of megahertz. The power supply input must be decoupled with some good quality, low ESL, Low ESR capacitors larger than 22 µF. These capacitors bypasses low frequency noise to the ground plane. For high frequency decoupling, place 1-µF or 0.1-µF capacitors as close as possible to the PVDD pins of the device.

10.1.4 Output EMI Filtering

The TAS5825P device is often used with a low-pass filter, which is used to filter out the carrier frequency of the PWM modulated output. This filter is frequently referred to as the L-C Filter, due to the presence of an inductive element L and a capacitive element C to make up the 2-pole filter.

The L-C filter removes the carrier frequency, reducing electromagnetic emissions and smoothing the current waveform which is drawn from the power supply. The presence and size of the L-C filter is determined by several system level constraints. In some low-power use cases that have no other circuits which are sensitive to EMI, a simple ferrite bead or a ferrite bead plus a capacitor can replace the tradition large inductor and capacitor that are commonly used. In other high-power applications, large toroid inductors are required for maximum power and film capacitors can be used due to audio characteristics. Refer to the application report Class-D LC Filter Design (SLOA119) for a detailed description on the proper component selection and design of an L-C filter based upon the desired load and response.

For EMI performance and EMI Design consideration, reference to application report: TAS5825M Design Considerations for EMC.

10.2 Typical Applications

10.2.1 2.0 (Stereo BTL) System

In the 2.0 system, two channels are presented to the amplifier via the digital input signal. These two channels are amplified and then sent to two separate speakers. In some cases, the amplified signal is further separated based upon frequency by a passive crossover network after the L-C filter. Even so, the application is considered 2.0.

Most commonly, the two channels are a pair of signals called a stereo pair, with one channel containing the audio for the left channel and the other channel containing the audio for the right channel. While certainly the two channels can contain any two audio channels, such as two surround channels of a multi-channel speaker system, the most popular occurrence in two channels systems is a stereo pair.

图 161 shows the 2.0 (Stereo BTL) system application.

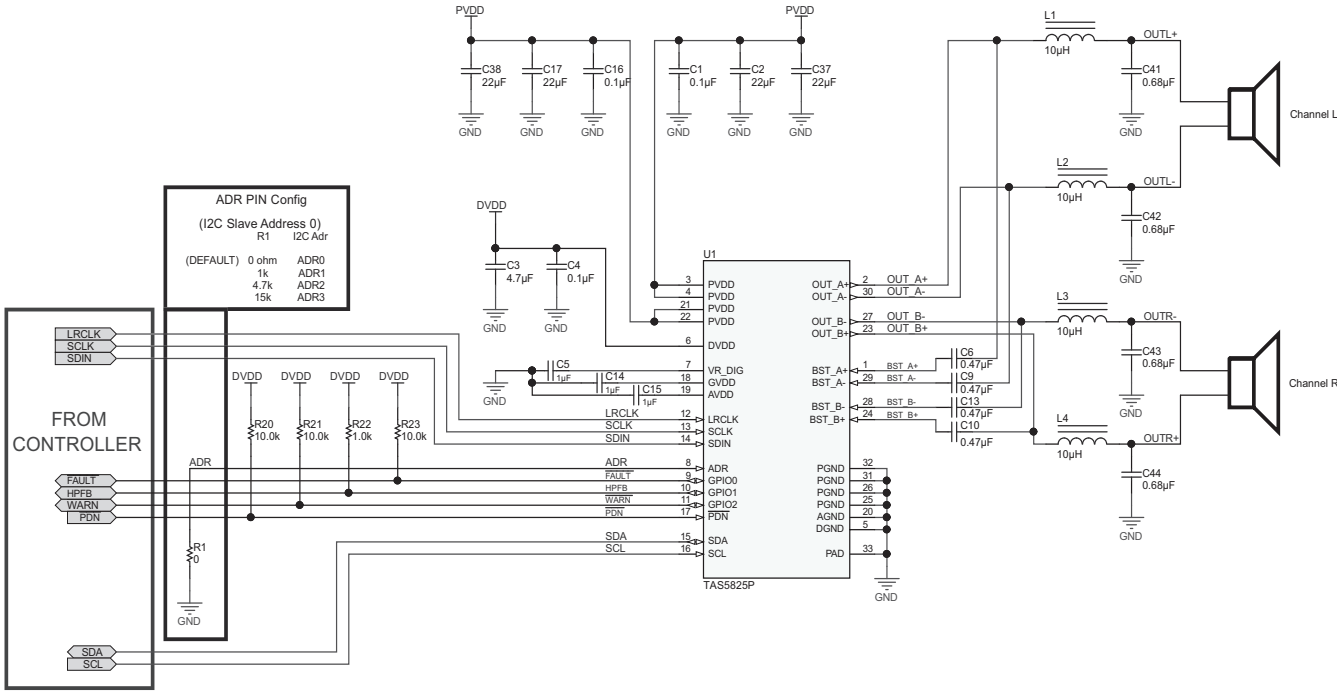

图 161. 2.0 (Stereo BTL) System Application Schematic

版权 © 2019, Texas Instruments Incorporated

Typical Applications (接下页)

10.2.2 Design Requirements

- Power supplies:
  - 3.3-V supply
  - 5-V to 24-V supply
- Communication: host processor serving as I^2C compliant master
- External memory (such as EEPROM and FLASH) used for coefficients.

The requirements for the supporting components for the TAS5825P device in a Stereo 2.0 (BTL) system is provide in 表 66.

表 66. Supporting Component Requirements for Stereo 2.0 (BTL) Systems

REFERENCE DESIGNATOR	VALUE	SIZE	DETAILED DESCRIPTION
C1, C16	0.1 µF	0402	CAP, CERM, 0.1 µF, 50 V, ±10%, X7R, 0402
C2, C17, C37, C38	22 µF	0805	CAP, CERM, 22 µF, 35 V, ±20%, JB, 0805
C3	4.7 µF	0603	CAP, CERM, 4.7 µF, 10 V, ±10%, X5R, 0603
C4	0.1 µF	0603	CAP, CERM, 0.1 µF, 16 V, ±10%, X7R, 0603
C5, C14, C15	1 µF	0603	CAP, CERM, 1 µF, 16 V, ±10%, X5R, 0603
C6, C9, C10, C13	0.47 µF	0603	CAP, CERM, 0.47 µF, 16 V, ±10%, X7R, 0603
C41, C42, C43, C44	0.68 µF	0805	CAP, CERM, 0.68 µF, 50 V, ±10%, X7R, 0805
L1, L2, L3, L4	10 µH		Inductor, Shielded, Ferrite, 10 µH, 4.4 A, 0.0304 Ω, SMD 1274AS-H-100M=P3
R1	0 Ω	0402	RES, 0, 5%, 0.063 W, 0402
R20, R21, R23	10 kΩ	0402	RES, 10.0 k, 1%, 0.063 W, 0402
R22	1 kΩ	0402	RES, 1.0 k, 1%, 0.063 W, 0402

10.2.3 Detailed Design procedures

This Design procedures can be used for both Stereo 2.0 and Mono Mode.

10.2.3.1 Step One: Hardware Integration

- Using the Typical Application Schematic as a guide, integrate the hardware into the system schematic.
- Following the recommended component placement, board layout, and routing given in the example layout above, integrate the device and its supporting components into the system PCB file.
  - The most critical sections of the circuit are the power supply inputs, the amplifier output signals, and the high-frequency signals, all of which go to the serial audio port. Constructing these signals to ensure they are given precedent as design trade-offs are made is recommended.
  - For questions and support go to the E2E forums (e2e.ti.com). If deviating from the recommended layout is necessary, go to the E2E forum to request a layout review.

10.2.3.2 Step Two: Hardware Integration

Using the TAS5825PEVM evaluation module and the PPC3 app to configure the desired device settings.

10.2.3.3 Step Three: Software Integration

- Using the End System Integration feature of the PPC3 app to generate a baseline configuration file.
- Generate additional configuration files based upon operating modes of the end-equipment and integrate static configuration information into initialization files.
- Integrate dynamic controls (such as volume controls, mute commands, and mode-based EQ curves) into the main system program.

10.2.4 Application Curves

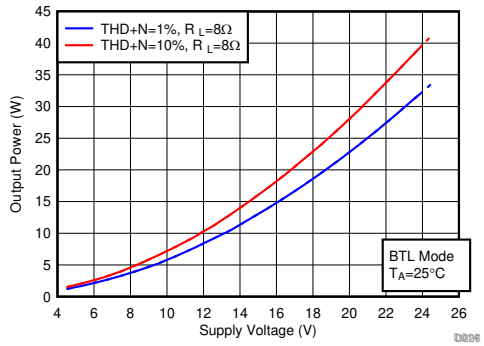

Load=8Ω Hybrid Modulation Fsw=384kHz

图 162. Output Power vs PVDD

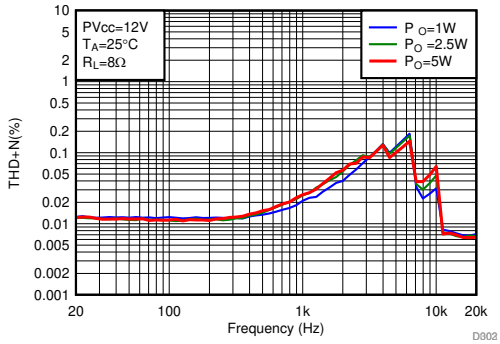

PVDD=12V Hybrid Modulation Fsw=384kHz

图 163. THD+N vs Frequency

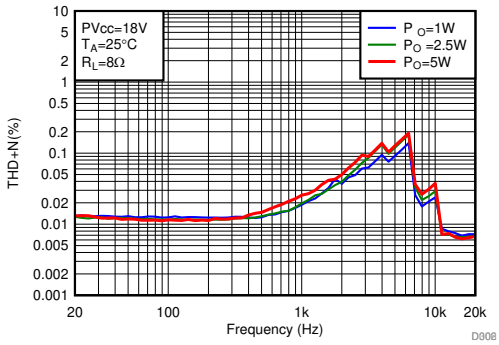

PVDD=18V Hybrid Modulation Fsw=384kHz

图 164. THD+N vs Frequency

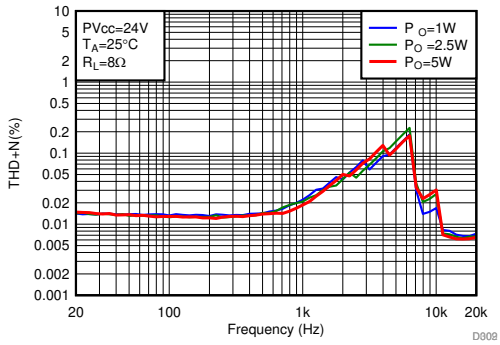

PVDD=24V Hybrid Modulation Fsw=384kHz

图 165. THD+N vs Frequency

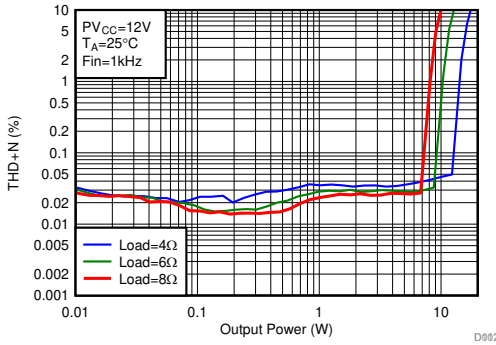

PVDD=12V Hybrid Modulation Fsw=384kHz

图 166. THD+N vs Power

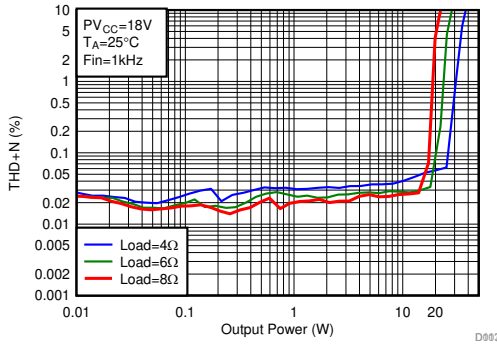

PVDD=18V Hybrid Modulation Fsw=384kHz

图 167. THD+N vs Power

版权 © 2019, Texas Instruments Incorporated

10.2.5 MONO (PBTL) Systems

In MONO mode, TAS5805M can be used as PBTL mode to drive sub-woofer with more output power.

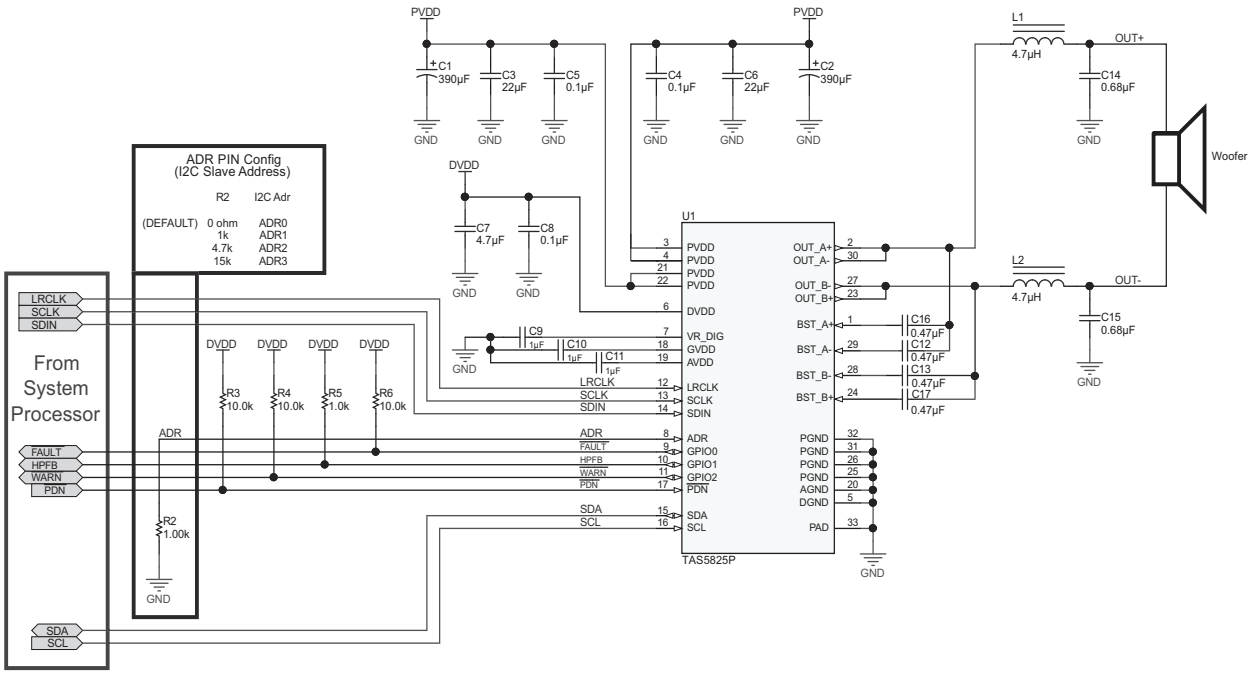

图 168. Sub-woofer (PBTL) Application Schematic

表 67. Supporting Component Requirements for Sub-woofer (PBTL) Systems

REFERENCE DESIGNATOR	VALUE	SIZE	DETAILED DESCRIPTION
C1, C2	390uF	10mmx10mm	CAP, AL, 390 µF, 35 V, +/- 20%, 0.08 ohm, SMD
C4, C5	0.1 µF	0402	CAP, CERM, 0.1 µF, 50 V, ±10%, X7R, 0402
C3, C6	22 µF	0805	CAP, CERM, 22 µF, 35 V, ±20%, JB, 0805
C7	4.7 µF	0603	CAP, CERM, 4.7 µF, 10 V, ±10%, X5R, 0603
C8	0.1 µF	0603	CAP, CERM, 0.1 µF, 16 V, ±10%, X7R, 0603
C9,C10,C11	1 µF	0603	CAP, CERM, 1 µF, 16 V, ±10%, X5R, 0603
C12,C13,C16,C17	0.47 µF	0603	CAP, CERM, 0.47 µF, 16 V, ±10%, X7R, 0603
C14,C15	0.68 µF	0805	CAP, CERM, 0.68 µF, 50 V, ±10%, X7R, 0805
L1,L2	4.7 µH		Inductor, Shielded, 4.7 µH, 8.7 A
R2, R5	1 kΩ	0402	RES, 1.0k, 1%, 0.063 W, 0402
R3,R4,R6	10 kΩ	0402	RES, 10.0 k, 1%, 0.063 W, 0402

10.2.6 Application Curves

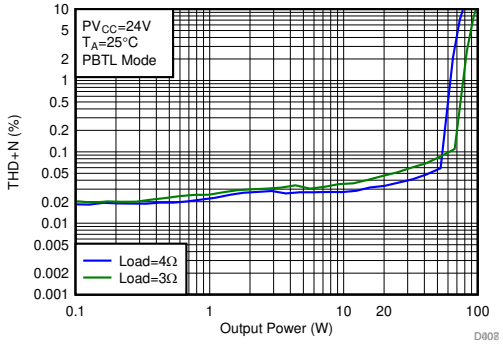

PVDD = 18 V Hybrid Modulation Fsw = 384 kHz

图 169. THD+N vs Output Power

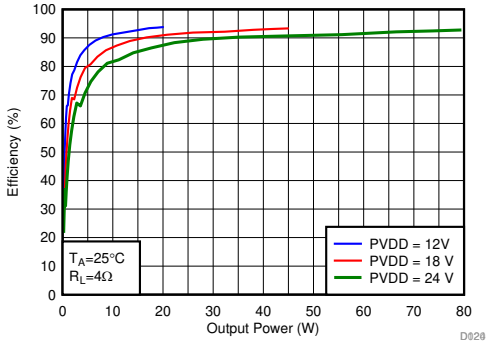

Load = 4Ω Hybrid Modulation Fsw = 384 kHz

图 170. Efficiency vs Output Power

版权 © 2019, Texas Instruments Incorporated

11 Power Supply Recommendations

The TAS5825P device requires two power supplies for proper operation. A high-voltage supply calls PVDD is required to power the output stage of the speaker amplifier and its associated circuitry. Additionally, one low-voltage power supply which is calls DVDD is required to power the various low-power portions of the device. The allowable voltage range for both PVDD and DVDD supply are listed in the *Recommended Operating Conditions* table. The two power supplies do not have a required powerup sequence. The power supplies can be powered on in any order.

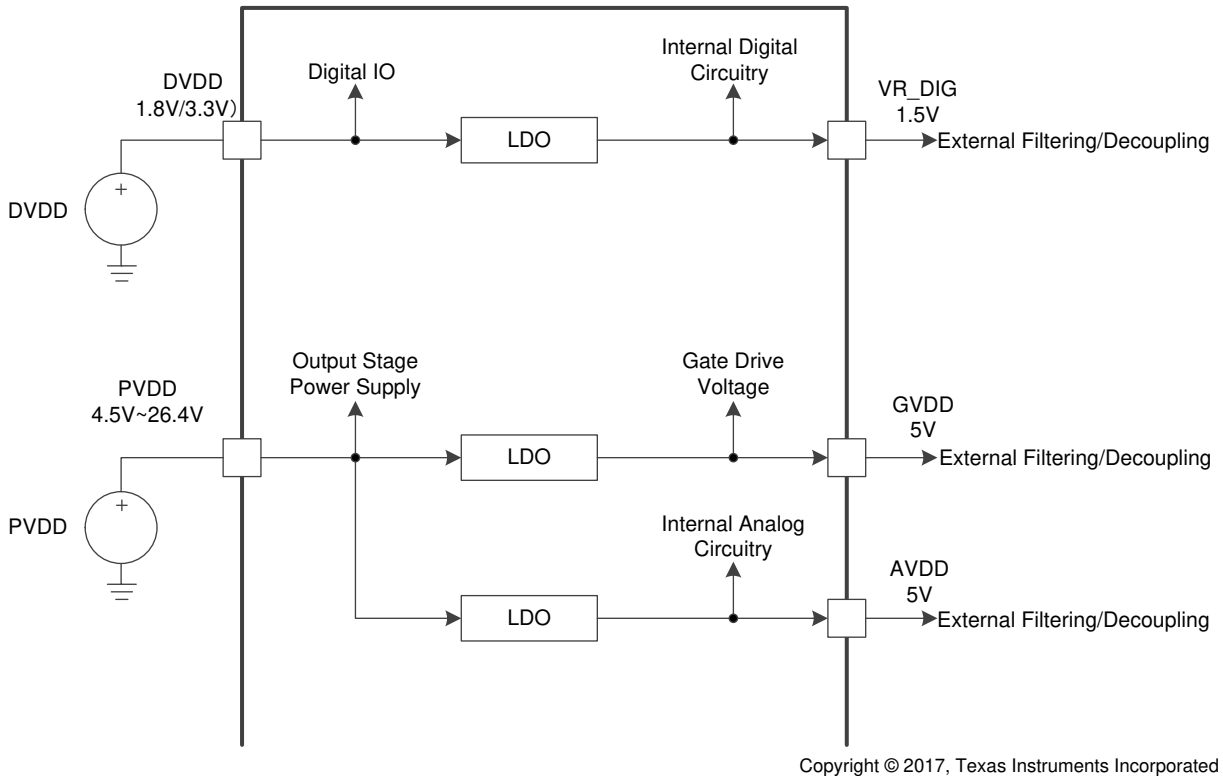

图 171. Power Supply Function Block Diagram

11.1 DVDD Supply

The DVDD supply that is required from the system is used to power several portions of the device. As shown in 图 171, it provides power to the DVDD pin. Proper connection, routing and decoupling techniques are highlighted in the *Application and Implementation* section and the *Layout Example* section and must be followed as closely as possible for proper operation and performance.

Some portions of the device also require a separate power supply that is a lower voltage than the DVDD supply. To simplify the power supply requirements for the system, the TAS5825P device includes an integrated low dropout (LDO) linear regulator to create this supply. This linear regulator is internally connected to the DVDD supply and its output is presented on the DVDD_REG pin, providing a connection point for an external bypass capacitor. It is important to note that the linear regulator integrated in the device has only been designed to support the current requirements of the internal circuitry, and should not be used to power any additional external circuity. Additional loading on this pin could cause the voltage to sag, negatively affecting the performance and operation of the device.

11.2 PVDD Supply

The output stage of the speaker amplifier drives the load using the PVDD supply. This is the power supply which provides the drive current to the load during playback. Proper connection, routing, and decoupling techniques are highlighted in the TAS5825PEVM and must be followed as closely as possible for proper operation and performance. Due to the high-voltage switching of the output stage, it is particularly important to properly decouple the output power stages in the manner described in the TAS5825P device *Application and Implementation*. Lack of proper decoupling, like that shown in the *Application and Implementation*, results in voltage spikes which can damage the device.

A separate power supply is required to drive the gates of the MOSFETs used in the output stage of the speaker amplifier. This power supply is derived from the PVDD supply via an integrated linear regulator. A GVDD pin is provided for the attachment of decoupling capacitor for the gate drive voltage regulator. It is important to note that the linear regulator integrated in the device has only been designed to support the current requirements of the internal circuitry, and should not be used to power any additional external circuitry. Additional loading on this pin could cause the voltage to sag, negatively affecting the performance and operation of the device.

Another separate power supply is derived from the PVDD supply via an integrated linear regulator is AVDD. AVDD pin is provided for the attachment of decoupling capacitor for the TAS5825P internal circuitry. It is important to note that the linear regulator integrated in the device has only been designed to support the current requirements of the internal circuitry, and should not be used to power any additional external circuitry. Additional loading on this pin could cause the voltage to sag, negatively affecting the performance and operation of the device.

版权 © 2019, Texas Instruments Incorporated

12 Layout

12.1 Layout Guidelines

12.1.1 General Guidelines for Audio Amplifiers

Audio amplifiers which incorporate switching output stages must have special attention paid to their layout and the layout of the supporting components used around them. The system level performance metrics, including thermal performance, electromagnetic compliance (EMC), device reliability, and audio performance are all affected by the device and supporting component layout.

Ideally, the guidance provided in the applications section with regard to device and component selection can be followed by precise adherence to the layout guidance shown in the *Layout Example* section. These examples represent exemplary baseline balance of the engineering trade-offs involved with lying out the device. These designs can be modified slightly as needed to meet the needs of a given application. In some applications, for instance, solution size can be compromised to improve thermal performance through the use of additional contiguous copper neat the device. Conversely, EMI performance can be prioritized over thermal performance by routing on internal traces and incorporating a via picket-fence and additional filtering components. In all cases, it is recommended to start from the guidance shown in the *Layout Example* section and work with TI field application engineers or through the E2E community to modify it based upon the application specific goals.

12.1.2 Importance of PVDD Bypass Capacitor Placement on PVDD Network

Placing the bypassing and decoupling capacitors close to supply has long been understood in the industry. This applies to DVDD, AVDD, GVDD and PVDD. However, the capacitors on the PVDD net for the TAS5825P device deserve special attention.

The small bypass capacitors on the PVDD lines of the DUT must be placed as close to the PVDD pins as possible. Not only dose placing these device far away from the pins increase the electromagnetic interference in the system, but doing so can also negatively affect the reliability of the device. Placement of these components too far from the TAS5825P device can cause ringing on the output pins that can cause the voltage on the output pin to exceed the maximum allowable ratings shown in the *Absolute Maximum Ratings* table, damaging the deice . For that reason, the capacitors on the PVDD net must be no further away from their associated PVDD pins than what is shown in the example layouts in the *Layout Example* section.

12.1.3 Optimizing Thermal Performance

Follow the layout example shown in the 图 172 to achieve the best balance of solution size, thermal, audio, and electromagnetic performance. In some cases, deviation from this guidance can be required due to design constraints which cannot be avoided. In these instances, the system designer should ensure that the heat can get out of the device and into the ambient air surrounding the device. Fortunately, the heat created in the device naturally travels away from the device and into the lower temperature structures around the device.

12.1.3.1 Device, Copper, and Component Layout

Primarily, the goal of the PCB design is to minimize the thermal impedance in the path to those cooler structures. These tips should be followed to achieve that goal:

- Avoid placing other heat producing components or structures near the amplifier (including above or below in the end equipment).
- If possible, use a higher layer count PCB to provide more heat sinking capability for the TAS5825P device and to prevent traces and copper signal and power planes from breaking up the contiguous copper on the top and bottom layer.
- Place the TAS5825P device away from the edge of the PCB when possible to ensure that the heat can travel away from the device on all four sides.
- Avoid cutting off the flow of heat from the TAS5825P device to the surrounding areas with traces or via strings. Instead, route traces perpendicular to the device and line up vias in columns which are perpendicular to the device.
- Unless the area between two pads of a passive component is large enough to allow copper to flow in between the two pads, orient it so that the narrow end of the passive component is facing the TAS5825P device.
- Because the ground pins are the best conductors of heat in the package, maintain a contiguous ground plane

Layout Guidelines (接下页)

from the ground pins to the PCB area surrounding the device for as many of the ground pins as possible.

12.1.3.2 Stencil Pattern

The recommended drawings for the TAS5825P device PCB foot print and associated stencil pattern are shown at the end of this document in the package addendum. Additionally, baseline recommendations for the via arrangement under and around the device are given as a starting point for the PCB design. This guidance is provided to suit the majority of manufacturing capabilities in the industry and prioritizes manufacturability over all other performance criteria. In elevated ambient temperature or under high-power dissipation use-cases, this guidance may be too conservative and advanced PCB design techniques may be used to improve thermal performance of the system.

注

The customer must verify that deviation from the guidance shown in the package addendum, including the deviation explained in this section, meets the customer's quality, reliability, and manufacturability goals.

12.1.3.2.1 PCB footprint and Via Arrangement

The PCB footprint (also known as a symbol or land pattern) communicates to the PCB fabrication vendor the shape and position of the copper patterns to which the TAS5825P device is soldered. This footprint can be followed directly from the guidance in the package addendum at the end of this data sheet. It is important to make sure that the thermal pad, which connects electrically and thermally to the PowerPAD™ of the TAS5825P device, be made no smaller than what is specified in the package addendum. This ensures that the TAS5825P device has the largest interface possible to move heat from the device to the board.

The via pattern shown in the package addendum provides an improved interface to carry the heat from the device through to the layers of the PCB, because small diameter plated vias (with minimally-sized annular rings) present a low thermal-impedance path from the device into the PCB. Once into the PCB, the heat travels away from the device and into the surrounding structures and air. By increasing the number of vias, as shown in the *Layout Example* section, this interface can benefit from improved thermal performance.

注

Vias can obstruct heat flow if they are not constructed properly.

More notes on the construction and placement of vias are as follows:

- Remove thermal reliefs on thermal vias, because they impede the flow of heat through the via.
- Vias filled with thermally conductive material are best, but a simple plated via can be used to avoid the additional cost of filled vias.
- The diameter of the drull must be 8 mm or less. Also, the distance between the via barrel and the surrounding planes should be minimized to help heat flow from the via into the surrounding copper material. In all cases, minimum spacing should be determined by the voltages present on the planes surrounding the via and minimized wherever possible.
- Vias should be arranged in columns, which extend in a line radially from the heat source to the surrounding area. This arrangement is shown in the *Layout Example* section.
- Ensure that vias do not cut off power current flow from the power supply through the planes on internal layers. If needed, remove some vias that are farthest from the TAS5825P device to open up the current path to and from the device.

12.1.3.2.2 Solder Stencil

During the PCB assembly process, a piece of metal called a stencil on top of the PCB and deposits solder paste on the PCB wherever there is an opening (called an aperture) in the stencil. The stencil determines the quantity and the location of solder paste that is applied to the PCB in the electronic manufacturing process. In most cases, the aperture for each of the component pads is almost the same size as the pad itself. However, the thermal pad on the PCB is large and depositing a large, single deposition of solder paste would lead to

版权 © 2019, Texas Instruments Incorporated

Layout Guidelines (接下页)

manufacturing issues. Instead, the solder is applied to the board in multiple apertures, to allow the solder paste to outgas during the assembly process and reduce the risk of solder bridging under the device. This structure is called an aperture array, and is shown in the *Layout Example* section. It is important that the total area of the aperture array (the area of all of the small apertures combined) covers between 70% and 80% of the area of the thermal pad itself.

12.2 Layout Example

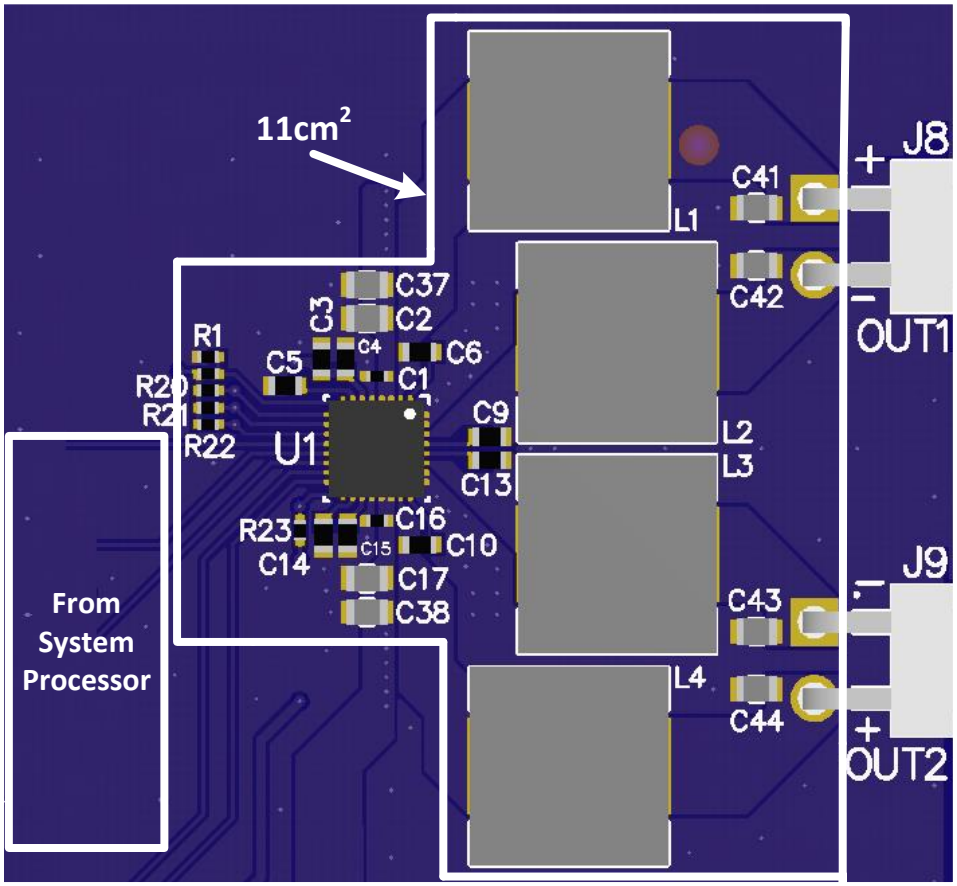

图 172. 2.0 (Stereo BTL) 3-D View

Layout Example (接下页)

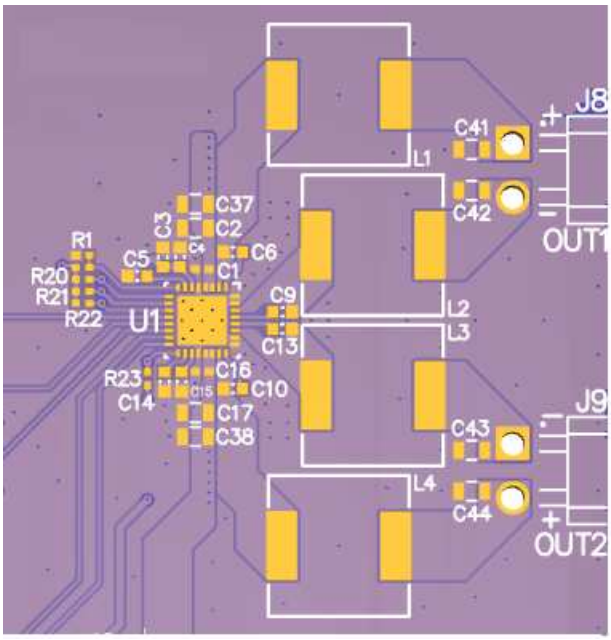

图 173. 2.0 (Stereo BTL) Top Copper View

版权 © 2019, Texas Instruments Incorporated

13 器件和文档支持

13.1 器件支持

13.1.1 器件命名规则

Glossary 部分列出的是一个通用的术语表，其中包括常用的缩写和词语，它们都是根据一个范围广泛的 TI 计划定义的，符合 JEDEC、IPC、IEEE 等行业标准。本部分提供的术语表定义了特定于本产品和文档、附属产品或本产品使用的支持工具和软件的词语和缩写。如对定义和术语有其他疑问，请访问 e2e 音频放大器论坛。

桥接式负载 **(BTL)** 是一种输出配置，其中扬声器的两端分别连接一个半桥。

DUT 是指*被测器件*，用于区分不同的器件。

闭环架构是一种拓扑结构，其中放大器监视输出端子、对比输出信号与输入信号，并尝试修正输出信号的非线性。

动态控件是指系统或最终用户在正常使用时可更改的控件。

GPIO 是通用输入/输出引脚。该引脚是一个高度可配置的双向数字引脚，可执行系统所需的多种功能。

主机处理器（也称系统处理器、标量、主机或系统控制器）是指用作中央系统控制器的器件，可为与其连接的器件提供控制信息，还可以从上游器件采集音频源数据并将其分配给其他器件。该器件通常配置音频路径中音频处理器件（如 TAS5825P）的控件，从而根据频率响应、时间校准、目标声压级、系统安全工作区域和用户偏好优化扬声器的音频输出。

最大持续输出功率是指放大器在 25°C 运行环境温度下可持续（不关断）提供的最大输出功率。测试该参数时，要求温度达到热平衡点且不再升高

并联桥接式负载 **(PBTL)** 是一种输出配置，其中扬声器的两端分别连接一对并行放置的半桥

$r_{DS(on)}$ 是指放大器输出级中所用 MOSFET 的导通电阻。

静态控件/静态配置是指系统正常使用时不发生变化的控件。

过孔是指 PCB 中的镀铜通孔。

13.1.2 开发支持

有关 RDGUI 软件，请咨询当地的现场支持工程师。

13.2 接收文档更新通知

要接收文档更新通知，请导航至 ti.com. 上的器件产品文件夹。单击右上角的*通知我*进行注册，即可每周接收产品信息更改摘要。有关更改的详细信息，请查看任何已修订文档中包含的修订历史记录。

13.3 社区资源

TI E2E™ support forums are an engineer's go-to source for fast, verified answers and design help — straight from the experts. Search existing answers or ask your own question to get the quick design help you need.

Linked content is provided "AS IS" by the respective contributors. They do not constitute TI specifications and do not necessarily reflect TI's views; see TI's Terms of Use.

13.4 商标

PowerPAD, E2E are trademarks of Texas Instruments.
All other trademarks are the property of their respective owners.

13.5 静电放电警告

这些装置包含有限的内置 ESD 保护。 存储或装卸时，应将导线一起截短或将装置放置于导电泡棉中，以防止 MOS 门极遭受静电损伤。

13.6 Glossary

SLYZ022 — *TI Glossary*.

This glossary lists and explains terms, acronyms, and definitions.

14 机械、封装和可订购信息

以下页面包含机械、封装和可订购信息。这些信息是指定器件的最新可用数据。数据如有变更，恕不另行通知，且不会对此文档进行修订。如需获取此数据表的浏览器版本，请查阅左侧的导航栏。

版权 © 2019, Texas Instruments Incorporated

PACKAGING INFORMATION

Orderable Device	Status (1)	Package Type	Package Drawing	Pins	Package Qty	Eco Plan (2)	Lead finish/ Ball material (6)	MSL Peak Temp (3)	Op Temp (°C)	Device Marking (4/5)	Samples
TAS5825PRHBR	ACTIVE	VQFN	RHB	32	3000	RoHS & Green	NIPDAU	Level-2-260C-1 YEAR	-25 to 85	5825P	Samples

(1) The marketing status values are defined as follows:
ACTIVE: Product device recommended for new designs.
LIFEBUY: TI has announced that the device will be discontinued, and a lifetime-buy period is in effect.
NRND: Not recommended for new designs. Device is in production to support existing customers, but TI does not recommend using this part in a new design.
PREVIEW: Device has been announced but is not in production. Samples may or may not be available.
OBSOLETE: TI has discontinued the production of the device.

(2) **RoHS:** TI defines "RoHS" to mean semiconductor products that are compliant with the current EU RoHS requirements for all 10 RoHS substances, including the requirement that RoHS substance do not exceed 0.1% by weight in homogeneous materials. Where designed to be soldered at high temperatures, "RoHS" products are suitable for use in specified lead-free processes. TI may reference these types of products as "Pb-Free".
RoHS Exempt: TI defines "RoHS Exempt" to mean products that contain lead but are compliant with EU RoHS pursuant to a specific EU RoHS exemption.
Green: TI defines "Green" to mean the content of Chlorine (Cl) and Bromine (Br) based flame retardants meet JS709B low halogen requirements of <=1000ppm threshold. Antimony trioxide based flame retardants must also meet the <=1000ppm threshold requirement.

(3) MSL, Peak Temp. - The Moisture Sensitivity Level rating according to the JEDEC industry standard classifications, and peak solder temperature.

(4) There may be additional marking, which relates to the logo, the lot trace code information, or the environmental category on the device.

(5) Multiple Device Markings will be inside parentheses. Only one Device Marking contained in parentheses and separated by a "~" will appear on a device. If a line is indented then it is a continuation of the previous line and the two combined represent the entire Device Marking for that device.

(6) Lead finish/Ball material - Orderable Devices may have multiple material finish options. Finish options are separated by a vertical ruled line. Lead finish/Ball material values may wrap to two lines if the finish value exceeds the maximum column width.

Important Information and Disclaimer: The information provided on this page represents TI's knowledge and belief as of the date that it is provided. TI bases its knowledge and belief on information provided by third parties, and makes no representation or warranty as to the accuracy of such information. Efforts are underway to better integrate information from third parties. TI has taken and continues to take reasonable steps to provide representative and accurate information but may not have conducted destructive testing or chemical analysis on incoming materials and chemicals. TI and TI suppliers consider certain information to be proprietary, and thus CAS numbers and other limited information may not be available for release.

In no event shall TI's liability arising out of such information exceed the total purchase price of the TI part(s) at issue in this document sold by TI to Customer on an annual basis.

TAPE AND REEL INFORMATION

REEL DIMENSIONS

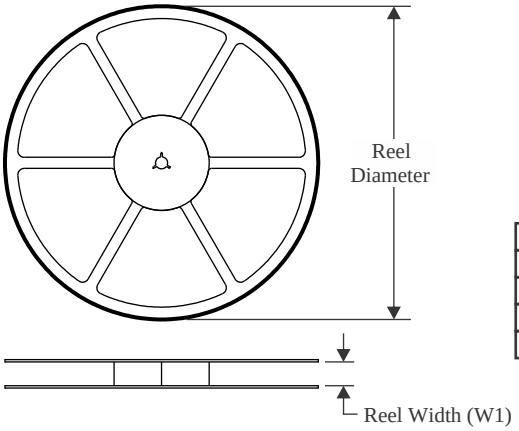

TAPE DIMENSIONS

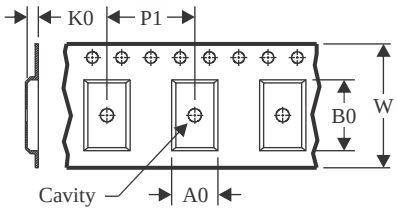

A0	Dimension designed to accommodate the component width
B0	Dimension designed to accommodate the component length
K0	Dimension designed to accommodate the component thickness
W	Overall width of the carrier tape
P1	Pitch between successive cavity centers

QUADRANT ASSIGNMENTS FOR PIN 1 ORIENTATION IN TAPE

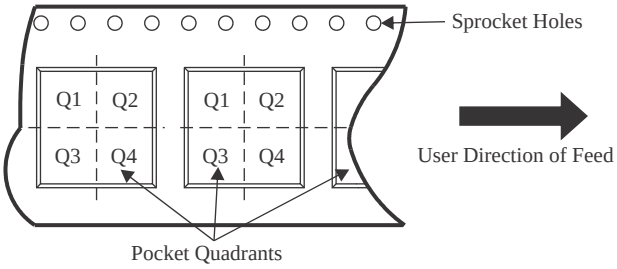

*All dimensions are nominal

Device	Package Type	Package Drawing	Pins	SPQ	Reel Diameter (mm)	Reel Width W1 (mm)	A0 (mm)	B0 (mm)	K0 (mm)	P1 (mm)	W (mm)	Pin1 Quadrant
TAS5825PRHBR	VQFN	RHB	32	3000	330.0	12.4	5.3	5.3	1.1	8.0	12.0	Q2

TAPE AND REEL BOX DIMENSIONS

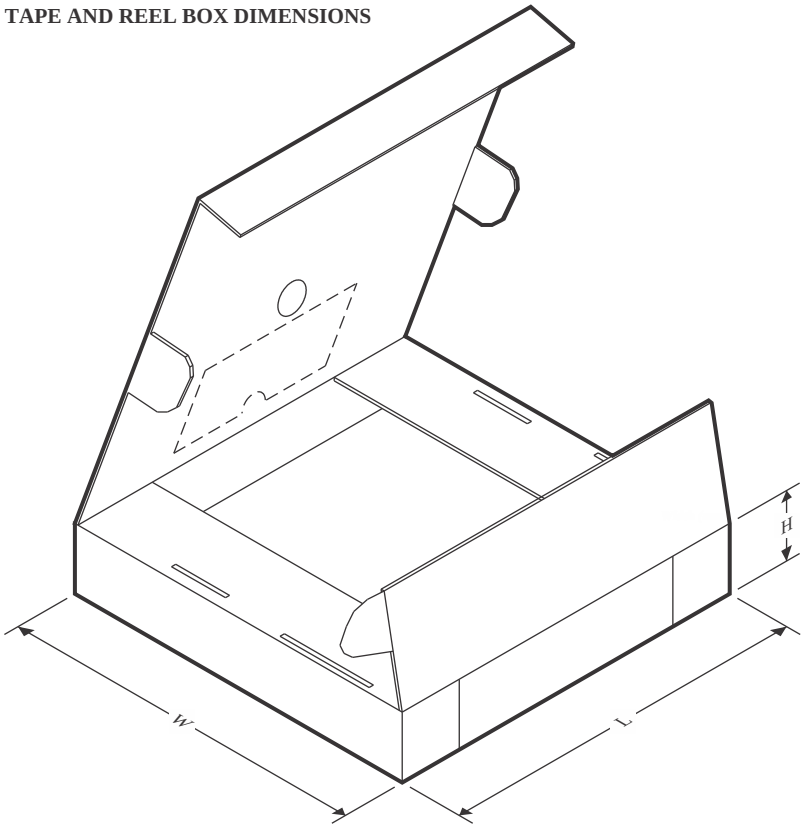

*All dimensions are nominal

Device	Package Type	Package Drawing	Pins	SPQ	Length (mm)	Width (mm)	Height (mm)
TAS5825PRHBR	VQFN	RHB	32	3000	367.0	367.0	35.0

GENERIC PACKAGE VIEW

RHB 32

VQFN - 1 mm max height

5 x 5, 0.5 mm pitch

PLASTIC QUAD FLATPACK - NO LEAD

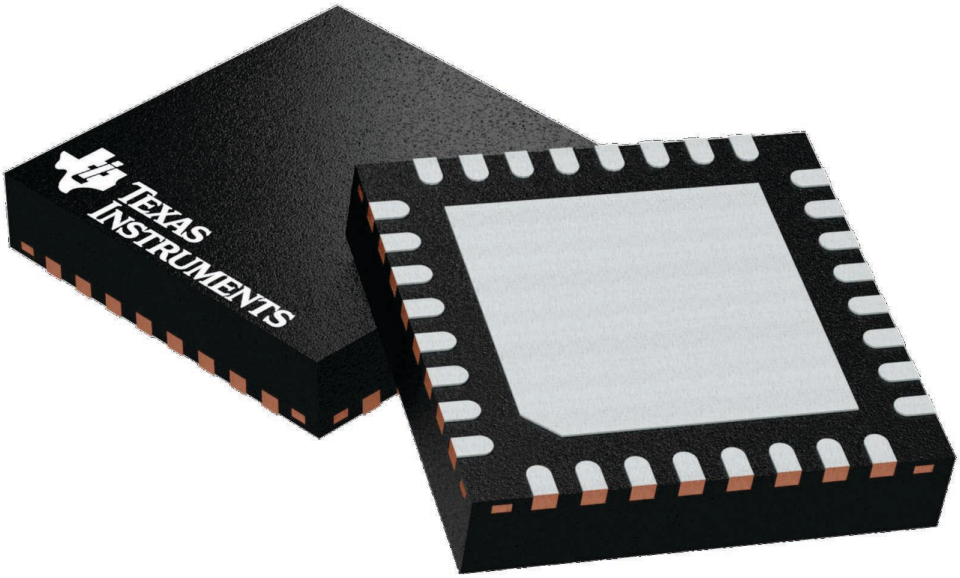

Images above are just a representation of the package family, actual package may vary.
Refer to the product data sheet for package details.

4224745/A

RHB0032E

PACKAGE OUTLINE

VQFN - 1 mm max height

PLASTIC QUAD FLATPACK - NO LEAD

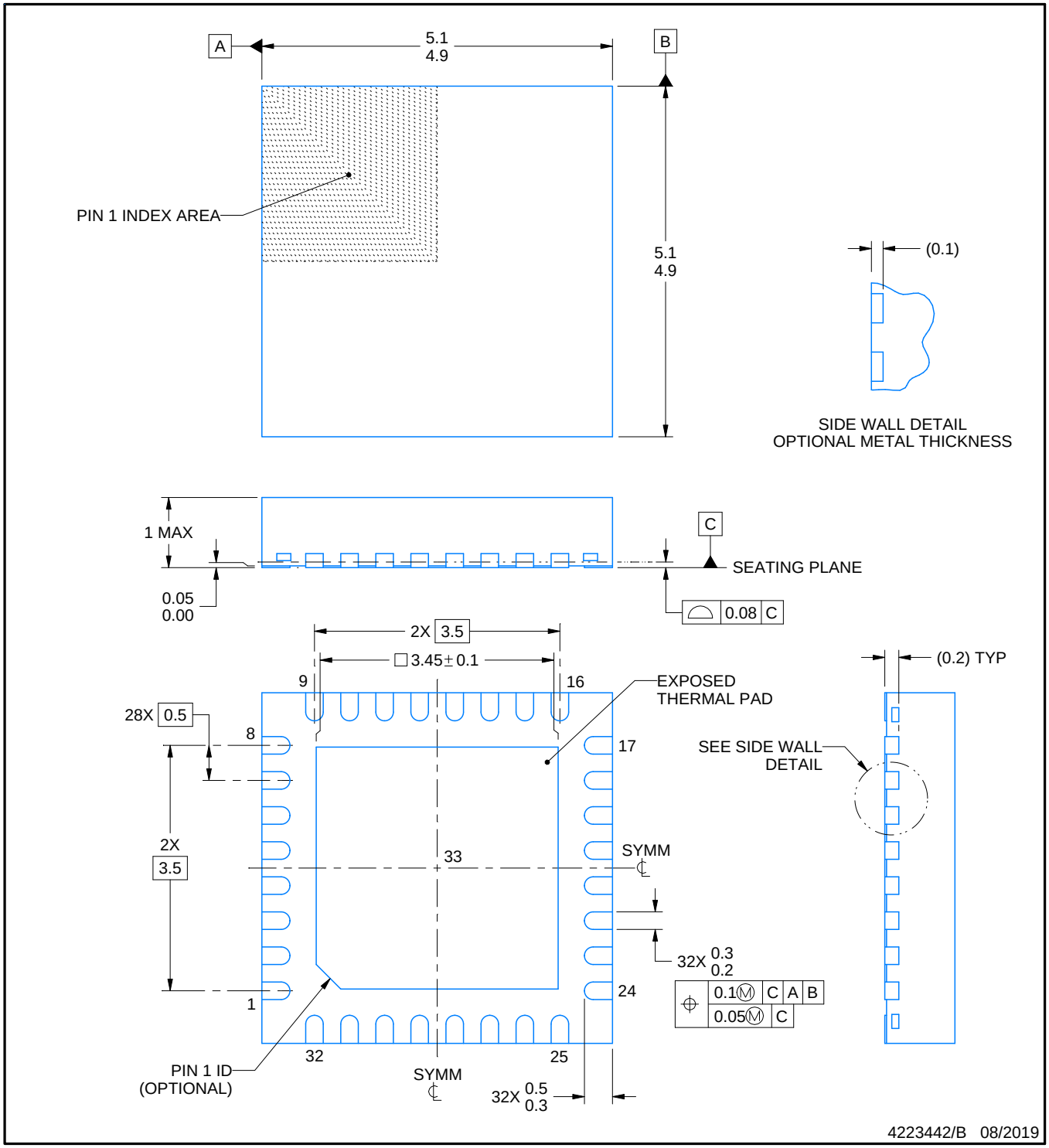

NOTES:

1. All linear dimensions are in millimeters. Any dimensions in parenthesis are for reference only. Dimensioning and tolerancing per ASME Y14.5M.
2. This drawing is subject to change without notice.
3. The package thermal pad must be soldered to the printed circuit board for thermal and mechanical performance.

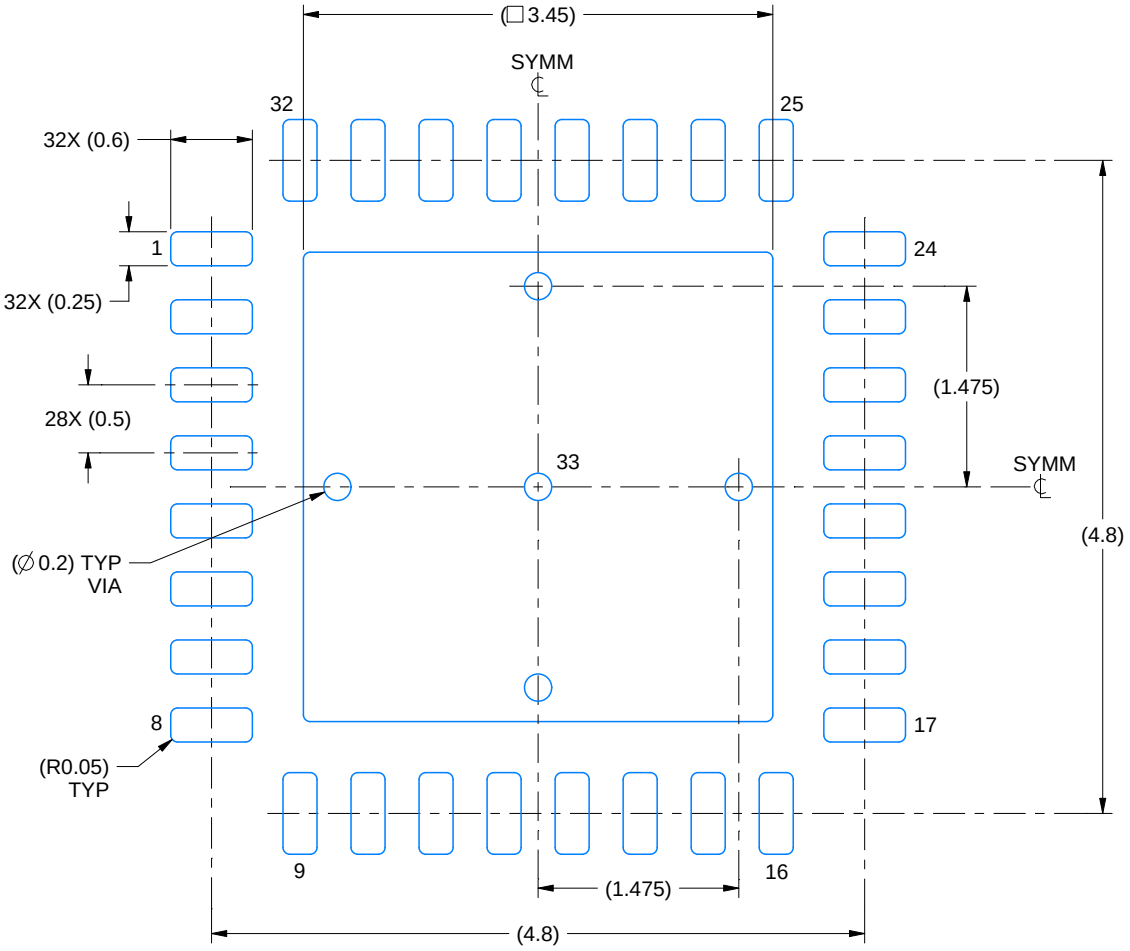

LAND PATTERN EXAMPLE
SCALE:18X

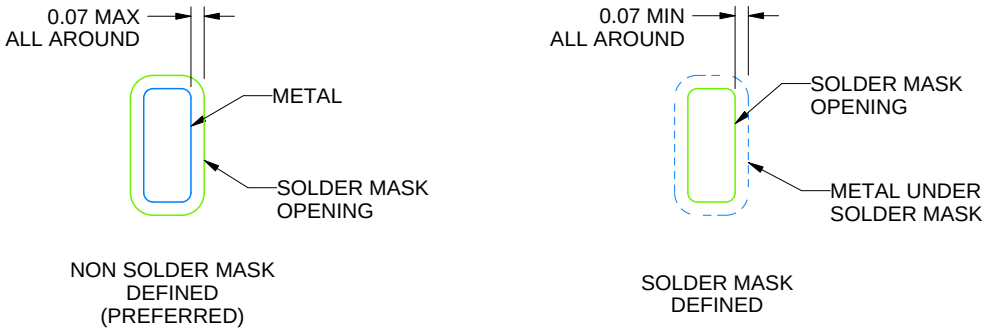

SOLDER MASK DETAILS

4223442/B 08/2019

NOTES: (continued)

4. This package is designed to be soldered to a thermal pad on the board. For more information, see Texas Instruments literature number SLUA271 (www.ti.com/lit/slua271).
5. Vias are optional depending on application, refer to device data sheet. If any vias are implemented, refer to their locations shown on this view. It is recommended that vias under paste be filled, plugged or tented.

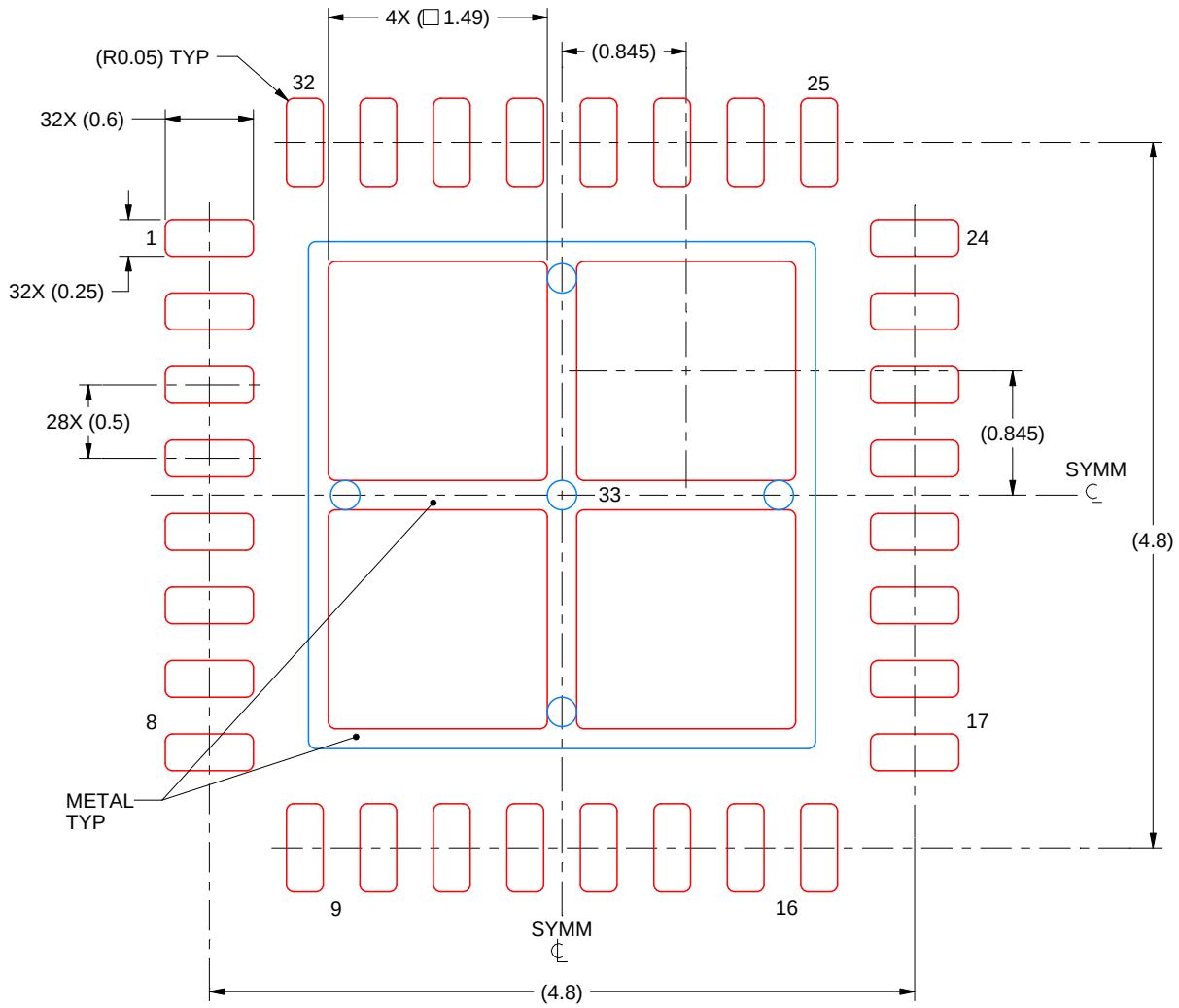

SOLDER PASTE EXAMPLE
BASED ON 0.125 mm THICK STENCIL

EXPOSED PAD 33:
75% PRINTED SOLDER COVERAGE BY AREA UNDER PACKAGE
SCALE:20X

4223442/B 08/2019

NOTES: (continued)

6. Laser cutting apertures with trapezoidal walls and rounded corners may offer better paste release. IPC-7525 may have alternate design recommendations.

重要声明和免责声明

TI“按原样”提供技术和可靠性数据（包括数据表）、设计资源（包括参考设计）、应用或其他设计建议、网络工具、安全信息和其他资源，不保证没有瑕疵且不做出任何明示或暗示的担保，包括但不限于对适销性、某特定用途方面的适用性或不侵犯任何第三方知识产权的暗示担保。

这些资源可供使用 TI 产品进行设计的熟练开发人员使用。您将自行承担以下全部责任：(1) 针对您的应用选择合适的 TI 产品，(2) 设计、验证并测试您的应用，(3) 确保您的应用满足相应标准以及任何其他功能安全、信息安全、监管或其他要求。

这些资源如有变更，恕不另行通知。TI 授权您仅可将这些资源用于研发本资源所述的 TI 产品的应用。严禁对这些资源进行其他复制或展示。您无权使用任何其他 TI 知识产权或任何第三方知识产权。您应全额赔偿因在这些资源的使用中对 TI 及其代表造成的任何索赔、损害、成本、损失和债务，TI 对此概不负责。

TI 提供的产品受 TI 的销售条款或 ti.com 上其他适用条款/TI 产品随附的其他适用条款的约束。TI 提供这些资源并不会扩展或以其他方式更改 TI 针对 TI 产品发布的适用的担保或担保免责声明。

TI 反对并拒绝您可能提出的任何其他或不同的条款。

邮寄地址：Texas Instruments, Post Office Box 655303, Dallas, Texas 75265
Copyright © 2022，德州仪器 (TI) 公司