THS7530 高速、全差分、连续可变增益放大器

1 特性

- 低噪声：V_n = 1.1nV/√Hz，噪声系数 = 9dB
- 低失真：
  - 频率为 32MHz 时：HD_2 = –65dBc，HD_3 = –61dBc
  - 频率为 70MHz 时：IMD_3 = –62dBc，OIP_3 = 21dBm
- 300MHz 带宽
- 连续可变增益范围：11.6dB 至 46.5dB
- 增益斜率：38.8dB/V
- 全差分输入和输出
- 输出共模电压控制
- 输出电压限制

2 应用

- 超声波应用、声纳和雷达中的时间增益放大器
- 通信和和视频中的自动增益控制
- 通信中的系统增益校准
- 仪表中的可变增益

3 说明

THS7530 器件采用德州仪器 (TI) 先进的 BiCom III SiGe 互补双极工艺制造。THS7530 是一款带有压控增益的直流耦合高带宽放大器。该放大器具有高阻抗差分输入和低阻抗差分输出，提供高带宽增益控制、输出共模控制和输出电压钳位功能。

该器件在 300MHz 带宽下的动态性能优异。当频率为 32MHz，同时将 1 V_{PP} 输出施加于 400Ω 负载，三次谐波失真为 –61dBc。

增益控制（单位：dB）呈线性变化。在 0V 至 0.9V 电压范围内，增益以 38.8dB/V 的斜率由 11.6dB 变化为 46.5dB。

输出电压限制功能用于限制输出电压摆幅并避免后续级发生饱和。

该器件可在工业级温度范围内（–40°C 至 +85°C）额定运行。

器件信息(1)

器件型号	封装	封装尺寸（标称值）
THS7530	HTSSOP (14)	5.00mm x 4.40mm

(1) 要了解所有可用封装，请见数据表末尾的可订购产品附录。

典型应用电路

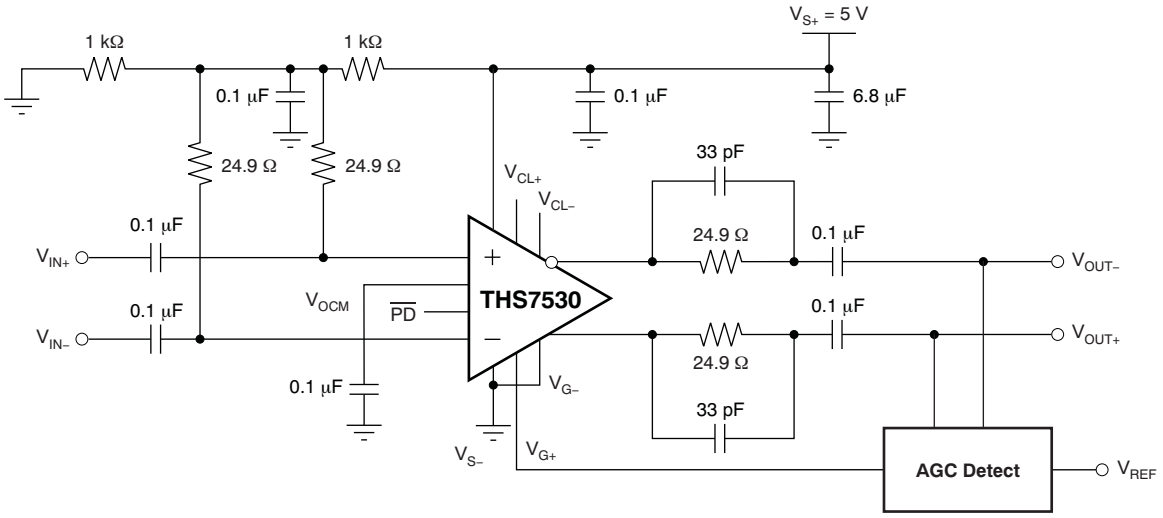

An IMPORTANT NOTICE at the end of this data sheet addresses availability, warranty, changes, use in safety-critical applications, intellectual property matters and other important disclaimers. PRODUCTION DATA.

目录

1 特性 ... 1
2 应用 ... 1
3 说明 ... 1
4 修订历史记录 ... 2
5 **Pin Configuration and Functions** ... 3
6 **Specifications** ... 4
6.1 Absolute Maximum Ratings ... 4
6.2 ESD Ratings ... 4
6.3 Recommended Operating Conditions ... 4
6.4 Thermal Information ... 4
6.5 Electrical Characteristics: Main Amplifier ... 5
6.6 Package Thermal Data ... 6
6.7 Typical Characteristics ... 7
7 **Parameter Measurement Information** ... 10
7.1 Test Circuits ... 10
8 **Detailed Description** ... 11
8.1 Overview ... 11
8.2 Functional Block Diagram ... 11
8.3 Feature Description ... 11
8.4 Device Functional Modes ... 12
9 **Application and Implementation** ... 13
9.1 Application Information ... 13
9.2 Typical Application ... 15
10 **Power Supply Recommendations** ... 17
11 **Layout** ... 18
11.1 Layout Guidelines ... 18
11.2 Layout Examples ... 20
12 器件和文档支持 ... 22
12.1 器件支持 ... 22
12.2 文档支持 ... 22
12.3 社区资源 ... 22
12.4 商标 ... 22
12.5 静电放电警告 ... 22
12.6 Glossary ... 22
13 机械、封装和可订购信息 ... 22

4 修订历史记录

注：之前版本的页码可能与当前版本有所不同。

Changes from Revision C (February 2010) to Revision D	Page
• 已添加 *ESD 额定值表*，*特性 描述部分*，*器件功能模式*，*应用和实施部分*，*电源相关建议部分*，*布局部分*，*器件和文档支持部分以及机械、封装和可订购信息部分*	1

Changes from Revision B (February 2006) to Revision C	Page
• 已更正首页图中的输入和输出极性指示	1
• Deleted *lead temperature* specification from Absolute Maximum Ratings table	4
• Corrected Figure 17	10
• Changed Figure 19 and Figure 20 to correct problem with output polarity indication	13
• Changed Figure 21 and Figure 22 to correct problem with output polarity indication	14

Copyright © 2002–2015, Texas Instruments Incorporated

5 Pin Configuration and Functions

PWP Package
14-Pin HTSSOP With PowerPAD™
Top View

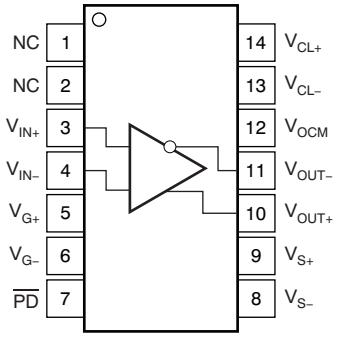

Pin Functions

PIN		I/O	DESCRIPTION
NAME	NO.		
NC	1	—	No internal connection
	2		
$\overline{PD}$	7	—	Power down, $\overline{PD}$ = logic low puts the device into low power mode; $\overline{PD}$ = logic high or open for normal operation
V_{CL-}	13	I	Output negative clamp voltage input
V_{CL+}	14	I	Output positive clamp voltage input
V_{G-}	6	I	Gain setting negative input
V_{G+}	5	I	Gain setting positive input
V_{IN-}	4	I	Inverting amplifier input
V_{IN+}	3	I	Noninverting amplifier input
V_{OCM}	12	I	Output common-mode voltage input
V_{OUT-}	11	O	Inverted amplifier output
V_{OUT+}	10	O	Noninverted amplifier output
V_{S-}	8	I	Negative amplifier power-supply input
V_{S+}	9	I	Positive amplifier power-supply input

Copyright © 2002–2015, Texas Instruments Incorporated

6 Specifications

6.1 Absolute Maximum Ratings

Over operating free-air temperature range, unless otherwise noted.[1]

		MIN	MAX	UNIT
$V_{S+} – V_{S–}$	Supply voltage		5.5	V
V_I	Input voltage		$±V_S$	V
I_O	Output current		65	mA
V_{ID}	Differential input voltage		±4	V
	Continuous power dissipation	See *Thermal Information*		
T_J	Maximum junction temperature		150	°C
	Maximum junction temperature for long term stability[2]		125	°C
T_{stg}	Storage temperature	–65	150	°C

(1) Stresses beyond those listed under *Absolute Maximum Ratings* may cause permanent damage to the device. These are stress ratings only, which do not imply functional operation of the device at these or any other conditions beyond those indicated under *Recommended Operating Conditions*. Exposure to absolute-maximum-rated conditions for extended periods may affect device reliability.
(2) The maximum junction temperature for continuous operation is limited by package constraints. Operation above this temperature may result in reduced reliability and/or lifetime of the device.

6.2 ESD Ratings

		VALUE	UNIT
$V_{(ESD)}$ Electrostatic discharge	Human body model (HBM), per ANSI/ESDA/JEDEC JS-001[1]	±3000	V
	Charged device model (CDM), per JEDEC specification JESD22-C101[2]	±1500	
	Machine model (MM)	±200	

(1) JEDEC document JEP155 states that 500-V HBM allows safe manufacturing with a standard ESD control process.
(2) JEDEC document JEP157 states that 250-V CDM allows safe manufacturing with a standard ESD control process.

6.3 Recommended Operating Conditions

			MIN	NOM	MAX	UNIT
$[V_{S–}$ to $V_{S+}]$	Supply voltage		4.5	5	5.5	V
	Input common mode voltage	$[V_{S–}$ to $V_{S+}] = 5$ V		2.5		V
	Output common mode voltage	$[V_{S–}$ to $V_{S+}] = 5$ V		2.5		V
T_A	Operating free-air temperature		–40		85	°C

6.4 Thermal Information

THERMAL METRIC[1]		THS7530 PWP (HTSSOP) 14 PINS	UNIT
$R_{θJA}$	Junction-to-ambient thermal resistance	50.4	°C/W
$R_{θJC(top)}$	Junction-to-case (top) thermal resistance	34.9	°C/W
$R_{θJB}$	Junction-to-board thermal resistance	29	°C/W
$ψ_{JT}$	Junction-to-top characterization parameter	1.6	°C/W
$ψ_{JB}$	Junction-to-board characterization parameter	28.7	°C/W
$R_{θJC(bot)}$	Junction-to-case (bottom) thermal resistance	3.2	°C/W

(1) For more information about traditional and new thermal metrics, see the *Semiconductor and IC Package Thermal Metrics* application report, SPRA953.

Copyright © 2002–2015, Texas Instruments Incorporated

6.5 Electrical Characteristics: Main Amplifier

V_{S+} = 5 V, V_{S-} = 0 V, V_{OCM} = 2.5 V, V_{ICM} = 2.5 V, V_{G-} = 0 V, V_{G+} = 1 V (maximum gain), T_A = 25°C, AC performance measured using the AC test circuit shown in Figure 16 (unless otherwise noted). DC performance is measured using the DC test circuit shown in Figure 17 (unless otherwise noted)

PARAMETER	TEST CONDITIONS	MIN	TYP	MAX	UNIT
AC PERFORMANCE					
Small-signal bandwidth	All gains, P_{IN} = –45 dBm		300		MHz
Slew rate (1)	1-V_{PP} Step, 25% to 75%, minimum gain		1250		V/µs
Settling time to 1% (1)	1-V_{PP} Step, minimum gain		11		ns
Harmonic distortion, 2nd harmonic	f = 32 MHz, $V_{O(PP)}$ = 1 V, $R_{L(diff)}$= 400 Ω		–65		dBc
Harmonic distortion, 3rd harmonic	f = 32 MHz, $V_{O(PP)}$ = 1 V, $R_{L(diff)}$= 400 Ω		–61		dBc
Third-order intermodulation distortion	P_O = –10 dBm each tone, f_C= 70 MHz, 200-kHz tone spacing		–62		dBc
Third-order output intercept point	f_C= 70 MHz, 200-kHz tone spacing		21		dBm
Noise figure (with input termination)	Source impedance: 50 Ω		9		dB
Total input voltage noise	f > 100 kHz		1.1		nV/√Hz
DC PERFORMANCE—INPUTS					
Input bias current	T_A = 25°C		20	39	µA
	T_A = –40°C to +85°C			40	
Input bias current offset			<150		pA
Minimum input voltage	Minimum gain, T_A = 25°C		1.5	1.6	V
	Minimum gain, T_A = –40°C to +85°C			1.7	
Maximum input voltage	Minimum gain, T_A = 25°C	3.35	3.5		V
	Minimum gain, T_A = –40°C to +85°C	3.2			
Common-mode rejection ratio	T_A = 25°C	56	114		dB
	T_A = –40°C to +85°C	44			
Differential input impedance			8.5 || 3		kΩ || pF
DC PERFORMANCE—OUTPUTS					
Output offset voltage	All gains, T_A = 25°C		±100	±340	mV
	All gains, T_A = –40°C to +85°C			±480	
Maximum output voltage high	T_A = 25°C	3.275	3.5		V
	T_A = –40°C to +85°C	3.25			
Minimum output voltage low	T_A = 25°C		1.5	1.7	V
	T_A = –40°C to +85°C			1.8	
Output current	T_A = 25°C	±16	±37		mA
	T_A = –40°C to +85°C	±16			
Output impedance			15		Ω
OUTPUT COMMON-MODE VOLTAGE CONTROL					
Small-signal bandwidth			32		MHz
Gain			1		V/V
Common-mode offset voltage	T_A = 25°C		4.5	12	mV
	T_A = –40°C to +85°C			13.8	
Minimum input voltage			1.75		V
Maximum input voltage			3.25		V
Input impedance			25 || 1		kΩ || pF
Default voltage, with no connect			2.5		V
Input bias current			<1		µA
GAIN CONTROL					
Gain control differential voltage range	V_{G+}		0 to 1		V
Minus gain control voltage	V_{G-} – V_{S-}		–0.6 to 0.8		V
Minimum gain	V_{G+} = 0 V		11.6		dB
Maximum gain	V_{G+} = 0.9 V		46.5		dB
Gain slope	V_{G+} = 0 V to 0.9 V		38.8		dB/V

(1) Slew rate and settling time measured at amplifier output.

Copyright © 2002–2015, Texas Instruments Incorporated

Electrical Characteristics: Main Amplifier (continued)

V_{S+} = 5 V, V_{S-} = 0 V, V_{OCM} = 2.5 V, V_{ICM} = 2.5 V, V_{G-} = 0 V, V_{G+} = 1 V (maximum gain), T_A = 25°C, AC performance measured using the AC test circuit shown in Figure 16 (unless otherwise noted). DC performance is measured using the DC test circuit shown in Figure 17 (unless otherwise noted)

PARAMETER	TEST CONDITIONS	MIN	TYP	MAX	UNIT
Gain slope variation	V_{G+} = 0 V to 0.9 V		±1.5		dB/V
Gain error	V_{G+} = 0 V to 0.15 V		±4		dB
	V_{G+} = 0.15 V to 0.9 V		±2.25		
Gain control input bias current			<1		µA
Gain control input resistance			40		kΩ
Gain control bandwidth	Small signal –3 dB		15		MHz
VOLTAGE CLAMPING					
Output voltages ($V_{OUT±}$) relative to clamp voltages ($V_{CL±}$)	Device In voltage limiting mode, T_A = 25°C		±25	±38	mV
	Device In voltage limiting mode, T_A = –40°C to +85°C			±60	
Clamp voltage ($V_{CL±}$) input resistance	Device in voltage limiting mode		3.3		kΩ
Clamp voltage ($V_{CL±}$) limits			V_{S-} to V_{S+}		V
POWER SUPPLY					
Specified operating voltage	T_A = 25°C		5	5.5	V
	T_A = –40°C to +85°C			5.5	
Maximum quiescent current	T_A = 25°C		40	48	mA
	T_A = –40°C to +85°C			49	
Power supply rejection (±PSRR)	T_A = 25°C	70	77		dB
	T_A = –40°C to +85°C	45			
POWER DOWN					
Enable voltage threshold	TTL low = shut down, T_A = 25°C		1.4		V
	TTL low = shut down, T_A = –40°C to +85°C	1			
Disable voltage threshold	TTL high = normal operation, T_A = 25°C		1.4		V
	TTL high = normal operation, T_A = –40°C to +85°C			1.65	
Power-down quiescent current	T_A = 25°C		0.35	0.4	mA
	T_A = –40°C to +85°C			0.45	
Input current high	T_A = 25°C		±9	±16	µA
	T_A = –40°C to +85°C			±19	
Input current low	T_A = 25°C		±109	±116	µA
	T_A = –40°C to +85°C			±119	
Input impedance			50 || 1		kΩ || pF
Turnon time delay	Measured to 50% quiescent current		820		ns
Turnoff time delay	Measured to 50% quiescent current		500		ns
Forward isolation in power down			80		dB
Input resistance in power down			> 1		MΩ
Output resistance in power down			16		kΩ

6.6 Package Thermal Data

PACKAGE	PCB	T_A = 25°C POWER RATING (1)
PWP (14-pin) (2)	See *Layout*.	3 W

(1) This data was taken using 2 oz trace and copper pad that is soldered directly to a 3 in × 3 in PCB.
(2) The THS7530 incorporates a PowerPAD on the underside of the chip. The PowerpAD acts as a heatsink and must be connected to a thermally dissipative plane for proper power dissipation. Failure to do so may result in exceeding the maximum junction temperature which could permanently damage the device. See TI technical briefs SLMA002 and SLMA004 for more information about using the PowerPAD thermally enhanced package.

Copyright © 2002–2015, Texas Instruments Incorporated

6.7 Typical Characteristics

Measured using the AC test circuit shown in Figure 16 (unless otherwise noted).

Table 1. Table Of Graphs

		FIGURE
Voltage Gain to Load	vs Frequency (Input at 45 dBm)	Figure 1
Gain and Gain Error	vs V_{G+}	Figure 2
Noise Figure	vs Frequency	Figure 3
Output Intercept Point	vs Frequency	Figure 4
1-dB Compression Point	vs Frequency	Figure 5
Total Input Voltage Noise	vs Frequency	Figure 6
Intermodulation Distortion	vs Frequency	Figure 7
Harmonic Distortion	vs Frequency	Figure 8
S-Parameters	vs Frequency	Figure 24
Differential Input Impedance of Main Amplifier	vs Frequency	Figure 25
Differential Output Impedance of Main Amplifier	vs Frequency	Figure 9
V_{G+} Input Impedance	vs Frequency	Figure 10
V_{OCM} Input Impedance	vs Frequency	Figure 11
Common-Mode Rejection Ratio	vs Frequency	Figure 12
Step Response: 2 V_{PP}	vs Time	Figure 13
Step Response: Rising Edge	vs Time	Figure 14
Step Response: Falling Edge	vs Time	Figure 15

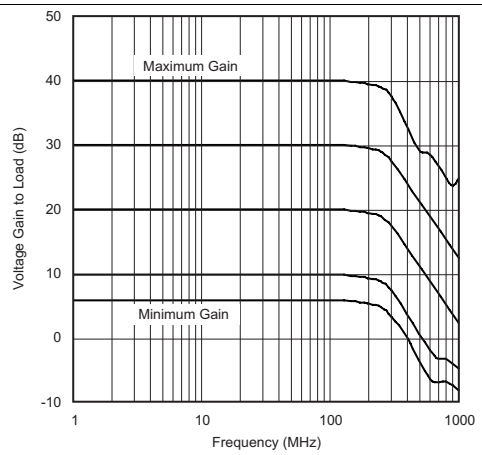

Gain is taken at load. Add 6 dB to refer to amplifier output

P_{IN} = –45 dBm

Figure 1. Voltage Gain to Load vs Frequency

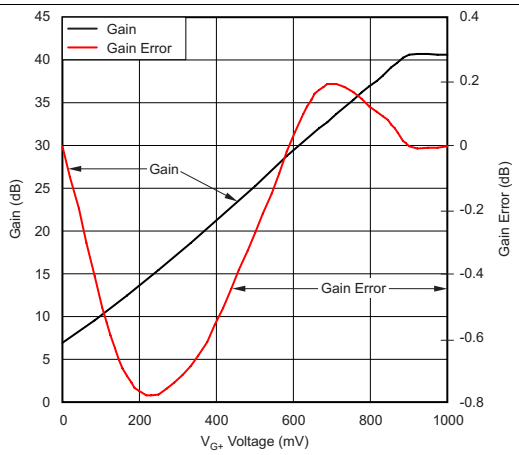

Figure 2. Gain and Gain Error vs V_{G+}

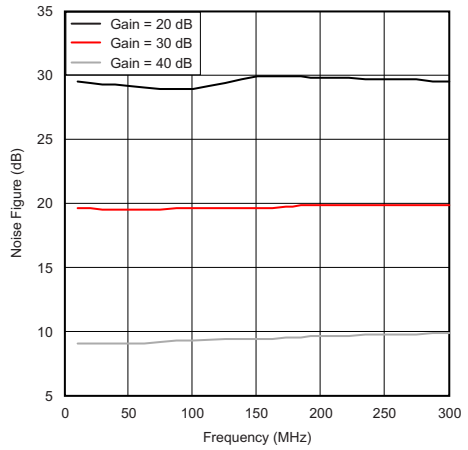

Terminated input

Figure 3. Noise Figure vs Frequency

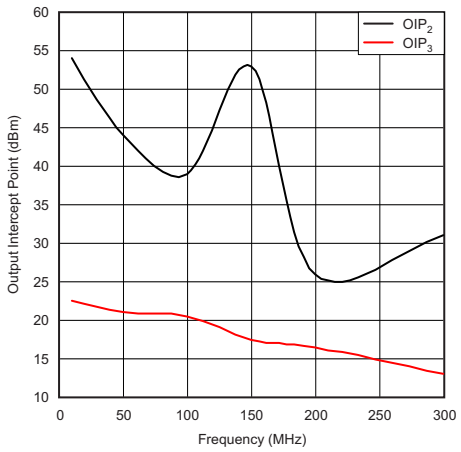

Taken at load. Add 3 dB to refer to amplifier output.

Figure 4. Output Intercept Point vs Frequency

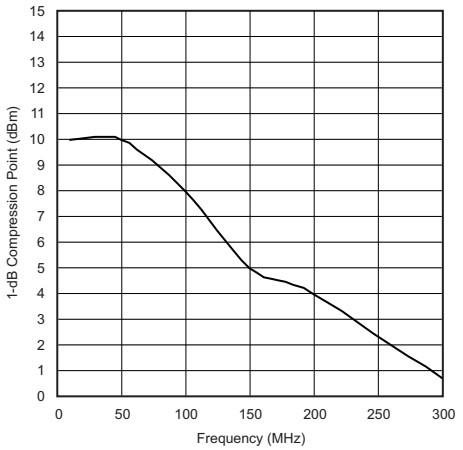

Taken at load. Add 3 dB to refer to amplifier output.

Figure 5. 1-dB Compression Point vs Frequency

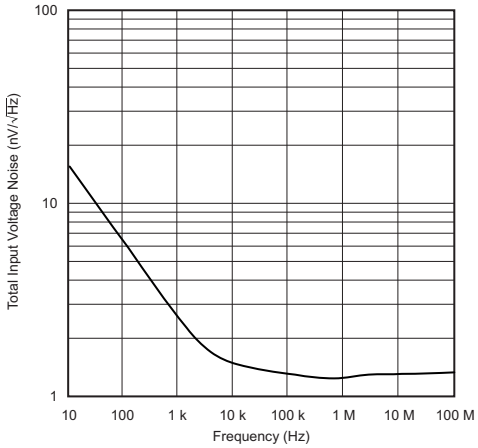

Figure 6. Total Input Voltage Noise vs Frequency

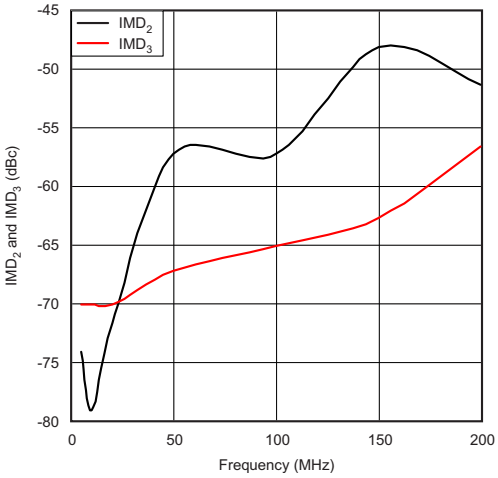

V_{G+} = 1 V V_O = 1 V_{PP} (composite) R_L = 400 Ω

Figure 7. Intermodulation Distortion vs Frequency

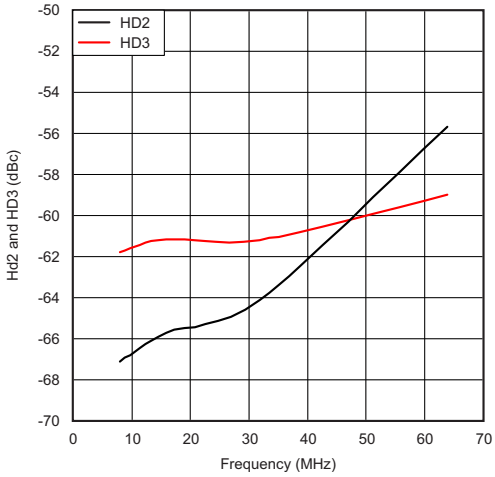

V_{G+} = 1 V V_O = 1 V_{PP} R_L = 400 Ω

Figure 8. Harmonic Distortion vs Frequency

Copyright © 2002–2015, Texas Instruments Incorporated

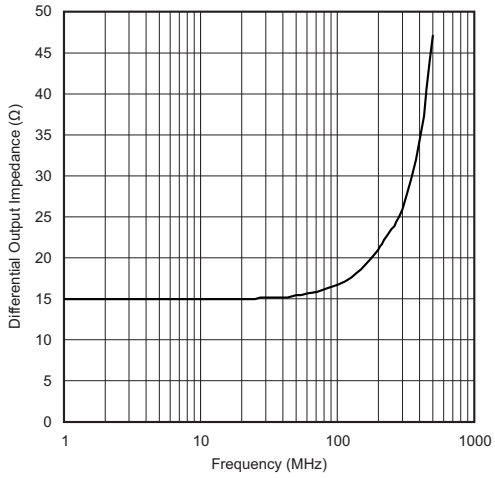

Figure 9. Differential Output Impedance of Main Amplifier vs Frequency

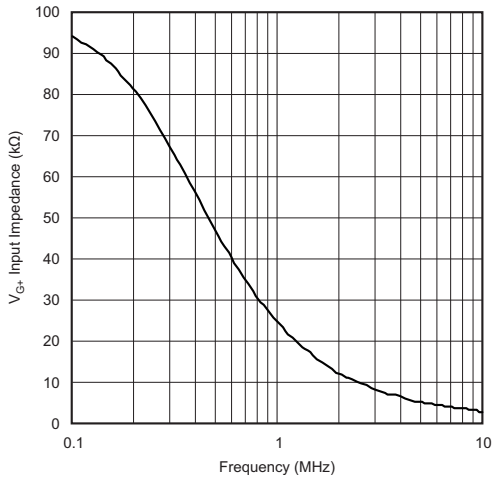

Figure 10. V_{G+} Input Impedance vs Frequency

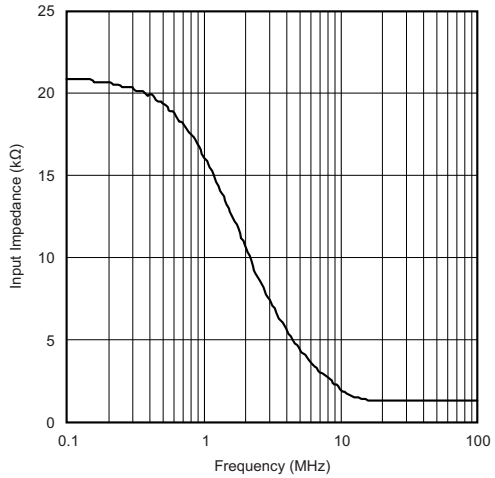

Figure 11. V_{OCM} Input Impedance vs Frequency

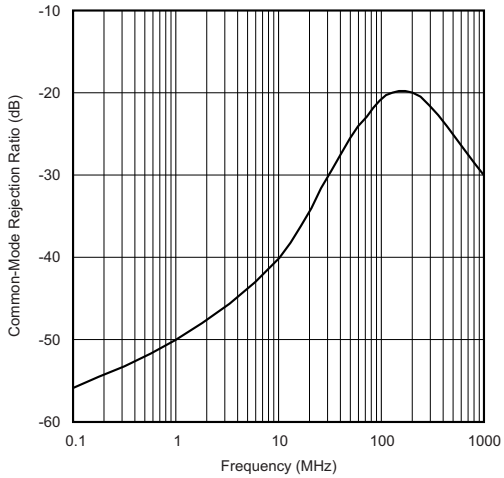

Figure 12. Common-Mode Rejection Ratio vs Frequency

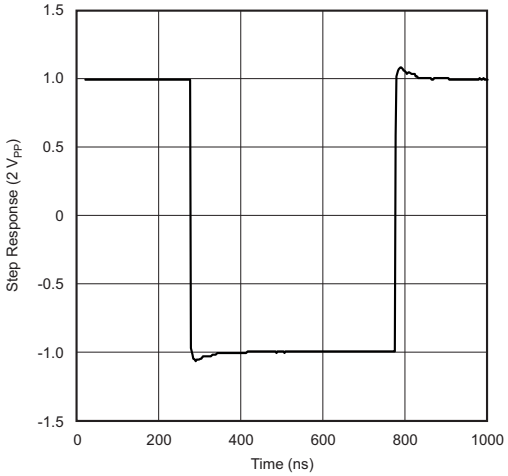

R_L = 400 Ω At amplifier output and minimum gain

Figure 13. Step Response

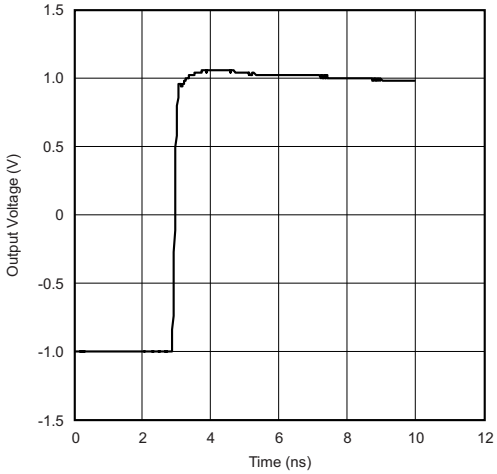

R_L = 400 Ω At amplifier output and minimum gain

Figure 14. Step Response: Rising Edge

Copyright © 2002–2015, Texas Instruments Incorporated

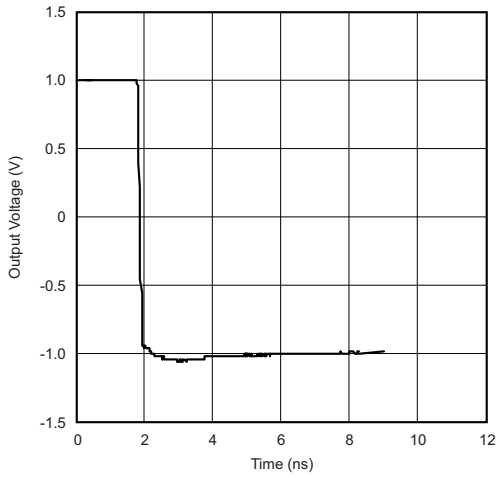

R_L = 400 Ω At amplifier output and minimum gain

Figure 15. Step Response: Falling Edge

7 Parameter Measurement Information

7.1 Test Circuits

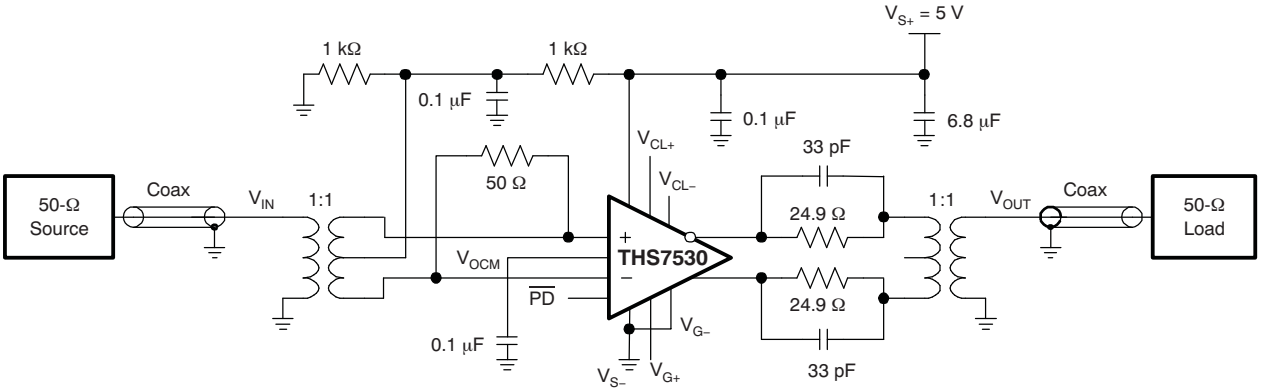

Figure 16. AC Test Circuit

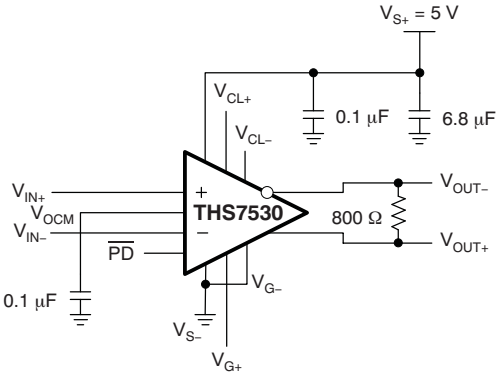

Figure 17. DC Test Circuit

Copyright © 2002–2015, Texas Instruments Incorporated

8 Detailed Description

8.1 Overview

The THS7530 device is a fully-differential amplifier with 300-MHz bandwidth and with continually-variable gain from 11.6 dB to 46.5 dB. This amplifier together with an automatic gain control (AGC) circuit will precisely established a desired amplitude at its output.

The input architecture is a modified Gilbert cell. The output from the Gilbert cell is converted to a voltage and buffered to the output as a fully-differential signal. A summing node between the outputs is used to compare the output common-mode voltage to the V_{OCM} input. The V_{OCM} error amplifier then servos the output common-mode voltage to maintain it equal to the V_{OCM} input. Left unterminated, V_{OCM} is set to midsupply by internal resistors.

The gain control input is conditioned to give linear-in-dB gain control (block H). The gain control input is a differential signal from 0 V to 0.9 V which varies the gain from 11.6 dB to 46.5 dB.

V_{CL+} and V_{CL-} provide inputs that limit the output voltage swing of the amplifier.

8.2 Functional Block Diagram

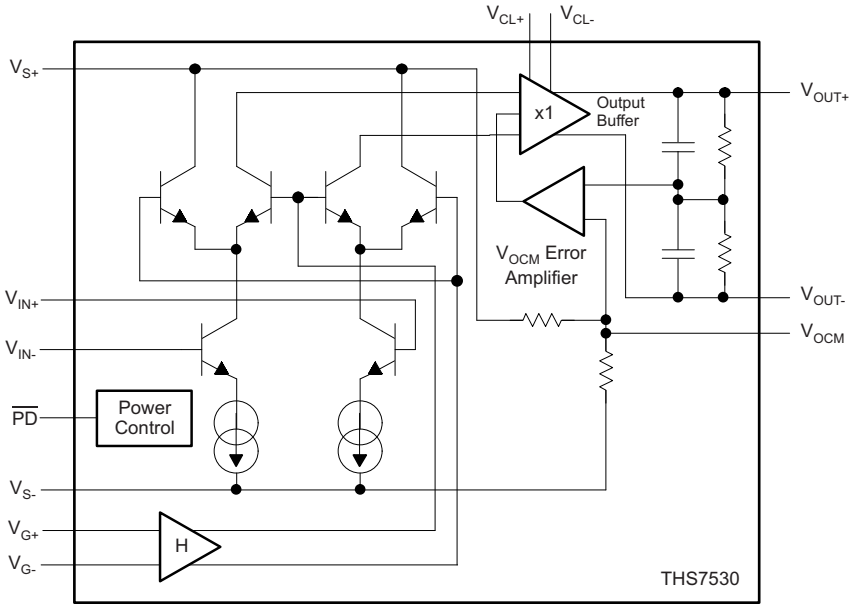

8.3 Feature Description

The main features of the THS7530 device are continually-variable gain control, common-mode voltage control, output voltage clamps, and power-down mode.

8.3.1 Continually-Variable Gain Control

The amplifier gain in dB is a linear function of the gain control voltage, which has a range of 0 V to 0.9 V. The slope of the gain control input is 38.8 dB/V with a gain range of 11.6 dB to 46.5 dB, which is 3.8 to 211.3 V/V, respectively. The bandwidth of the gain control is 15 MHz, typically.

The gain control is a differential input to reduce noise due to ground bounce, coupling, and so forth. The negative gain-control input V_{G-} can be below the negative supply by as much as 600 mV.

8.3.2 Common-Mode Voltage Control

The common-mode voltage control sets the common-mode voltage of the differential output. The gain of the control voltage is 1 V/V with a range of 1.75 V to 3.25 V above the negative supply. If unconnected, the common-mode voltage control is at mid-supply, typically 2.5 V above the negative supply. The bandwidth of the common-mode voltage control is an impressive 32 MHz.

Copyright © 2002–2015, Texas Instruments Incorporated

Feature Description (continued)

8.3.3 Output Voltage Clamps

Separate inputs, V_{CL-} and V_{CL+}, establish the minimum and maximum output voltages, respectively. The typical error of the output voltage compared to the clamp voltage is only 25 mV. This feature can be used to avoid saturating the inputs of a receiving device, thereby precluding long recovery times in the signal path.

8.3.4 Power-Down Mode

To minimize power consumption when idle, the THS7530 device has an active-low power-down control that reduces the quiescent current from 40 mA to 350 µA. The turnon delay is only 820 ns.

When in power-down mode, the THS7530 device has a 80-dB forward isolation to allow other devices to drive the same signal path with minimal interference from the idle THS7530 device.

8.4 Device Functional Modes

The THS7530 device has two functional modes: full-power mode and power-down mode. The power-down mode reduces the quiescent current of the device to 350 µA from a typical value of 40 mA.

With a turnon time of only 820 ns and a turnoff time of 500 ns, the power-down mode can be used to greatly reduce the average power consumption of the device without sacrificing system performance.

Copyright © 2002–2015, Texas Instruments Incorporated

9 Application and Implementation

NOTE

Information in the following applications sections is not part of the TI component specification, and TI does not warrant its accuracy or completeness. TI's customers are responsible for determining suitability of components for their purposes. Customers should validate and test their design implementation to confirm system functionality.

9.1 Application Information

The THS7530 device is designed to work in a wide variety of applications requiring continuously variable gain and a fully-differential signal path. The common-mode voltage control and the output voltage clamps enable the THS7530 device to drive a diverse array of receiving circuits.

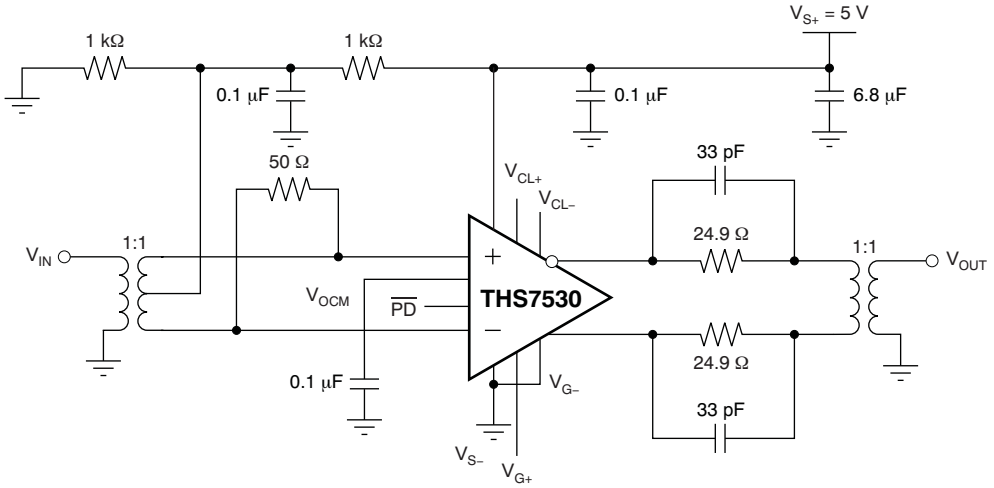

Figure 18. EVM Schematic: Designed for Use With Typical 50-Ω RF Test Equipment

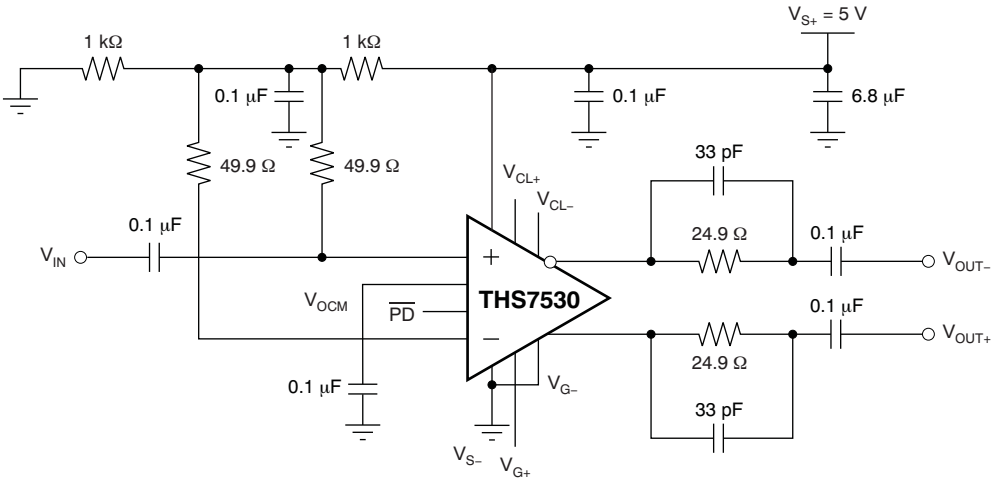

Figure 19. AC-Coupled Single-Ended Input With AC-Coupled Differential Output

Application Information (continued)

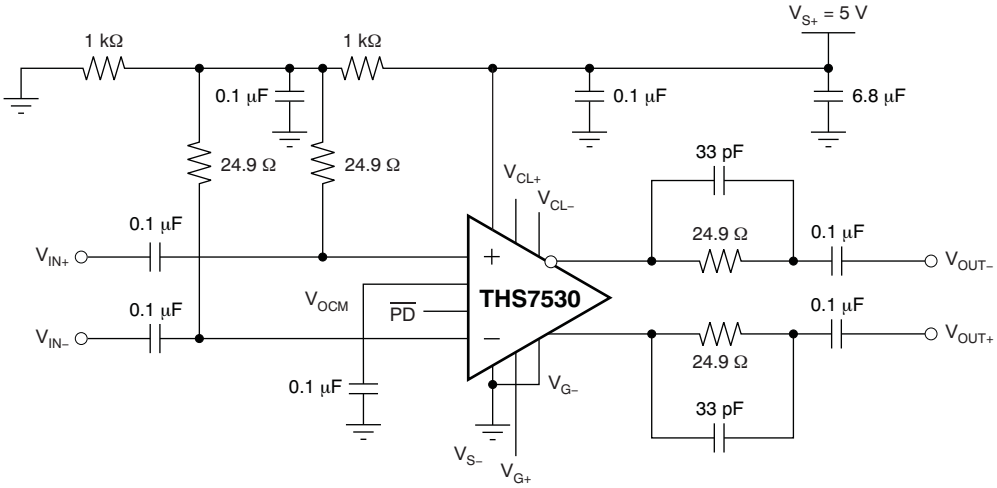

Figure 20. AC-Coupled Differential Input With AC-Coupled Differential Output

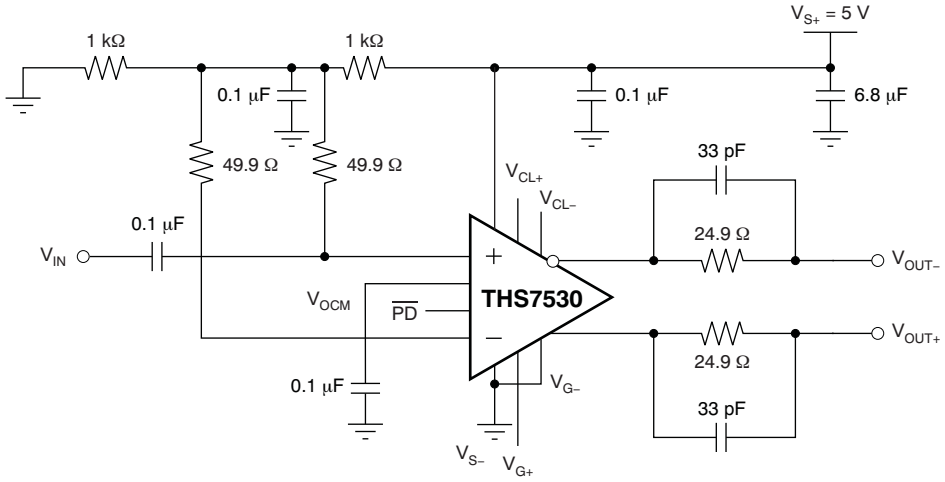

Figure 21. DC-Coupled Single-Ended Input With DC-Coupled Differential Output

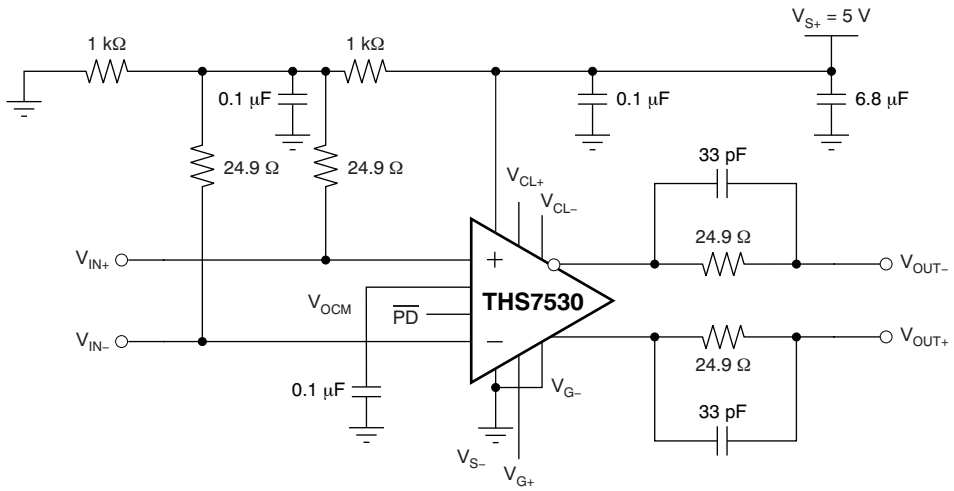

Figure 22. DC-Coupled Differential Input With DC-Coupled Differential Output

Copyright © 2002–2015, Texas Instruments Incorporated

9.2 Typical Application

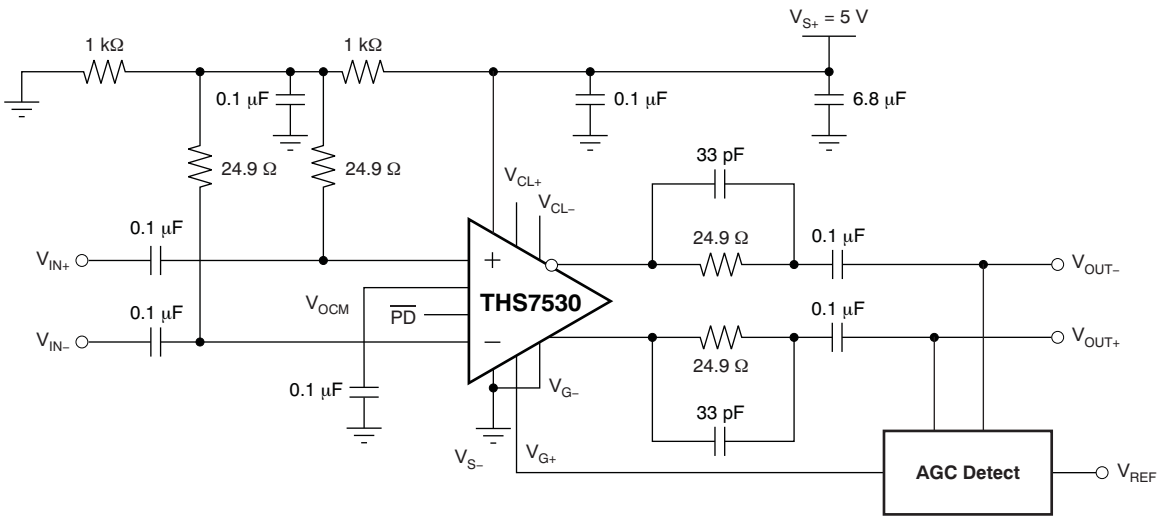

Figure 23. Typical Application Circuit

9.2.1 Design Requirements

A typical application circuit is shown in *Figure 23*. Two noteworthy aspects of this circuit are the customer's automatic gain control (AGC) circuit and the THS7530 input bias circuit.

The proper design of the AGC circuit is essential for the THS7530 device to operate properly in the customer's application. The method of detecting the amplitude of the differential output of the THS7530 device and creating the gain-control voltage, V_{G+}, from the detected amplitude and the reference amplitude, V_{ref}, are application-specific and beyond the scope of this document. The bandwidth of the amplitude of the THS7530 amplitude control is 15 MHz, which allows for rapid corrections of amplitude errors but which also allows noise from DC to 15 MHz to create an amplitude error. The trade-off between rapid amplitude correction and amplitude modulation due to noise is an important design consideration.

The input bias currents of the differential inputs of the THS7530 device are typically 20 µA. When the differential inputs are AC-coupled, the bias currents must be supplied as shown in *Figure 23*. In this circuit, the DC bias voltage is mid-supply and the AC differential input impedance is 50 Ω. The 0.1-µF capacitor between the two 24.9-Ω resistors creates an AC ground for the driving circuit.

9.2.2 Detailed Design Procedure

The THS7530 device is designed for nominal 5-V power supply from V_{S+} to V_{S-}.

The amplifier has fully differential inputs, V_{IN+} and V_{IN-}, and fully differential outputs, V_{OUT+} and V_{OUT-} The inputs are high impedance and outputs are low impedance. External resistors are recommended for impedance matching and termination purposes.

The inputs and outputs can be DC-coupled, but for best performance, the input and output common-mode voltage should be maintained at the midpoint between the two supply pins. The output common-mode voltage is controlled by the voltage applied to V_{OCM}. Left unterminated, V_{OCM} is set to midsupply by internal resistors. A 0.1-µF bypass capacitor should be placed between V_{OCM} and ground to reduce common-mode noise. The input common-mode voltage defaults to midrail when left unconnected. For voltages other than midrail, V_{OCM}must be biased by external means. V_{IN+} and V_{IN-} both require a nominal 30-µA bias current for proper operation. Therefore, ensure equal input impedance at each input to avoid generating an offset voltage that varies with gain.

Voltage applied from V_{G-} to V_{G+} controls the gain of the part with 38.8-dB/V gain slope. The input can be differential or single ended. V_{G-} must be maintained within –0.6 V and 0.8 V of $V_{S-}$for proper operation. The negative gain input should typically be tied directly to the negative power supply.

Copyright © 2002–2015, Texas Instruments Incorporated

Typical Application (continued)

V_{CL+} and V_{CL-} are inputs that limit the output voltage swing of the amplifier. The voltages applied set an absolute limit on the voltages at the output. Input voltages at V_{CL+} and V_{CL-} clamp the output, ensuring that neither output exceeds those values.

The power-down input is a TTL compatible input, referenced to the negative supply voltage. A logic low puts the THS7530 device in power-saving mode. In power-down mode the part consumes less than 1-mA current, the output goes high impedance, and a high amount of isolation is maintained between the input and output.

Power-supply bypass capacitors are required for proper operation. A 6.8-µF tantalum bulk capacitor is recommended if the amplifier is located far from the power supply and may be shared among other devices. A ceramic 0.1-µF capacitor is recommended within 0.1-in of the device power pin. The ceramic capacitors should be located on the same layer as the amplifier to eliminate the use of vias between the capacitors and the power pin.

Table 2. THS7530EVM Bill of Materials

ITEM NO.	DESCRIPTION	SIZE	REFERENCE DESIGNATOR	QTY	PART NUMBER
1	Bead, ferrite, 3 A, 80 Ω	1206	FB1	1	(Steward) HI1206N800R–00
2	Capacitor, tantalum, 6.8 mF, 35 V, 10%	D	C2	1	(AVX) TAJD685K035R
3	Capacitor, ceramic, 0.1 mF, X7R, 16V	508	C1	1	(AVX) 0508YC104KAT2A
5	Capacitor, ceramic, 0.1 mF, X7R, 50 V	805	C3, C7, C12, C13, C14, C15, C16, C17	8	(AVX) 08055C104KAT2A
6	Diode, Schottky, 20 V, 0.5 A	SOD-123	D1	1	(Diodes Inc.) B0520LW–7
7	Resistor, 10 Ω, 1/8 W, 1%	805	R24, R25, R26	3	(PHYCOMP) 9C08052A10R0FKHFT
8	Resistor, 24.9 Ω, 1/8 W, 1%	805	R9, R15	2	(PHYCOMP) 9C08052A24R9FKHFT
9	Resistor, 1 kΩ, 1.8W, 1%	805	R7, R12	2	(PHYCOMP) 9C08052A1001FKHFT
10	Resistor, 3.92 kΩ , 1/8 W, 1%	805	R1	1	(PHYCOMP) 9C08052A3921FKHFT
11	Resistor, 0 Ω, 1/4 W	1206	C4, C5	2	(PHYCOMP) 9C12063A0R00JLHFT
12	Resistor, 49.9 Ω, 1/4 W, 1%	1206	R4	1	(PHYCOMP) 9C12063A49R9FKRFT
13	Pot., ceramic, 1/4 inch square, 1 kΩ		R2	1	(Bourns) 3362P–1–102
14	Pot., ceramic, 1/4 inch square, 10 kΩ		R21, R22, R23	3	(Bourns) 3362P–1–103
15	IC, TLV2371	SOT-23	U2, U3, U4	3	(TI) TLV2371IDBVT
16	Transformer, 1:1	CD542	T1, T2	2	(Mini-Circuits) ADT1-1WT
17	Connector, edge, SMA PCB Jack		J3, J4	2	(Johnson) 142–0701–801
18	Jack, banana receptacle, 0.25-in diameter hole		J1, J2	2	(HH Smith) 101
19	Header, 0.1-in Ctrs, 0.025-in square pins	2 POS.	JP1	1	(Sullins) PZC36SAAN
20	Shunts		JP1	1	(Sullins) SSC02SYAN
21	Test point, black		TP2, TP3, TP4	3	(Keystone) 5001
22	Test points, red		TP1, TP8, TP9, TP10	4	(Keystone) 5000
23	Standoff, 4–40 Hex, 0.625-in Length			4	(Keystone) 1804
24	Screw, Phillips, 4–40, .250-in			4	SHR–0440–016–SN
25	IC, THS7530		U1	1	(TI) THS7530PWP
26	Board, printed circuit			1	(TI) EDGE # 6441987

Copyright © 2002–2015, Texas Instruments Incorporated

9.2.3 Application Curves

Figure 24 and Figure 25 highlight the input characteristics of the THS7530 device that should be used to design the circuit driving the THS7530 device.

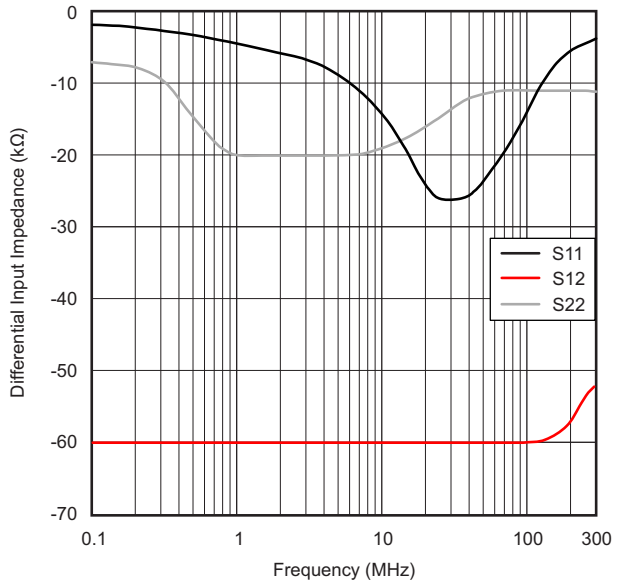

Figure 24. S-Parameters vs Frequency

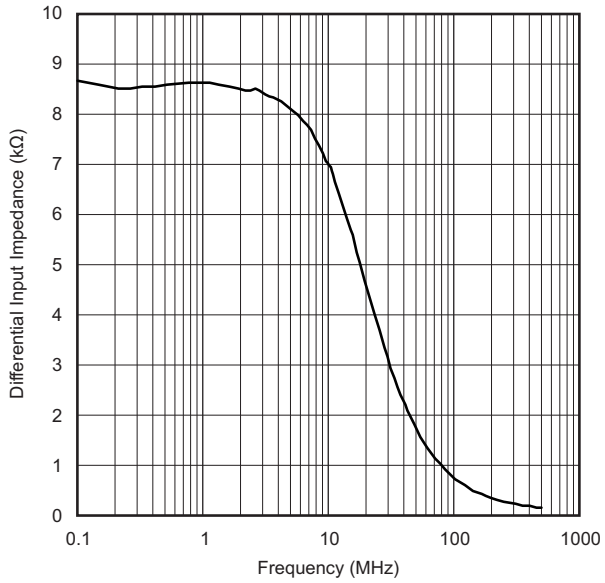

Figure 25. Differential Input Impedance of Main Amplifier vs Frequency

10 Power Supply Recommendations

The THS7530 device is principally intended to operate with a nominal single-supply voltage of 5 V. Supply voltage tolerances of ±10% are supported. The absolute maximum supply is 5.5 V.

Supply decoupling is required, as described in *Application and Implementation*.

Split (or bipolar) supplies can be used with the THS7530 device, as long as the total value across the device remains less than 5.5 V (absolute maximum).

Copyright © 2002–2015, Texas Instruments Incorporated

11 Layout

11.1 Layout Guidelines

The THS7530 device is available in a thermally-enhanced PowerPAD™ package. Figure 26 shows the recommended number of vias and thermal land size recommended for best performance. Thermal vias connect the thermal land to internal or external copper planes and should have a drill diameter sufficiently small so that the via hole is effectively plugged when the barrel of the via is plated with copper. This plug is needed to prevent wicking the solder away from the interface between the package body and the thermal land on the surface of the board during solder reflow. The experiments conducted jointly with Solectron Texas indicate that a via drill diameter of 0.33 mm (13 mils, or .013 in) or smaller works well when 1-ounce copper is plated at the surface of the board and simultaneously plating the barrel of the via. If the thermal vias are not plugged when the copper plating is performed, then a solder mask material should be used to cap the vias with a dimension equal to the via diameter + 0.1 mm minimum. This prevents the solder from being wicked through the thermal via and potentially creating a solder void in the region between the package bottom and the thermal land on the surface of the PCB.

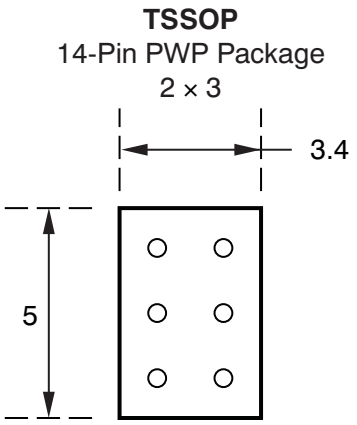

Figure 26. Recommended Thermal Land Size and Thermal Via Patterns (Dimensions in mm)

See TI's Technical Brief titled, *PowerPAD™ Thermally Enhanced Package* (SLMA002) for a detailed discussion of the PowerPAD™ package, its dimensions, and recommended use.

Copyright © 2002–2015, Texas Instruments Incorporated

Layout Guidelines (continued)

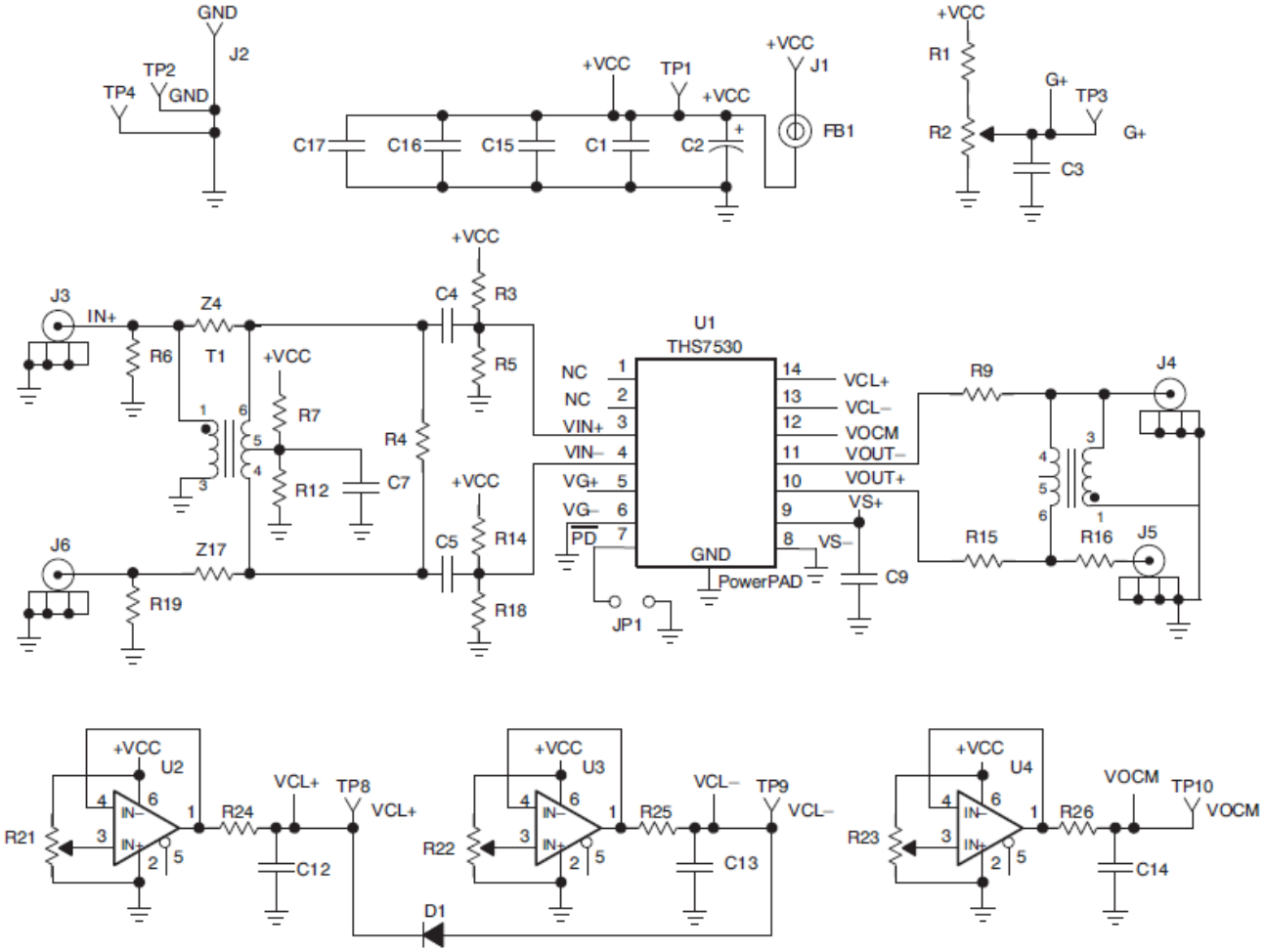

Figure 27. EVM Schematic

11.2 Layout Examples

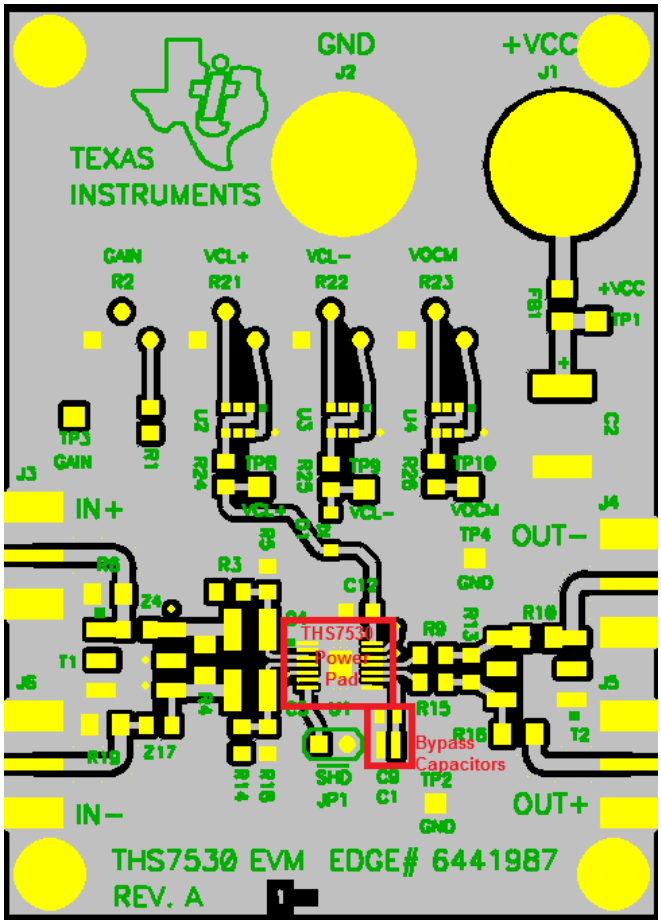

Figure 28. Layout Diagram (Top)

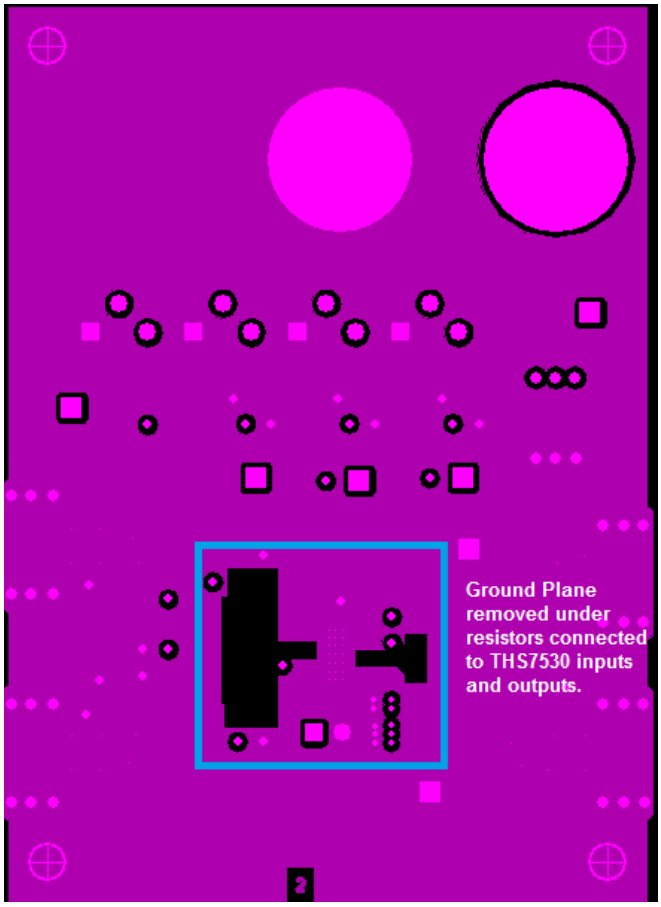

Figure 29. Layout Diagram (Ground)

版权 © 2002–2015, Texas Instruments Incorporated

Layout Examples (continued)

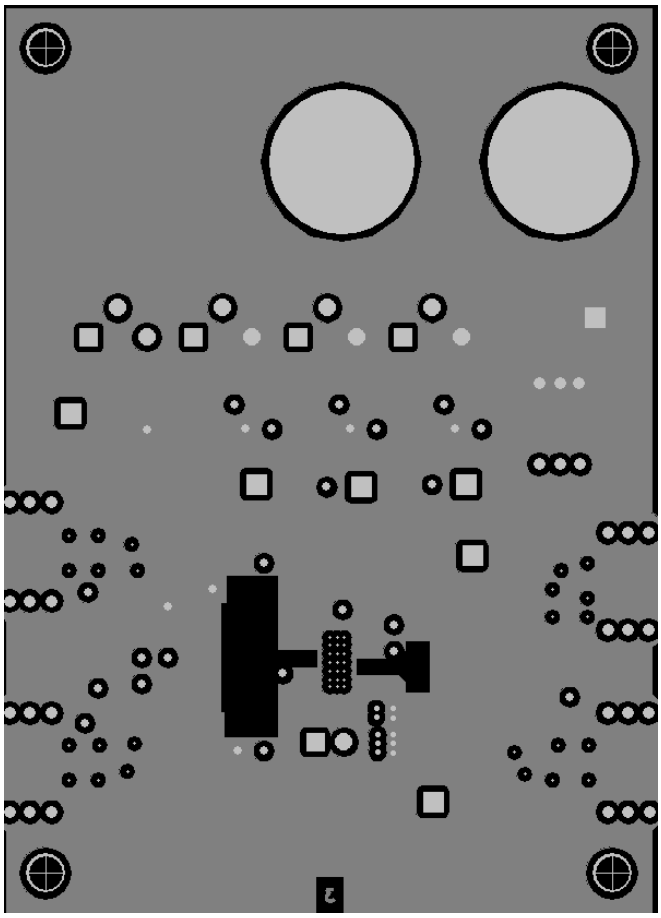

Figure 30. Layout Diagram (Power)

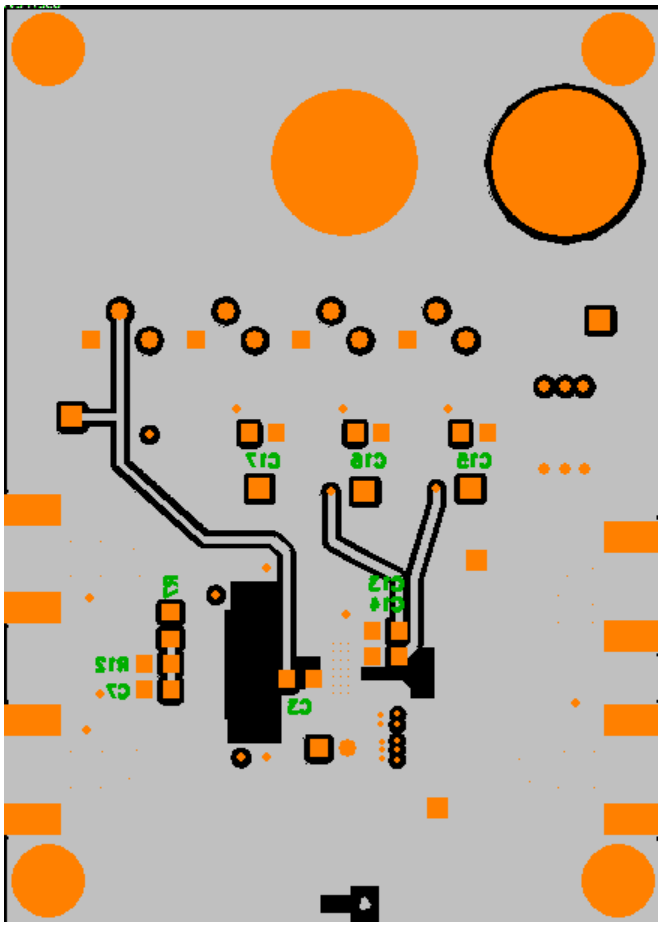

Figure 31. Layout Diagram (Bottom)

12 器件和文档支持

12.1 器件支持

12.1.1 Third-Party Products Disclaimer

TI'S PUBLICATION OF INFORMATION REGARDING THIRD-PARTY PRODUCTS OR SERVICES DOES NOT CONSTITUTE AN ENDORSEMENT REGARDING THE SUITABILITY OF SUCH PRODUCTS OR SERVICES OR A WARRANTY, REPRESENTATION OR ENDORSEMENT OF SUCH PRODUCTS OR SERVICES, EITHER ALONE OR IN COMBINATION WITH ANY TI PRODUCT OR SERVICE.

12.1.2 开发支持

有关 THS7530 PSPICE 模型，请参见 SLOJ139。

有关 THS7530 TINA-TI SPICE 模型，请参见 SLAM020。

有关 THS7530 TINA-TI 参考设计，请参见 SLAC091。

12.2 文档支持

12.2.1 相关文档

相关文档如下：

- *《THS7530 EVM 用户指南》*，SLOU161
- *《高速运算放大器噪声分析》*，SBOA066
- *《TI 模拟信号链指南》*，SLYB174
- *《PowerPAD™ 耐热增强型封装》*，SLMA002
- *《PowerPAD™ 速成》*，SLMA004

12.3 社区资源

The following links connect to TI community resources. Linked contents are provided "AS IS" by the respective contributors. They do not constitute TI specifications and do not necessarily reflect TI's views; see TI's Terms of Use.

TI E2E™ Online Community ***TI's Engineer-to-Engineer (E2E) Community.*** Created to foster collaboration among engineers. At e2e.ti.com, you can ask questions, share knowledge, explore ideas and help solve problems with fellow engineers.

Design Support ***TI's Design Support*** Quickly find helpful E2E forums along with design support tools and contact information for technical support.

12.4 商标

PowerPAD, E2E are trademarks of Texas Instruments.
All other trademarks are the property of their respective owners.

12.5 静电放电警告

这些装置包含有限的内置 ESD 保护。 存储或装卸时，应将导线一起截短或将装置放置于导电泡棉中，以防止 MOS 门极遭受静电损伤。

12.6 Glossary

SLYZ022 — *TI Glossary*.

This glossary lists and explains terms, acronyms, and definitions.

13 机械、封装和可订购信息

以下页中包括机械、封装和可订购信息。这些信息是针对指定器件可提供的最新数据。这些数据会在无通知且不对本文档进行修订的情况下发生改变。欲获得该数据表的浏览器版本，请查阅左侧的导航栏。

版权 © 2002–2015, Texas Instruments Incorporated

PACKAGING INFORMATION

Orderable Device	Status (1)	Package Type	Package Drawing	Pins	Package Qty	Eco Plan (2)	Lead finish/ Ball material (6)	MSL Peak Temp (3)	Op Temp (°C)	Device Marking (4/5)	Samples
THS7530PWP	ACTIVE	HTSSOP	PWP	14	90	RoHS & Green	NIPDAU	Level-2-260C-1 YEAR	-40 to 85	THS7530	Samples
THS7530PWPR	ACTIVE	HTSSOP	PWP	14	2000	RoHS & Green	NIPDAU	Level-2-260C-1 YEAR	-40 to 85	THS7530	Samples

(1) The marketing status values are defined as follows:
ACTIVE: Product device recommended for new designs.
LIFEBUY: TI has announced that the device will be discontinued, and a lifetime-buy period is in effect.
NRND: Not recommended for new designs. Device is in production to support existing customers, but TI does not recommend using this part in a new design.
PREVIEW: Device has been announced but is not in production. Samples may or may not be available.
OBSOLETE: TI has discontinued the production of the device.

(2) **RoHS:** TI defines "RoHS" to mean semiconductor products that are compliant with the current EU RoHS requirements for all 10 RoHS substances, including the requirement that RoHS substance do not exceed 0.1% by weight in homogeneous materials. Where designed to be soldered at high temperatures, "RoHS" products are suitable for use in specified lead-free processes. TI may reference these types of products as "Pb-Free".
RoHS Exempt: TI defines "RoHS Exempt" to mean products that contain lead but are compliant with EU RoHS pursuant to a specific EU RoHS exemption.
Green: TI defines "Green" to mean the content of Chlorine (Cl) and Bromine (Br) based flame retardants meet JS709B low halogen requirements of <=1000ppm threshold. Antimony trioxide based flame retardants must also meet the <=1000ppm threshold requirement.

(3) MSL, Peak Temp. - The Moisture Sensitivity Level rating according to the JEDEC industry standard classifications, and peak solder temperature.

(4) There may be additional marking, which relates to the logo, the lot trace code information, or the environmental category on the device.

(5) Multiple Device Markings will be inside parentheses. Only one Device Marking contained in parentheses and separated by a "~" will appear on a device. If a line is indented then it is a continuation of the previous line and the two combined represent the entire Device Marking for that device.

(6) Lead finish/Ball material - Orderable Devices may have multiple material finish options. Finish options are separated by a vertical ruled line. Lead finish/Ball material values may wrap to two lines if the finish value exceeds the maximum column width.

Important Information and Disclaimer: The information provided on this page represents TI's knowledge and belief as of the date that it is provided. TI bases its knowledge and belief on information provided by third parties, and makes no representation or warranty as to the accuracy of such information. Efforts are underway to better integrate information from third parties. TI has taken and continues to take reasonable steps to provide representative and accurate information but may not have conducted destructive testing or chemical analysis on incoming materials and chemicals. TI and TI suppliers consider certain information to be proprietary, and thus CAS numbers and other limited information may not be available for release.

In no event shall TI's liability arising out of such information exceed the total purchase price of the TI part(s) at issue in this document sold by TI to Customer on an annual basis.

TAPE AND REEL INFORMATION

REEL DIMENSIONS

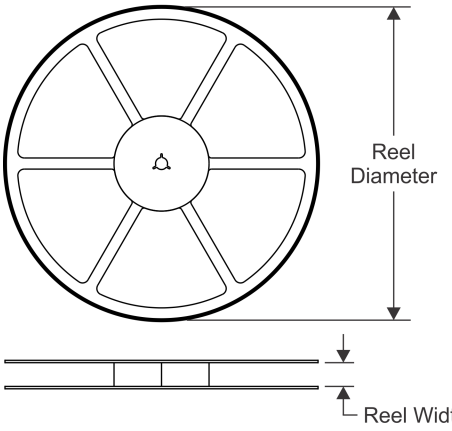

TAPE DIMENSIONS

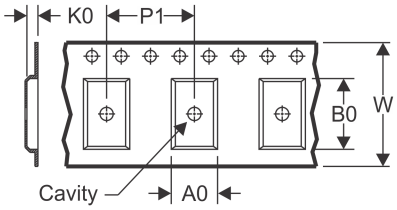

A0	Dimension designed to accommodate the component width
B0	Dimension designed to accommodate the component length
K0	Dimension designed to accommodate the component thickness
W	Overall width of the carrier tape
P1	Pitch between successive cavity centers

QUADRANT ASSIGNMENTS FOR PIN 1 ORIENTATION IN TAPE

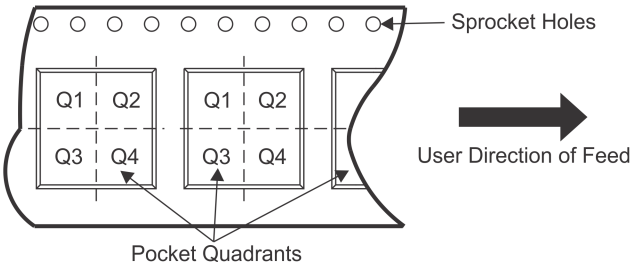

*All dimensions are nominal

Device	Package Type	Package Drawing	Pins	SPQ	Reel Diameter (mm)	Reel Width W1 (mm)	A0 (mm)	B0 (mm)	K0 (mm)	P1 (mm)	W (mm)	Pin1 Quadrant
THS7530PWPR	HTSSOP	PWP	14	2000	330.0	12.4	6.9	5.6	1.6	8.0	12.0	Q1

TAPE AND REEL BOX DIMENSIONS

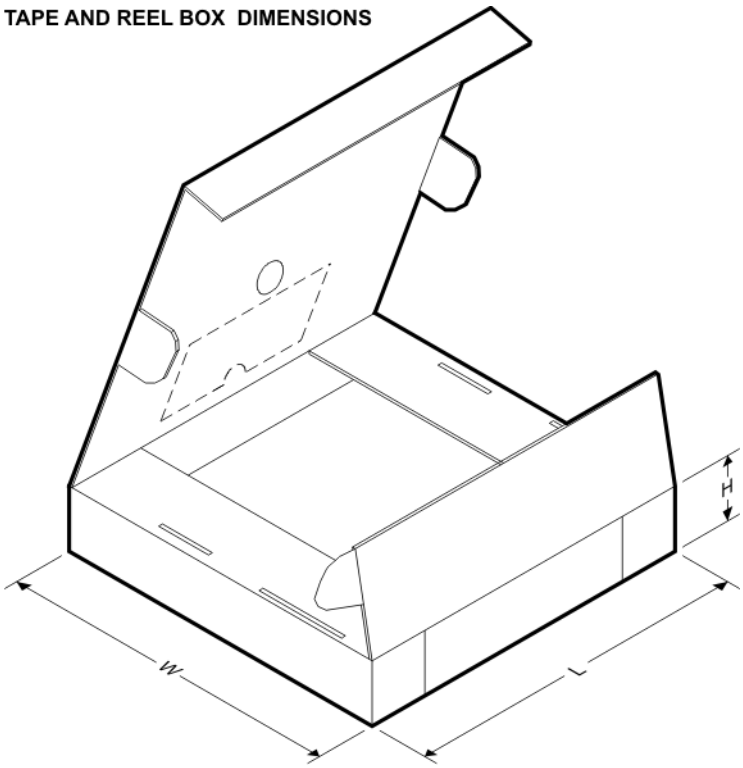

*All dimensions are nominal

Device	Package Type	Package Drawing	Pins	SPQ	Length (mm)	Width (mm)	Height (mm)
THS7530PWPR	HTSSOP	PWP	14	2000	350.0	350.0	43.0

TUBE

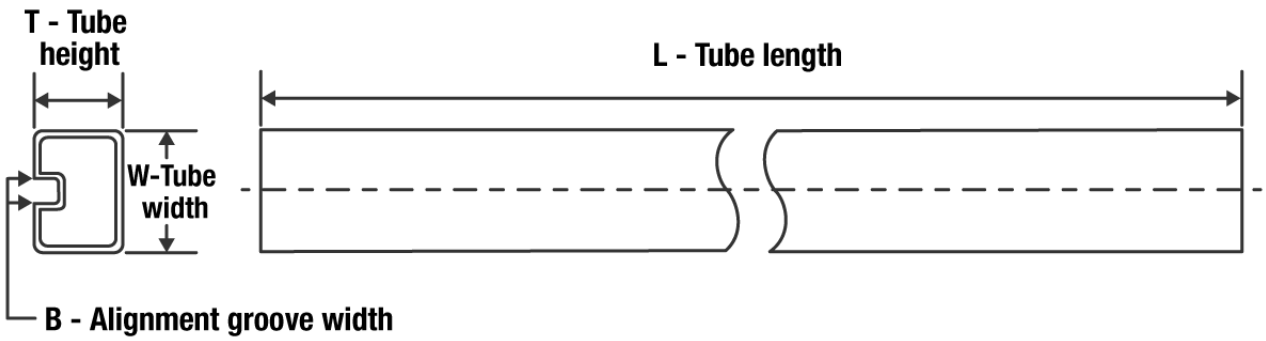

*All dimensions are nominal

Device	Package Name	Package Type	Pins	SPQ	L (mm)	W (mm)	T (µm)	B (mm)
THS7530PWP	PWP	HTSSOP	14	90	530	10.2	3600	3.5

PWP (R-PDSO-G14) PowerPAD™ PLASTIC SMALL OUTLINE

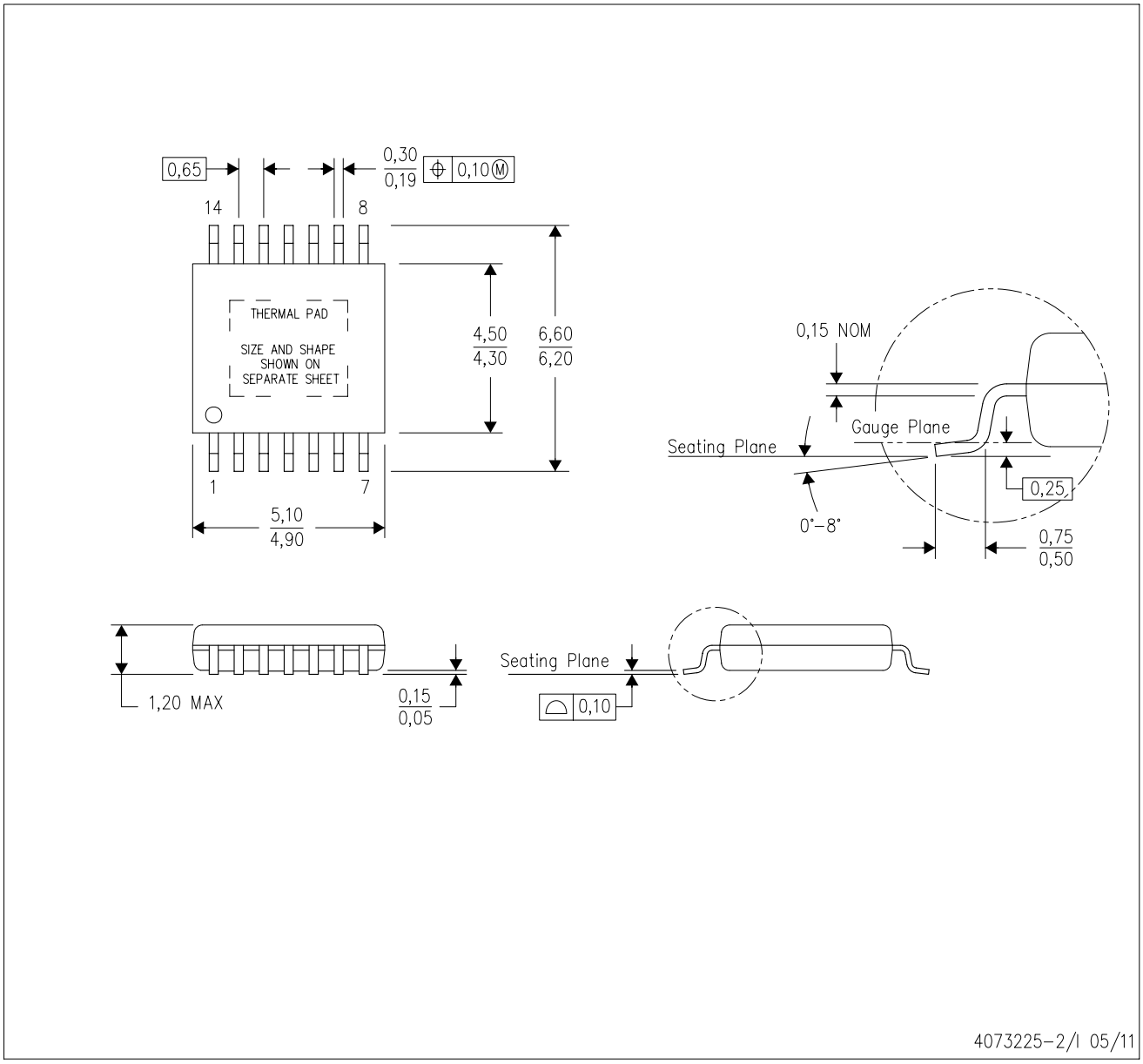

NOTES:
A. All linear dimensions are in millimeters.
B. This drawing is subject to change without notice.
C. Body dimensions do not include mold flash or protrusions. Mold flash and protrusion shall not exceed 0.15 per side.
D. This package is designed to be soldered to a thermal pad on the board. Refer to Technical Brief, PowerPad Thermally Enhanced Package, Texas Instruments Literature No. SLMA002 for information regarding recommended board layout. This document is available at www.ti.com <http://www.ti.com>.
E. See the additional figure in the Product Data Sheet for details regarding the exposed thermal pad features and dimensions.
E. Falls within JEDEC MO-153

PowerPAD is a trademark of Texas Instruments.

PWP (R-PDSO-G14) PowerPAD™ SMALL PLASTIC OUTLINE

THERMAL INFORMATION

This PowerPAD™ package incorporates an exposed thermal pad that is designed to be attached to a printed circuit board (PCB). The thermal pad must be soldered directly to the PCB. After soldering, the PCB can be used as a heatsink. In addition, through the use of thermal vias, the thermal pad can be attached directly to the appropriate copper plane shown in the electrical schematic for the device, or alternatively, can be attached to a special heatsink structure designed into the PCB. This design optimizes the heat transfer from the integrated circuit (IC).

For additional information on the PowerPAD package and how to take advantage of its heat dissipating abilities, refer to Technical Brief, PowerPAD Thermally Enhanced Package, Texas Instruments Literature No. SLMA002 and Application Brief, PowerPAD Made Easy, Texas Instruments Literature No. SLMA004. Both documents are available at www.ti.com.

The exposed thermal pad dimensions for this package are shown in the following illustration.

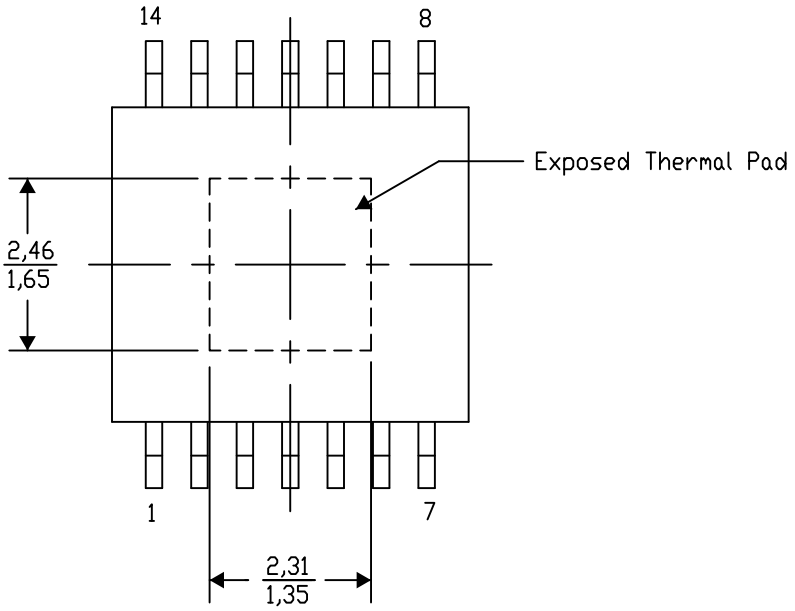

Top View

Exposed Thermal Pad Dimensions

4206332-2/AO 01/16

NOTE: A. All linear dimensions are in millimeters

PowerPAD is a trademark of Texas Instruments

PWP (R–PDSO–G14) PowerPAD™ PLASTIC SMALL OUTLINE

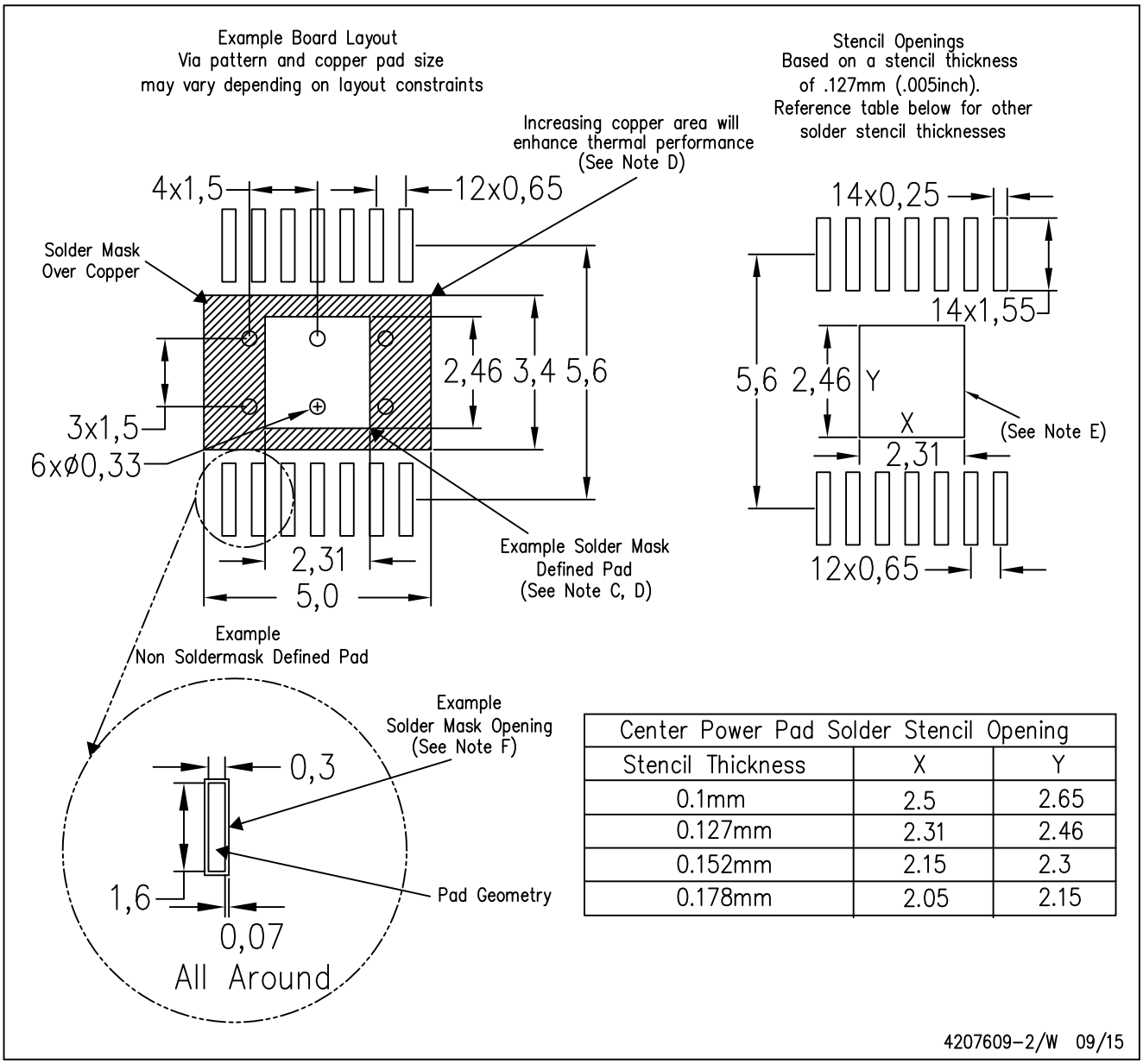

Center Power Pad Solder Stencil Opening		
Stencil Thickness	X	Y
0.1mm	2.5	2.65
0.127mm	2.31	2.46
0.152mm	2.15	2.3
0.178mm	2.05	2.15

NOTES:
- A. All linear dimensions are in millimeters.
- B. This drawing is subject to change without notice.
- C. Customers should place a note on the circuit board fabrication drawing not to alter the center solder mask defined pad.
- D. This package is designed to be soldered to a thermal pad on the board. Refer to Technical Brief, PowerPad Thermally Enhanced Package, Texas Instruments Literature No. SLMA002, SLMA004, and also the Product Data Sheets for specific thermal information, via requirements, and recommended board layout. These documents are available at www.ti.com <http://www.ti.com>. Publication IPC–7351 is recommended for alternate designs.
- E. Laser cutting apertures with trapezoidal walls and also rounding corners will offer better paste release. Customers should contact their board assembly site for stencil design recommendations. Example stencil design based on a 50% volumetric metal load solder paste. Refer to IPC–7525 for other stencil recommendations.
- F. Customers should contact their board fabrication site for solder mask tolerances between and around signal pads.

PWP (R-PDSO-G14) PowerPAD™ SMALL PLASTIC OUTLINE

THERMAL INFORMATION

This PowerPAD™ package incorporates an exposed thermal pad that is designed to be attached to a printed circuit board (PCB). The thermal pad must be soldered directly to the PCB. After soldering, the PCB can be used as a heatsink. In addition, through the use of thermal vias, the thermal pad can be attached directly to the appropriate copper plane shown in the electrical schematic for the device, or alternatively, can be attached to a special heatsink structure designed into the PCB. This design optimizes the heat transfer from the integrated circuit (IC).

For additional information on the PowerPAD package and how to take advantage of its heat dissipating abilities, refer to Technical Brief, PowerPAD Thermally Enhanced Package, Texas Instruments Literature No. SLMA002 and Application Brief, PowerPAD Made Easy, Texas Instruments Literature No. SLMA004. Both documents are available at www.ti.com.

The exposed thermal pad dimensions for this package are shown in the following illustration.

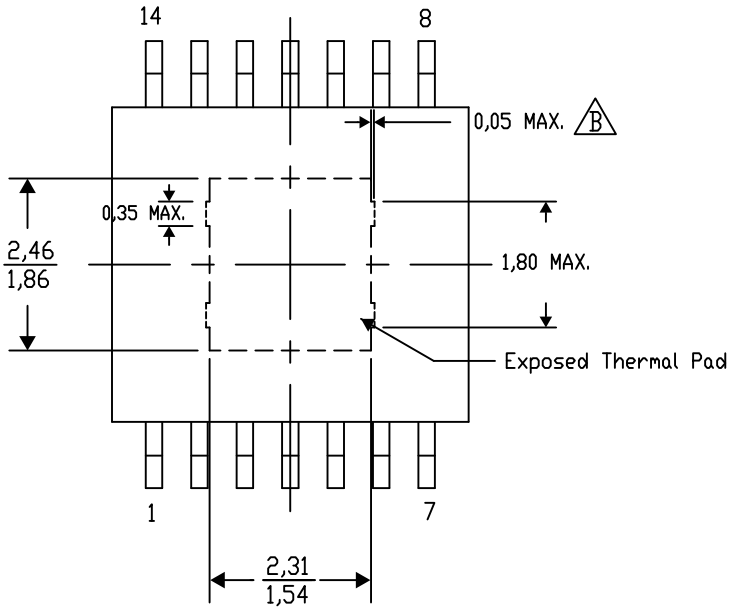

Top View

Exposed Thermal Pad Dimensions

4206332-44/AO 01/16

NOTE: A. All linear dimensions are in millimeters

B. Exposed tie strap features may not be present.

PowerPAD is a trademark of Texas Instruments

PWP (R–PDSO–G14) PowerPAD™ PLASTIC SMALL OUTLINE

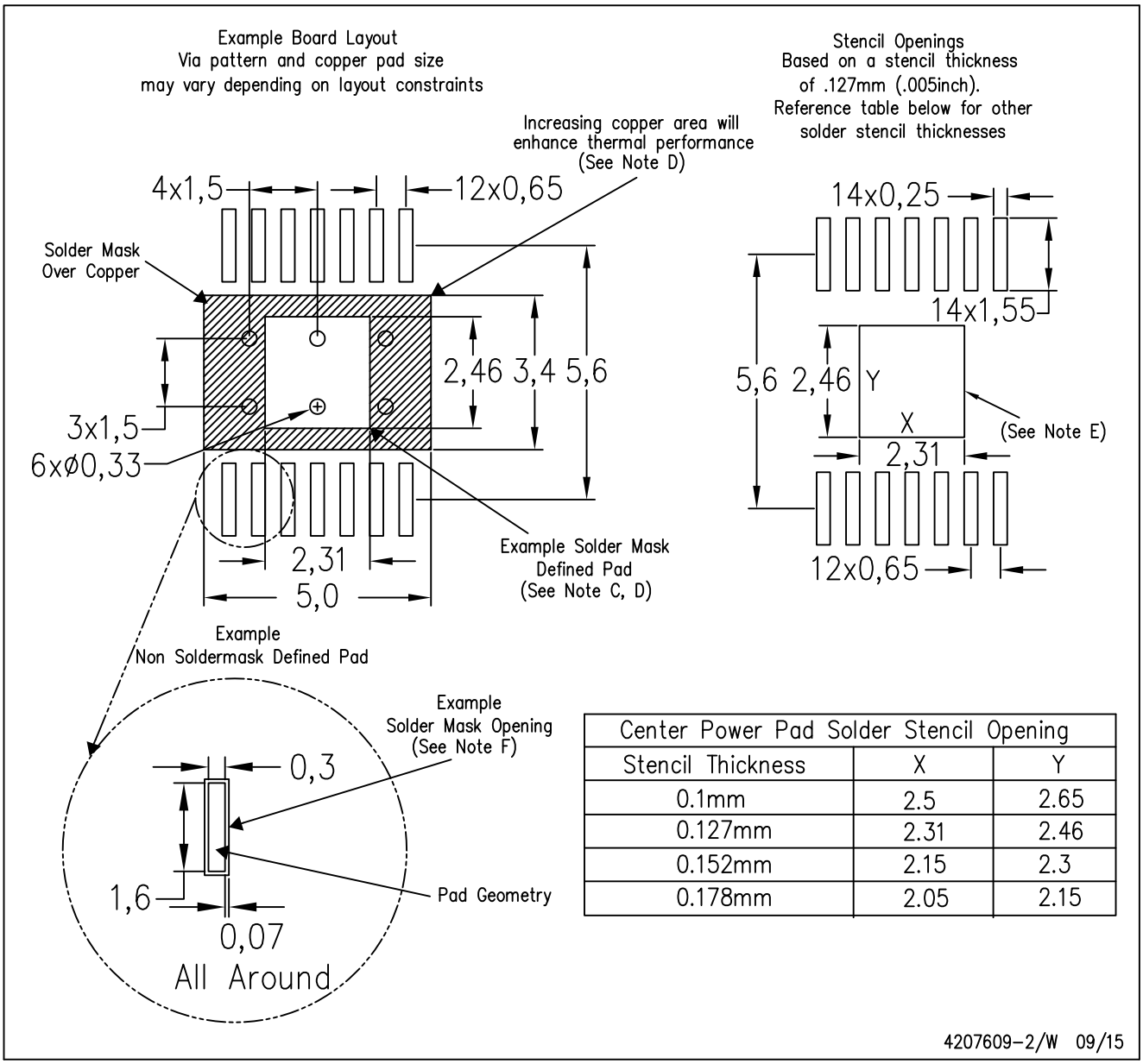

Center Power Pad Solder Stencil Opening		
Stencil Thickness	X	Y
0.1mm	2.5	2.65
0.127mm	2.31	2.46
0.152mm	2.15	2.3
0.178mm	2.05	2.15

NOTES:
- A. All linear dimensions are in millimeters.
- B. This drawing is subject to change without notice.
- C. Customers should place a note on the circuit board fabrication drawing not to alter the center solder mask defined pad.
- D. This package is designed to be soldered to a thermal pad on the board. Refer to Technical Brief, PowerPad Thermally Enhanced Package, Texas Instruments Literature No. SLMA002, SLMA004, and also the Product Data Sheets for specific thermal information, via requirements, and recommended board layout. These documents are available at www.ti.com <http://www.ti.com>. Publication IPC–7351 is recommended for alternate designs.
- E. Laser cutting apertures with trapezoidal walls and also rounding corners will offer better paste release. Customers should contact their board assembly site for stencil design recommendations. Example stencil design based on a 50% volumetric metal load solder paste. Refer to IPC–7525 for other stencil recommendations.
- F. Customers should contact their board fabrication site for solder mask tolerances between and around signal pads.

重要声明和免责声明

TI“按原样”提供技术和可靠性数据（包括数据表）、设计资源（包括参考设计）、应用或其他设计建议、网络工具、安全信息和其他资源，不保证没有瑕疵且不做出任何明示或暗示的担保，包括但不限于对适销性、某特定用途方面的适用性或不侵犯任何第三方知识产权的暗示担保。

这些资源可供使用 TI 产品进行设计的熟练开发人员使用。您将自行承担以下全部责任：(1) 针对您的应用选择合适的 TI 产品，(2) 设计、验证并测试您的应用，(3) 确保您的应用满足相应标准以及任何其他功能安全、信息安全、监管或其他要求。

这些资源如有变更，恕不另行通知。TI 授权您仅可将这些资源用于研发本资源所述的 TI 产品的应用。严禁对这些资源进行其他复制或展示。您无权使用任何其他 TI 知识产权或任何第三方知识产权。您应全额赔偿因在这些资源的使用中对 TI 及其代表造成的任何索赔、损害、成本、损失和债务，TI 对此概不负责。

TI 提供的产品受 TI 的销售条款或 ti.com 上其他适用条款/TI 产品随附的其他适用条款的约束。TI 提供这些资源并不会扩展或以其他方式更改 TI 针对 TI 产品发布的适用的担保或担保免责声明。

TI 反对并拒绝您可能提出的任何其他或不同的条款。

邮寄地址：Texas Instruments, Post Office Box 655303, Dallas, Texas 75265
Copyright © 2022，德州仪器 (TI) 公司