TEXAS INSTRUMENTS

TL7702A, TL7705A, TL7709A, TL7712A, TL7715A

SLVS028K – APRIL 1983 – REVISED SEPTEMBER 2016

TL77xxA Supply-Voltage Supervisors

1 Features

- Power-On Reset Generator
- Automatic Reset Generation After Voltage Drop
- Wide Supply-Voltage Range
- Precision Voltage Sensor
- Temperature-Compensated Voltage Reference
- Externally Adjustable Pulse Duration

2 Applications

- Computers
- Tablets
- Smart Phones
- Servers
- Music Players

3 Description

The TL77xxA family of integrated-circuit supply-voltage supervisors is designed specifically for use as reset controllers in microcomputer and microprocessor systems. The supply-voltage supervisor monitors the supply for undervoltage conditions at the SENSE input. During power up, the $\overline{\text{RESET}}$ output becomes active (low) when V_{CC} attains a value approaching 3.6 V. At this point (assuming that SENSE is above V_{IT+}), the delay timer function activates a time delay, after which outputs $\overline{\text{RESET}}$ and RESET go inactive (high and low, respectively). When an undervoltage condition occurs during normal operation, $\overline{\text{RESET}}$ and RESET go active.

Device Information(1)

PART NUMBER	PACKAGE	BODY SIZE (NOM)
TL77xxA	SOIC (8)	4.90 mm × 3.91 mm
	PDIP (8)	9.81 mm × 6.35 mm
TL7705A	SO (8)	6.20 mm × 5.30 mm

(1) For all available packages, see the orderable addendum at the end of the datasheet.

Three-Supply Monitoring

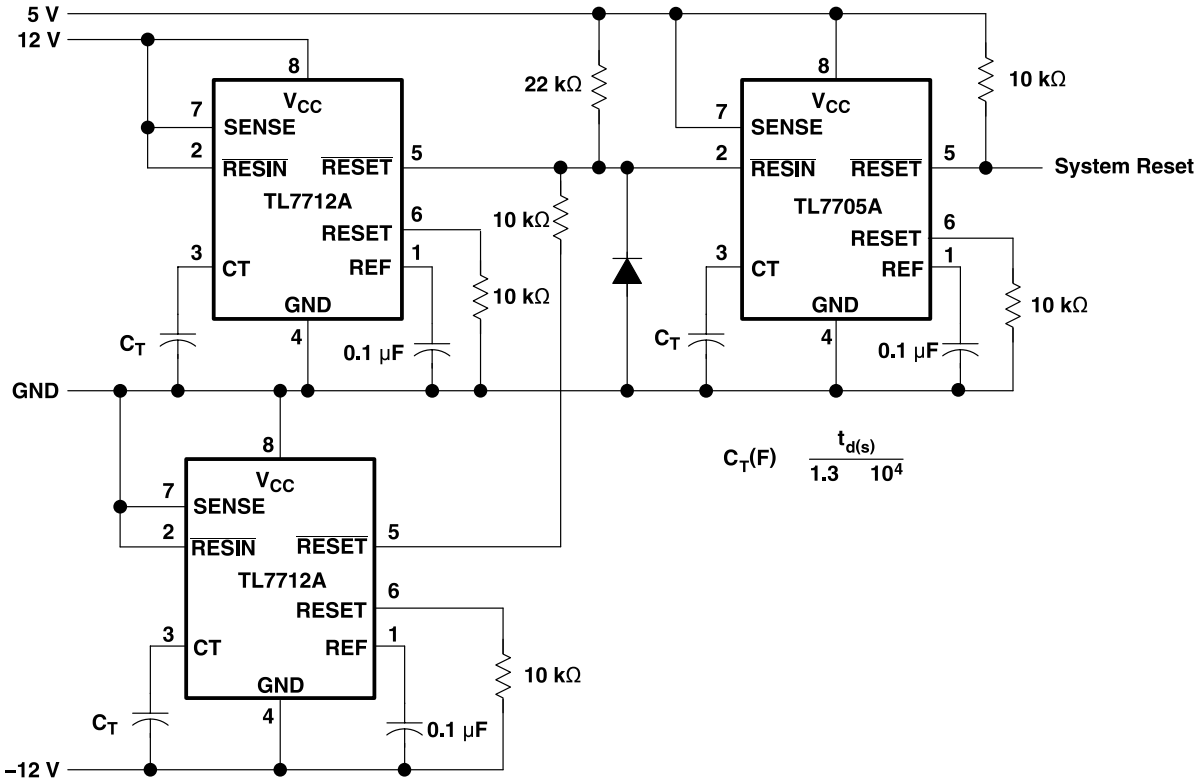

An IMPORTANT NOTICE at the end of this data sheet addresses availability, warranty, changes, use in safety-critical applications, intellectual property matters and other important disclaimers. PRODUCTION DATA.

Table of Contents

1 Features ... 1
2 Applications ... 1
3 Description ... 1
4 Revision History ... 2
5 Pin Configuration and Functions ... 3
6 Specifications ... 4
6.1 Absolute Maximum Ratings ... 4
6.2 ESD Ratings ... 4
6.3 Recommended Operating Conditions ... 4
6.4 Thermal Information ... 5
6.5 Electrical Characteristics ... 5
6.6 Switching Characteristics ... 5
6.7 Typical Characteristics ... 6
7 Parameter Measurement Information ... 7
8 Detailed Description ... 8
8.1 Overview ... 8
8.2 Functional Block Diagram ... 8
8.3 Feature Description ... 9
8.4 Device Functional Modes ... 9
9 Application and Implementation ... 10
9.1 Application Information ... 10
9.2 Typical Application ... 10
9.3 System Examples ... 12
10 Power Supply Recommendations ... 14
11 Layout ... 14
11.1 Layout Guidelines ... 14
11.2 Layout Example ... 14
12 Device and Documentation Support ... 15
12.1 Related Links ... 15
12.2 Receiving Notification of Documentation Updates 15
12.3 Community Resources ... 15
12.4 Trademarks ... 15
12.5 Electrostatic Discharge Caution ... 15
12.6 Glossary ... 15
13 Mechanical, Packaging, and Orderable Information ... 15

4 Revision History

NOTE: Page numbers for previous revisions may differ from page numbers in the current version.

Changes from Revision J (January 2015) to Revision K	Page
• Added SO (8) to *Device Information* table	1
• Changed RESET to $\overline{\text{RESET}}$ in *Timing Diagram*	6
• Added *Receiving Notification of Documentation Updates* section	15

Changes from Revision I (July 2009) to Revision J	Page
• Added *Applications*, *Device Information* table, *Pin Functions* table, *ESD Ratings* table, *Thermal Information* table, *Typical Characteristics*, *Feature Description* section, *Device Functional Modes*, *Application and Implementation* section, *Power Supply Recommendations* section, *Layout* section, *Device and Documentation Support* section, and *Mechanical, Packaging, and Orderable Information* section.	1
• Deleted *Ordering Information* table.	1

Copyright © 1983–2016, Texas Instruments Incorporated

5 Pin Configuration and Functions

TL7702A, TL7709A, TL77012A, TL7715A D or P Package
TL7705A D, P, or PS Package
8-Pin SOIC, PDIP, or SO
Top View

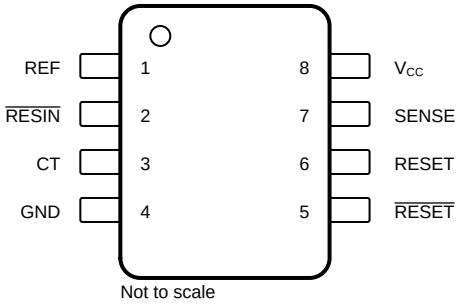

Pin Functions

PIN		TYPE	DESCRIPTION
NAME	NO.		
CT	3	I/O	External timing-capacitor pin
GND	4	—	Device ground
REF	1	O	Voltage reference output
RESET	6	O	Supervisor reset signal output
$\overline{\text{RESET}}$	5	O	Supervisor reset signal output (inverted)
$\overline{\text{RESIN}}$	2	I	Reset input
SENSE	7	I	Sense input
V_{CC}	8	—	Power Supply

6 Specifications

6.1 Absolute Maximum Ratings

over operating free-air temperature range (unless otherwise noted) (1)

			MIN	MAX	UNIT
V_{CC}	Supply voltage (2)			20	V
V_I	Input voltage, $\overline{RESIN}$		–0.3	20	V
V_I	Input voltage range SENSE	TL7702A (3)	–0.3	6	V
		TL7705A	–0.3	20	V
		TL7709A	–0.3	20	V
		TL7712A, TL7715A	–0.3	20	V
I_{OH}	High-level output current, I_{OH}, RESET			–30	mA
I_{OL}	Low-level output current, I_{OL}, $\overline{RESET}$			30	mA
T_J	Operating virtual junction temperature			150	°C
T_{stg}	Storage temperature		–65	150	°C

(1) Stresses beyond those listed under *Absolute Maximum Ratings* may cause permanent damage to the device. These are stress ratings only, which do not imply functional operation of the device at these or any other conditions beyond those indicated under *Recommended Operating Conditions*. Exposure to absolute-maximum-rated conditions for extended periods may affect device reliability.
(2) For proper operation of the TL7702A, the voltage applied to the SENSE terminal should not exceed V_{CC} − 1 V or 6 V, whichever is less
(3) All voltage values are with respect to GND.

6.2 ESD Ratings

			VALUE	UNIT
$V_{(ESD)}$	Electrostatic discharge	Human body model (HBM), per ANSI/ESDA/JEDEC JS-001 (1)	1000	V
		Charged device model (CDM), per JEDEC specification JESD22-C101 (2)	1000	

(1) JEDEC document JEP155 states that 500-V HBM allows safe manufacturing with a standard ESD control process.
(2) JEDEC document JEP157 states that 250-V CDM allows safe manufacturing with a standard ESD control process.

6.3 Recommended Operating Conditions

over operating free-air temperature range (unless otherwise noted)

			MIN	MAX	UNIT
V_{CC}	Supply Voltage		3.5	18	V
V_{IH}	High-level input voltage at $\overline{RESIN}$		2		V
V_{IL}	Low-level input voltage at $\overline{RESIN}$			0.6	V
V_I	Input voltage, SENSE	TL7702A	0	See (1)	V
		TL7705A	0	10	
		TL7709A	0	15	
		TL7712A	0	20	
		TL7715A	0	20	
I_{OH}	High-level output current, RESET			–16	mA
I_{OL}	Low-level output current, $\overline{RESET}$			16	mA
T_A	Operating free-air temperature	TL77xxAC	0	70	°C
		TL77xxAI	–40	85	

(1) For proper operation of the TL7702A, the voltage applied to the SENSE terminal should not exceed V_{CC} − 1 V or 6 V, whichever is less.

Copyright © 1983–2016, Texas Instruments Incorporated

6.4 Thermal Information

THERMAL METRIC[1]		TL77xxA			UNIT
		D	P	PS	
		8 PINS	8 PINS	8 PINS	
$R_{\theta JA}$	Junction-to-ambient thermal resistance	97	85	95	°C/W

(1) For more information about traditional and new thermal metrics, see the *Semiconductor and IC Package Thermal Metrics* application report.

6.5 Electrical Characteristics

over operating free-air temperature range (unless otherwise noted)

PARAMETER				TEST CONDITIONS[1]	TL77xxAC TL77xxAI			UNIT
					MIN	TYP	MAX	
V_{OH}	High-level output voltage, RESET			I_{OH} = –16 mA	V_{CC} – 1.5			V
V_{OL}	Low-level output voltage, $\overline{\text{RESET}}$			I_{OL} = 16 mA			0.4	V
V_{ref}	Reference Voltage			T_A = 25°C	2.48	2.53	2.58	V
V_{IT-}	Negative-going input threshold voltage, SENSE	TL7702A		T_A = 25°C	2.48	2.53	2.58	V
		TL7705A			4.5	4.55	4.6	
		TL7709A			7.5	7.6	7.7	
		TL7712A			10.6	10.8	11	
		TL7715A			13.2	13.5	13.8	
V_{hys}	Hysteresis, SENS (V_{IT+} – V_{IT-})	TL7702A		T_A = 25°C		10		mV
		TL7705A				15		
		TL7709A				20		
		TL7712A				35		
		TL7715A				45		
I_I	Input current	$\overline{\text{RESIN}}$		V_I = 2.4 V to V_{CC}			20	µA
				V_I = 0.4 V			–100	
		SENSE	TL7702A	$V_{ref} < V_I < V_{CC}$ – 1.5 V		0.5	2	
I_{OH}	High-level output current, $\overline{\text{RESET}}$			V_O = 18 V			50	µA
I_{OL}	Low-level output current, RESET			V_O = 0			–50	µA
I_{CC}	Supply current			All inputs and outputs open		1.8	3	mA

(1) All electrical characteristics are measured with 0.1-µF capacitors connected at REF, CT, and V_{CC} to GND.

6.6 Switching Characteristics

over operating free-air temperature range (unless otherwise noted)

PARAMETER			TEST CONDITIONS[1]	TL77xxAC TL77xxAI			UNIT
				MIN	TYP	MAX	
	Output pulse duration		CT = 0.1 µF	0.65	1.2	2.6	msec
	Input pulse duration at $\overline{\text{RESIN}}$			0.4			µs
$t_{w(S)}$	Pulse duration at sense input to switch outputs		$V_{IH} = V_{IT-}$ + 200 mV, $V_{IL} = V_{IT-}$ − 200 mV	2			µs
t_{pd}	propagation delay time, $\overline{\text{RESIN}}$ to $\overline{\text{RESET}}$		V_{CC} = 5V			1	µs
t_r	Rise time	RESET	V_{CC} = 5 V[2]			0.2	µs
		$\overline{\text{RESET}}$				3.5	
t_f	Fall time	RESET	V_{CC} = 5 V[2]			3.5	µs
		$\overline{\text{RESET}}$				0.2	

(1) All switching characteristics are measured with 0.1-µF capacitors connected at REF and V_{CC} to GND.
(2) The rise and fall times are measured with a 4.7-kΩ load resistor at RESET and $\overline{\text{RESET}}$.

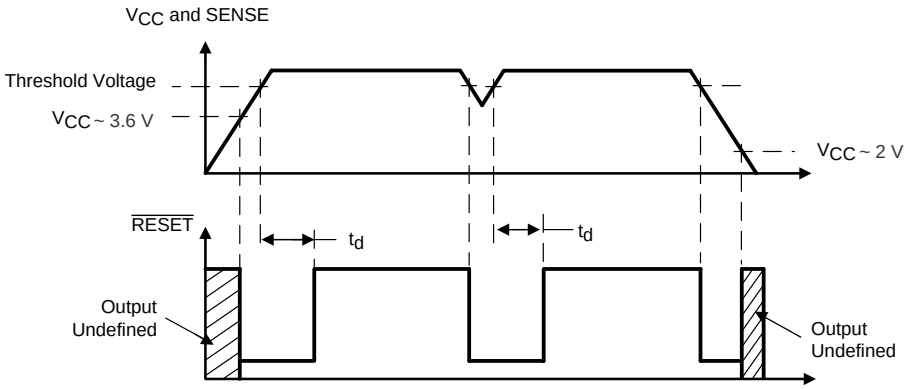

Figure 1. Timing Diagram

6.7 Typical Characteristics

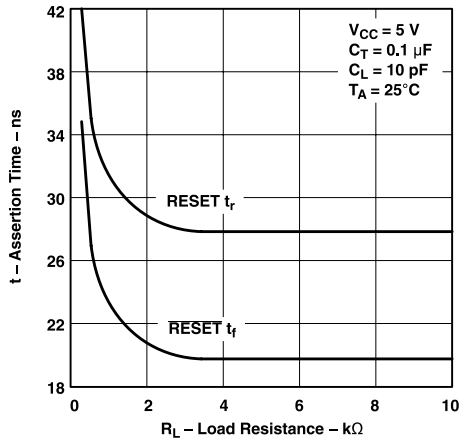

Figure 2. Assertion Time vs Load Resistance

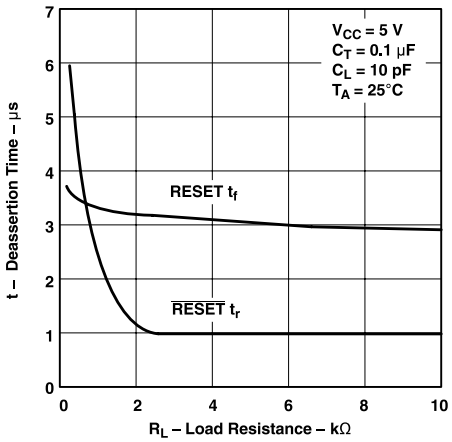

Figure 3. Deassertion Time vs Load Resistance

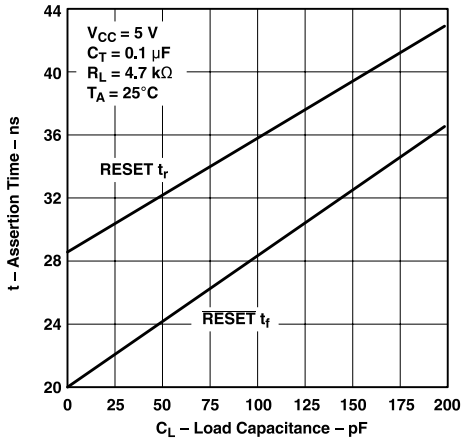

Figure 4. Assertion Time vs Load Capacitance

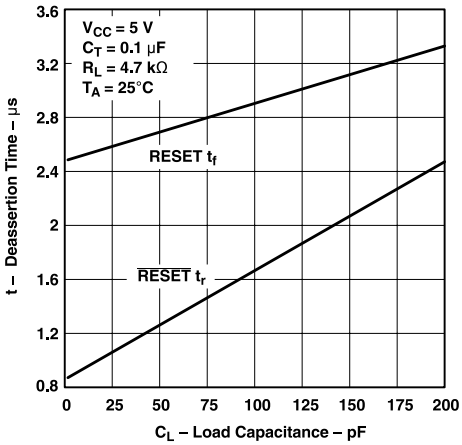

Figure 5. De-assertion Time vs Load Capacitance

Copyright © 1983–2016, Texas Instruments Incorporated

7 Parameter Measurement Information

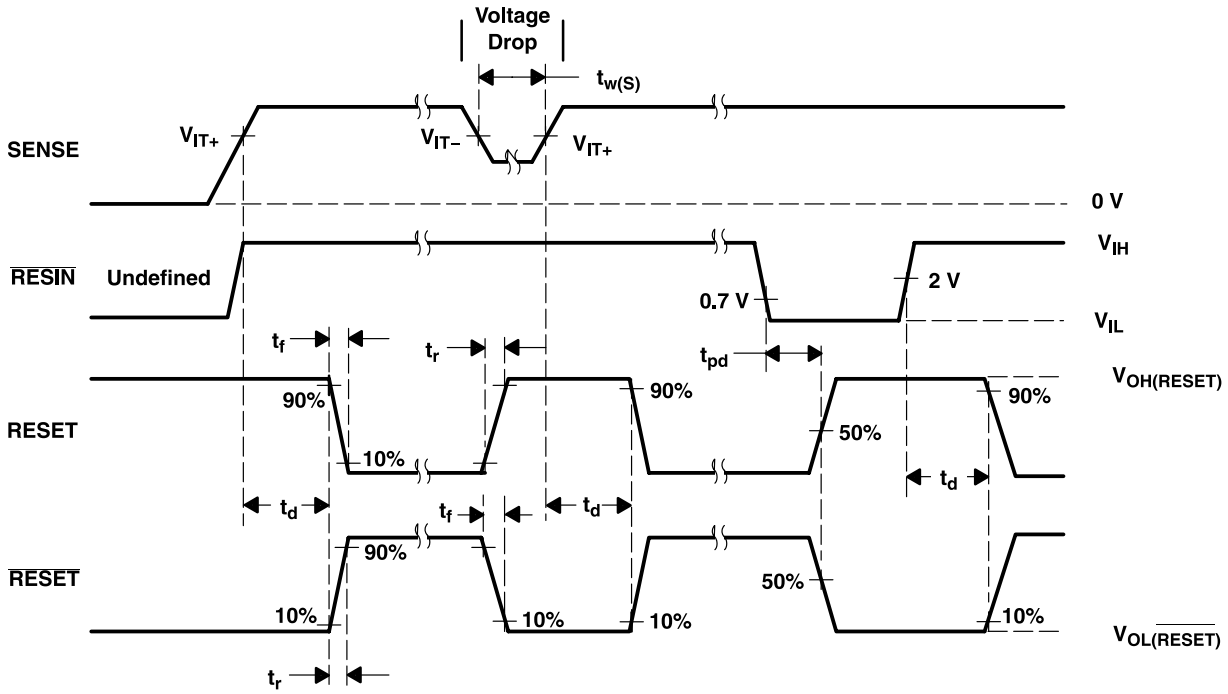

Figure 6. Voltage Waveform

8 Detailed Description

8.1 Overview

The TL77xxA family of integrated-circuit supply-voltage supervisors is designed specifically for use as reset controllers in microcomputer and microprocessor systems. The supply-voltage supervisor monitors the supply for undervoltage conditions at the SENSE input. During power up, the $\overline{\text{RESET}}$ output becomes active (low) when V_{CC} attains a value approaching 3.6 V. At this point (assuming that SENSE is above V_{IT+}), the delay timer function activates a time delay, after which outputs $\overline{\text{RESET}}$ and RESET go inactive (high and low, respectively). When an undervoltage condition occurs during normal operation, $\overline{\text{RESET}}$ and RESET go active. To ensure that a complete reset occurs, the reset outputs remain active for a time delay after the voltage at the SENSE input exceeds the positive-going threshold value.

During power down and when SENSE is below V_{IT-}, the outputs remain active until V_{CC} falls below 2 V. After this, the outputs are undefined. An external capacitor (typically 0.1 μF) must be connected to REF to reduce the influence of fast transients in the supply voltage.

Five versions of this circuit are available:

- TL7705A (Vt = 4.55 V): Application in TTL-systems and microcomputer systems which require a 5 volt supply (for example, TMS7000)
- TL7709A (Vt = 7.6 V): Application in microcomputer systems using the TMS1XXXNLL
- TL7712A (Vt = 10.8 V): Application in CMOS, microprocessor, and memory circuits with a 12 volt supply.
- TL7715A (Vt = 13.5 V): Application in circuits which operate with a supply voltage of 15 V, as is found often in analog circuits.
- TL7702A (Vt = 2.5 V): Application in systems where other supply voltages are used. The required trigger level my be adjusted with an external resistor divider at the SENSE input.

8.2 Functional Block Diagram

The functional block diagram is shown for illustrative purposes only; the actual circuit includes a trimming network to adjust the reference voltage and sense-comparator trip point.

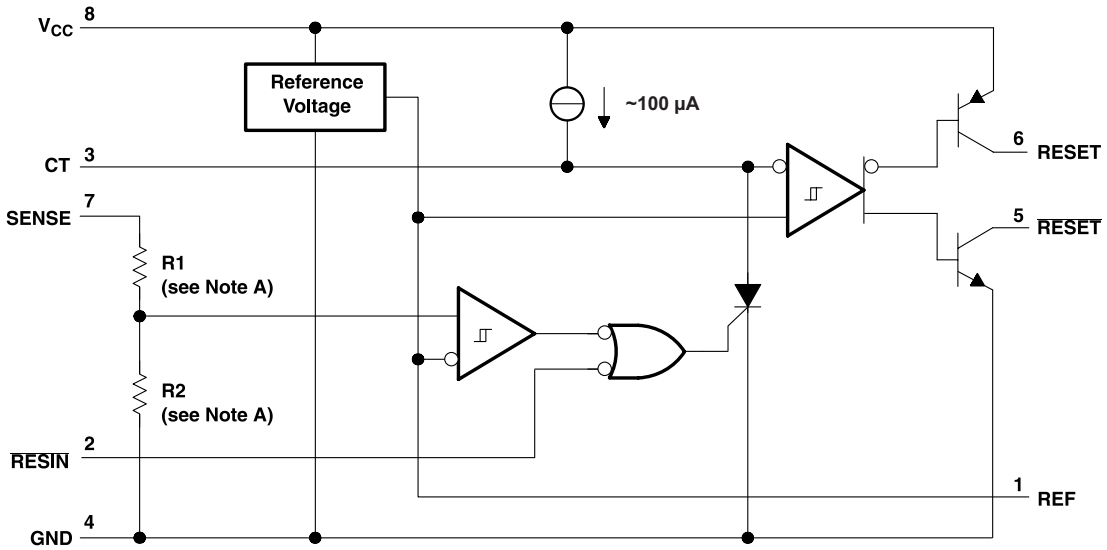

A. TL7702A: R1 = 0 Ω, R2 = open
TL7705A: R1 = 7.8 kΩ, R2 = 10 kΩ
TL7709A: R1 = 19.7 kΩ, R2 = 10 kΩ
TL7712A: R1 = 32.7 kΩ, R2 = 10 kΩ
TL7715A: R1 = 43.4 kΩ, R2 = 10 kΩ

B. Resistor values shown are nominal.

Copyright © 1983–2016, Texas Instruments Incorporated

8.3 Feature Description

8.3.1 Wide Supply-Voltage Range

Th TL77xxA family operates of a wide supply voltage range of 3.5 V to 18 V.

8.3.2 Externally Adjustable Pulse Duration

The time delay is determined by the value of the external capacitor C_T: $t_d = 1.3 \times 10^4 \times C_T$, where C_T is in farads (F) and t_d is in seconds (s).

8.3.3 Temperature-Compensated Voltage Reference

The series TL77xxA incorporates an extremely stable reference voltage source. This voltage source can also be used in applications where a constant voltage source is required. The reference voltage varies less than 10 mV over the supply voltage range of 3.5 V to 18 V. The same stability of the reference voltage is maintained, when the ambient temperature is changed. The reference's voltage varies only 16 mV when the ambient temperature is changed from –40°C to +85°C.

8.4 Device Functional Modes

Figure 7 shows the timing of the various signals. In this example the SENSE input is connected to the supply voltage V_{CC} as in typical applications of this device. The minimum supply voltage for which the function of this device is guaranteed is 3.6 V. After power-on, the outputs are undefined until the minimum supply voltage V_{res} is reached. For the TL77xxA the minimum supply voltage is V_{res} = 3 V (typical 2.5 V). Beyond the voltage V_{res} the capacitor C_T is first kept discharged, and the outputs stay in the active state (RESET = High, $\overline{\text{RESET}}$ = Low). When the input voltage becomes higher than the threshold voltage V_t, the thyristor is turned off and the capacitor is charged. After a delay, t_d, the voltage at the capacitor passes the trigger level of the output comparator and the outputs become inactive. The circuit to be initialized is now set to a defined state and starts the correct operation.

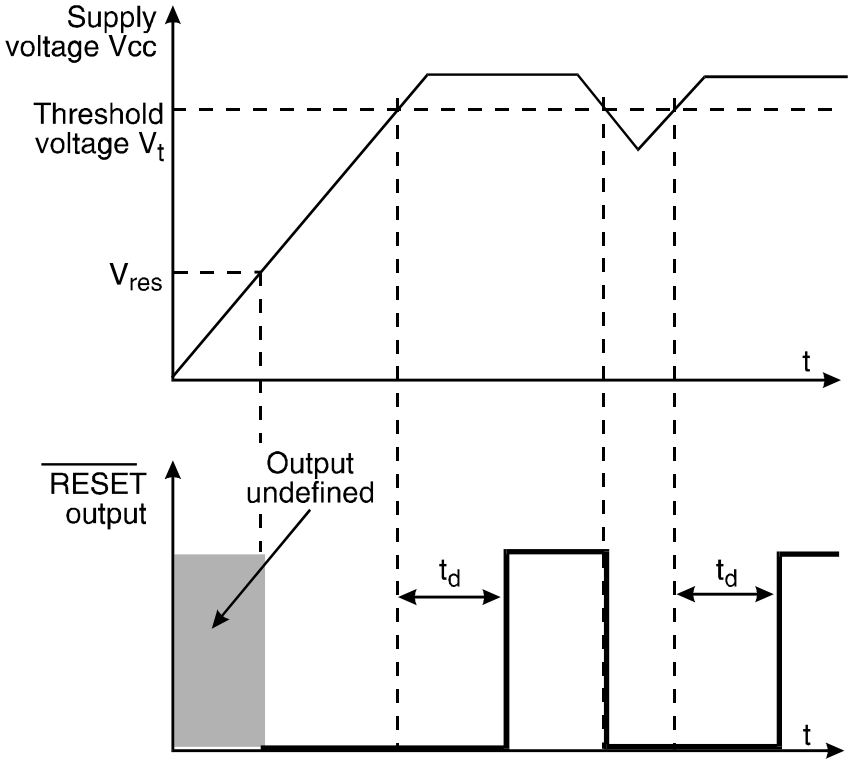

A. Note: SENSE Input connected to V_{CC}

Figure 7. Timing Diagram

9 Application and Implementation

NOTE

Information in the following applications sections is not part of the TI component specification, and TI does not warrant its accuracy or completeness. TI's customers are responsible for determining suitability of components for their purposes. Customers should validate and test their design implementation to confirm system functionality.

9.1 Application Information

This application shows the initialization circuit diagrams for a microprocessor system with supply voltage Vcc = 5 V. The external components required are the decoupling capacitor C_{ref} for the reference voltage and the timing capacitor C_T. The outputs of the TL77xxA are open collector outputs. In Figure 8 therefore a pull-up resistor is shown at the $\overline{\text{RESET}}$ output to ensure the correct HIGH level.

9.2 Typical Application

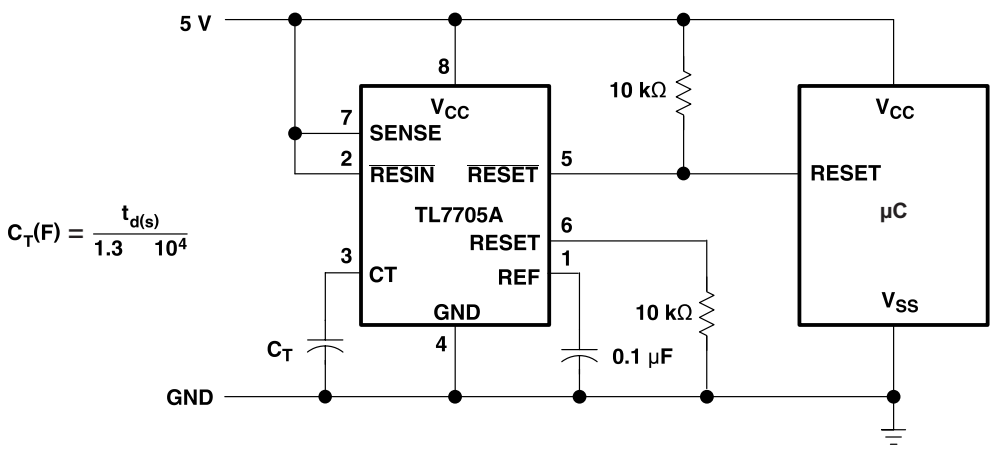

Figure 8. Reset Controller Schematic for a Microprocessor

9.2.1 Design Requirements

- 5-V microprocessor supply voltage
- t_d = 1.3 ms

9.2.2 Detailed Design Procedure

- Select reasonable values for pull-up/pull-down resistors for RESET and $\overline{\text{RESET}}$. This design uses 10 kΩ.
- Choose C_T = 0.1 µF to achieve t_d = 1.3 ms
- This design uses only the active-low reset output ($\overline{\text{RESET}}$) because the example microcontroller resets when the input is Low.

Copyright © 1983–2016, Texas Instruments Incorporated

Typical Application (continued)

9.2.3 Application Curves

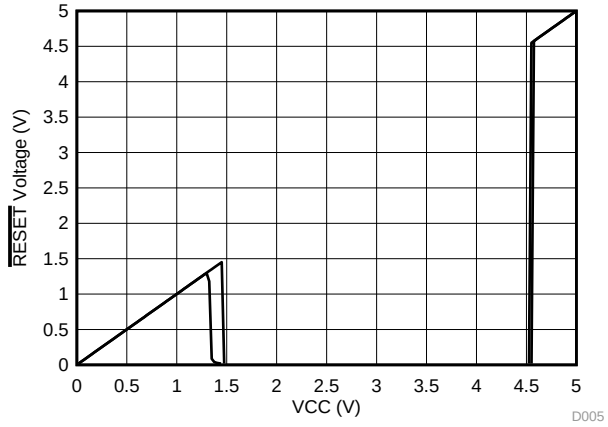

Figure 9. Supervisor $\overline{\text{RESET}}$ Output Voltage vs V_{CC}

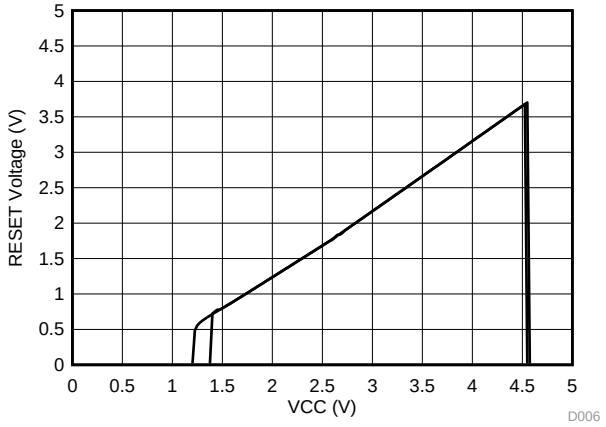

Figure 10. Supervisor RESET Output Voltage vs V_{CC}

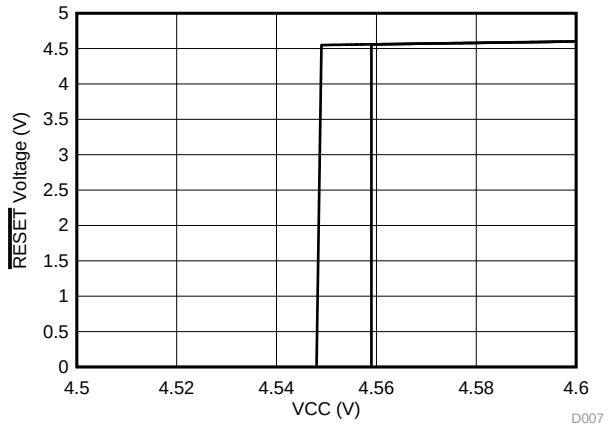

Figure 11. Supervisor $\overline{\text{RESET}}$ Output Voltage vs V_{CC} at Transition

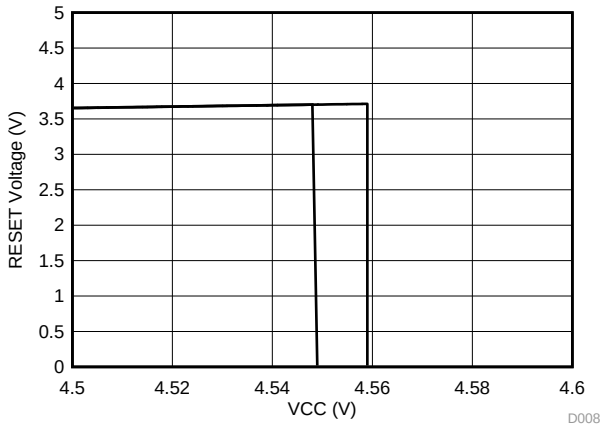

Figure 12. Supervisor RESET Output Voltage vs V_{CC} at Transition

9.3 System Examples

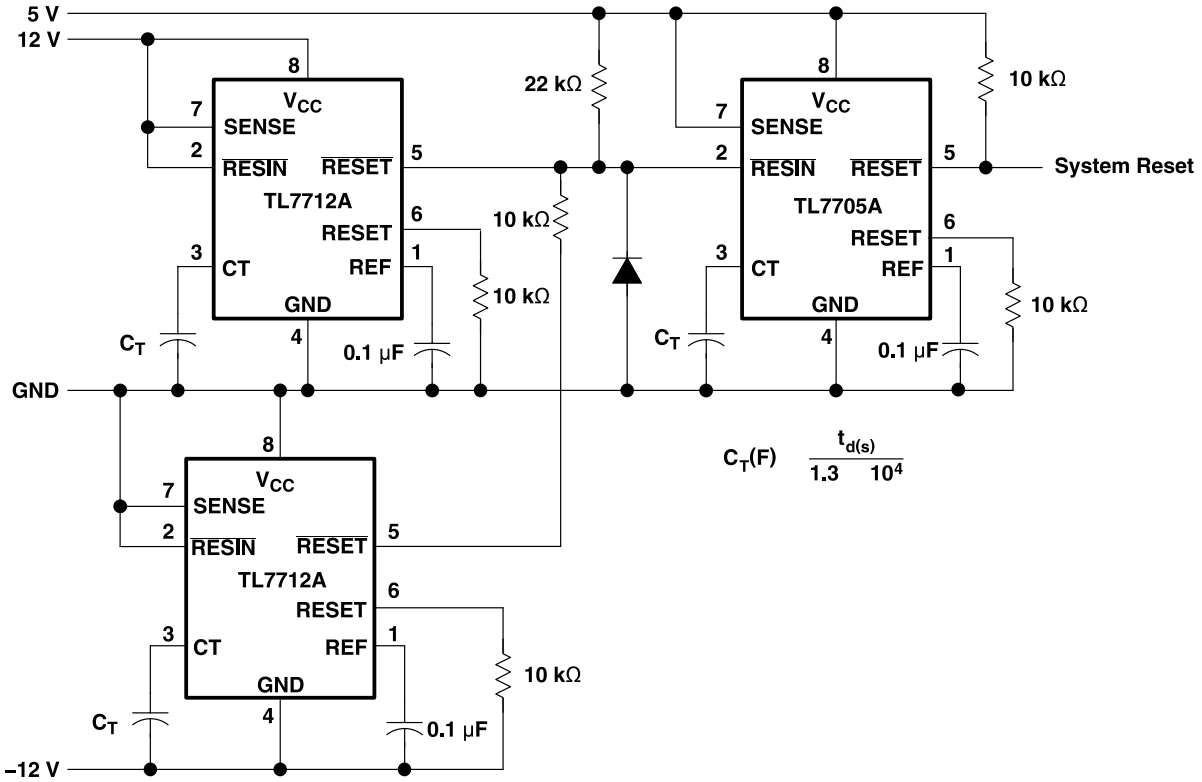

Figure 13. Multi Power-Supply System Reset Generation Schematic

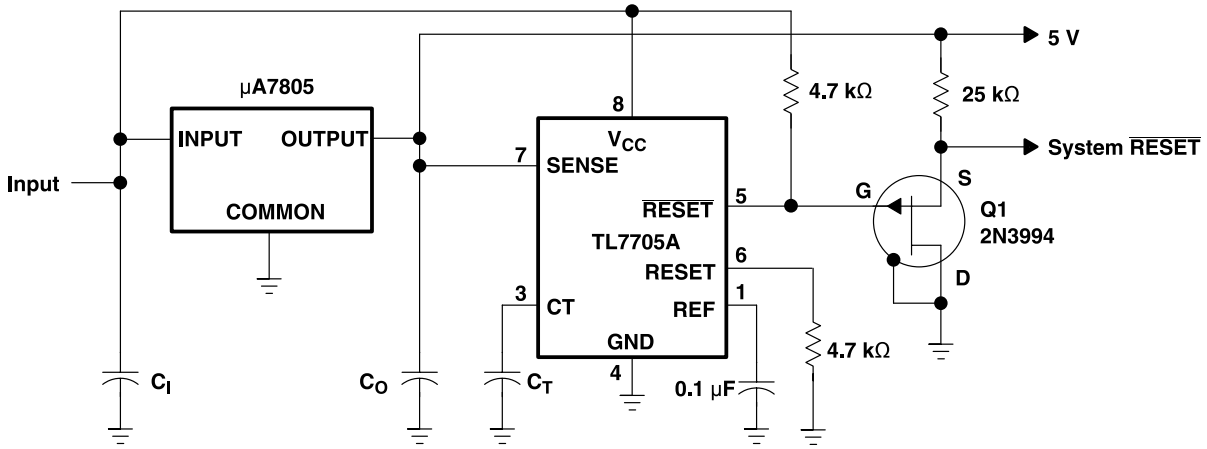

Figure 14. Eliminating Undefined States Using a P-Channel JFET Schematic

Copyright © 1983–2016, Texas Instruments Incorporated

System Examples (continued)

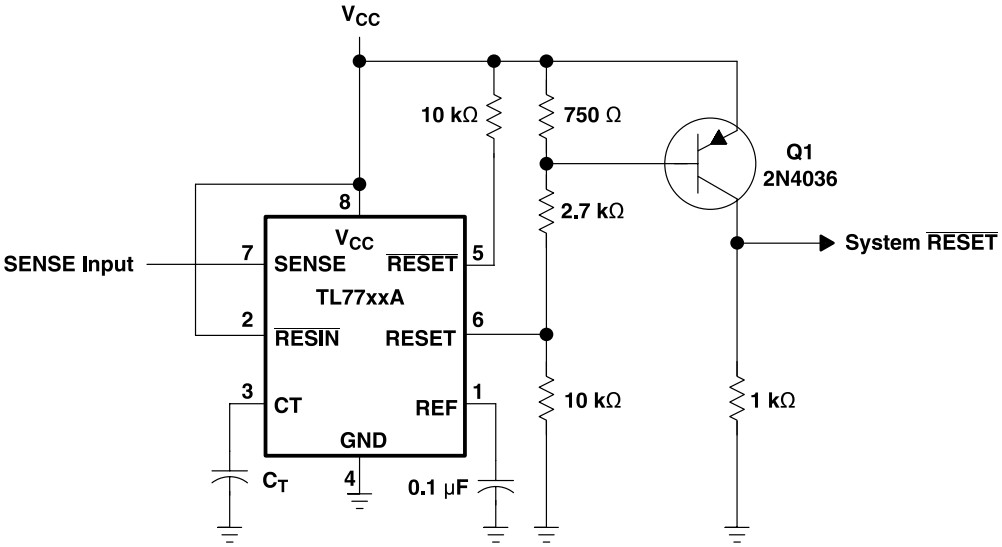

Figure 15. Eliminating Undefined States Using PNP Transistor Schematic

10 Power Supply Recommendations

The TL77xxA devices operate within the specifications from the *Recommended Operating Conditions* between 3.5 V and 18 V.

CAUTION

These devices risk being damaged when powered by more than 20 V.

11 Layout

11.1 Layout Guidelines

The voltage monitor should be placed on the printed circuit board, where there are no neighboring circuits in the which switch high currents (like bus interface circuits and power switches). When laying out the layout of the printed circuit board, take special care with the interconnects which carry analog signals. Beside the SENSE input these are the C_T and V_{ref} terminals. Noise coupled into the C_T input will lead to a reduction of the output pulse width. Noise coupled into the V_{ref} input or into the filter capacitor at this input may lead to undesired triggering of the circuit and by this to an undesired RESET pulse. Practice shows, that this malfunction when high currents flow over the interconnects of these capacitors to the GND terminal of the voltage monitor. To avoid these effects, the GND terminals of these capacitors must be connected by the shortest way to the GND terminal of the voltage monitor in so that no currents caused by other circuits flow over these wires. Figure 16 show a layout proposal for the printed circuit board. Furthermore the resistors of the voltage divider at the SENSE input of the TL7702 (R2 and R3 in Figure 16) have to be placed in so, that no noise may be coupled into this circuit.

11.2 Layout Example

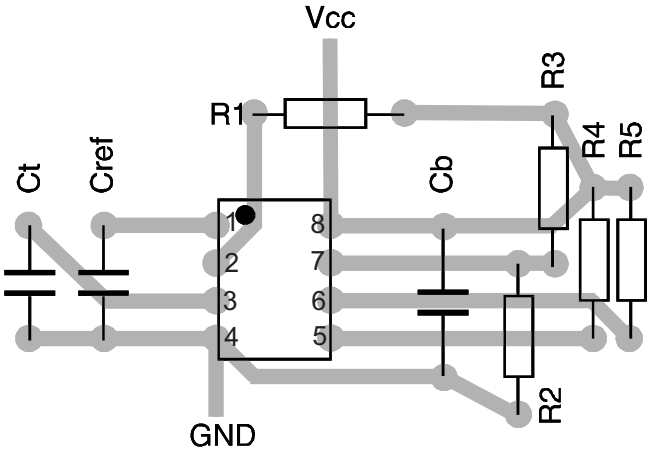

Figure 16. Printed Circuit Layout for the Supply Voltage Supervisor

Copyright © 1983–2016, Texas Instruments Incorporated

12 Device and Documentation Support

12.1 Related Links

The table below lists quick access links. Categories include technical documents, support and community resources, tools and software, and quick access to sample or buy.

Table 1. Related Links

PARTS	PRODUCT FOLDER	SAMPLE & BUY	TECHNICAL DOCUMENTS	TOOLS & SOFTWARE	SUPPORT & COMMUNITY
TL7702A	Click here	Click here	Click here	Click here	Click here
TL7705A	Click here	Click here	Click here	Click here	Click here
TL7709A	Click here	Click here	Click here	Click here	Click here
TL7712A	Click here	Click here	Click here	Click here	Click here
TL7715A	Click here	Click here	Click here	Click here	Click here

12.2 Receiving Notification of Documentation Updates

To receive notification of documentation updates, navigate to the device product folder on ti.com. In the upper right corner, click on *Alert me* to register and receive a weekly digest of any product information that has changed. For change details, review the revision history included in any revised document.

12.3 Community Resources

The following links connect to TI community resources. Linked contents are provided "AS IS" by the respective contributors. They do not constitute TI specifications and do not necessarily reflect TI's views; see TI's Terms of Use.

TI E2E™ Online Community ***TI's Engineer-to-Engineer (E2E) Community.*** Created to foster collaboration among engineers. At e2e.ti.com, you can ask questions, share knowledge, explore ideas and help solve problems with fellow engineers.

Design Support ***TI's Design Support*** Quickly find helpful E2E forums along with design support tools and contact information for technical support.

12.4 Trademarks

E2E is a trademark of Texas Instruments.
All other trademarks are the property of their respective owners.

12.5 Electrostatic Discharge Caution

This integrated circuit can be damaged by ESD. Texas Instruments recommends that all integrated circuits be handled with appropriate precautions. Failure to observe proper handling and installation procedures can cause damage.

ESD damage can range from subtle performance degradation to complete device failure. Precision integrated circuits may be more susceptible to damage because very small parametric changes could cause the device not to meet its published specifications.

12.6 Glossary

SLYZ022 — *TI Glossary*.

This glossary lists and explains terms, acronyms, and definitions.

13 Mechanical, Packaging, and Orderable Information

The following pages include mechanical, packaging, and orderable information. This information is the most current data available for the designated devices. This data is subject to change without notice and revision of this document. For browser-based versions of this data sheet, refer to the left-hand navigation.

PACKAGING INFORMATION

Orderable Device	Status (1)	Package Type	Package Drawing	Pins	Package Qty	Eco Plan (2)	Lead finish/ Ball material (6)	MSL Peak Temp (3)	Op Temp (°C)	Device Marking (4/5)	Samples
TL7702ACD	ACTIVE	SOIC	D	8	75	RoHS & Green	NIPDAU	Level-1-260C-UNLIM	0 to 70	7702AC	Samples
TL7702ACDR	ACTIVE	SOIC	D	8	2500	RoHS & Green	NIPDAU	Level-1-260C-UNLIM	0 to 70	7702AC	Samples
TL7702ACDRG4	ACTIVE	SOIC	D	8	2500	RoHS & Green	NIPDAU	Level-1-260C-UNLIM	0 to 70	7702AC	Samples
TL7702ACP	ACTIVE	PDIP	P	8	50	RoHS & Green	NIPDAU	N / A for Pkg Type	0 to 70	TL7702ACP	Samples
TL7702AID	ACTIVE	SOIC	D	8	75	RoHS & Green	NIPDAU	Level-1-260C-UNLIM	-40 to 85	7702AI	Samples
TL7702AIDR	ACTIVE	SOIC	D	8	2500	RoHS & Green	NIPDAU	Level-1-260C-UNLIM	-40 to 85	7702AI	Samples
TL7702AIDRG4	ACTIVE	SOIC	D	8	2500	RoHS & Green	NIPDAU	Level-1-260C-UNLIM	-40 to 85	7702AI	Samples
TL7702AIP	ACTIVE	PDIP	P	8	50	RoHS & Green	NIPDAU	N / A for Pkg Type	-40 to 85	TL7702AIP	Samples
TL7702AIPE4	ACTIVE	PDIP	P	8	50	RoHS & Green	NIPDAU	N / A for Pkg Type	-40 to 85	TL7702AIP	Samples
TL7705ACD	ACTIVE	SOIC	D	8	75	RoHS & Green	NIPDAU	Level-1-260C-UNLIM	0 to 70	7705AC	Samples
TL7705ACDE4	ACTIVE	SOIC	D	8	75	RoHS & Green	NIPDAU	Level-1-260C-UNLIM	0 to 70	7705AC	Samples
TL7705ACDG4	ACTIVE	SOIC	D	8	75	RoHS & Green	NIPDAU	Level-1-260C-UNLIM	0 to 70	7705AC	Samples
TL7705ACDR	ACTIVE	SOIC	D	8	2500	RoHS & Green	NIPDAU	Level-1-260C-UNLIM	0 to 70	7705AC	Samples
TL7705ACDRG4	ACTIVE	SOIC	D	8	2500	RoHS & Green	NIPDAU	Level-1-260C-UNLIM	0 to 70	7705AC	Samples
TL7705ACP	ACTIVE	PDIP	P	8	50	RoHS & Green	NIPDAU	N / A for Pkg Type	0 to 70	TL7705ACP	Samples
TL7705ACPE4	ACTIVE	PDIP	P	8	50	RoHS & Green	NIPDAU	N / A for Pkg Type	0 to 70	TL7705ACP	Samples
TL7705ACPSR	ACTIVE	SO	PS	8	2000	RoHS & Green	NIPDAU	Level-1-260C-UNLIM	0 to 70	T7705A	Samples
TL7705AID	ACTIVE	SOIC	D	8	75	RoHS & Green	NIPDAU	Level-1-260C-UNLIM	-40 to 85	7705AI	Samples
TL7705AIDG4	ACTIVE	SOIC	D	8	75	RoHS & Green	NIPDAU	Level-1-260C-UNLIM	-40 to 85	7705AI	Samples
TL7705AIDR	ACTIVE	SOIC	D	8	2500	RoHS & Green	NIPDAU	Level-1-260C-UNLIM	-40 to 85	7705AI	Samples

Orderable Device	Status (1)	Package Type	Package Drawing	Pins	Package Qty	Eco Plan (2)	Lead finish/ Ball material (6)	MSL Peak Temp (3)	Op Temp (°C)	Device Marking (4/5)	Samples
TL7705AIDRG4	ACTIVE	SOIC	D	8	2500	RoHS & Green	NIPDAU	Level-1-260C-UNLIM	-40 to 85	7705AI	Samples
TL7705AIP	ACTIVE	PDIP	P	8	50	RoHS & Green	NIPDAU	N / A for Pkg Type	-40 to 85	TL7705AIP	Samples
TL7709ACD	ACTIVE	SOIC	D	8	75	RoHS & Green	NIPDAU	Level-1-260C-UNLIM	0 to 70	7709AC	Samples
TL7709ACDG4	ACTIVE	SOIC	D	8	75	RoHS & Green	NIPDAU	Level-1-260C-UNLIM	0 to 70	7709AC	Samples
TL7709ACDR	ACTIVE	SOIC	D	8	2500	RoHS & Green	NIPDAU	Level-1-260C-UNLIM	0 to 70	7709AC	Samples
TL7709ACP	ACTIVE	PDIP	P	8	50	RoHS & Green	NIPDAU	N / A for Pkg Type	0 to 70	TL7709ACP	Samples
TL7712ACD	ACTIVE	SOIC	D	8	75	RoHS & Green	NIPDAU	Level-1-260C-UNLIM	0 to 70	7712AC	Samples
TL7712ACDE4	ACTIVE	SOIC	D	8	75	RoHS & Green	NIPDAU	Level-1-260C-UNLIM	0 to 70	7712AC	Samples
TL7712ACDG4	ACTIVE	SOIC	D	8	75	RoHS & Green	NIPDAU	Level-1-260C-UNLIM	0 to 70	7712AC	Samples
TL7712ACDR	ACTIVE	SOIC	D	8	2500	RoHS & Green	NIPDAU	Level-1-260C-UNLIM	0 to 70	7712AC	Samples
TL7712ACDRE4	ACTIVE	SOIC	D	8	2500	RoHS & Green	NIPDAU	Level-1-260C-UNLIM	0 to 70	7712AC	Samples
TL7712ACDRG4	ACTIVE	SOIC	D	8	2500	RoHS & Green	NIPDAU	Level-1-260C-UNLIM	0 to 70	7712AC	Samples
TL7712ACP	ACTIVE	PDIP	P	8	50	RoHS & Green	NIPDAU	N / A for Pkg Type	0 to 70	TL7712ACP	Samples
TL7712AIDR	ACTIVE	SOIC	D	8	2500	RoHS & Green	NIPDAU	Level-1-260C-UNLIM		7712AI	Samples
TL7715ACD	ACTIVE	SOIC	D	8	75	RoHS & Green	NIPDAU	Level-1-260C-UNLIM	0 to 70	7715AC	Samples
TL7715ACDE4	ACTIVE	SOIC	D	8	75	RoHS & Green	NIPDAU	Level-1-260C-UNLIM	0 to 70	7715AC	Samples
TL7715ACP	ACTIVE	PDIP	P	8	50	RoHS & Green	NIPDAU	N / A for Pkg Type	0 to 70	TL7715ACP	Samples

(1) The marketing status values are defined as follows:
ACTIVE: Product device recommended for new designs.
LIFEBUY: TI has announced that the device will be discontinued, and a lifetime-buy period is in effect.
NRND: Not recommended for new designs. Device is in production to support existing customers, but TI does not recommend using this part in a new design.
PREVIEW: Device has been announced but is not in production. Samples may or may not be available.
OBSOLETE: TI has discontinued the production of the device.

(2) **RoHS:** TI defines "RoHS" to mean semiconductor products that are compliant with the current EU RoHS requirements for all 10 RoHS substances, including the requirement that RoHS substance do not exceed 0.1% by weight in homogeneous materials. Where designed to be soldered at high temperatures, "RoHS" products are suitable for use in specified lead-free processes. TI may reference these types of products as "Pb-Free".
RoHS Exempt: TI defines "RoHS Exempt" to mean products that contain lead but are compliant with EU RoHS pursuant to a specific EU RoHS exemption.
Green: TI defines "Green" to mean the content of Chlorine (Cl) and Bromine (Br) based flame retardants meet JS709B low halogen requirements of <=1000ppm threshold. Antimony trioxide based flame retardants must also meet the <=1000ppm threshold requirement.

(3) MSL, Peak Temp. - The Moisture Sensitivity Level rating according to the JEDEC industry standard classifications, and peak solder temperature.

(4) There may be additional marking, which relates to the logo, the lot trace code information, or the environmental category on the device.

(5) Multiple Device Markings will be inside parentheses. Only one Device Marking contained in parentheses and separated by a "~" will appear on a device. If a line is indented then it is a continuation of the previous line and the two combined represent the entire Device Marking for that device.

(6) Lead finish/Ball material - Orderable Devices may have multiple material finish options. Finish options are separated by a vertical ruled line. Lead finish/Ball material values may wrap to two lines if the finish value exceeds the maximum column width.

Important Information and Disclaimer: The information provided on this page represents TI's knowledge and belief as of the date that it is provided. TI bases its knowledge and belief on information provided by third parties, and makes no representation or warranty as to the accuracy of such information. Efforts are underway to better integrate information from third parties. TI has taken and continues to take reasonable steps to provide representative and accurate information but may not have conducted destructive testing or chemical analysis on incoming materials and chemicals. TI and TI suppliers consider certain information to be proprietary, and thus CAS numbers and other limited information may not be available for release.

In no event shall TI's liability arising out of such information exceed the total purchase price of the TI part(s) at issue in this document sold by TI to Customer on an annual basis.

TAPE AND REEL INFORMATION

REEL DIMENSIONS

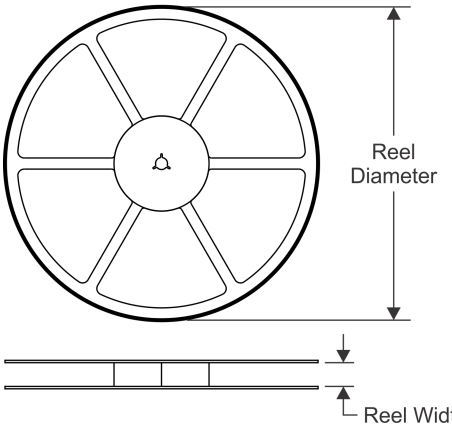

TAPE DIMENSIONS

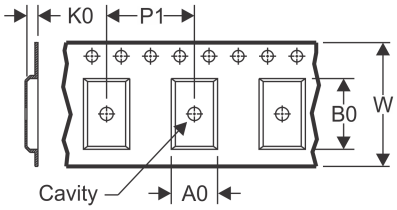

A0	Dimension designed to accommodate the component width
B0	Dimension designed to accommodate the component length
K0	Dimension designed to accommodate the component thickness
W	Overall width of the carrier tape
P1	Pitch between successive cavity centers

QUADRANT ASSIGNMENTS FOR PIN 1 ORIENTATION IN TAPE

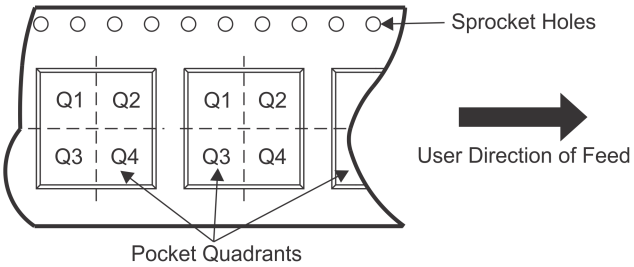

*All dimensions are nominal

Device	Package Type	Package Drawing	Pins	SPQ	Reel Diameter (mm)	Reel Width W1 (mm)	A0 (mm)	B0 (mm)	K0 (mm)	P1 (mm)	W (mm)	Pin1 Quadrant
TL7702ACDR	SOIC	D	8	2500	330.0	12.4	6.4	5.2	2.1	8.0	12.0	Q1
TL7702ACDR	SOIC	D	8	2500	330.0	12.4	6.4	5.2	2.1	8.0	12.0	Q1
TL7702AIDR	SOIC	D	8	2500	330.0	12.4	6.4	5.2	2.1	8.0	12.0	Q1
TL7705ACDR	SOIC	D	8	2500	330.0	12.4	6.4	5.2	2.1	8.0	12.0	Q1
TL7705ACPSR	SO	PS	8	2000	330.0	16.4	8.35	6.6	2.4	12.0	16.0	Q1
TL7705AIDR	SOIC	D	8	2500	330.0	12.4	6.4	5.2	2.1	8.0	12.0	Q1
TL7709ACDR	SOIC	D	8	2500	330.0	12.4	6.4	5.2	2.1	8.0	12.0	Q1
TL7712ACDR	SOIC	D	8	2500	330.0	12.4	6.4	5.2	2.1	8.0	12.0	Q1
TL7712AIDR	SOIC	D	8	2500	330.0	12.4	6.4	5.2	2.1	8.0	12.0	Q1

TAPE AND REEL BOX DIMENSIONS

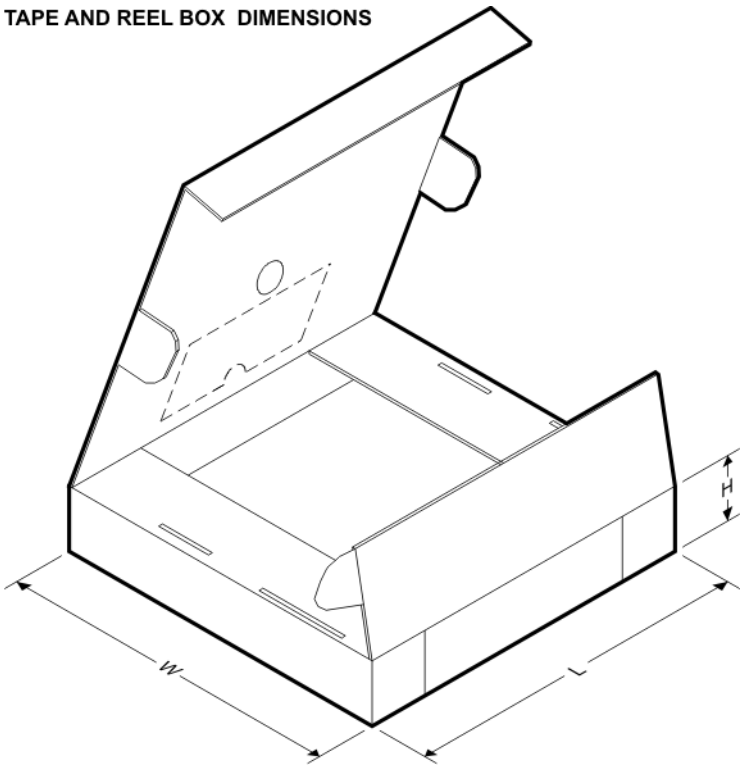

*All dimensions are nominal

Device	Package Type	Package Drawing	Pins	SPQ	Length (mm)	Width (mm)	Height (mm)
TL7702ACDR	SOIC	D	8	2500	340.5	336.1	25.0
TL7702ACDR	SOIC	D	8	2500	853.0	449.0	35.0
TL7702AIDR	SOIC	D	8	2500	340.5	336.1	25.0
TL7705ACDR	SOIC	D	8	2500	340.5	336.1	25.0
TL7705ACPSR	SO	PS	8	2000	853.0	449.0	35.0
TL7705AIDR	SOIC	D	8	2500	340.5	336.1	25.0
TL7709ACDR	SOIC	D	8	2500	340.5	336.1	25.0
TL7712ACDR	SOIC	D	8	2500	340.5	336.1	25.0
TL7712AIDR	SOIC	D	8	2500	340.5	336.1	25.0

TUBE

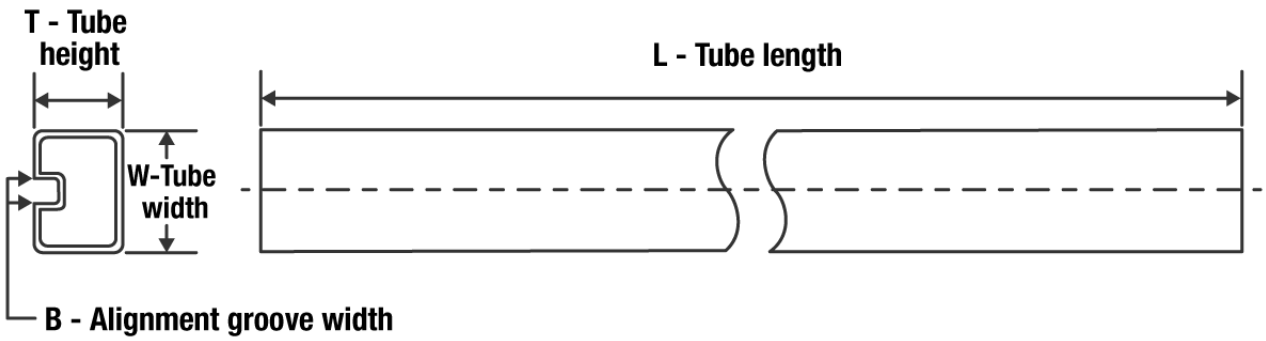

*All dimensions are nominal

Device	Package Name	Package Type	Pins	SPQ	L (mm)	W (mm)	T (µm)	B (mm)
TL7702ACD	D	SOIC	8	75	507	8	3940	4.32
TL7702ACD	D	SOIC	8	75	506.6	8	3940	4.32
TL7702ACP	P	PDIP	8	50	506	13.97	11230	4.32
TL7702AID	D	SOIC	8	75	507	8	3940	4.32
TL7702AIP	P	PDIP	8	50	506	13.97	11230	4.32
TL7702AIPE4	P	PDIP	8	50	506	13.97	11230	4.32
TL7705ACD	D	SOIC	8	75	507	8	3940	4.32
TL7705ACDE4	D	SOIC	8	75	507	8	3940	4.32
TL7705ACDG4	D	SOIC	8	75	507	8	3940	4.32
TL7705ACP	P	PDIP	8	50	506	13.97	11230	4.32
TL7705ACPE4	P	PDIP	8	50	506	13.97	11230	4.32
TL7705AID	D	SOIC	8	75	507	8	3940	4.32
TL7705AIDG4	D	SOIC	8	75	507	8	3940	4.32
TL7705AIP	P	PDIP	8	50	506	13.97	11230	4.32
TL7709ACD	D	SOIC	8	75	507	8	3940	4.32
TL7709ACDG4	D	SOIC	8	75	507	8	3940	4.32
TL7709ACP	P	PDIP	8	50	506	13.97	11230	4.32
TL7712ACD	D	SOIC	8	75	507	8	3940	4.32
TL7712ACDE4	D	SOIC	8	75	507	8	3940	4.32
TL7712ACDG4	D	SOIC	8	75	507	8	3940	4.32
TL7712ACP	P	PDIP	8	50	506	13.97	11230	4.32
TL7715ACD	D	SOIC	8	75	507	8	3940	4.32
TL7715ACDE4	D	SOIC	8	75	507	8	3940	4.32
TL7715ACP	P	PDIP	8	50	506	13.97	11230	4.32

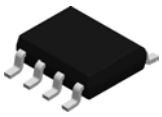

PACKAGE OUTLINE

D0008A

SOIC - 1.75 mm max height

SMALL OUTLINE INTEGRATED CIRCUIT

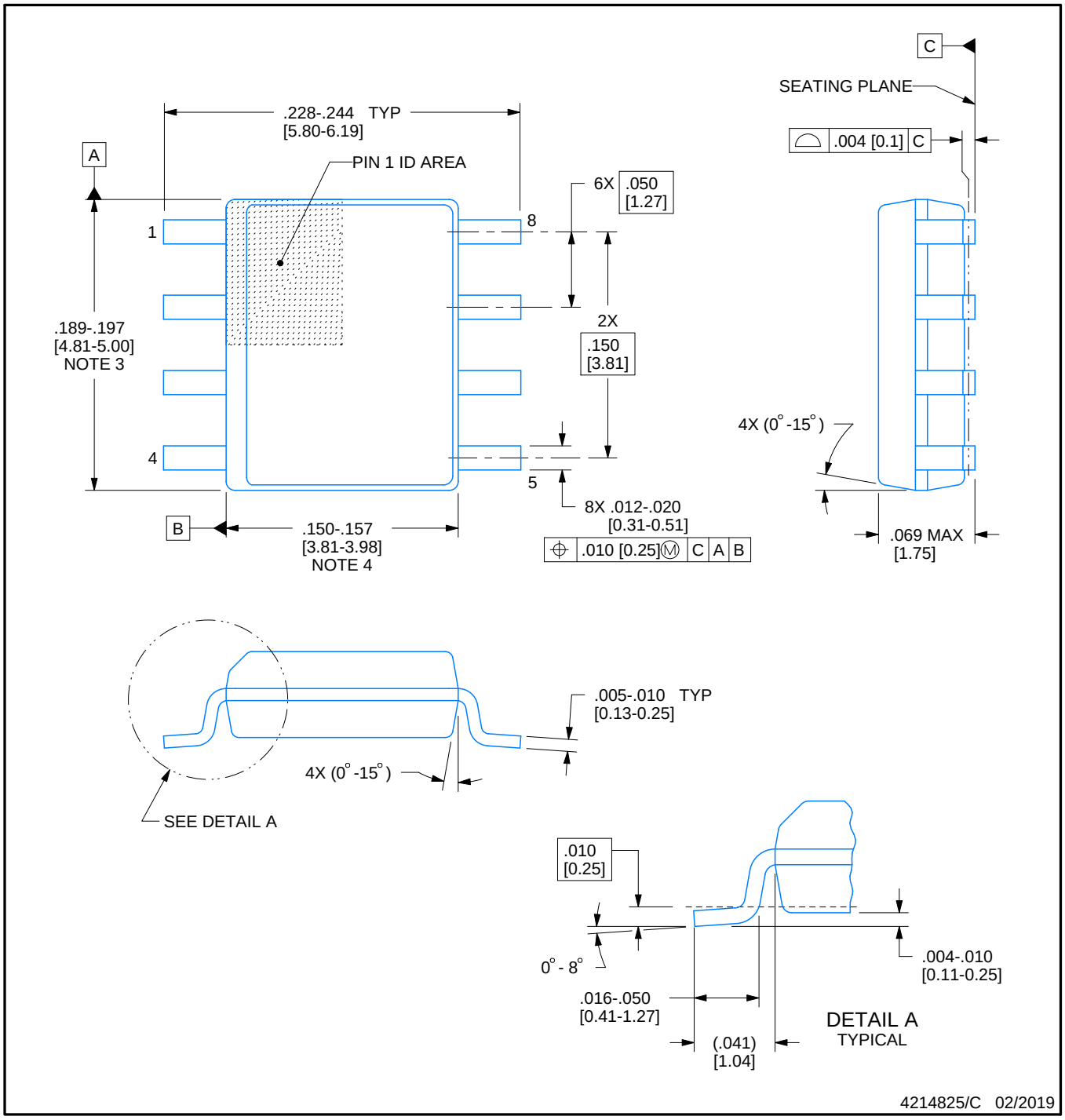

NOTES:

1. Linear dimensions are in inches [millimeters]. Dimensions in parenthesis are for reference only. Controlling dimensions are in inches. Dimensioning and tolerancing per ASME Y14.5M.
2. This drawing is subject to change without notice.
3. This dimension does not include mold flash, protrusions, or gate burrs. Mold flash, protrusions, or gate burrs shall not exceed .006 [0.15] per side.
4. This dimension does not include interlead flash.
5. Reference JEDEC registration MS-012, variation AA.

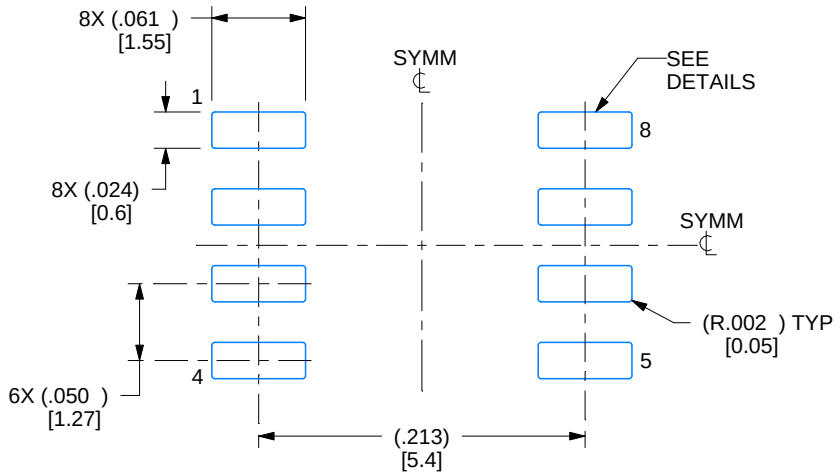

LAND PATTERN EXAMPLE
EXPOSED METAL SHOWN
SCALE:8X

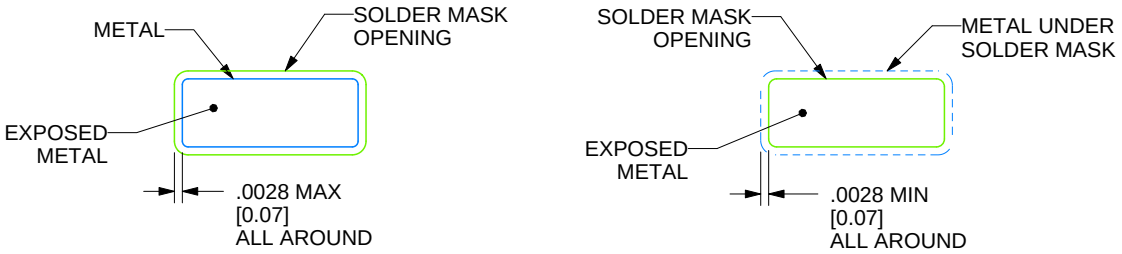

SOLDER MASK DETAILS

4214825/C 02/2019

NOTES: (continued)

6. Publication IPC-7351 may have alternate designs.
7. Solder mask tolerances between and around signal pads can vary based on board fabrication site.

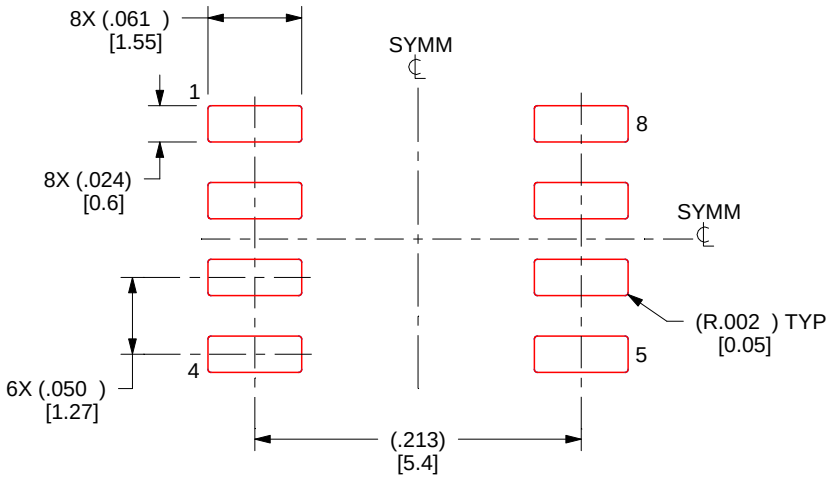

SOLDER PASTE EXAMPLE
BASED ON .005 INCH [0.125 MM] THICK STENCIL
SCALE:8X

4214825/C 02/2019

NOTES: (continued)

8. Laser cutting apertures with trapezoidal walls and rounded corners may offer better paste release. IPC-7525 may have alternate design recommendations.
9. Board assembly site may have different recommendations for stencil design.

MECHANICAL DATA

PS (R-PDSO-G8) **PLASTIC SMALL-OUTLINE PACKAGE**

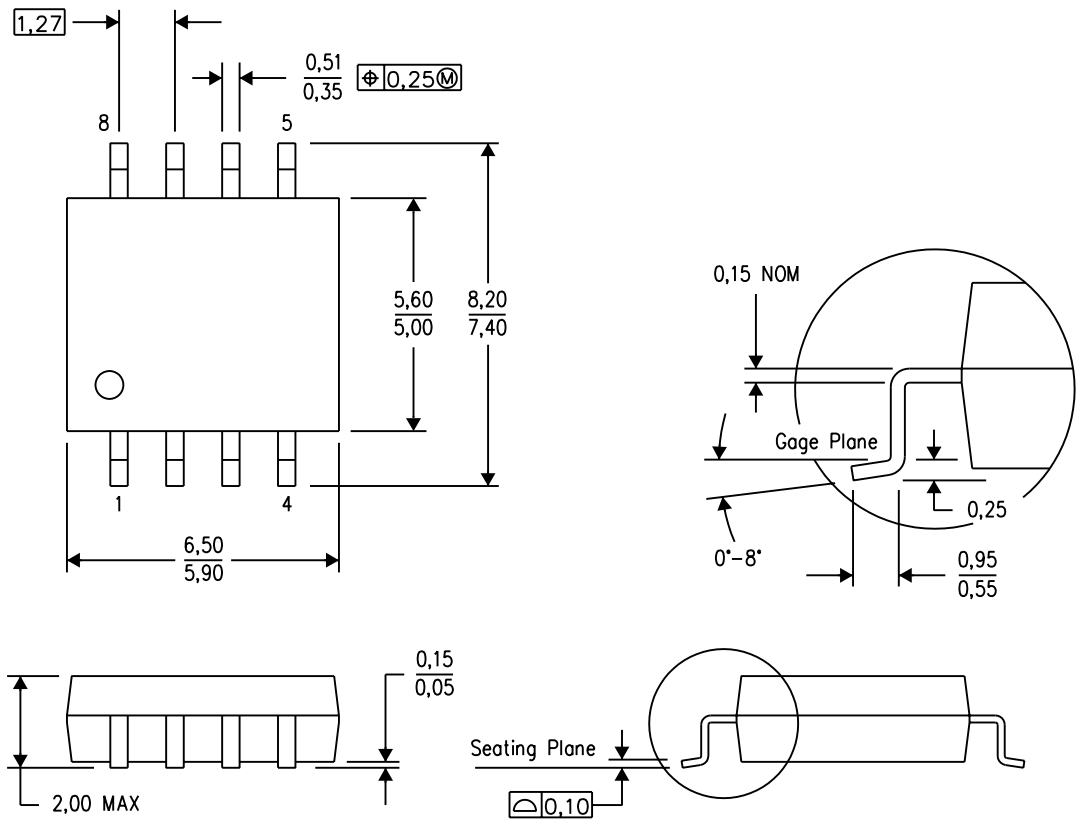

NOTES:
A. All linear dimensions are in millimeters.
B. This drawing is subject to change without notice.
C. Body dimensions do not include mold flash or protrusion, not to exceed 0,15.

PS (R-PDSO-G8) PLASTIC SMALL OUTLINE

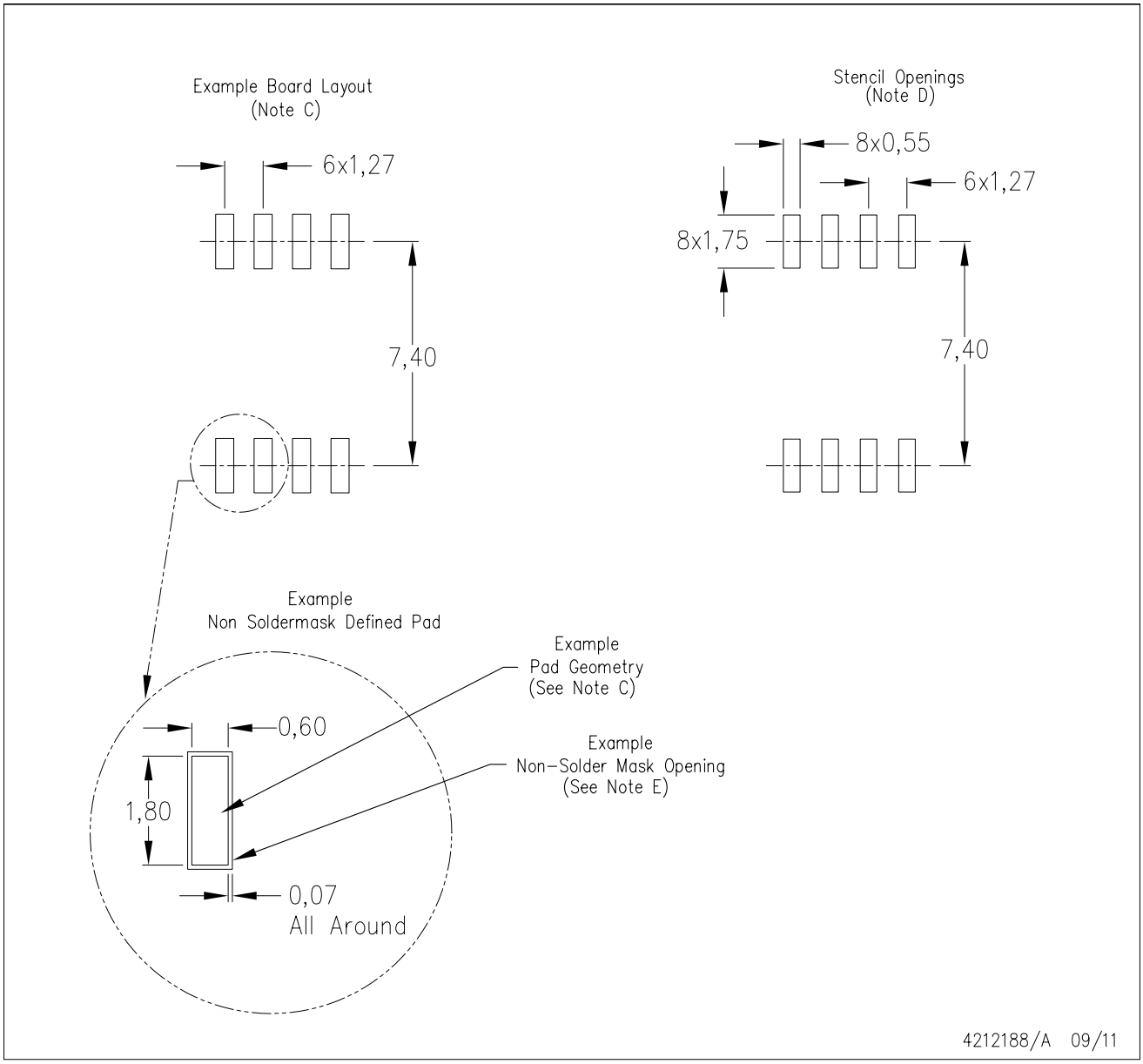

NOTES:
A. All linear dimensions are in millimeters.
B. This drawing is subject to change without notice.
C. Publication IPC-7351 is recommended for alternate designs.
D. Laser cutting apertures with trapezoidal walls and also rounding corners will offer better paste release. Customers should contact their board assembly site for stencil design recommendations. Refer to IPC-7525 for other stencil recommendations.
E. Customers should contact their board fabrication site for solder mask tolerances between and around signal pads.

P (R–PDIP–T8) PLASTIC DUAL–IN–LINE PACKAGE

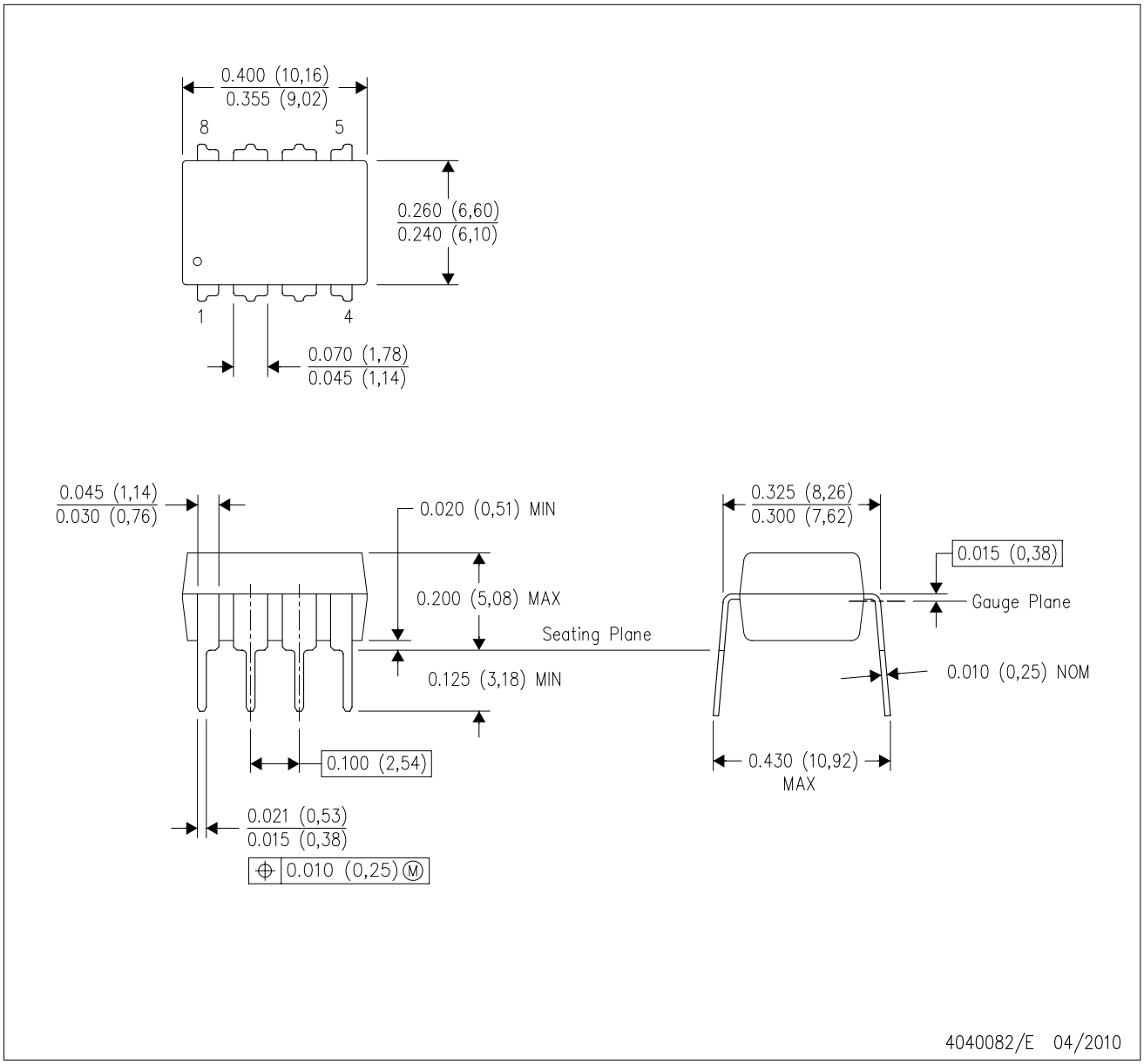

NOTES:
A. All linear dimensions are in inches (millimeters).
B. This drawing is subject to change without notice.
C. Falls within JEDEC MS–001 variation BA.

IMPORTANT NOTICE AND DISCLAIMER

TI PROVIDES TECHNICAL AND RELIABILITY DATA (INCLUDING DATA SHEETS), DESIGN RESOURCES (INCLUDING REFERENCE DESIGNS), APPLICATION OR OTHER DESIGN ADVICE, WEB TOOLS, SAFETY INFORMATION, AND OTHER RESOURCES “AS IS” AND WITH ALL FAULTS, AND DISCLAIMS ALL WARRANTIES, EXPRESS AND IMPLIED, INCLUDING WITHOUT LIMITATION ANY IMPLIED WARRANTIES OF MERCHANTABILITY, FITNESS FOR A PARTICULAR PURPOSE OR NON-INFRINGEMENT OF THIRD PARTY INTELLECTUAL PROPERTY RIGHTS.

These resources are intended for skilled developers designing with TI products. You are solely responsible for (1) selecting the appropriate TI products for your application, (2) designing, validating and testing your application, and (3) ensuring your application meets applicable standards, and any other safety, security, regulatory or other requirements.

These resources are subject to change without notice. TI grants you permission to use these resources only for development of an application that uses the TI products described in the resource. Other reproduction and display of these resources is prohibited. No license is granted to any other TI intellectual property right or to any third party intellectual property right. TI disclaims responsibility for, and you will fully indemnify TI and its representatives against, any claims, damages, costs, losses, and liabilities arising out of your use of these resources.

TI’s products are provided subject to TI’s Terms of Sale or other applicable terms available either on ti.com or provided in conjunction with such TI products. TI’s provision of these resources does not expand or otherwise alter TI’s applicable warranties or warranty disclaimers for TI products.

TI objects to and rejects any additional or different terms you may have proposed.

Mailing Address: Texas Instruments, Post Office Box 655303, Dallas, Texas 75265
Copyright © 2022, Texas Instruments Incorporated