TLC59213x 8-Bit Parallel In and Out Darlington Source Driver With Latch

1 Features

- Output Current on Each Channel (I_{OUT} Max = –500 mA)
- $V_{CE(sus)}$ = 13.2 V
- Input Compatible With TTL/5-V CMOS
- Clear ($\overline{CLR}$) and Clock (CLK) TTL/CMOS Control Inputs
- CLR Control Input to Off the Output
- Darlington Source Driver
- Clock Input Up to 1 MHz
- Enhanced Hold Time (t_h) on TLC59213A
- Temperature Range: –40°C to 85°C

2 Applications

- Lamp and Display (LED)
- Hammer
- Relay

3 Description

The TLC59213 and TLC59213A are 8-bit source drivers with input latch with CLK input and $\overline{CLR}$ to set the output OFF. The TLC59213 and TLC59213A have large output source currents up to 500 mA with Darlington transistor and collectors tied to V_{CC}. These feature make the device optimum level of driving the matrix of ink jet printer head, LEDs, and the scan-side of resistor's matrix. The TLC59213 and TLC59213A differ only in the Data Hold Time Specification (t_h).

The clamp diode is between output and ground for switching inductive load.

All inputs are TTL/CMOS, which enable to any logic-level inputs such as MCU, CPU or SN74LV594 (serial to parallel) and the output enable LED matrix display. It can also be used with another device sink driver such as TLC59210, TLC59211 and TLC59212.

Device Information(1)

PART NUMBER	PACKAGE	BODY SIZE (NOM)
TLC59213 TLC59213A	PDIP (20)	24.33 mm × 6.35 mm
	TSSOP (20)	6.50 mm × 4.40 mm

(1) For all available packages, see the orderable addendum at the end of the data sheet.

Typical Application Diagram÷

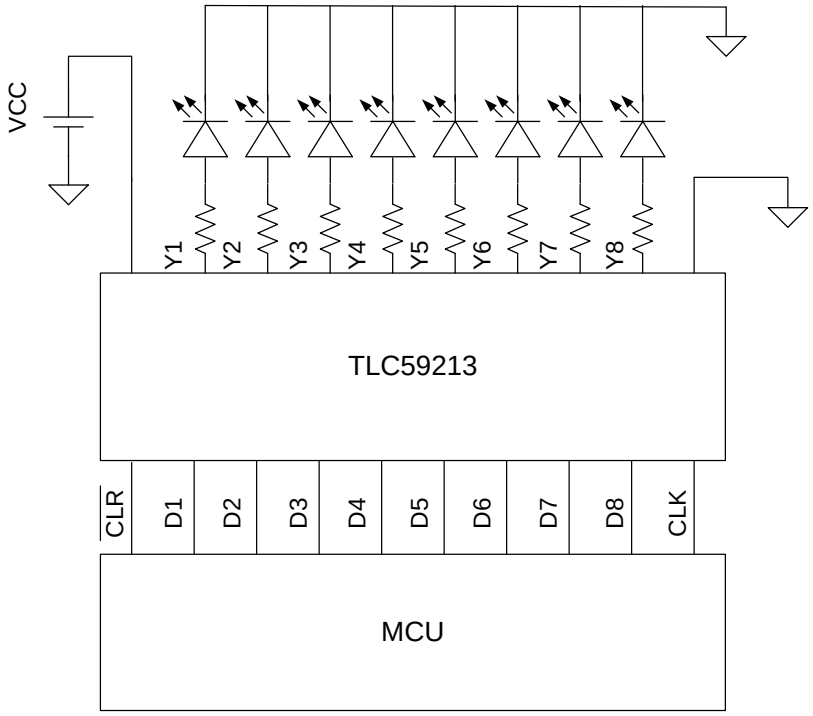

An IMPORTANT NOTICE at the end of this data sheet addresses availability, warranty, changes, use in safety-critical applications, intellectual property matters and other important disclaimers. PRODUCTION DATA.

Table of Contents

1 Features ... 1
2 Applications ... 1
3 Description ... 1
4 Revision History ... 2
5 Pin Configuration and Functions ... 3
6 Specifications ... 4
6.1 Absolute Maximum Ratings ... 4
6.2 ESD Ratings ... 4
6.3 Recommended Operating Conditions ... 4
6.4 Electrical Characteristics ... 4
6.5 Timing Requirements ... 5
6.6 Switching Characteristics ... 5
6.7 Typical Characteristics ... 5
7 Parameter Measurement Information ... 6
8 Detailed Description ... 7
8.1 Overview ... 7
8.2 Functional Block Diagram ... 7
8.3 Feature Description ... 7
8.4 Device Functional Modes ... 7
9 Application and Implementation ... 8
9.1 Application Information ... 8
9.2 Typical Application ... 8
10 Power Supply Recommendations ... 9
11 Layout ... 10
11.1 Layout Guidelines ... 10
11.2 Layout Example ... 10
12 Device and Documentation Support ... 11
12.1 Community Resources ... 11
12.2 Trademarks ... 11
12.3 Electrostatic Discharge Caution ... 11
12.4 Glossary ... 11
13 Mechanical, Packaging, and Orderable Information ... 11

4 Revision History

NOTE: Page numbers for previous revisions may differ from page numbers in the current version.

Changes from Revision A (March 2010) to Revision B	Page
• Added *Pin Configuration and Functions* section, *ESD Ratings* table, *Feature Description* section, *Device Functional Modes*, *Application and Implementation* section, *Power Supply Recommendations* section, *Layout* section, *Device and Documentation Support* section, and *Mechanical, Packaging, and Orderable Information* section	1

Copyright © 2009–2015, Texas Instruments Incorporated

5 Pin Configuration and Functions

N or PW Package
20-Pin PDIP or TSSOP
Top View

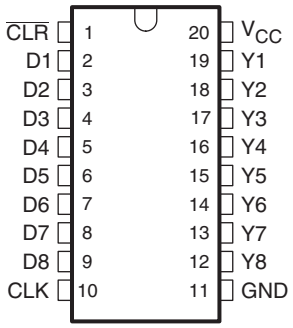

Pin Functions

PIN		I/O	DESCRIPTION
NAME	NO.		
$\overline{CLR}$	1	I	Direct clear of output
D1	2	I	Input control to the current source driver
D2	3	I	Input control to the current source driver
D3	4	I	Input control to the current source driver
D4	5	I	Input control to the current source driver
D5	6	I	Input control to the current source driver
D6	7	I	Input control to the current source driver
D7	8	I	Input control to the current source driver
D8	9	I	Input control to the current source driver
CLK	10	I	Clock to positive edge triggered D flipflops
GND	11	—	Ground
Y8	12	O	Output to load
Y7	13	O	Output to load
Y6	14	O	Output to load
Y5	15	O	Output to load
Y4	16	O	Output to load
Y3	17	O	Output to load
Y2	18	O	Output to load
Y1	19	O	Output to load
V_{cc}	20	I	Supply voltage

Copyright © 2009–2015, Texas Instruments Incorporated

6 Specifications

6.1 Absolute Maximum Ratings[(1)]

over operating free-air temperature range (unless otherwise noted)

			MIN	MAX	UNIT
V_{DD}	Supply voltage		–0.5	15	V
V_I	Input voltage		–0.5	V_{CC} + 0.5	V
	Collector-emitter voltage		–0.5	15	V
I_O	Peak output current			–500	mA
I_{IK}	Input clamp current	V_I < 0 V		–20	mA
I_{OK}	Output clamp current	V_O < 0 V		–500	mA
T_{stg}	Storage temperature		–65	150	°C

(1) Stresses beyond those listed under *Absolute Maximum Ratings* may cause permanent damage to the device. These are stress ratings only, which do not imply functional operation of the device at these or any other conditions beyond those indicated under *Recommended Operating Conditions*. Exposure to absolute-maximum-rated conditions for extended periods may affect device reliability.

6.2 ESD Ratings

			VALUE	UNIT
$V_{(ESD)}$	Electrostatic discharge	Human body model (HBM), per ANSI/ESDA/JEDEC JS-001[(1)]	±2000	V
		Charged-device model (CDM), per JEDEC specification JESD22-C101[(2)]	±1000	

(1) JEDEC document JEP155 states that 500-V HBM allows safe manufacturing with a standard ESD control process.
(2) JEDEC document JEP157 states that 250-V CDM allows safe manufacturing with a standard ESD control process.

6.3 Recommended Operating Conditions

				MIN	MAX	UNIT
V_{CC}	Supply voltage			4.5	13.2	V
V_{IH}	High-level input voltage			2		V
V_{IL}	Low-level input voltage				0.8	V
I_O	Output current (8 channel)	N package	Duty cycle < 10%		400	mA
			Duty cycle < 50%		200	
		PW package	Duty cycle < 10%		350	
			Duty cycle < 50%		170	
T_A	Operating free-air temperature			–40	85	°C

6.4 Electrical Characteristics

over recommended operating free-air temperature range (unless otherwise noted)

PARAMETER		TEST CONDITIONS		MIN	TYP	MAX	UNIT
I_{CEX}	Output leakage current	V_{CC} = 13.2 V, Outputs off				2	µA
$V_{CE(sus)}$	Output saturation voltage	I_{OUT} = –350 mA				2.35	V
		I_{OUT} = –225 mA				2.15	
		I_{OUT} = –100 mA				1.96	
I_I	Input current	V_{CC} = 13.2 V, V_I = 0 or 13.2 V				1	µA
V_f	Clamp forward voltage	I_f = –350 mA		–2			V
I_{CC}	Supply current	V_{CC} = 13.2 V, V_I = 0 or 13.2 V	All outputs OFF		4.6	13	mA
			All outputs ON		4.8	13	
C_I	Input capacitance					10	pF

Copyright © 2009–2015, Texas Instruments Incorporated

6.5 Timing Requirements

over recommended operating free-air temperature range (unless otherwise noted), see Figure 3

					MIN	MAX	UNIT
t_{su}	Setup time	D before CLK ↑			50		ns
		$\overline{CLR}$ high before CLK ↑			50		ns
t_h	Hold time	D after CLK ↑	TLC59213, TLC59213A	T_A = -40°C to 85°C	50		ns
			TLC59213	T_A = 0°C to 70°C	25		
			TLC59213A	T_A = 0°C to 70°C, V_{CC} = 4.5 V to 5.5 V	15		
				T_A = 0°C to 70°C, V_{CC} = 10.8 V to 13.2 V	19		
t_w	Pulse width	CLK, $\overline{CLR}$			100		ns

6.6 Switching Characteristics

over operating free-air temperature range (unless otherwise noted), see Figure 3

PARAMETER		FROM (INPUT)	TO (OUTPUT)	TEST CONDITIONS	T_A = 25°C			T_A = –40°C to 85°C		UNIT
					MIN	TYP	MAX	MIN	MAX	
t_{PLH}	Propagation delay time, low-to-high level output	CLK	Y	RL = 25 Ω, C_L = 15 pF		107	200		250	ns
t_{PHL}	Propagation delay time, high-to-low level output	CLK	Y	RL = 25 Ω, C_L = 15 pF		111	200		250	ns
t_{PHLR}	Propagation delay time, high-to-low level output	$\overline{CLR}$	Y	RL = 25 Ω, C_L = 15 pF		104	200		250	ns

6.7 Typical Characteristics

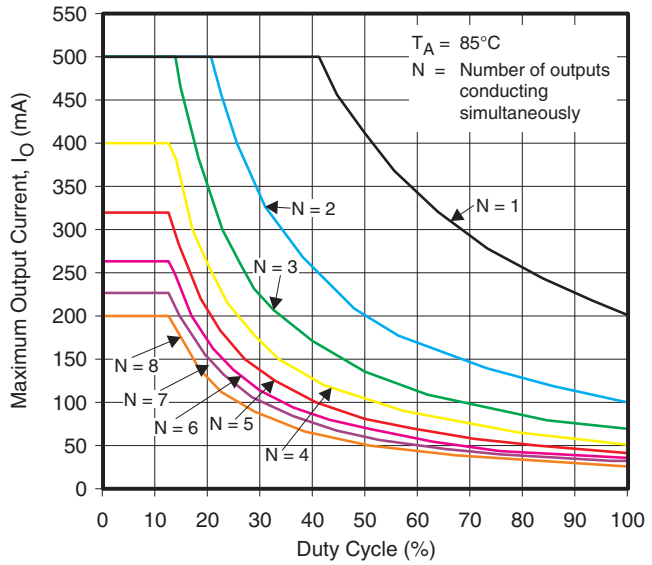

Figure 1. Maximum Output Current vs Duty Cycle (TSSOP (PW) Package)

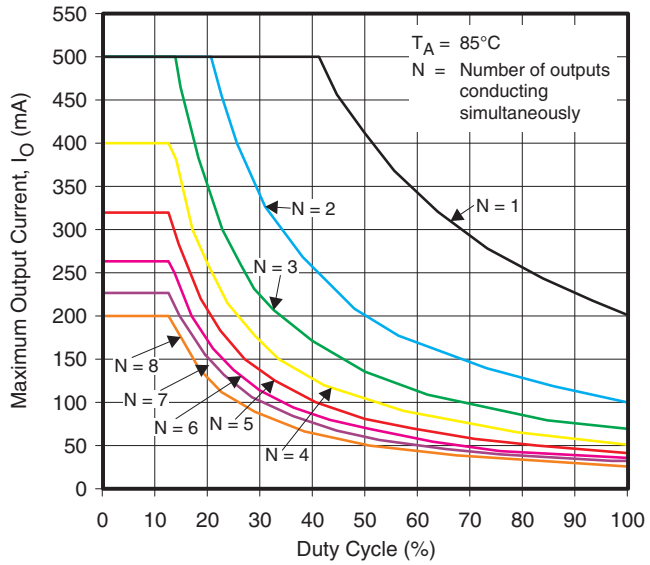

Figure 2. Maximum Output Current vs Duty Cycle (DIP (N) Package)

7 Parameter Measurement Information

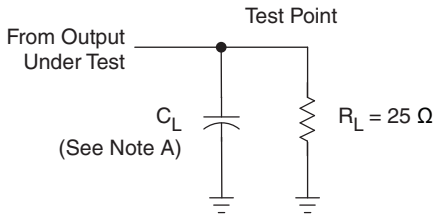

TEST CIRCUIT

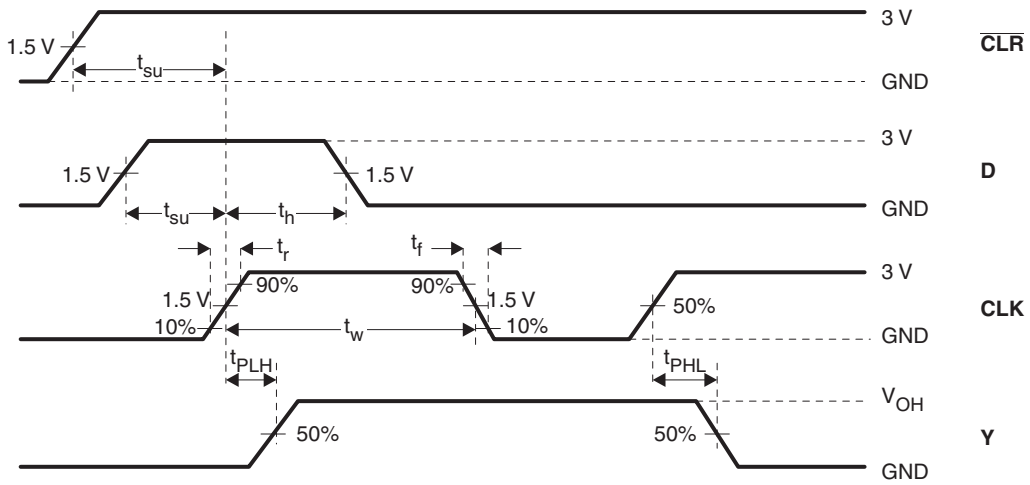

VOLTAGE WAVEFORMS

A. C_L includes probe and jig capacitance.

B. All input pulses are supplied by generators having the following characteristics: PRR ≤ 1 MHz, Z_O = 50 Ω, t_r ≤ 3 ns, and t_f ≤ 3 ns.

C. The outputs are measured one at a time with one transition per measurement.

Figure 3. Test Circuit and Voltage Waveforms

Copyright © 2009–2015, Texas Instruments Incorporated

8 Detailed Description

8.1 Overview

The TLC59213 device is an 8-bit Darlington source driver with latch for large-output source currents up to 500 mA.

8.2 Functional Block Diagram

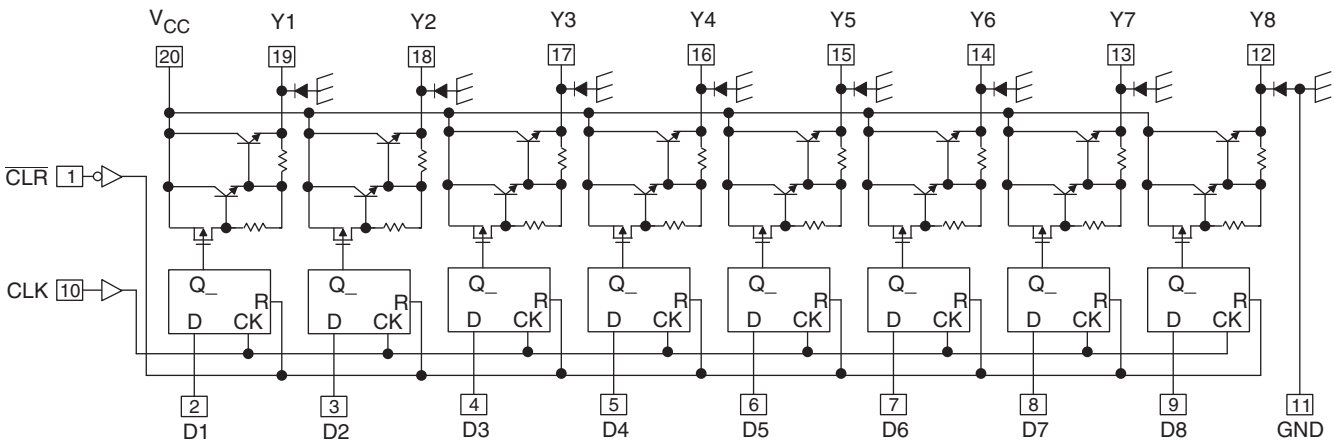

(1) This symbol is in accordance with ANSI/IEEE Standard 91-1984 and IEC Publication 617-12.

8.3 Feature Description

Each of the 8 channels is controlled by its input (Dn), a direct clear ($\overline{CLR}$), and clock (CLK) through a positive-edge-triggered D-type flip-flops. Information at the data (D) input meeting the setup time requirements is transferred to the output (Y) on the positive-going edge of the clock (CLK) pulse. When CLK is at either the high or low level, the D-input has no effect at the output. When $\overline{CLR}$ is at low level, the D-input has no effect at the output.

8.4 Device Functional Modes

Table 1 lists the functional modes of the TLC59213.

Table 1. Function Table (Each Latch)(1)

INPUTS			OUTPUT Y
$\overline{CLR}$	CLK	D	
L	X	X	Z (OFF)
H	↑	L	Z (OFF)
H	↑	H	H (ON)
H	L	X	Y_0
H	↓	X	Y_0

(1) L: Low-level
H: High-level
X: Irrelevant
↑: Rising edge
↓: Falling edge
Z : High-impedance (OFF)

9 Application and Implementation

NOTE

Information in the following applications sections is not part of the TI component specification, and TI does not warrant its accuracy or completeness. TI's customers are responsible for determining suitability of components for their purposes. Customers should validate and test their design implementation to confirm system functionality.

9.1 Application Information

In LED display application, TLC59213 is used to drive the current source for 8 LEDs in parallel. LED display pattern can be created by providing different bit pattern. At every positive clock edge, new bit pattern will be transferred to LED display.

9.2 Typical Application

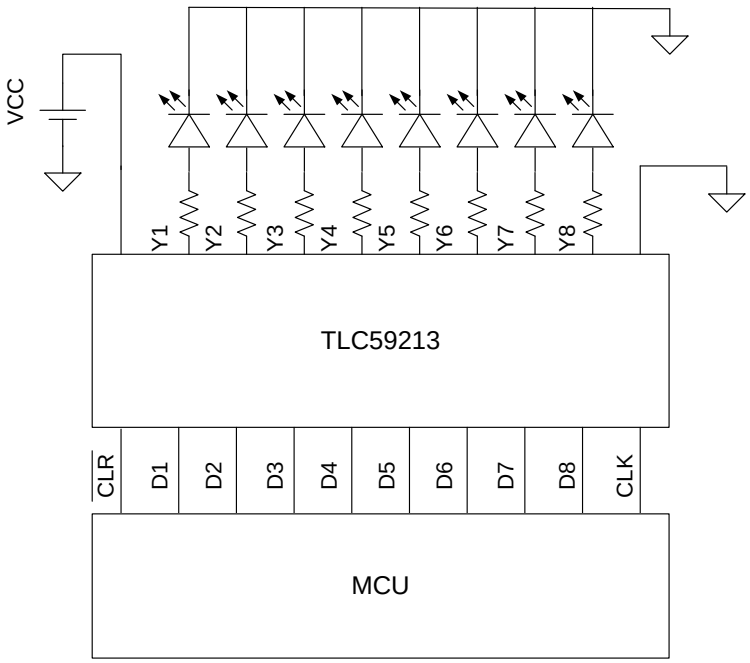

Figure 4. Typical Application Diagram

9.2.1 Design Requirements

For LED display application, LED is selected based on the application. The current level is determined by the required brightness. Given the available supply, the resistor value could be determined. The maximum output current is constrained by the duty cycle. See Figure 1 and Figure 2.

9.2.2 Detailed Design Procedure

The selection of supply voltage (VCC), LED, and resistor sets the current of the LED.

$$VR + VL + VCE = VCC \quad (1)$$

$$I = (VCC - VL - VCE) / R \quad (2)$$

VR is the voltage drop across the resistor, VL is the voltage drop across the LED when LED is on, VCE is the collector-to-emitter voltage of the Darlington current source driver, when the driver is enabled. For example, when VCC = 12 V, VL = 2.9 V, and VCE = 1.6 V, a 75-Ω resistor is used to obtain output current 100 mA.

Copyright © 2009–2015, Texas Instruments Incorporated

Typical Application (continued)

9.2.3 Application Curve

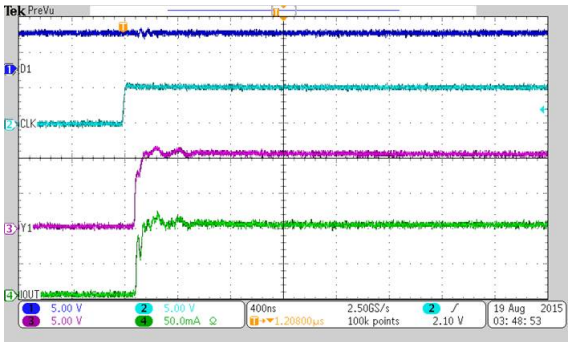

Figure 5. Output Voltage and Current Response

10 Power Supply Recommendations

The supply voltage to TLC59213 is from 4.5 V to 13.2 V.

11 Layout

11.1 Layout Guidelines

The traces that carry current from the output pins must be wide enough to support the current.

11.2 Layout Example

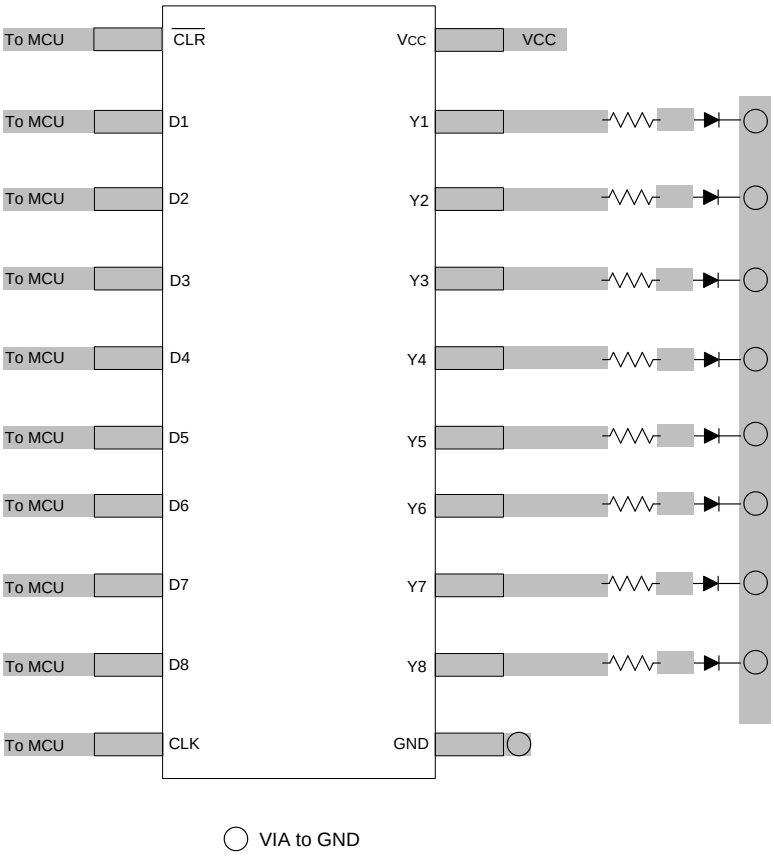

Figure 6. Layout Recommendation

Copyright © 2009–2015, Texas Instruments Incorporated

12 Device and Documentation Support

12.1 Community Resources

The following links connect to TI community resources. Linked contents are provided "AS IS" by the respective contributors. They do not constitute TI specifications and do not necessarily reflect TI's views; see TI's Terms of Use.

TI E2E™ Online Community ***TI's Engineer-to-Engineer (E2E) Community.*** Created to foster collaboration among engineers. At e2e.ti.com, you can ask questions, share knowledge, explore ideas and help solve problems with fellow engineers.

Design Support ***TI's Design Support*** Quickly find helpful E2E forums along with design support tools and contact information for technical support.

12.2 Trademarks

E2E is a trademark of Texas Instruments.
All other trademarks are the property of their respective owners.

12.3 Electrostatic Discharge Caution

These devices have limited built-in ESD protection. The leads should be shorted together or the device placed in conductive foam during storage or handling to prevent electrostatic damage to the MOS gates.

12.4 Glossary

SLYZ022 — *TI Glossary*.

This glossary lists and explains terms, acronyms, and definitions.

13 Mechanical, Packaging, and Orderable Information

The following pages include mechanical, packaging, and orderable information. This information is the most current data available for the designated devices. This data is subject to change without notice and revision of this document. For browser-based versions of this data sheet, refer to the left-hand navigation.

PACKAGING INFORMATION

Orderable Device	Status (1)	Package Type	Package Drawing	Pins	Package Qty	Eco Plan (2)	Lead finish/ Ball material (6)	MSL Peak Temp (3)	Op Temp (°C)	Device Marking (4/5)	Samples
TLC59213AIN	ACTIVE	PDIP	N	20	20	RoHS & Non-Green	NIPDAU	N / A for Pkg Type	-40 to 85	TLC59213AIN	Samples
TLC59213AIPW	ACTIVE	TSSOP	PW	20	70	RoHS & Green	NIPDAU	Level-1-260C-UNLIM		Y59213A	Samples
TLC59213AIPWR	ACTIVE	TSSOP	PW	20	2000	RoHS & Green	NIPDAU	Level-1-260C-UNLIM	-40 to 85	Y59213A	Samples
TLC59213AIPWT	ACTIVE	TSSOP	PW	20	250	RoHS & Green	NIPDAU	Level-1-260C-UNLIM	-40 to 85	Y59213A	Samples
TLC59213IN	ACTIVE	PDIP	N	20	20	RoHS & Non-Green	NIPDAU	N / A for Pkg Type	-40 to 85	TLC59213IN	Samples
TLC59213IPWR	ACTIVE	TSSOP	PW	20	2000	RoHS & Green	NIPDAU	Level-1-260C-UNLIM	-40 to 85	Y59213	Samples

(1) The marketing status values are defined as follows:
ACTIVE: Product device recommended for new designs.
LIFEBUY: TI has announced that the device will be discontinued, and a lifetime-buy period is in effect.
NRND: Not recommended for new designs. Device is in production to support existing customers, but TI does not recommend using this part in a new design.
PREVIEW: Device has been announced but is not in production. Samples may or may not be available.
OBSOLETE: TI has discontinued the production of the device.

(2) **RoHS:** TI defines "RoHS" to mean semiconductor products that are compliant with the current EU RoHS requirements for all 10 RoHS substances, including the requirement that RoHS substance do not exceed 0.1% by weight in homogeneous materials. Where designed to be soldered at high temperatures, "RoHS" products are suitable for use in specified lead-free processes. TI may reference these types of products as "Pb-Free".
RoHS Exempt: TI defines "RoHS Exempt" to mean products that contain lead but are compliant with EU RoHS pursuant to a specific EU RoHS exemption.
Green: TI defines "Green" to mean the content of Chlorine (Cl) and Bromine (Br) based flame retardants meet JS709B low halogen requirements of <=1000ppm threshold. Antimony trioxide based flame retardants must also meet the <=1000ppm threshold requirement.

(3) MSL, Peak Temp. - The Moisture Sensitivity Level rating according to the JEDEC industry standard classifications, and peak solder temperature.

(4) There may be additional marking, which relates to the logo, the lot trace code information, or the environmental category on the device.

(5) Multiple Device Markings will be inside parentheses. Only one Device Marking contained in parentheses and separated by a "~" will appear on a device. If a line is indented then it is a continuation of the previous line and the two combined represent the entire Device Marking for that device.

(6) Lead finish/Ball material - Orderable Devices may have multiple material finish options. Finish options are separated by a vertical ruled line. Lead finish/Ball material values may wrap to two lines if the finish value exceeds the maximum column width.

Important Information and Disclaimer: The information provided on this page represents TI's knowledge and belief as of the date that it is provided. TI bases its knowledge and belief on information provided by third parties, and makes no representation or warranty as to the accuracy of such information. Efforts are underway to better integrate information from third parties. TI has taken and continues to take reasonable steps to provide representative and accurate information but may not have conducted destructive testing or chemical analysis on incoming materials and chemicals. TI and TI suppliers consider certain information to be proprietary, and thus CAS numbers and other limited information may not be available for release.

In no event shall TI's liability arising out of such information exceed the total purchase price of the TI part(s) at issue in this document sold by TI to Customer on an annual basis.

TAPE AND REEL INFORMATION

REEL DIMENSIONS

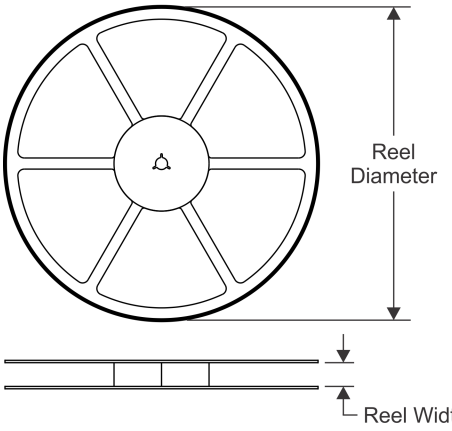

TAPE DIMENSIONS

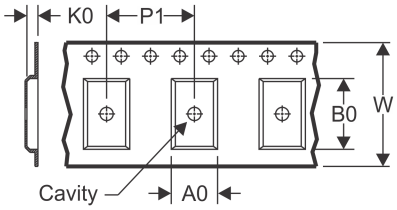

A0	Dimension designed to accommodate the component width
B0	Dimension designed to accommodate the component length
K0	Dimension designed to accommodate the component thickness
W	Overall width of the carrier tape
P1	Pitch between successive cavity centers

QUADRANT ASSIGNMENTS FOR PIN 1 ORIENTATION IN TAPE

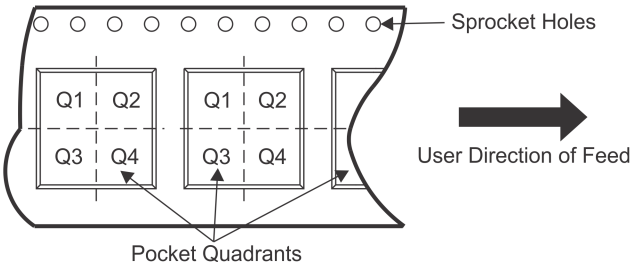

*All dimensions are nominal

Device	Package Type	Package Drawing	Pins	SPQ	Reel Diameter (mm)	Reel Width W1 (mm)	A0 (mm)	B0 (mm)	K0 (mm)	P1 (mm)	W (mm)	Pin1 Quadrant
TLC59213AIPWR	TSSOP	PW	20	2000	330.0	16.4	6.95	7.1	1.6	8.0	16.0	Q1
TLC59213AIPWT	TSSOP	PW	20	250	180.0	16.4	6.95	7.0	1.4	8.0	16.0	Q1
TLC59213IPWR	TSSOP	PW	20	2000	330.0	16.4	6.95	7.0	1.4	8.0	16.0	Q1

TAPE AND REEL BOX DIMENSIONS

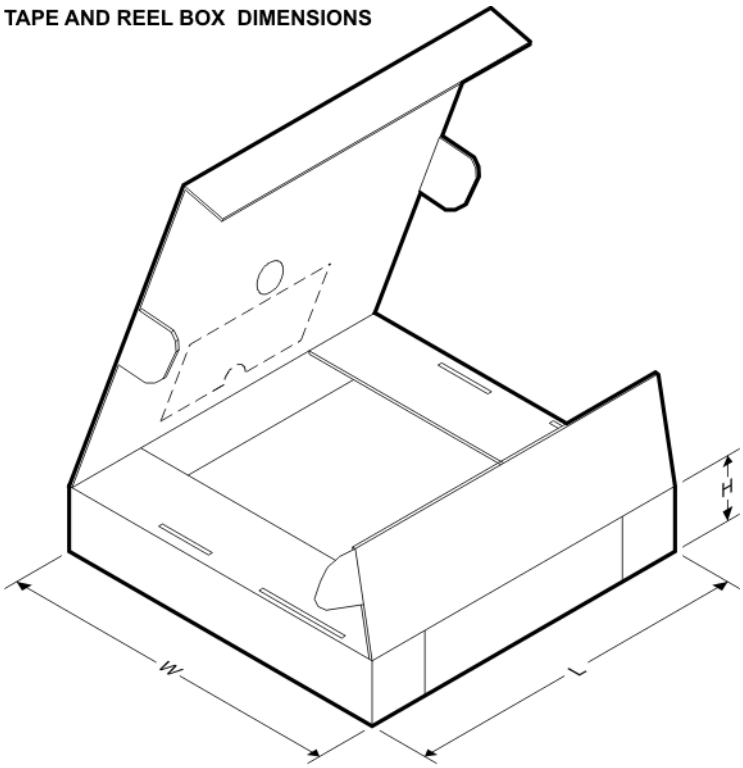

*All dimensions are nominal

Device	Package Type	Package Drawing	Pins	SPQ	Length (mm)	Width (mm)	Height (mm)
TLC59213AIPWR	TSSOP	PW	20	2000	853.0	449.0	35.0
TLC59213AIPWT	TSSOP	PW	20	250	210.0	185.0	35.0
TLC59213IPWR	TSSOP	PW	20	2000	853.0	449.0	35.0

TUBE

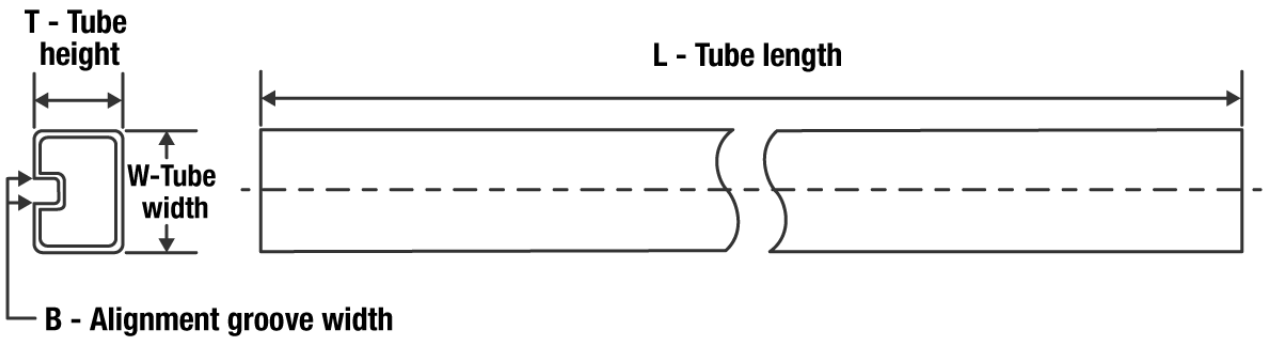

*All dimensions are nominal

Device	Package Name	Package Type	Pins	SPQ	L (mm)	W (mm)	T (µm)	B (mm)
TLC59213AIN	N	PDIP	20	20	506	13.97	11230	4.32
TLC59213AIPW	PW	TSSOP	20	70	530	10.2	3600	3.5
TLC59213IN	N	PDIP	20	20	506	13.97	11230	4.32

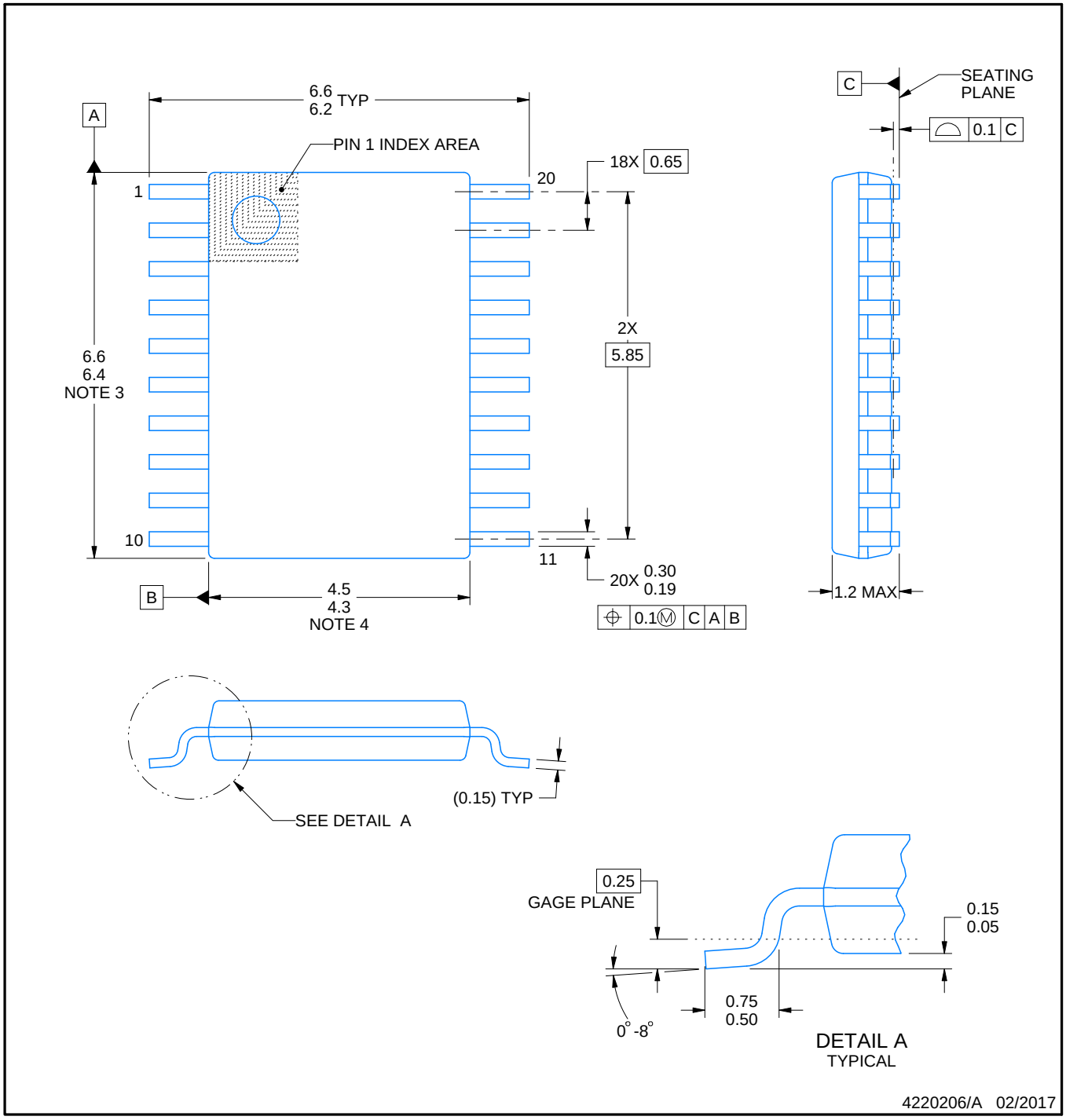

NOTES:

1. All linear dimensions are in millimeters. Any dimensions in parenthesis are for reference only. Dimensioning and tolerancing per ASME Y14.5M.
2. This drawing is subject to change without notice.
3. This dimension does not include mold flash, protrusions, or gate burrs. Mold flash, protrusions, or gate burrs shall not exceed 0.15 mm per side.
4. This dimension does not include interlead flash. Interlead flash shall not exceed 0.25 mm per side.
5. Reference JEDEC registration MO-153.

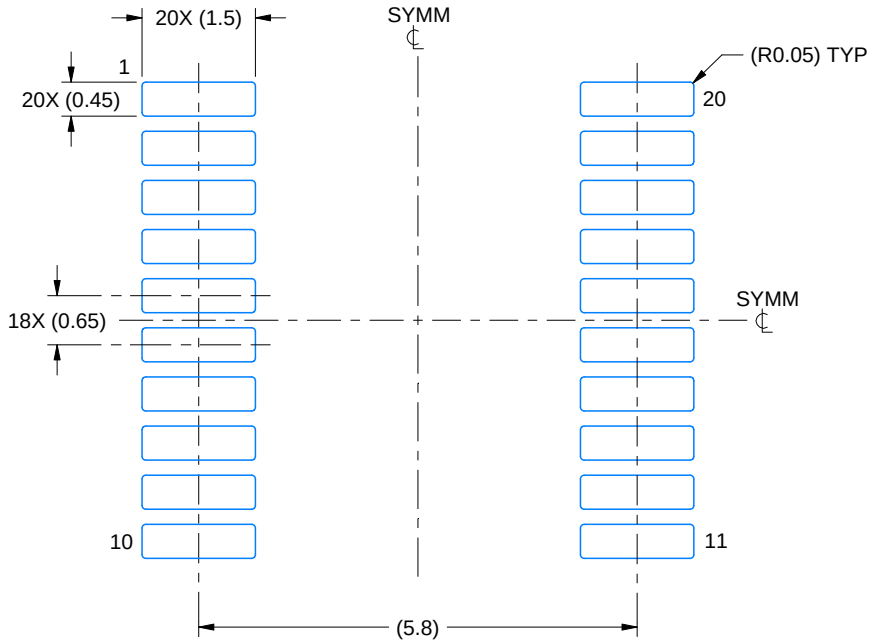

LAND PATTERN EXAMPLE
EXPOSED METAL SHOWN
SCALE: 10X

NON-SOLDER MASK DEFINED (PREFERRED)

SOLDER MASK DEFINED

SOLDER MASK DETAILS

4220206/A 02/2017

NOTES: (continued)

6. Publication IPC-7351 may have alternate designs.
7. Solder mask tolerances between and around signal pads can vary based on board fabrication site.

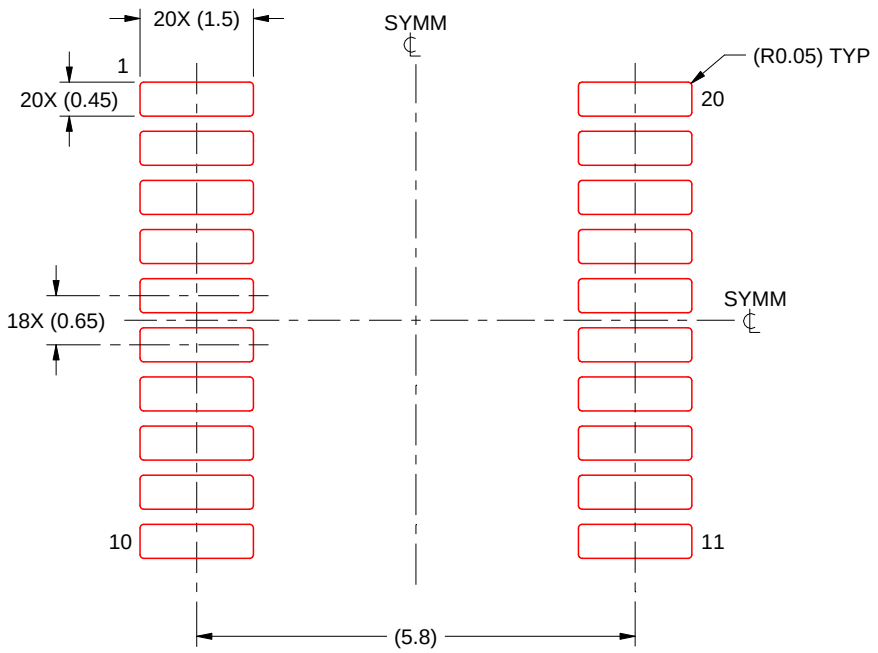

SOLDER PASTE EXAMPLE
BASED ON 0.125 mm THICK STENCIL
SCALE: 10X

4220206/A 02/2017

NOTES: (continued)

8. Laser cutting apertures with trapezoidal walls and rounded corners may offer better paste release. IPC-7525 may have alternate design recommendations.
9. Board assembly site may have different recommendations for stencil design.

PW (R–PDSO–G20) PLASTIC SMALL OUTLINE

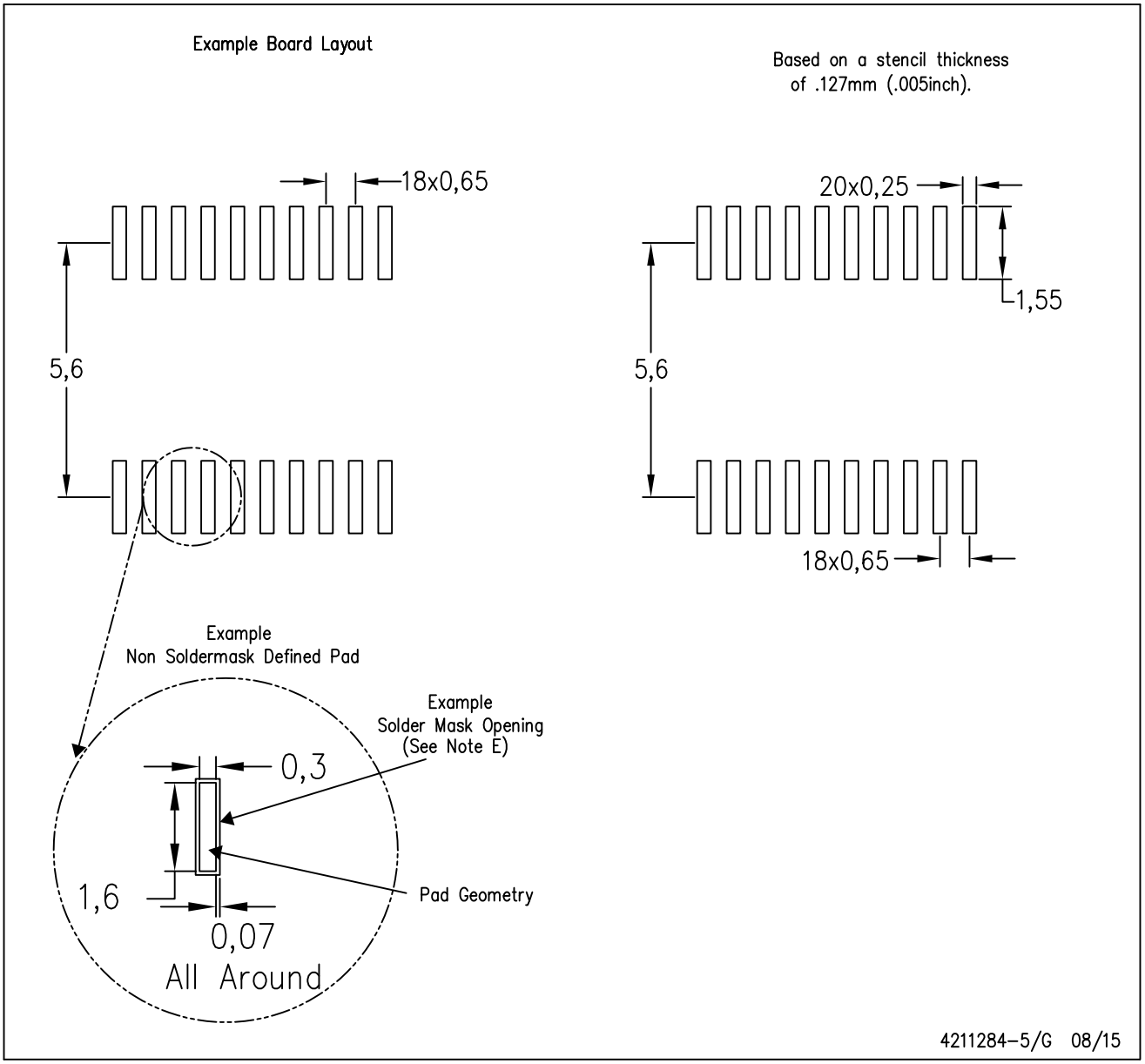

NOTES:
A. All linear dimensions are in millimeters.
B. This drawing is subject to change without notice.
C. Publication IPC–7351 is recommended for alternate design.
D. Laser cutting apertures with trapezoidal walls and also rounding corners will offer better paste release. Customers should contact their board assembly site for stencil design recommendations. Refer to IPC–7525 for other stencil recommendations.
E. Customers should contact their board fabrication site for solder mask tolerances between and around signal pads.

N (R–PDIP–T**) PLASTIC DUAL–IN–LINE PACKAGE

16 PINS SHOWN

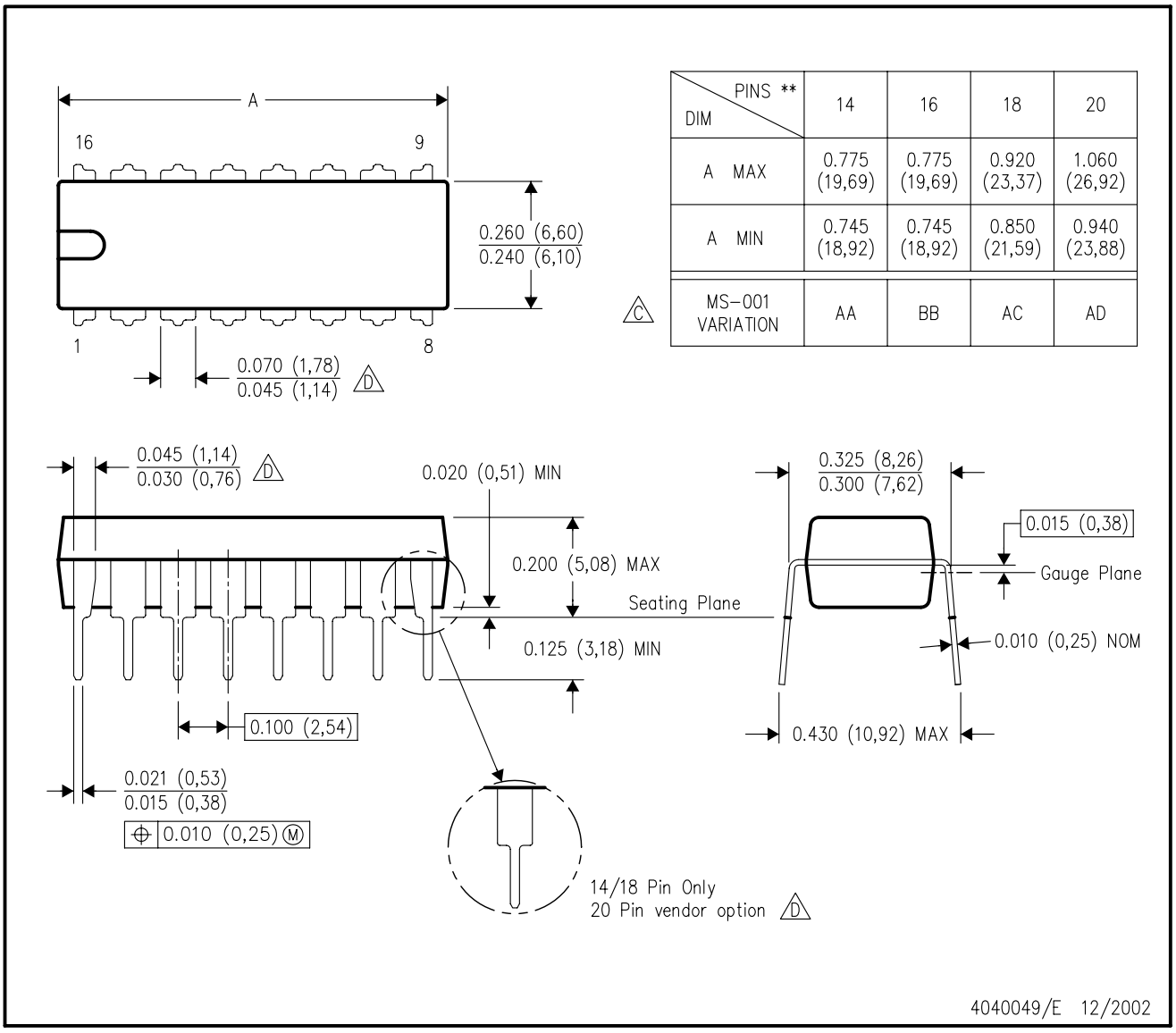

DIM \ PINS **	14	16	18	20
A MAX	0.775 (19,69)	0.775 (19,69)	0.920 (23,37)	1.060 (26,92)
A MIN	0.745 (18,92)	0.745 (18,92)	0.850 (21,59)	0.940 (23,88)
MS–001 VARIATION (C)	AA	BB	AC	AD

NOTES:
A. All linear dimensions are in inches (millimeters).
B. This drawing is subject to change without notice.
C. Falls within JEDEC MS–001, except 18 and 20 pin minimum body length (Dim A).
D. The 20 pin end lead shoulder width is a vendor option, either half or full width.

IMPORTANT NOTICE AND DISCLAIMER

TI PROVIDES TECHNICAL AND RELIABILITY DATA (INCLUDING DATA SHEETS), DESIGN RESOURCES (INCLUDING REFERENCE DESIGNS), APPLICATION OR OTHER DESIGN ADVICE, WEB TOOLS, SAFETY INFORMATION, AND OTHER RESOURCES “AS IS” AND WITH ALL FAULTS, AND DISCLAIMS ALL WARRANTIES, EXPRESS AND IMPLIED, INCLUDING WITHOUT LIMITATION ANY IMPLIED WARRANTIES OF MERCHANTABILITY, FITNESS FOR A PARTICULAR PURPOSE OR NON-INFRINGEMENT OF THIRD PARTY INTELLECTUAL PROPERTY RIGHTS.

These resources are intended for skilled developers designing with TI products. You are solely responsible for (1) selecting the appropriate TI products for your application, (2) designing, validating and testing your application, and (3) ensuring your application meets applicable standards, and any other safety, security, regulatory or other requirements.

These resources are subject to change without notice. TI grants you permission to use these resources only for development of an application that uses the TI products described in the resource. Other reproduction and display of these resources is prohibited. No license is granted to any other TI intellectual property right or to any third party intellectual property right. TI disclaims responsibility for, and you will fully indemnify TI and its representatives against, any claims, damages, costs, losses, and liabilities arising out of your use of these resources.

TI’s products are provided subject to TI’s Terms of Sale or other applicable terms available either on ti.com or provided in conjunction with such TI products. TI’s provision of these resources does not expand or otherwise alter TI’s applicable warranties or warranty disclaimers for TI products.

TI objects to and rejects any additional or different terms you may have proposed.

Mailing Address: Texas Instruments, Post Office Box 655303, Dallas, Texas 75265
Copyright © 2022, Texas Instruments Incorporated