TLV1117 Adjustable and Fixed Low-Dropout Voltage Regulator

1 Features

- 1.5-V, 1.8-V, 2.5-V, 3.3-V, 5-V, and Adjustable-Output Voltage Options
- Output Current of 800 mA
- Specified Dropout Voltage at Multiple Current Levels
- 0.2% Line Regulation Maximum
- 0.4% Load Regulation Maximum

2 Applications

- Electronic Points of Sale
- Medical, Health, and Fitness Applications
- Printers
- Appliances and White Goods
- TV Set-Top Boxes

3 Description

The TLV1117 device is a positive low-dropout voltage regulator designed to provide up to 800 mA of output current. The device is available in 1.5-V, 1.8-V, 2.5-V, 3.3-V, 5-V, and adjustable-output voltage options. All internal circuitry is designed to operate down to 1-V input-to-output differential. Dropout voltage is specified at a maximum of 1.3 V at 800 mA, decreasing at lower load currents.

Device Information

ORDER NUMBER	PACKAGE (PIN)	BODY SIZE
TLV1117DCY	SOT-223 (4)	6.50 mm × 3.50 mm
TLV1117DRJ	SON (8)	4.00 mm × 4.00 mm
TLV1117KVU	TO-252 (3)	6.60 mm × 6.10 mm
TLV1117KCS	TO-220 (3)	10.16 mm × 8.70 mm
TLV1117KCT	TO-220 (3)	10.16 mm × 8.59 mm
TLV1117KTT	DDPAK, TO-263 (3)	10.18 mm × 8.41 mm

4 Simplified Schematic

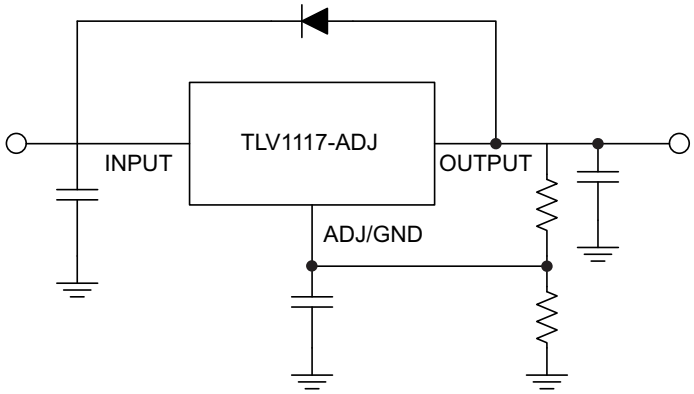

An IMPORTANT NOTICE at the end of this data sheet addresses availability, warranty, changes, use in safety-critical applications, intellectual property matters and other important disclaimers. PRODUCTION DATA.

Table of Contents

1 Features ... 1
2 Applications ... 1
3 Description ... 1
4 Simplified Schematic ... 1
5 Revision History ... 2
6 Pin Configuration and Functions ... 3
7 Specifications ... 4
7.1 Absolute Maximum Ratings ... 4
7.2 Handling Ratings ... 4
7.3 Recommended Operating Conditions ... 4
7.4 Thermal Information ... 5
7.5 TLV1117C Electrical Characteristics ... 6
7.6 TLV1117I Electrical Characteristics ... 7
7.7 Typical Characteristics ... 8
8 Detailed Description ... 10
8.1 Overview ... 10
8.2 Functional Block Diagram ... 10
8.3 Feature Description ... 10
8.4 Device Functional Modes ... 10
9 Application and Implementation ... 12
9.1 Typical Application ... 12
10 Power Supply Recommendations ... 13
11 Layout ... 13
11.1 Layout Guidelines ... 13
11.2 Layout Example ... 13
12 Device and Documentation Support ... 14
12.1 Trademarks ... 14
12.2 Electrostatic Discharge Caution ... 14
12.3 Glossary ... 14
13 Mechanical, Packaging, and Orderable Information ... 14

Changes from Revision K (April 2013) to Revision L	Page
• Updated data sheet to new TI standards – no specification changes.	1
• Deleted Ordering Information table.	1
• Added Applications.	1
• Added Device and Documentation Support section.	14
• Added Mechanical, Packaging, and Orderable Information section.	14

5 Revision History

Changes from Revision J (April 2013) to Revision K	Page
• Added additional package options.	3
• Added ESD warning.	14

Copyright © 2004–2014, Texas Instruments Incorporated

6 Pin Configuration and Functions

KTT (TO-263) PACKAGE (TOP VIEW)

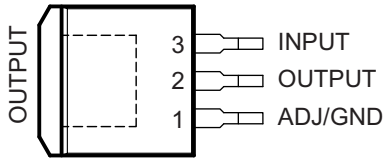

KVU (TO-252) PACKAGE (TOP VIEW)

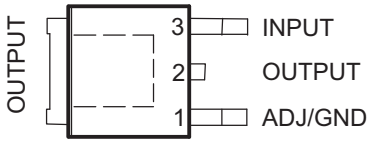

DCY (SOT-223) PACKAGE (TOP VIEW)

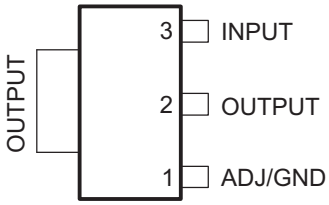

DRJ (QFN) PACKAGE (TOP VIEW)

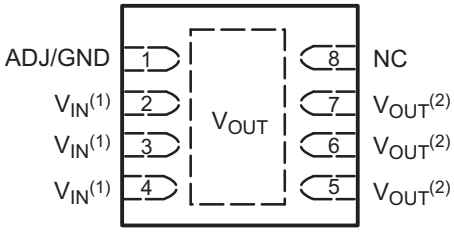

KCT, KCS (TO-220) PACKAGE (TOP VIEW)

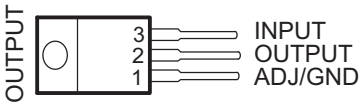

(1) V_{IN} pins (2, 3, 4) must be connected together.
(2) V_{OUT} pins (5, 6, 7) must be connected together.

Table 1. Pin Functions

PIN						TYPE	DESCRIPTION
NAME	KTT	KVU	DCY	DRJ	KCT		
ADJ/GND	1	1	1	1	1	I/O	Output voltage adjustment pin. Connect to a resistor divider.
INPUT	3	3	3	2, 3, 4	3	I	Voltage input
OUTPUT	2	2	2	5, 6, 7	2	O	Voltage output
NC	-	-	-	8	-	-	No connect

Copyright © 2004–2014, Texas Instruments Incorporated

7 Specifications

7.1 Absolute Maximum Ratings[(1)]

over operating free-air temperature range (unless otherwise noted)

		MIN	MAX	UNIT
V_{IN}	Continuous input voltage		16	V
T_J	Operating virtual-junction temperature		150	°C

(1) Stresses beyond those listed under *Absolute Maximum Ratings* may cause permanent damage to the device. These are stress ratings only, and functional operation of the device at these or any other conditions beyond those indicated under *Recommended Operating Conditions* is not implied. Exposure to absolute-maximum-rated conditions for extended periods may affect device reliability.

7.2 Handling Ratings

			MIN	MAX	UNIT
T_{stg}	Storage temperature range		–65	150	°C
$V_{(ESD)}$	Electrostatic discharge	Human body model (HBM), per ANSI/ESDA/JEDEC JS-001, all pins[(1)]	0	2500	V
		Charged device model (CDM), per JEDEC specification JESD22-C101, all pins[(2)]	0	1500	

(1) JEDEC document JEP155 states that 500-V HBM allows safe manufacturing with a standard ESD control process.
(2) JEDEC document JEP157 states that 250-V CDM allows safe manufacturing with a standard ESD control process.

7.3 Recommended Operating Conditions

			MIN[(1)]	MAX	UNIT
V_{IN}	Input voltage	TLV1117	2.7	15	V
		TLV1117-15	2.9	15	
		TLV1117-18	3.2	15	
		TLV1117-25	3.9	15	
		TLV1117-33	4.7	15	
		TLV1117-50	6.4	15	
I_O	Output current			0.8	A
T_J	Operating virtual-junction temperature	TLV1117C	0	125	°C
		TLV1117I	–40	125	

(1) The input-to-output differential across the regulator should provide for some margin against regulator operation at the maximum dropout (for a particular current value). This margin is needed to account for tolerances in both the input voltage (lower limit) and the output voltage (upper limit). The absolute minimum V_{IN} for a desired maximum output current can be calculated by the following:
$V_{IN(min)} = V_{OUT(max)} + V_{DO(max\ at\ rated\ current)}$

Copyright © 2004–2014, Texas Instruments Incorporated

7.4 Thermal Information

THERMAL METRIC[(1)(2)(3)]		TLV1117							UNITS
		PowerFlex							
		KTE (3 PINS)	KTP (3 PINS)	DRJ (8 PINS)	DCY (4 PINS)	KVU (3 PINS)	KCS, KCT (3 PINS)	KTT (3 PINS)	
$R_{\theta JA}$	Junction-to-ambient thermal resistance	38.6	49.2	38.3	104.3	50.9	30.1	27.5	°C/W
$R_{\theta JC(top)}$	Junction-to-case (top) thermal resistance	34.7	60.6	36.5	53.7	57.9	44.6	43.2	
$R_{\theta JB}$	Junction-to-board thermal resistance	3.2	3.1	60.5	5.7	34.8	1.2	17.3	
ψ_{JT}	Junction-to-top characterization parameter	5.9	8.7	0.2	3.1	6	5	2.8	
ψ_{JB}	Junction-to-board characterization parameter	3.1	3	12	5.5	23.7	1.2	9.3	
$R_{\theta JC(bot)}$	Junction-to-case (bottom) thermal resistance	3	3	4.7	n/a	0.4	0.4	0.3	
$R_{\theta JP}$	Thermal resistance between the die junction and the bottom of the exposed pad.	2.7	1.4	1.78	n/a	n/a	3	1.94	

(1) For more information about traditional and new thermal metrics, see the *IC Package Thermal Metrics* application report, SPRA953.
(2) For thermal estimates of this device based on PCB copper area, see the TI PCB Thermal Calculator.
(3) Maximum power dissipation is a function of $T_J(max)$, θ_{JA}, and T_A. The maximum allowable power dissipation at any allowable ambient temperature is $P_D = (T_J(max) – T_A) / \theta J_A$. Operating at the absolute maximum T_J of 150°C can affect reliability.

Copyright © 2004–2014, Texas Instruments Incorporated

7.5 TLV1117C Electrical Characteristics

T_J = 0°C to 125°C, all typical values are at T_J = 25°C (unless otherwise noted)

PARAMETER	TEST CONDITIONS (1)		MIN	TYP	MAX	UNIT
Reference voltage, V_{REF}	$V_{IN} – V_{OUT}$ = 2 V, I_{OUT} = 10 mA, T_J = 25°C	TLV1117	1.238	1.25	1.262	V
	$V_{IN} – V_{OUT}$ = 1.4 V to 10 V, I_{OUT} = 10 mA to 800 mA		1.225	1.25	1.27	
Output voltage, V_{OUT}	V_{IN} = 3.5 V, I_{OUT} = 10 mA, T_J = 25°C	TLV1117-15	1.485	1.5	1.515	
	V_{IN} = 2.9 V to 10 V, I_{OUT} = 0 to 800 mA		1.455	1.5	1.545	
	V_{IN} = 3.8 V, I_{OUT} = 10 mA, T_J = 25°C	TLV1117-18	1.782	1.8	1.818	
	V_{IN} = 3.2 V to 10 V, I_{OUT} = 0 to 800 mA		1.746	1.8	1.854	
	V_{IN} = 4.5 V, I_{OUT} = 10 mA, T_J = 25°C	TLV1117-25	2.475	2.5	2.525	
	V_{IN} = 3.9 V to 10 V, I_{OUT} = 0 to 800 mA		2.450	2.5	2.550	
	V_{IN} = 5 V, I_{OUT} = 10 mA, T_J = 25°C	TLV1117-33	3.267	3.3	3.333	
	V_{IN} = 4.75 V to 10 V, I_{OUT} = 0 to 800 mA		3.235	3.3	3.365	
	V_{IN} = 7 V, I_{OUT} = 10 mA, T_J = 25°C	TLV1117-50	4.950	5.0	5.050	
	V_{IN} = 6.5 V to 12 V, I_{OUT} = 0 to 800 mA		4.900	5.0	5.100	
Line regulation	I_{OUT} = 10 mA, $V_{IN} – V_{OUT}$ = 1.5 V to 13.75 V	TLV1117		0.035%	0.2%	—
	I_{OUT} = 0 mA, V_{IN} = 2.9 V to 10 V	TLV1117-15		1	6	mV
	I_{OUT} = 0 mA, V_{IN} = 3.2 V to 10 V	TLV1117-18		1	6	
	I_{OUT} = 0 mA, V_{IN} = 3.9 V to 10 V	TLV1117-25		1	6	
	I_{OUT} = 0 mA, V_{IN} = 4.75 V to 15 V	TLV1117-33		1	6	
	I_{OUT} = 0 mA, V_{IN} = 6.5 V to 15 V	TLV1117-50		1	10	
Load regulation	I_{OUT} = 10 mA to 800 mA, $V_{IN} – V_{OUT}$ = 3 V	TLV1117		0.2%	0.4%	—
	I_{OUT} = 0 to 800 mA, V_{IN} = 2.9 V	TLV1117-15		1	10	mV
	I_{OUT} = 0 to 800 mA, V_{IN} = 3.2 V	TLV1117-18		1	10	
	I_{OUT} = 0 to 800 mA, V_{IN} = 3.9 V	TLV1117-25		1	10	
	I_{OUT} = 0 to 800 mA, V_{IN} = 4.75 V	TLV1117-33		1	10	
	I_{OUT} = 0 to 800 mA, V_{IN} = 6.5 V	TLV1117-50		1	15	
Dropout voltage, V_{DO} (2)	I_{OUT} = 100 mA			1.1	1.2	V
	I_{OUT} = 500 mA			1.15	1.25	
	I_{OUT} = 800 mA			1.2	1.3	
Current limit	$V_{IN} – V_{OUT}$ = 5 V, T_J = 25°C (3)		0.8	1.2	1.6	A
Minimum load current	V_{IN} = 15 V	TLV1117		1.7	5	mA
Quiescent current	V_{IN} ≤ 15 V	All fixed-voltage options		5	10	mA
Thermal regulation	30-ms pulse, T_A = 25°C			0.01	0.1	%/W
Ripple rejection	$V_{IN} – V_{OUT}$ = 3 V, V_{ripple} = 1 V_{pp}, f = 120 Hz		60	75		dB
ADJ pin current				80	120	µA
Change in ADJ pin current	$V_{IN} – V_{OUT}$ = 1.4 V to 10 V, I_{OUT} = 10 mA to 800 mA			0.2	5	µA
Temperature stability	T_J = full range			0.5%		—
Long-term stability	1000 hrs, No load, T_A = 125°C			0.3%		—
Output noise voltage (% of V_{OUT})	f = 10 Hz to 100 kHz			0.003%		—

(1) All characteristics are measured with a 10-µF capacitor across the input and a 10-µF capacitor across the output. Pulse testing techniques are used to maintain the junction temperature as close to the ambient temperature as possible.
(2) Dropout is defined as the V_{IN} to V_{OUT} differential at which V_{OUT} drops 100 mV below the value of V_{OUT}, measured at $V_{IN} = V_{OUT(nom)} + 1.5$ V.
(3) Current limit test specified under recommended operating conditions.

Copyright © 2004–2014, Texas Instruments Incorporated

7.6 TLV1117I Electrical Characteristics

T_J = –40°C to 125°C, all typical values are at T_J = 25°C (unless otherwise noted)

PARAMETER	TEST CONDITIONS (1)		MIN	TYP	MAX	UNIT
Reference voltage, V_{REF}	$V_{IN} – V_{OUT}$ = 2 V, I_{OUT} = 10 mA, T_J = 25°C	TLV1117	1.238	1.25	1.262	V
	$V_{IN} – V_{OUT}$ = 1.4 V to 10 V, I_{OUT} = 10 mA to 800 mA		1.200	1.25	1.29	
Output voltage, V_{OUT}	V_{IN} = 3.5 V, I_{OUT} = 10 mA, T_J = 25°C	TLV1117-15	1.485	1.5	1.515	
	V_{IN} = 2.9 V to 10 V, I_{OUT} = 0 to 800 mA		1.44	1.5	1.56	
	V_{IN} = 3.8 V, I_{OUT} = 10 mA, T_J = 25°C	TLV1117-18	1.782	1.8	1.818	
	V_{IN} = 3.2 V to 10 V, I_{OUT} = 0 to 800 mA		1.728	1.8	1.872	
	V_{IN} = 4.5 V, I_{OUT} = 10 mA, T_J = 25°C	TLV1117-25	2.475	2.5	2.525	
	V_{IN} = 3.9 V to 10 V, I_{OUT} = 0 to 800 mA		2.4	2.5	2.6	
	V_{IN} = 5 V, I_{OUT} = 10 mA, T_J = 25°C	TLV1117-33	3.267	3.3	3.333	
	V_{IN} = 4.75 V to 10 V, I_{OUT} = 0 to 800 mA		3.168	3.3	3.432	
	V_{IN} = 7 V, I_{OUT} = 10 mA, T_J = 25°C	TLV1117-50	4.95	5.0	5.05	
	V_{IN} = 6.5 V to 12 V, I_{OUT} = 0 to 800 mA		4.80	5.0	5.20	
Line regulation	I_{OUT} = 10 mA, $V_{IN} – V_{OUT}$ = 1.5 V to 13.75 V	TLV1117		0.035%	0.3%	—
	I_{OUT} = 0 mA, V_{IN} = 2.9 V to 10 V	TLV1117-15		1	10	mV
	I_{OUT} = 0 mA, V_{IN} = 3.2 V to 10 V	TLV1117-18		1	10	
	I_{OUT} = 0 mA, V_{IN} = 3.9 V to 10 V	TLV1117-25		1	10	
	I_{OUT} = 0 mA, V_{IN} = 4.75 V to 15 V	TLV1117-33		1	10	
	I_{OUT} = 0 mA, V_{IN} = 6.5 V to 15 V	TLV1117-50		1	15	
Load regulation	I_{OUT} = 10 mA to 800 mA, $V_{IN} – V_{OUT}$ = 3 V	TLV1117		0.2%	0.5%	—
	I_{OUT} = 0 to 800 mA, V_{IN} = 2.9 V	TLV1117-15		1	15	mV
	I_{OUT} = 0 to 800 mA, V_{IN} = 3.2 V	TLV1117-18		1	15	
	I_{OUT} = 0 to 800 mA, V_{IN} = 3.9 V	TLV1117-25		1	15	
	I_{OUT} = 0 to 800 mA, V_{IN} = 4.75 V	TLV1117-33		1	15	
	I_{OUT} = 0 to 800 mA, V_{IN} = 6.5 V	TLV1117-50		1	20	
Dropout voltage, V_{DO} (2)	I_{OUT} = 100 mA			1.1	1.3	V
	I_{OUT} = 500 mA			1.15	1.35	
	I_{OUT} = 800 mA			1.2	1.4	
Current limit	$V_{IN} – V_{OUT}$ = 5 V, T_J = 25°C (3)		0.8	1.2	1.6	A
Minimum load current	V_{IN} = 15 V	TLV1117		1.7	5	mA
Quiescent current	V_{IN} ≤ 15 V	All fixed-voltage options		5	15	mA
Thermal regulation	30-ms pulse, T_A = 25°C			0.01	0.1	%/W
Ripple rejection	$V_{IN} – V_{OUT}$ = 3 V, V_{ripple} = 1 V_{pp}, f = 120 Hz		60	75		dB
ADJ pin current				80	120	µA
Change in ADJ pin current	$V_{IN} – V_{OUT}$ = 1.4 V to 10 V, I_{OUT} = 10 mA to 800 mA			0.2	10	µA
Temperature stability	T_J = full range			0.5%		—
Long-term stability	1000 hrs, No load, T_A = 125°C			0.3%		—
Output noise voltage (% of V_{OUT})	f = 10 Hz to 100 kHz			0.003%		—

(1) All characteristics are measured with a 10-µF capacitor across the input and a 10-µF capacitor across the output. Pulse testing techniques are used to maintain the junction temperature as close to the ambient temperature as possible.
(2) Dropout is defined as the V_{IN} to V_{OUT} differential at which V_{OUT} drops 100 mV below the value of V_{OUT}, measured at $V_{IN} = V_{OUT(nom)}$ + 1.5 V.
(3) Current limit test specified under recommended operating conditions

Copyright © 2004–2014, Texas Instruments Incorporated

7.7 Typical Characteristics

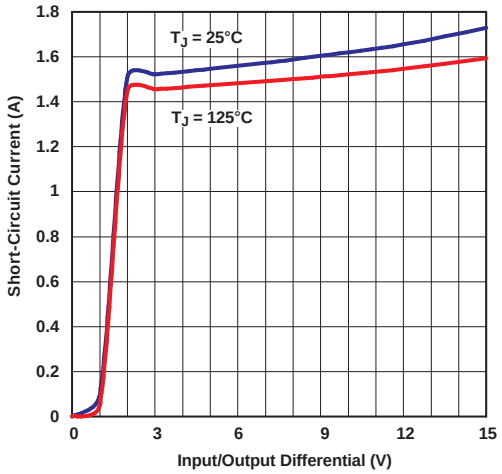

Figure 1. Short-Circuit Current vs (V_{IN} – V_{OUT})

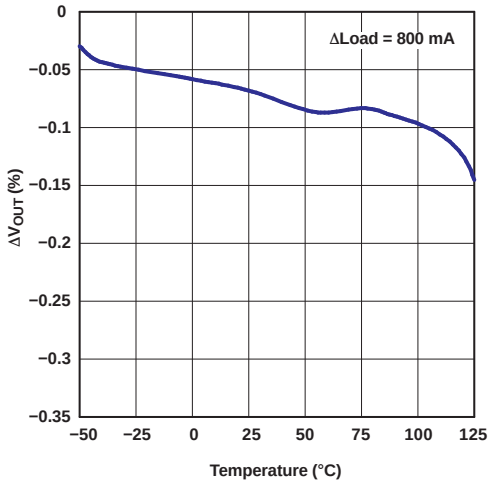

Figure 2. Load Regulation

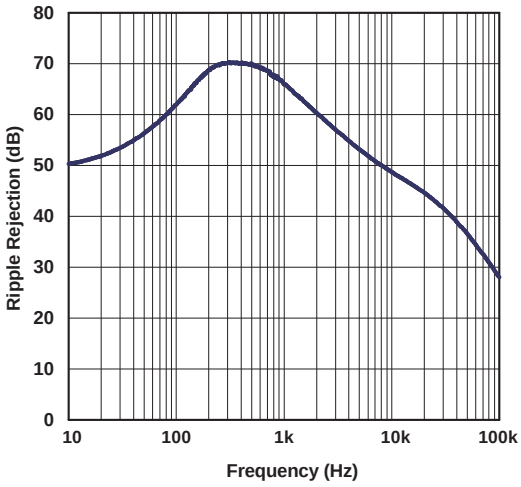

Figure 3. Ripple Rejection vs Frequency (ADJ Version)

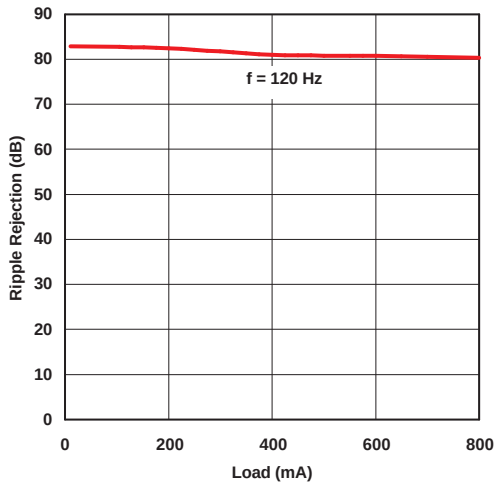

Figure 4. Ripple Rejection vs Load Current (ADJ Version)

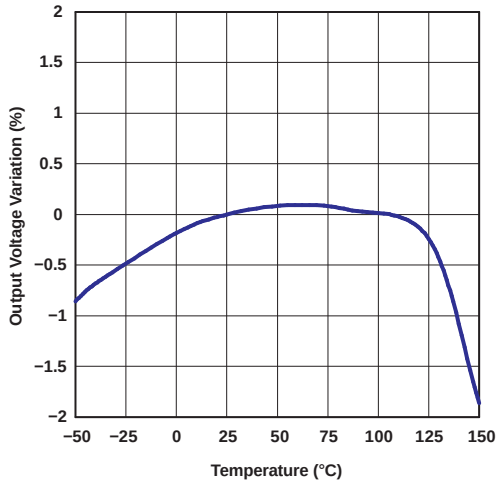

Figure 5. Temperature Stability

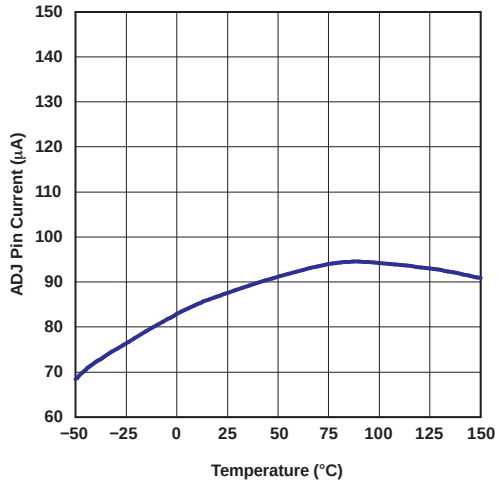

Figure 6. ADJ Pin Current vs Temperature

Copyright © 2004–2014, Texas Instruments Incorporated

Typical Characteristics (continued)

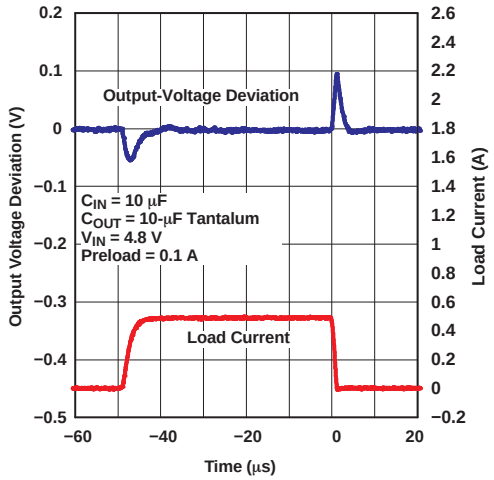

Figure 7. TLV1117-33 Load Transient Response

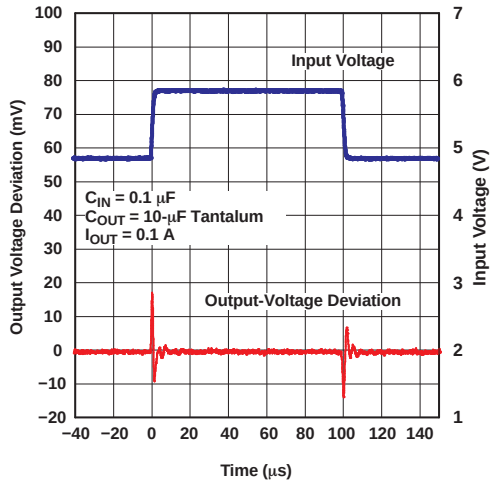

Figure 8. TLV1117-33 Line Transient Response

8 Detailed Description

8.1 Overview

The TLV1117 device is a positive low-dropout voltage regulator designed to provide up to 800 mA of output current. The device is available in 1.5-V, 1.8-V, 2.5-V, 3.3-V, 5-V, and adjustable-output voltage options. All internal circuitry is designed to operate down to 1-V input-to-output differential. Dropout voltage is specified at a maximum of 1.3 V at 800 mA, decreasing at lower load currents.

The TLV1117 device is designed to be stable with tantalum and aluminum electrolytic output capacitors having an ESR between 0.2 Ω and 10 Ω.

Unlike pnp-type regulators, in which up to 10% of the output current is wasted as quiescent current, the quiescent current of the TLV1117 device flows into the load, increasing efficiency.

The TLV1117C device is characterized for operation over the virtual junction temperature range of 0°C to 125°C, and the TLV1117I device is characterized for operation over the virtual junction temperature range of –40°C to 125°C.

8.2 Functional Block Diagram

Functional Block Diagram

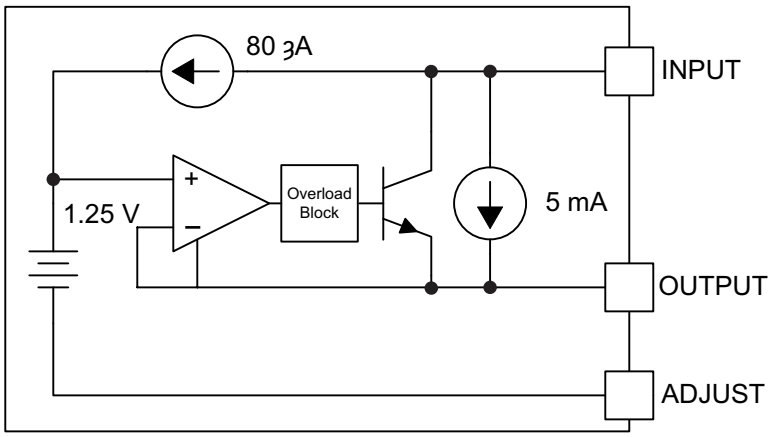

8.3 Feature Description

8.3.1 NPN Output Drive

NPN output topology provides lower output impedance than most LDOs. However, an output capacitor is required. To support maximum current and lowest temperature, 1.4-V headroom is recommended (less for lower currents) ($V_I – V_O$).

8.3.2 Overload Block

Current limiting and over temperature shutdown protects against overload or under heat sinking.

8.3.3 Programmable Feedback

Op amp with 1.25-V offset input at the ADJUST pin provides easy output voltage programming. For current regulation applications, a single resistor whose resistance value is 1.25 V / IOUT and power rating is greater than $(1.25\ V)^2$ / R should be used. For voltage regulation applications, two resistors set the output voltage.

8.4 Device Functional Modes

8.4.1 Normal operation

The device OUTPUT pin will source current necessary to make OUTPUT pin 1.25 V greater than ADJUST terminal to provide output regulation.

Copyright © 2004–2014, Texas Instruments Incorporated

Device Functional Modes (continued)

8.4.2 Operation With Low Input Voltage

The adjustable version of the device requires 1-V headroom (V_I – V_O) to operate in regulation. With less headroom, the device may drop out and OUTPUT voltage will be INPUT voltage minus drop out voltage.

8.4.3 Operation at Light Loads

The device passes its bias current to the OUTPUT pin. The load or feedback must consume this minimum current for regulation or the output may be too high.

8.4.4 Operation in Self Protection

When an overload occurs the device will shut down the output stage or reduce the output current to prevent device damage. The device will automatically reset from the overload. The output may be reduced or alternate between on and off until the overload is removed.

Copyright © 2004–2014, Texas Instruments Incorporated

9 Application and Implementation

NOTE

Information in the following applications sections is not part of the TI component specification, and TI does not warrant its accuracy or completeness. TI's customers are responsible for determining suitability of components for their purposes. Customers should validate and test their design implementation to confirm system functionality.

9.1 Typical Application

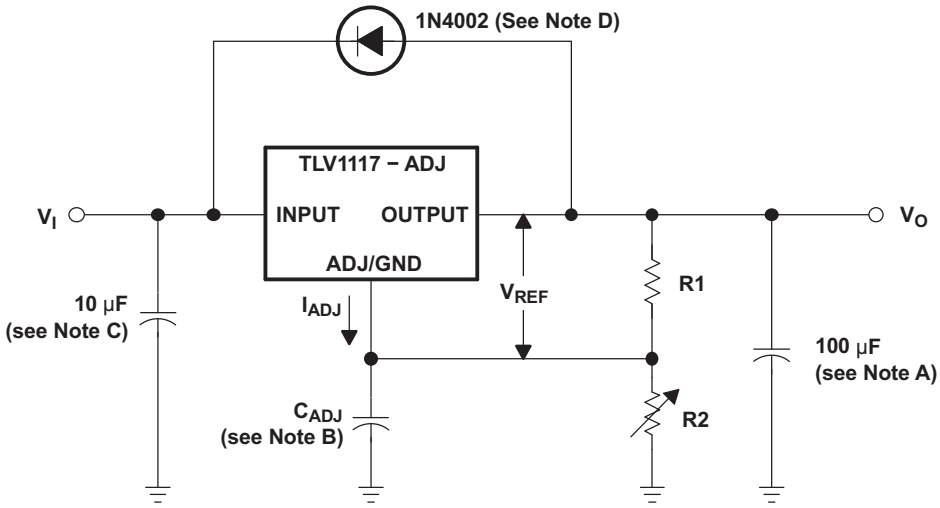

Figure 9. Basic Adjustable Regulator

The adjustable version of the TLV1117 will take a 2.7 to 15-V input. The voltage V_{REF} refers to the voltage between the output and the ADJUST pin, typically 1.25 V. The V_{REF} voltage causes a current to flow across R1, which is the same current that will flow across R2 (minus the negligible 50-µA I_{ADJ}). Therefore, R2 can be adjusted to create a larger voltage drop from GND and set the output voltage. The output voltage equation is described in *Detailed Design Procedure*.

9.1.1 Design Requirements

- (A) Output capacitor selection is critical for regulator stability. Larger C_{OUT} values benefit the regulator by improving transient response and loop stability. This device is designed to be stable with tantalum and aluminum electrolytic output capacitors having an ESR between 0.2 Ω and 10 Ω.
- (B) C_{ADJ} can be used to improve ripple rejection. If C_{ADJ} is used, a C_{OUT} that is larger in value than C_{ADJ} must be used.
- (C) C_{IN} is recommended if TLV1117 device is not located near the power-supply filter.
- (D) An external diode is recommended to protect the regulator if the input instantaneously is shorted to GND.

9.1.2 Detailed Design Procedure

The output voltage can be calculated as shown in Figure 10:

$$V_{OUT} = V_{REF}\left(1 + \frac{R2}{R1}\right) + \left(I_{ADJ} \times R2\right)$$

Figure 10.

I_{ADJ} can be neglected in most applications because its value is approximately 80 µA.

Copyright © 2004–2014, Texas Instruments Incorporated

Typical Application (continued)

9.1.3 Application Curves

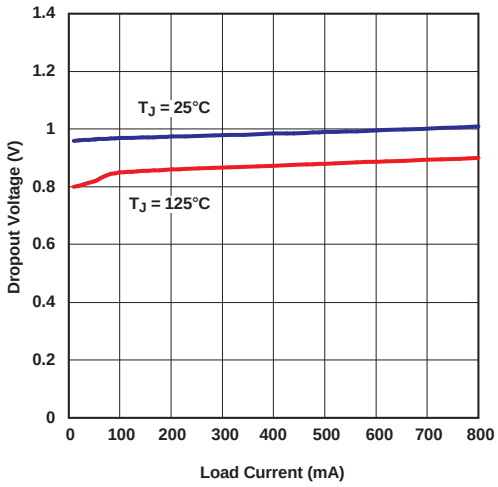

Figure 11. Dropout Voltage vs Load Current

10 Power Supply Recommendations

The fixed and adjustable versions of the TLV1117 have different recommended ranges of operating voltage. Refer to *Recommended Operating Conditions* for specific operating ranges.

11 Layout

11.1 Layout Guidelines

One or two input capacitors are recommended if the TLV1117 is not located near its power supply output filter capacitor. These capacitors can filter high-frequency noise and mitigate brief voltage surges from the input. Traces on the input and output pins of the device should be wide enough to support the full range of current needed in the application to minimize I×R drop.

11.2 Layout Example

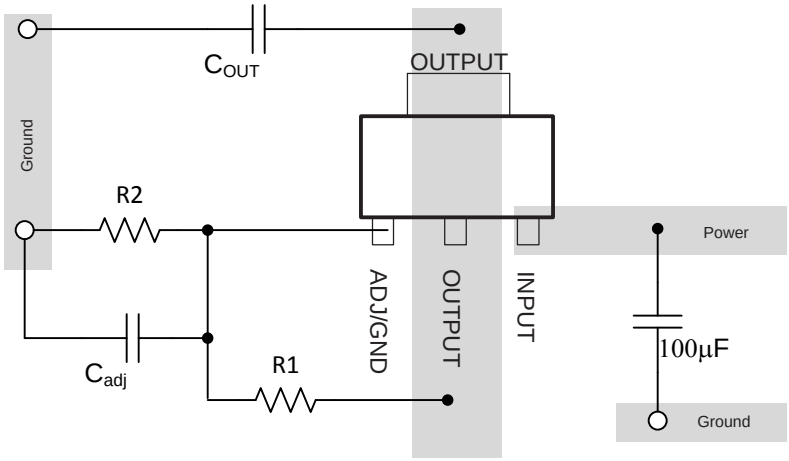

Figure 12. Layout Example

12 Device and Documentation Support

12.1 Trademarks

All trademarks are the property of their respective owners.

12.2 Electrostatic Discharge Caution

These devices have limited built-in ESD protection. The leads should be shorted together or the device placed in conductive foam during storage or handling to prevent electrostatic damage to the MOS gates.

12.3 Glossary

SLYZ022 — *TI Glossary.*

This glossary lists and explains terms, acronyms and definitions.

13 Mechanical, Packaging, and Orderable Information

The following pages include mechanical packaging and orderable information. This information is the most current data available for the designated devices. This data is subject to change without notice and revision of this document. For browser based versions of this data sheet, refer to the left hand navigation.

Copyright © 2004–2014, Texas Instruments Incorporated

PACKAGING INFORMATION

Orderable Device	Status (1)	Package Type	Package Drawing	Pins	Package Qty	Eco Plan (2)	Lead finish/ Ball material (6)	MSL Peak Temp (3)	Op Temp (°C)	Device Marking (4/5)	Samples
TLV1117-15CDCY	ACTIVE	SOT-223	DCY	4	80	RoHS & Green	SN	Level-2-260C-1 YEAR	0 to 125	T2	Samples
TLV1117-15CDCYR	ACTIVE	SOT-223	DCY	4	2500	RoHS & Green	SN	Level-2-260C-1 YEAR	0 to 125	T2	Samples
TLV1117-15CDCYRG3	ACTIVE	SOT-223	DCY	4	2500	RoHS & Green	SN	Level-2-260C-1 YEAR	0 to 125	T2	Samples
TLV1117-15CDRJR	ACTIVE	SON	DRJ	8	3000	RoHS & Green	NIPDAU	Level-2-260C-1 YEAR	0 to 125	ZYH	Samples
TLV1117-15IDCY	ACTIVE	SOT-223	DCY	4	80	RoHS & Green	SN	Level-2-260C-1 YEAR	-40 to 125	T3	Samples
TLV1117-15IDCYR	ACTIVE	SOT-223	DCY	4	2500	RoHS & Green	SN	Level-2-260C-1 YEAR	-40 to 125	T3	Samples
TLV1117-15IKVURG3	ACTIVE	TO-252	KVU	3	2500	RoHS & Green	SN	Level-3-260C-168 HR	-40 to 125	ZF15	Samples
TLV1117-18CDCY	ACTIVE	SOT-223	DCY	4	80	RoHS & Green	SN	Level-2-260C-1 YEAR	0 to 125	T4	Samples
TLV1117-18CDCYR	ACTIVE	SOT-223	DCY	4	2500	RoHS & Green	SN	Level-2-260C-1 YEAR	0 to 125	T4	Samples
TLV1117-18CDCYRG3	ACTIVE	SOT-223	DCY	4	2500	RoHS & Green	SN	Level-2-260C-1 YEAR	0 to 125	T4	Samples
TLV1117-18CDRJR	ACTIVE	SON	DRJ	8	3000	RoHS & Green	NIPDAU	Level-2-260C-1 YEAR	0 to 125	ZYK	Samples
TLV1117-18CKVURG3	ACTIVE	TO-252	KVU	3	2500	RoHS & Green	SN	Level-3-260C-168 HR	0 to 125	ZE18	Samples
TLV1117-18IDCY	ACTIVE	SOT-223	DCY	4	80	RoHS & Green	SN	Level-2-260C-1 YEAR	-40 to 125	T5	Samples
TLV1117-18IDCYR	ACTIVE	SOT-223	DCY	4	2500	RoHS & Green	SN	Level-2-260C-1 YEAR	-40 to 125	T5	Samples
TLV1117-18IDCYRG3	ACTIVE	SOT-223	DCY	4	2500	RoHS & Green	SN	Level-2-260C-1 YEAR	-40 to 125	T5	Samples
TLV1117-18IDRJR	ACTIVE	SON	DRJ	8	1000	RoHS & Green	NIPDAU	Level-2-260C-1 YEAR	-40 to 125	ZYL	Samples
TLV1117-18IKVURG3	ACTIVE	TO-252	KVU	3	2500	RoHS & Green	SN	Level-3-260C-168 HR	-40 to 125	ZF18	Samples
TLV1117-25CDCY	ACTIVE	SOT-223	DCY	4	80	RoHS & Green	SN	Level-2-260C-1 YEAR	0 to 125	T6	Samples
TLV1117-25CDCYR	ACTIVE	SOT-223	DCY	4	2500	RoHS & Green	SN	Level-2-260C-1 YEAR	0 to 125	T6	Samples
TLV1117-25CDCYRG3	ACTIVE	SOT-223	DCY	4	2500	RoHS & Green	SN	Level-2-260C-1 YEAR	0 to 125	T6	Samples

Orderable Device	Status (1)	Package Type	Package Drawing	Pins	Package Qty	Eco Plan (2)	Lead finish/ Ball material (6)	MSL Peak Temp (3)	Op Temp (°C)	Device Marking (4/5)	Samples
TLV1117-25CKVURG3	ACTIVE	TO-252	KVU	3	2500	RoHS & Green	SN	Level-3-260C-168 HR	0 to 125	ZE25	Samples
TLV1117-25IDCY	ACTIVE	SOT-223	DCY	4	80	RoHS & Green	SN	Level-2-260C-1 YEAR	-40 to 125	T8	Samples
TLV1117-25IDCYR	ACTIVE	SOT-223	DCY	4	2500	RoHS & Green	SN	Level-2-260C-1 YEAR	-40 to 125	T8	Samples
TLV1117-25IDRJR	ACTIVE	SON	DRJ	8	3000	RoHS & Green	NIPDAU	Level-2-260C-1 YEAR	-40 to 125	ZYN	Samples
TLV1117-33CDCY	ACTIVE	SOT-223	DCY	4	80	RoHS & Green	SN	Level-2-260C-1 YEAR	0 to 125	V3	Samples
TLV1117-33CDCYG3	ACTIVE	SOT-223	DCY	4	80	RoHS & Green	SN	Level-2-260C-1 YEAR	0 to 125	V3	Samples
TLV1117-33CDCYR	ACTIVE	SOT-223	DCY	4	2500	RoHS & Green	SN	Level-2-260C-1 YEAR	0 to 125	V3	Samples
TLV1117-33CDCYRG3	ACTIVE	SOT-223	DCY	4	2500	RoHS & Green	SN	Level-2-260C-1 YEAR	0 to 125	V3	Samples
TLV1117-33CDRJR	ACTIVE	SON	DRJ	8	1000	RoHS & Green	NIPDAU	Level-2-260C-1 YEAR	0 to 125	ZYP	Samples
TLV1117-33CKVURG3	ACTIVE	TO-252	KVU	3	2500	RoHS & Green	SN	Level-3-260C-168 HR	0 to 125	ZE33	Samples
TLV1117-33IDCY	ACTIVE	SOT-223	DCY	4	80	RoHS & Green	SN	Level-2-260C-1 YEAR	-40 to 125	(V3, VS)	Samples
TLV1117-33IDCYG3	ACTIVE	SOT-223	DCY	4	80	RoHS & Green	SN	Level-2-260C-1 YEAR	-40 to 125	(V3, VS)	Samples
TLV1117-33IDCYR	ACTIVE	SOT-223	DCY	4	2500	RoHS & Green	SN	Level-2-260C-1 YEAR	-40 to 125	VS	Samples
TLV1117-33IDCYRG3	ACTIVE	SOT-223	DCY	4	2500	RoHS & Green	SN	Level-2-260C-1 YEAR	-40 to 125	VS	Samples
TLV1117-33IDRJR	ACTIVE	SON	DRJ	8	1000	RoHS & Green	NIPDAU	Level-2-260C-1 YEAR	-40 to 125	ZYR	Samples
TLV1117-33IKVURG3	ACTIVE	TO-252	KVU	3	2500	RoHS & Green	SN	Level-3-260C-168 HR	-40 to 125	ZF33	Samples
TLV1117-50CDCY	ACTIVE	SOT-223	DCY	4	80	RoHS & Green	SN	Level-2-260C-1 YEAR	0 to 125	VT	Samples
TLV1117-50CDCYG3	ACTIVE	SOT-223	DCY	4	80	RoHS & Green	SN	Level-2-260C-1 YEAR	0 to 125	VT	Samples
TLV1117-50CDCYR	ACTIVE	SOT-223	DCY	4	2500	RoHS & Green	SN	Level-2-260C-1 YEAR	0 to 125	VT	Samples
TLV1117-50CDCYRG3	ACTIVE	SOT-223	DCY	4	2500	RoHS & Green	SN	Level-2-260C-1 YEAR	0 to 125	VT	Samples
TLV1117-50CDRJR	ACTIVE	SON	DRJ	8	3000	RoHS & Green	NIPDAU	Level-2-260C-1 YEAR	0 to 125	ZE50	Samples

Orderable Device	Status (1)	Package Type	Package Drawing	Pins	Package Qty	Eco Plan (2)	Lead finish/ Ball material (6)	MSL Peak Temp (3)	Op Temp (°C)	Device Marking (4/5)	Samples
TLV1117-50CKVURG3	ACTIVE	TO-252	KVU	3	2500	RoHS & Green	SN	Level-3-260C-168 HR	0 to 125	ZE50	Samples
TLV1117-50IDCY	ACTIVE	SOT-223	DCY	4	80	RoHS & Green	SN	Level-2-260C-1 YEAR	-40 to 125	VU	Samples
TLV1117-50IDCYR	ACTIVE	SOT-223	DCY	4	2500	RoHS & Green	SN	Level-2-260C-1 YEAR	-40 to 125	VU	Samples
TLV1117-50IDCYRG3	ACTIVE	SOT-223	DCY	4	2500	RoHS & Green	SN	Level-2-260C-1 YEAR	-40 to 125	VU	Samples
TLV1117-50IDRJR	ACTIVE	SON	DRJ	8	1000	RoHS & Green	NIPDAU	Level-2-260C-1 YEAR	-40 to 125	ZF50	Samples
TLV1117-50IDRJRG4	ACTIVE	SON	DRJ	8	1000	RoHS & Green	NIPDAU	Level-2-260C-1 YEAR	-40 to 125	ZF50	Samples
TLV1117-50IKVURG3	ACTIVE	TO-252	KVU	3	2500	RoHS & Green	SN	Level-3-260C-168 HR	-40 to 125	ZF50	Samples
TLV1117CDCY	ACTIVE	SOT-223	DCY	4	80	RoHS & Green	SN	Level-2-260C-1 YEAR	0 to 125	V4	Samples
TLV1117CDCYG3	ACTIVE	SOT-223	DCY	4	80	RoHS & Green	SN	Level-2-260C-1 YEAR	0 to 125	V4	Samples
TLV1117CDCYR	ACTIVE	SOT-223	DCY	4	2500	RoHS & Green	SN	Level-2-260C-1 YEAR	0 to 125	V4	Samples
TLV1117CDCYRG3	ACTIVE	SOT-223	DCY	4	2500	RoHS & Green	SN	Level-2-260C-1 YEAR	0 to 125	V4	Samples
TLV1117CDRJR	ACTIVE	SON	DRJ	8	1000	RoHS & Green	NIPDAU	Level-2-260C-1 YEAR	0 to 125	ZYS	Samples
TLV1117CKCS	ACTIVE	TO-220	KCS	3	50	RoHS & Green	SN	N / A for Pkg Type	0 to 125	TLV1117C	Samples
TLV1117CKCT	ACTIVE	TO-220	KCT	3	50	RoHS & Non-Green	SN	N / A for Pkg Type	0 to 125	TLV1117C	Samples
TLV1117CKTTR	ACTIVE	DDPAK/ TO-263	KTT	3	500	RoHS & Green	SN	Level-3-245C-168 HR	0 to 125	TLV1117C	Samples
TLV1117CKTTRG3	ACTIVE	DDPAK/ TO-263	KTT	3	500	RoHS & Green	SN	Level-3-245C-168 HR	0 to 125	TLV1117C	Samples
TLV1117CKVURG3	ACTIVE	TO-252	KVU	3	2500	RoHS & Green	SN	Level-3-260C-168 HR	0 to 125	TV1117	Samples
TLV1117IDCY	ACTIVE	SOT-223	DCY	4	80	RoHS & Green	SN	Level-2-260C-1 YEAR	-40 to 125	V2	Samples
TLV1117IDCYG3	ACTIVE	SOT-223	DCY	4	80	RoHS & Green	SN	Level-2-260C-1 YEAR	-40 to 125	V2	Samples
TLV1117IDCYR	ACTIVE	SOT-223	DCY	4	2500	RoHS & Green	SN	Level-2-260C-1 YEAR	-40 to 125	V2	Samples

Orderable Device	Status (1)	Package Type	Package Drawing	Pins	Package Qty	Eco Plan (2)	Lead finish/ Ball material (6)	MSL Peak Temp (3)	Op Temp (°C)	Device Marking (4/5)	Samples
TLV1117IDCYRG3	ACTIVE	SOT-223	DCY	4	2500	RoHS & Green	SN	Level-2-260C-1 YEAR	-40 to 125	V2	Samples
TLV1117IDRJR	ACTIVE	SON	DRJ	8	1000	RoHS & Green	NIPDAU	Level-2-260C-1 YEAR	-40 to 125	ZYT	Samples
TLV1117IKCS	ACTIVE	TO-220	KCS	3	50	RoHS & Green	SN	N / A for Pkg Type	-40 to 125	TLV1117I	Samples
TLV1117IKCSE3	ACTIVE	TO-220	KCS	3	50	RoHS & Green	SN	N / A for Pkg Type	-40 to 125	TLV1117I	Samples
TLV1117IKTTR	ACTIVE	DDPAK/ TO-263	KTT	3	500	RoHS & Green	SN	Level-3-245C-168 HR	-40 to 125	TLV1117I	Samples
TLV1117IKVURG3	ACTIVE	TO-252	KVU	3	2500	RoHS & Green	SN	Level-3-260C-168 HR	-40 to 125	TY1117	Samples

(1) The marketing status values are defined as follows:
ACTIVE: Product device recommended for new designs.
LIFEBUY: TI has announced that the device will be discontinued, and a lifetime-buy period is in effect.
NRND: Not recommended for new designs. Device is in production to support existing customers, but TI does not recommend using this part in a new design.
PREVIEW: Device has been announced but is not in production. Samples may or may not be available.
OBSOLETE: TI has discontinued the production of the device.

(2) **RoHS:** TI defines "RoHS" to mean semiconductor products that are compliant with the current EU RoHS requirements for all 10 RoHS substances, including the requirement that RoHS substance do not exceed 0.1% by weight in homogeneous materials. Where designed to be soldered at high temperatures, "RoHS" products are suitable for use in specified lead-free processes. TI may reference these types of products as "Pb-Free".
RoHS Exempt: TI defines "RoHS Exempt" to mean products that contain lead but are compliant with EU RoHS pursuant to a specific EU RoHS exemption.
Green: TI defines "Green" to mean the content of Chlorine (Cl) and Bromine (Br) based flame retardants meet JS709B low halogen requirements of <=1000ppm threshold. Antimony trioxide based flame retardants must also meet the <=1000ppm threshold requirement.

(3) MSL, Peak Temp. - The Moisture Sensitivity Level rating according to the JEDEC industry standard classifications, and peak solder temperature.

(4) There may be additional marking, which relates to the logo, the lot trace code information, or the environmental category on the device.

(5) Multiple Device Markings will be inside parentheses. Only one Device Marking contained in parentheses and separated by a "~" will appear on a device. If a line is indented then it is a continuation of the previous line and the two combined represent the entire Device Marking for that device.

(6) Lead finish/Ball material - Orderable Devices may have multiple material finish options. Finish options are separated by a vertical ruled line. Lead finish/Ball material values may wrap to two lines if the finish value exceeds the maximum column width.

Important Information and Disclaimer: The information provided on this page represents TI's knowledge and belief as of the date that it is provided. TI bases its knowledge and belief on information provided by third parties, and makes no representation or warranty as to the accuracy of such information. Efforts are underway to better integrate information from third parties. TI has taken and continues to take reasonable steps to provide representative and accurate information but may not have conducted destructive testing or chemical analysis on incoming materials and chemicals. TI and TI suppliers consider certain information to be proprietary, and thus CAS numbers and other limited information may not be available for release.

In no event shall TI's liability arising out of such information exceed the total purchase price of the TI part(s) at issue in this document sold by TI to Customer on an annual basis.

TAPE AND REEL INFORMATION

REEL DIMENSIONS

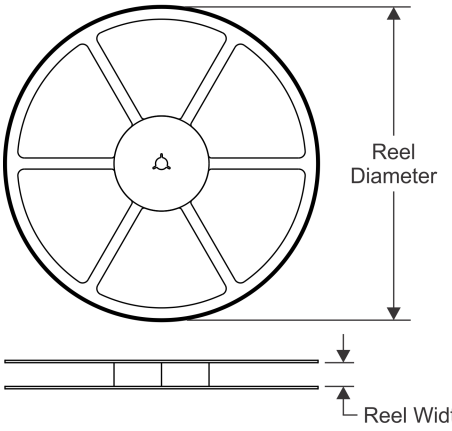

TAPE DIMENSIONS

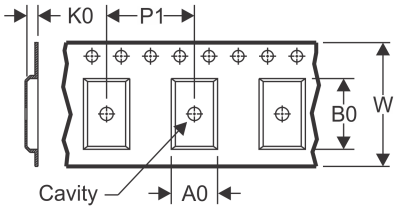

A0	Dimension designed to accommodate the component width
B0	Dimension designed to accommodate the component length
K0	Dimension designed to accommodate the component thickness
W	Overall width of the carrier tape
P1	Pitch between successive cavity centers

QUADRANT ASSIGNMENTS FOR PIN 1 ORIENTATION IN TAPE

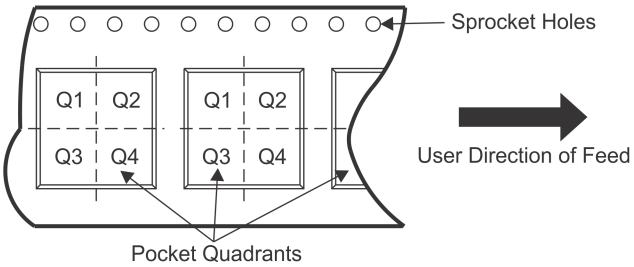

*All dimensions are nominal

Device	Package Type	Package Drawing	Pins	SPQ	Reel Diameter (mm)	Reel Width W1 (mm)	A0 (mm)	B0 (mm)	K0 (mm)	P1 (mm)	W (mm)	Pin1 Quadrant
TLV1117-15CDCYR	SOT-223	DCY	4	2500	330.0	12.4	7.0	7.42	2.0	8.0	12.0	Q3
TLV1117-15CDCYR	SOT-223	DCY	4	2500	330.0	12.4	7.05	7.4	1.9	8.0	12.0	Q3
TLV1117-15CDRJR	SON	DRJ	8	3000	330.0	12.4	4.25	4.25	1.15	8.0	12.0	Q2
TLV1117-15IDCYR	SOT-223	DCY	4	2500	330.0	12.4	7.0	7.42	2.0	8.0	12.0	Q3
TLV1117-15IDCYR	SOT-223	DCY	4	2500	330.0	12.4	7.05	7.4	1.9	8.0	12.0	Q3
TLV1117-15IKVURG3	TO-252	KVU	3	2500	330.0	16.4	6.9	10.5	2.7	8.0	16.0	Q2
TLV1117-15IKVURG3	TO-252	KVU	3	2500	330.0	16.4	6.9	10.5	2.8	8.0	16.0	Q2
TLV1117-18CDCYR	SOT-223	DCY	4	2500	330.0	12.4	6.55	7.25	1.9	8.0	12.0	Q3
TLV1117-18CDCYR	SOT-223	DCY	4	2500	330.0	12.4	7.0	7.42	2.0	8.0	12.0	Q3
TLV1117-18CDRJR	SON	DRJ	8	3000	330.0	12.4	4.25	4.25	1.15	8.0	12.0	Q2
TLV1117-18CKVURG3	TO-252	KVU	3	2500	330.0	16.4	6.9	10.5	2.7	8.0	16.0	Q2
TLV1117-18CKVURG3	TO-252	KVU	3	2500	330.0	16.4	6.9	10.5	2.8	8.0	16.0	Q2
TLV1117-18IDCYR	SOT-223	DCY	4	2500	330.0	12.4	7.0	7.42	2.0	8.0	12.0	Q3
TLV1117-18IDCYR	SOT-223	DCY	4	2500	330.0	12.4	6.55	7.25	1.9	8.0	12.0	Q3
TLV1117-18IDRJR	SON	DRJ	8	1000	180.0	12.4	4.25	4.25	1.15	8.0	12.0	Q2
TLV1117-18IKVURG3	TO-252	KVU	3	2500	330.0	16.4	6.9	10.5	2.7	8.0	16.0	Q2
TLV1117-18IKVURG3	TO-252	KVU	3	2500	330.0	16.4	6.9	10.5	2.8	8.0	16.0	Q2
TLV1117-25CDCYR	SOT-223	DCY	4	2500	330.0	12.4	7.05	7.4	1.9	8.0	12.0	Q3

Device	Package Type	Package Drawing	Pins	SPQ	Reel Diameter (mm)	Reel Width W1 (mm)	A0 (mm)	B0 (mm)	K0 (mm)	P1 (mm)	W (mm)	Pin1 Quadrant
TLV1117-25CDCYR	SOT-223	DCY	4	2500	330.0	12.4	7.0	7.42	2.0	8.0	12.0	Q3
TLV1117-25CKVURG3	TO-252	KVU	3	2500	330.0	16.4	6.9	10.5	2.8	8.0	16.0	Q2
TLV1117-25CKVURG3	TO-252	KVU	3	2500	330.0	16.4	6.9	10.5	2.7	8.0	16.0	Q2
TLV1117-25IDCYR	SOT-223	DCY	4	2500	330.0	12.4	7.0	7.42	2.0	8.0	12.0	Q3
TLV1117-25IDCYR	SOT-223	DCY	4	2500	330.0	12.4	7.05	7.4	1.9	8.0	12.0	Q3
TLV1117-25IDRJR	SON	DRJ	8	3000	330.0	12.4	4.25	4.25	1.15	8.0	12.0	Q2
TLV1117-33CDCYR	SOT-223	DCY	4	2500	330.0	12.4	7.05	7.4	1.9	8.0	12.0	Q3
TLV1117-33CDCYR	SOT-223	DCY	4	2500	330.0	12.4	7.0	7.42	2.0	8.0	12.0	Q3
TLV1117-33CDRJR	SON	DRJ	8	1000	180.0	12.4	4.25	4.25	1.15	8.0	12.0	Q2
TLV1117-33CKVURG3	TO-252	KVU	3	2500	330.0	16.4	6.9	10.5	2.7	8.0	16.0	Q2
TLV1117-33CKVURG3	TO-252	KVU	3	2500	330.0	16.4	6.9	10.5	2.8	8.0	16.0	Q2
TLV1117-33IDCYR	SOT-223	DCY	4	2500	330.0	12.4	7.0	7.42	2.0	8.0	12.0	Q3
TLV1117-33IDCYR	SOT-223	DCY	4	2500	330.0	12.4	7.05	7.4	1.9	8.0	12.0	Q3
TLV1117-33IDCYR	SOT-223	DCY	4	2500	330.0	12.4	6.55	7.25	1.9	8.0	12.0	Q3
TLV1117-33IDRJR	SON	DRJ	8	1000	180.0	12.4	4.25	4.25	1.15	8.0	12.0	Q2
TLV1117-33IKVURG3	TO-252	KVU	3	2500	330.0	16.4	6.9	10.5	2.8	8.0	16.0	Q2
TLV1117-33IKVURG3	TO-252	KVU	3	2500	330.0	16.4	6.9	10.5	2.7	8.0	16.0	Q2
TLV1117-50CDCYR	SOT-223	DCY	4	2500	330.0	12.4	7.05	7.4	1.9	8.0	12.0	Q3
TLV1117-50CDCYR	SOT-223	DCY	4	2500	330.0	12.4	7.0	7.42	2.0	8.0	12.0	Q3
TLV1117-50CDRJR	SON	DRJ	8	3000	330.0	12.4	4.25	4.25	1.15	8.0	12.0	Q2
TLV1117-50CKVURG3	TO-252	KVU	3	2500	330.0	16.4	6.9	10.5	2.8	8.0	16.0	Q2
TLV1117-50CKVURG3	TO-252	KVU	3	2500	330.0	16.4	6.9	10.5	2.7	8.0	16.0	Q2
TLV1117-50IDCYR	SOT-223	DCY	4	2500	330.0	12.4	7.05	7.4	1.9	8.0	12.0	Q3
TLV1117-50IDCYR	SOT-223	DCY	4	2500	330.0	12.4	7.0	7.42	2.0	8.0	12.0	Q3
TLV1117-50IDCYR	SOT-223	DCY	4	2500	330.0	12.4	6.55	7.25	1.9	8.0	12.0	Q3
TLV1117-50IDRJR	SON	DRJ	8	1000	180.0	12.4	4.25	4.25	1.15	8.0	12.0	Q2
TLV1117-50IKVURG3	TO-252	KVU	3	2500	330.0	16.4	6.9	10.5	2.8	8.0	16.0	Q2
TLV1117-50IKVURG3	TO-252	KVU	3	2500	330.0	16.4	6.9	10.5	2.7	8.0	16.0	Q2
TLV1117CDCYR	SOT-223	DCY	4	2500	330.0	12.4	7.05	7.4	1.9	8.0	12.0	Q3
TLV1117CDCYR	SOT-223	DCY	4	2500	330.0	12.4	6.55	7.25	1.9	8.0	12.0	Q3
TLV1117CDCYR	SOT-223	DCY	4	2500	330.0	12.4	7.0	7.42	2.0	8.0	12.0	Q3
TLV1117CDRJR	SON	DRJ	8	1000	180.0	12.4	4.25	4.25	1.15	8.0	12.0	Q2
TLV1117CKTTR	DDPAK/ TO-263	KTT	3	500	330.0	24.4	10.8	16.1	4.9	16.0	24.0	Q2
TLV1117CKTTR	DDPAK/ TO-263	KTT	3	500	330.0	24.4	10.8	16.3	5.11	16.0	24.0	Q2
TLV1117CKVURG3	TO-252	KVU	3	2500	330.0	16.4	6.9	10.5	2.7	8.0	16.0	Q2
TLV1117CKVURG3	TO-252	KVU	3	2500	330.0	16.4	6.9	10.5	2.8	8.0	16.0	Q2
TLV1117IDCYR	SOT-223	DCY	4	2500	330.0	12.4	6.55	7.25	1.9	8.0	12.0	Q3
TLV1117IDCYR	SOT-223	DCY	4	2500	330.0	12.4	7.05	7.4	1.9	8.0	12.0	Q3
TLV1117IDCYR	SOT-223	DCY	4	2500	330.0	12.4	7.0	7.42	2.0	8.0	12.0	Q3
TLV1117IDRJR	SON	DRJ	8	1000	180.0	12.4	4.25	4.25	1.15	8.0	12.0	Q2
TLV1117IKTTR	DDPAK/ TO-263	KTT	3	500	330.0	24.4	10.8	16.3	5.11	16.0	24.0	Q2

Device	Package Type	Package Drawing	Pins	SPQ	Reel Diameter (mm)	Reel Width W1 (mm)	A0 (mm)	B0 (mm)	K0 (mm)	P1 (mm)	W (mm)	Pin1 Quadrant
TLV1117IKTTR	DDPAK/ TO-263	KTT	3	500	330.0	24.4	10.8	16.1	4.9	16.0	24.0	Q2
TLV1117IKVURG3	TO-252	KVU	3	2500	330.0	16.4	6.9	10.5	2.7	8.0	16.0	Q2
TLV1117IKVURG3	TO-252	KVU	3	2500	330.0	16.4	6.9	10.5	2.8	8.0	16.0	Q2

TAPE AND REEL BOX DIMENSIONS

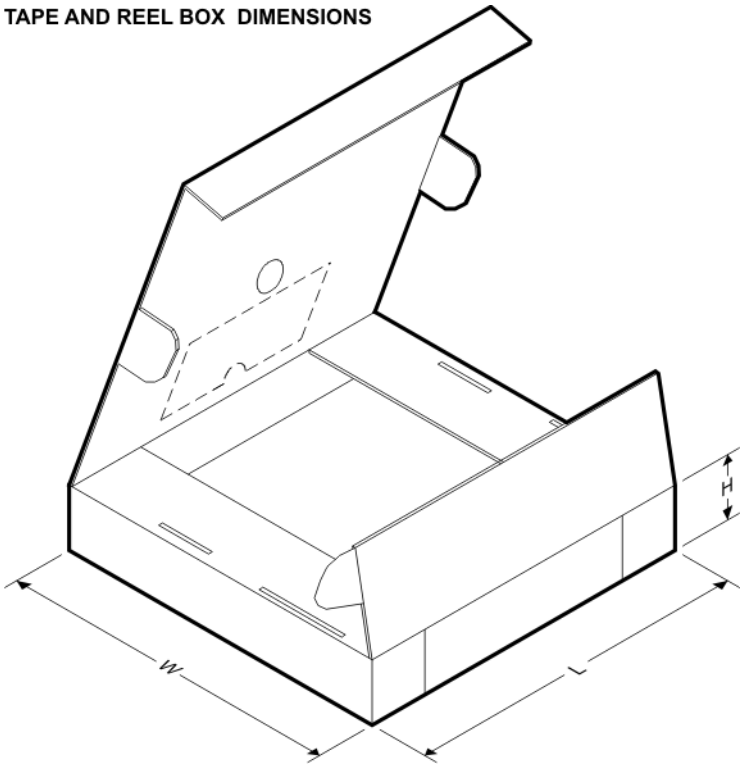

*All dimensions are nominal

Device	Package Type	Package Drawing	Pins	SPQ	Length (mm)	Width (mm)	Height (mm)
TLV1117-15CDCYR	SOT-223	DCY	4	2500	350.0	334.0	47.0
TLV1117-15CDCYR	SOT-223	DCY	4	2500	340.0	340.0	38.0
TLV1117-15CDRJR	SON	DRJ	8	3000	367.0	367.0	35.0
TLV1117-15IDCYR	SOT-223	DCY	4	2500	350.0	334.0	47.0
TLV1117-15IDCYR	SOT-223	DCY	4	2500	340.0	340.0	38.0
TLV1117-15IKVURG3	TO-252	KVU	3	2500	340.0	340.0	38.0
TLV1117-15IKVURG3	TO-252	KVU	3	2500	350.0	334.0	47.0
TLV1117-18CDCYR	SOT-223	DCY	4	2500	336.0	336.0	48.0
TLV1117-18CDCYR	SOT-223	DCY	4	2500	350.0	334.0	47.0
TLV1117-18CDRJR	SON	DRJ	8	3000	367.0	367.0	35.0
TLV1117-18CKVURG3	TO-252	KVU	3	2500	340.0	340.0	38.0
TLV1117-18CKVURG3	TO-252	KVU	3	2500	350.0	334.0	47.0
TLV1117-18IDCYR	SOT-223	DCY	4	2500	350.0	334.0	47.0

Device	Package Type	Package Drawing	Pins	SPQ	Length (mm)	Width (mm)	Height (mm)
TLV1117-18IDCYR	SOT-223	DCY	4	2500	336.0	336.0	48.0
TLV1117-18IDRJR	SON	DRJ	8	1000	210.0	185.0	35.0
TLV1117-18IKVURG3	TO-252	KVU	3	2500	340.0	340.0	38.0
TLV1117-18IKVURG3	TO-252	KVU	3	2500	350.0	334.0	47.0
TLV1117-25CDCYR	SOT-223	DCY	4	2500	340.0	340.0	38.0
TLV1117-25CDCYR	SOT-223	DCY	4	2500	350.0	334.0	47.0
TLV1117-25CKVURG3	TO-252	KVU	3	2500	350.0	334.0	47.0
TLV1117-25CKVURG3	TO-252	KVU	3	2500	340.0	340.0	38.0
TLV1117-25IDCYR	SOT-223	DCY	4	2500	350.0	334.0	47.0
TLV1117-25IDCYR	SOT-223	DCY	4	2500	340.0	340.0	38.0
TLV1117-25IDRJR	SON	DRJ	8	3000	367.0	367.0	35.0
TLV1117-33CDCYR	SOT-223	DCY	4	2500	340.0	340.0	38.0
TLV1117-33CDCYR	SOT-223	DCY	4	2500	350.0	334.0	47.0
TLV1117-33CDRJR	SON	DRJ	8	1000	210.0	185.0	35.0
TLV1117-33CKVURG3	TO-252	KVU	3	2500	340.0	340.0	38.0
TLV1117-33CKVURG3	TO-252	KVU	3	2500	350.0	334.0	47.0
TLV1117-33IDCYR	SOT-223	DCY	4	2500	350.0	334.0	47.0
TLV1117-33IDCYR	SOT-223	DCY	4	2500	340.0	340.0	38.0
TLV1117-33IDCYR	SOT-223	DCY	4	2500	336.0	336.0	48.0
TLV1117-33IDRJR	SON	DRJ	8	1000	210.0	185.0	35.0
TLV1117-33IKVURG3	TO-252	KVU	3	2500	350.0	334.0	47.0
TLV1117-33IKVURG3	TO-252	KVU	3	2500	340.0	340.0	38.0
TLV1117-50CDCYR	SOT-223	DCY	4	2500	340.0	340.0	38.0
TLV1117-50CDCYR	SOT-223	DCY	4	2500	350.0	334.0	47.0
TLV1117-50CDRJR	SON	DRJ	8	3000	367.0	367.0	35.0
TLV1117-50CKVURG3	TO-252	KVU	3	2500	350.0	334.0	47.0
TLV1117-50CKVURG3	TO-252	KVU	3	2500	340.0	340.0	38.0
TLV1117-50IDCYR	SOT-223	DCY	4	2500	340.0	340.0	38.0
TLV1117-50IDCYR	SOT-223	DCY	4	2500	350.0	334.0	47.0
TLV1117-50IDCYR	SOT-223	DCY	4	2500	336.0	336.0	48.0
TLV1117-50IDRJR	SON	DRJ	8	1000	210.0	185.0	35.0
TLV1117-50IKVURG3	TO-252	KVU	3	2500	350.0	334.0	47.0
TLV1117-50IKVURG3	TO-252	KVU	3	2500	340.0	340.0	38.0
TLV1117CDCYR	SOT-223	DCY	4	2500	340.0	340.0	38.0
TLV1117CDCYR	SOT-223	DCY	4	2500	336.0	336.0	48.0
TLV1117CDCYR	SOT-223	DCY	4	2500	350.0	334.0	47.0
TLV1117CDRJR	SON	DRJ	8	1000	210.0	185.0	35.0
TLV1117CKTTR	DDPAK/TO-263	KTT	3	500	350.0	334.0	47.0
TLV1117CKTTR	DDPAK/TO-263	KTT	3	500	340.0	340.0	38.0
TLV1117CKVURG3	TO-252	KVU	3	2500	340.0	340.0	38.0
TLV1117CKVURG3	TO-252	KVU	3	2500	350.0	334.0	47.0
TLV1117IDCYR	SOT-223	DCY	4	2500	336.0	336.0	48.0
TLV1117IDCYR	SOT-223	DCY	4	2500	340.0	340.0	38.0
TLV1117IDCYR	SOT-223	DCY	4	2500	350.0	334.0	47.0

Device	Package Type	Package Drawing	Pins	SPQ	Length (mm)	Width (mm)	Height (mm)
TLV1117IDRJR	SON	DRJ	8	1000	210.0	185.0	35.0
TLV1117IKTTR	DDPAK/TO-263	KTT	3	500	340.0	340.0	38.0
TLV1117IKTTR	DDPAK/TO-263	KTT	3	500	350.0	334.0	47.0
TLV1117IKVURG3	TO-252	KVU	3	2500	340.0	340.0	38.0
TLV1117IKVURG3	TO-252	KVU	3	2500	350.0	334.0	47.0

TUBE

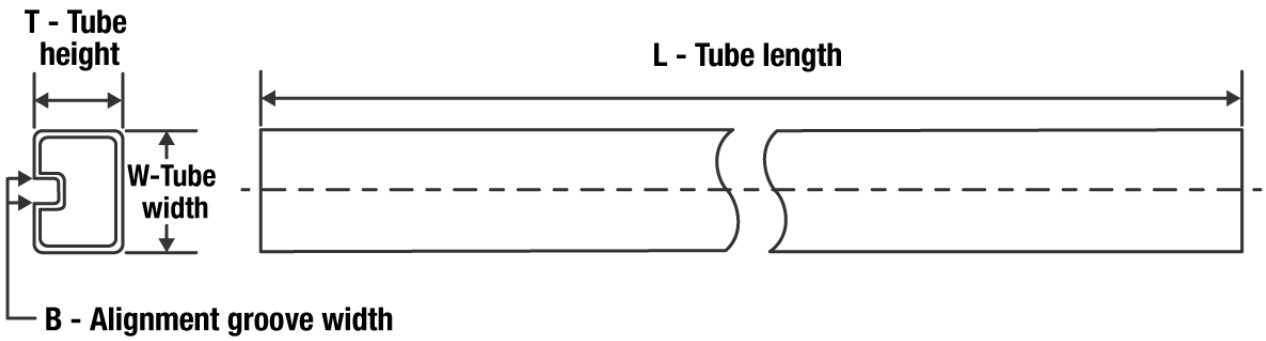

*All dimensions are nominal

Device	Package Name	Package Type	Pins	SPQ	L (mm)	W (mm)	T (µm)	B (mm)
TLV1117-15CDCY	DCY	SOT-223	4	80	559	8.6	500	3.6
TLV1117-15IDCY	DCY	SOT-223	4	80	559	8.6	500	3.6
TLV1117-18CDCY	DCY	SOT-223	4	80	559	8.6	500	3.6
TLV1117-18IDCY	DCY	SOT-223	4	80	559	8.6	500	3.6
TLV1117-25CDCY	DCY	SOT-223	4	80	559	8.6	500	3.6
TLV1117-25IDCY	DCY	SOT-223	4	80	559	8.6	500	3.6
TLV1117-33CDCY	DCY	SOT-223	4	80	559	8.6	500	3.6
TLV1117-33CDCYG3	DCY	SOT-223	4	80	559	8.6	500	3.6
TLV1117-33IDCY	DCY	SOT-223	4	80	559	8.6	500	3.6
TLV1117-33IDCYG3	DCY	SOT-223	4	80	559	8.6	500	3.6
TLV1117-50CDCY	DCY	SOT-223	4	80	559	8.6	500	3.6
TLV1117-50CDCYG3	DCY	SOT-223	4	80	559	8.6	500	3.6
TLV1117-50IDCY	DCY	SOT-223	4	80	559	8.6	500	3.6
TLV1117CDCY	DCY	SOT-223	4	80	559	8.6	500	3.6
TLV1117CDCY	DCY	SOT-223	4	80	542.9	8.6	3606	2.67
TLV1117CDCYG3	DCY	SOT-223	4	80	559	8.6	500	3.6
TLV1117CDCYG3	DCY	SOT-223	4	80	542.9	8.6	3606	2.67
TLV1117CKCS	KCS	TO-220	3	50	532	34.1	700	9.6
TLV1117CKCS	KCS	TO-220	3	50	532	34.1	700	9.6
TLV1117CKCT	KCT	TO-220	3	50	534.5	33	7000	3.4
TLV1117IDCY	DCY	SOT-223	4	80	542.9	8.6	3606	2.67
TLV1117IDCY	DCY	SOT-223	4	80	559	8.6	500	3.6
TLV1117IDCYG3	DCY	SOT-223	4	80	542.9	8.6	3606	2.67
TLV1117IDCYG3	DCY	SOT-223	4	80	559	8.6	500	3.6
TLV1117IKCS	KCS	TO-220	3	50	532	34.1	700	9.6
TLV1117IKCS	KCS	TO-220	3	50	532	34.1	700	9.6
TLV1117IKCSE3	KCS	TO-220	3	50	532	34.1	700	9.6
TLV1117IKCSE3	KCS	TO-220	3	50	532	34.1	700	9.6

DCY (R-PDSO-G4) **PLASTIC SMALL-OUTLINE**

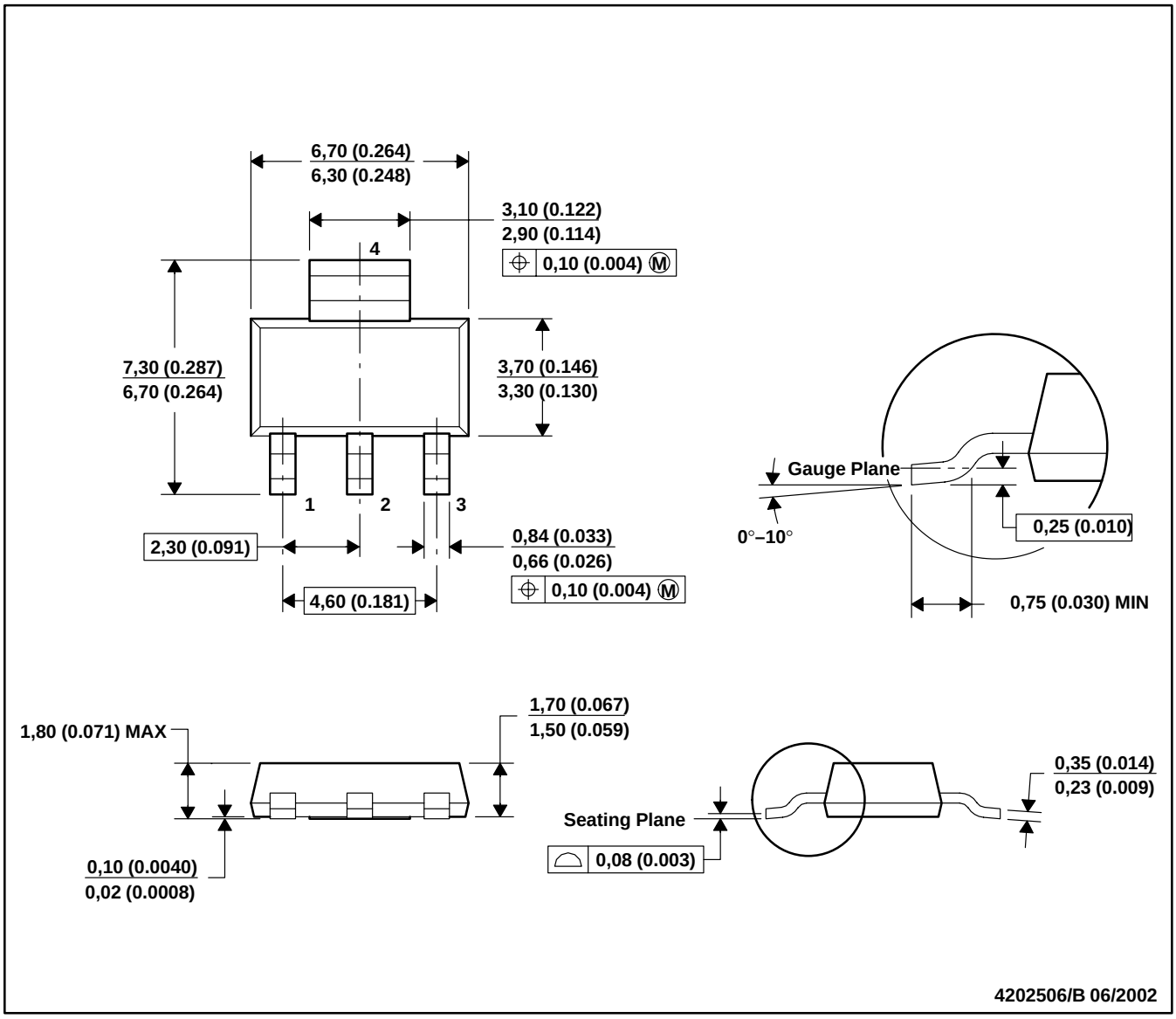

NOTES: A. All linear dimensions are in millimeters (inches).
B. This drawing is subject to change without notice.
C. Body dimensions do not include mold flash or protrusion.
D. Falls within JEDEC TO-261 Variation AA.

DRJ (S-PWSON-N8) PLASTIC SMALL OUTLINE NO-LEAD

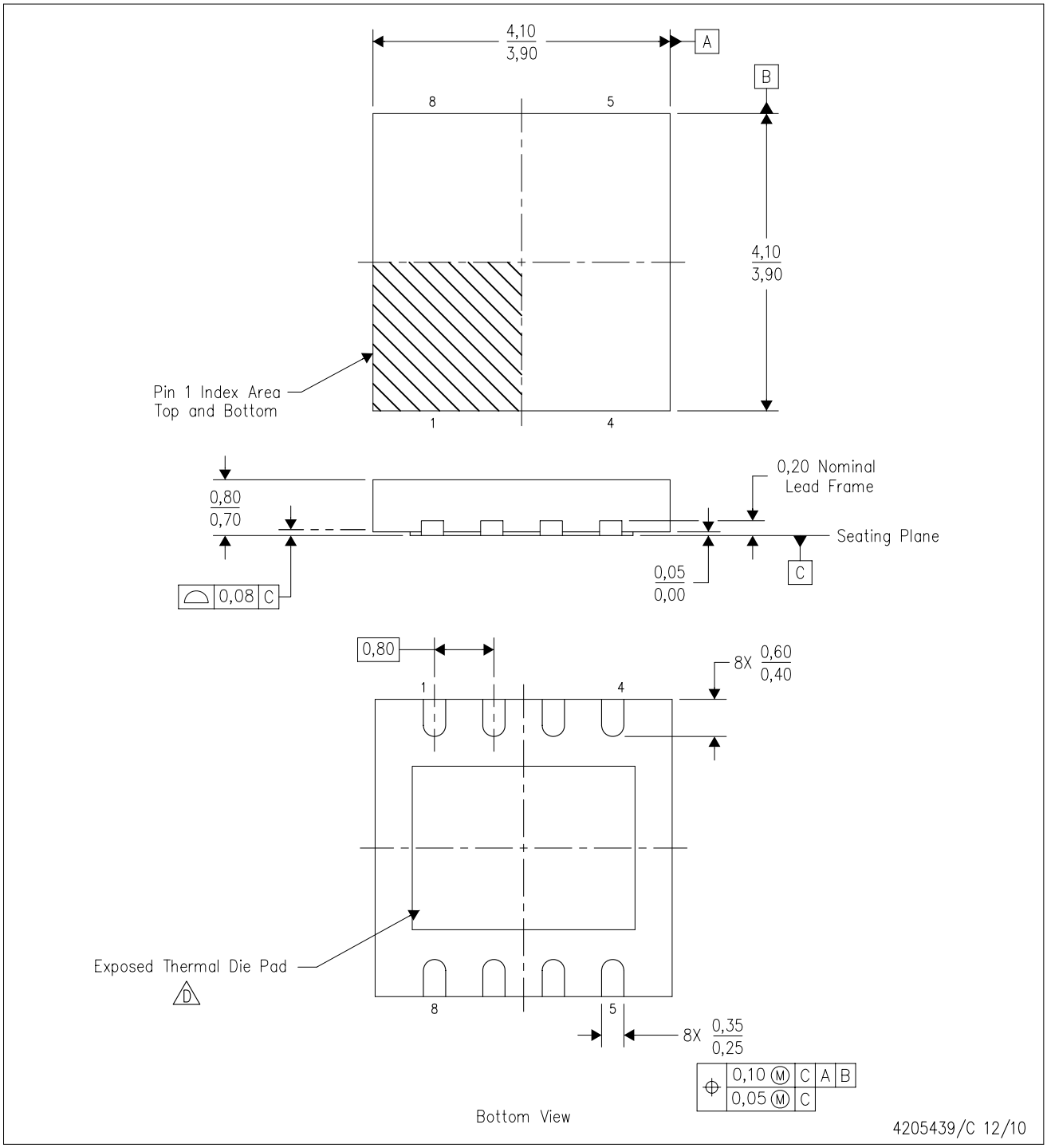

NOTES:
A. All linear dimensions are in millimeters. Dimensioning and tolerancing per ASME Y14.5M-1994.
B. This drawing is subject to change without notice.
C. SON (Small Outline No-Lead) package configuration.
D. The package thermal pad must be soldered to the board for thermal and mechanical performance. See the Product Data Sheet for details regarding the exposed thermal pad dimensions.
E. Package complies to JEDEC MO-229 variation WGGB.

DRJ (S-PWSON-N8) PLASTIC SMALL OUTLINE NO-LEAD

THERMAL INFORMATION

This package incorporates an exposed thermal pad that is designed to be attached directly to an external heatsink. The thermal pad must be soldered directly to the printed circuit board (PCB). After soldering, the PCB can be used as a heatsink. In addition, through the use of thermal vias, the thermal pad can be attached directly to the appropriate copper plane shown in the electrical schematic for the device, or alternatively, can be attached to a special heatsink structure designed into the PCB. This design optimizes the heat transfer from the integrated circuit (IC).

For information on the Quad Flatpack No-Lead (QFN) package and its advantages, refer to Application Report, QFN/SON PCB Attachment, Texas Instruments Literature No. SLUA271. This document is available at www.ti.com.

The exposed thermal pad dimensions for this package are shown in the following illustration.

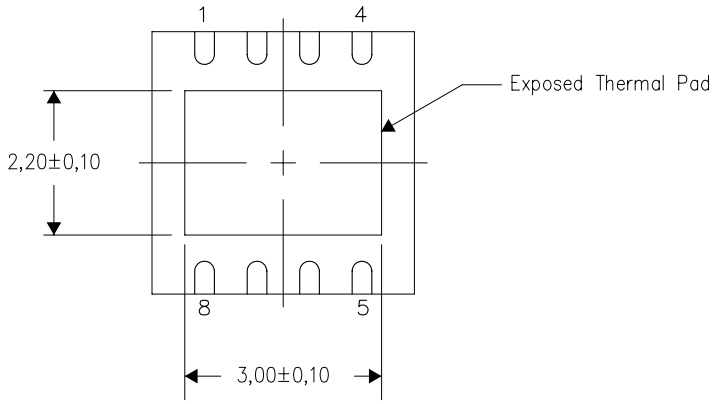

Bottom View

Exposed Thermal Pad Dimensions

4206882/F 01/11

NOTE: All linear dimensions are in millimeters

DRJ (S-PWSON-N8) SMALL PACKAGE OUTLINE NO-LEAD

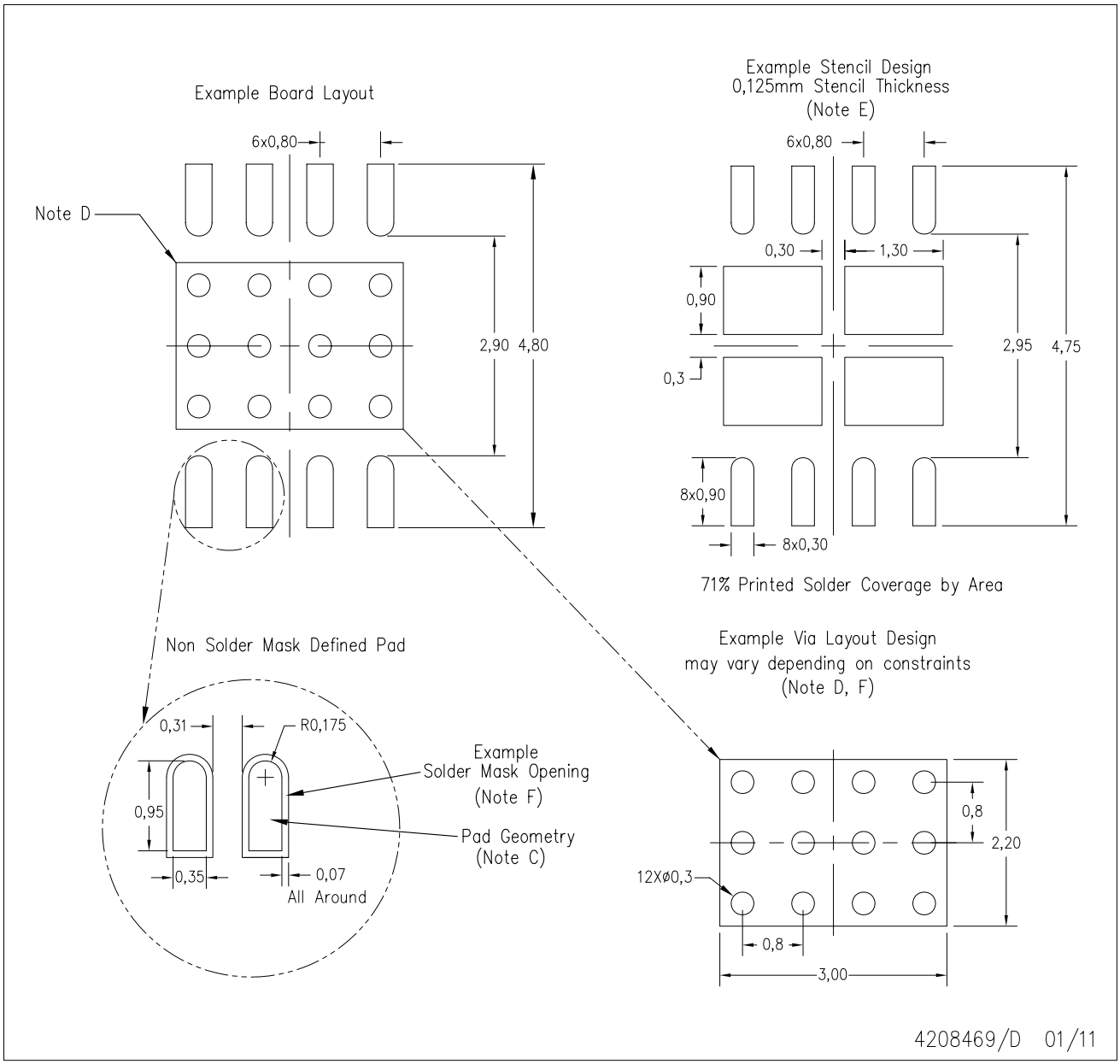

NOTES:
A. All linear dimensions are in millimeters.
B. This drawing is subject to change without notice.
C. Publication IPC-7351 is recommended for alternate designs.
D. This package is designed to be soldered to a thermal pad on the board. Refer to Application Note, Quad Flat-Pack Packages, Texas Instruments Literature No. SLUA271, and also the Product Data Sheets for specific thermal information, via requirements, and recommended board layout. These documents are available at www.ti.com <http://www.ti.com>.
E. Laser cutting apertures with electropolish and also rounding corners will offer better paste release. Customers should contact their board assembly site for stencil design recommendations. Refer to IPC 7525 for stencil design considerations.
F. Customers should contact their board fabrication site for solder mask tolerances and vias tenting recommendations for vias placed in the thermal pad.

KTT (R–PSFM–G3) PLASTIC FLANGE–MOUNT PACKAGE

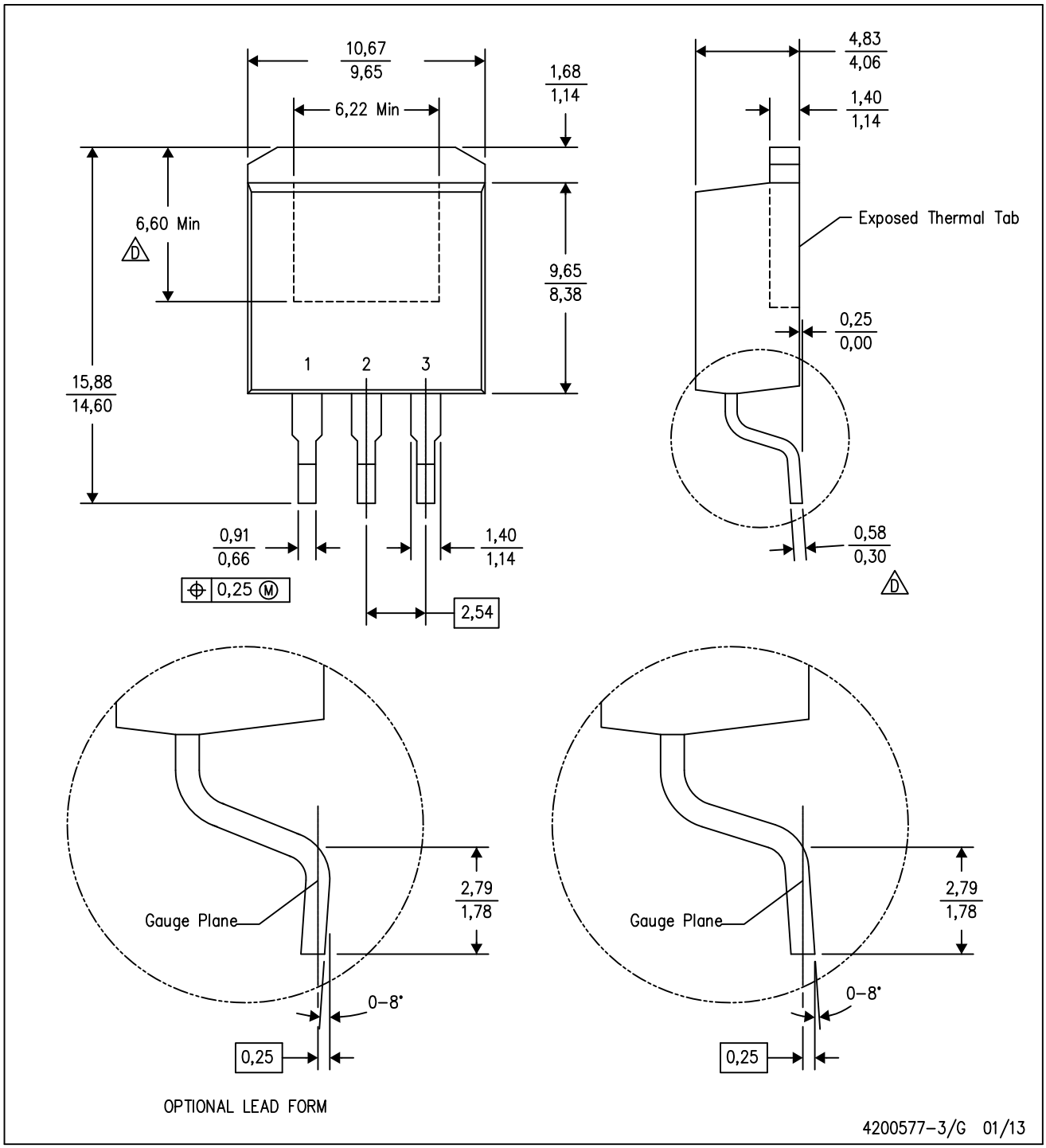

NOTES:
A. All linear dimensions are in millimeters.
B. This drawing is subject to change without notice.
C. Body dimensions do not include mold flash or protrusion. Mold flash or protrusion not to exceed 0.005 (0,13) per side.
D. Falls within JEDEC TO–263 variation AA, except minimum lead thickness and minimum exposed pad length.

KTT (R–PSFM–G3) PLASTIC FLANGE–MOUNT PACKAGE

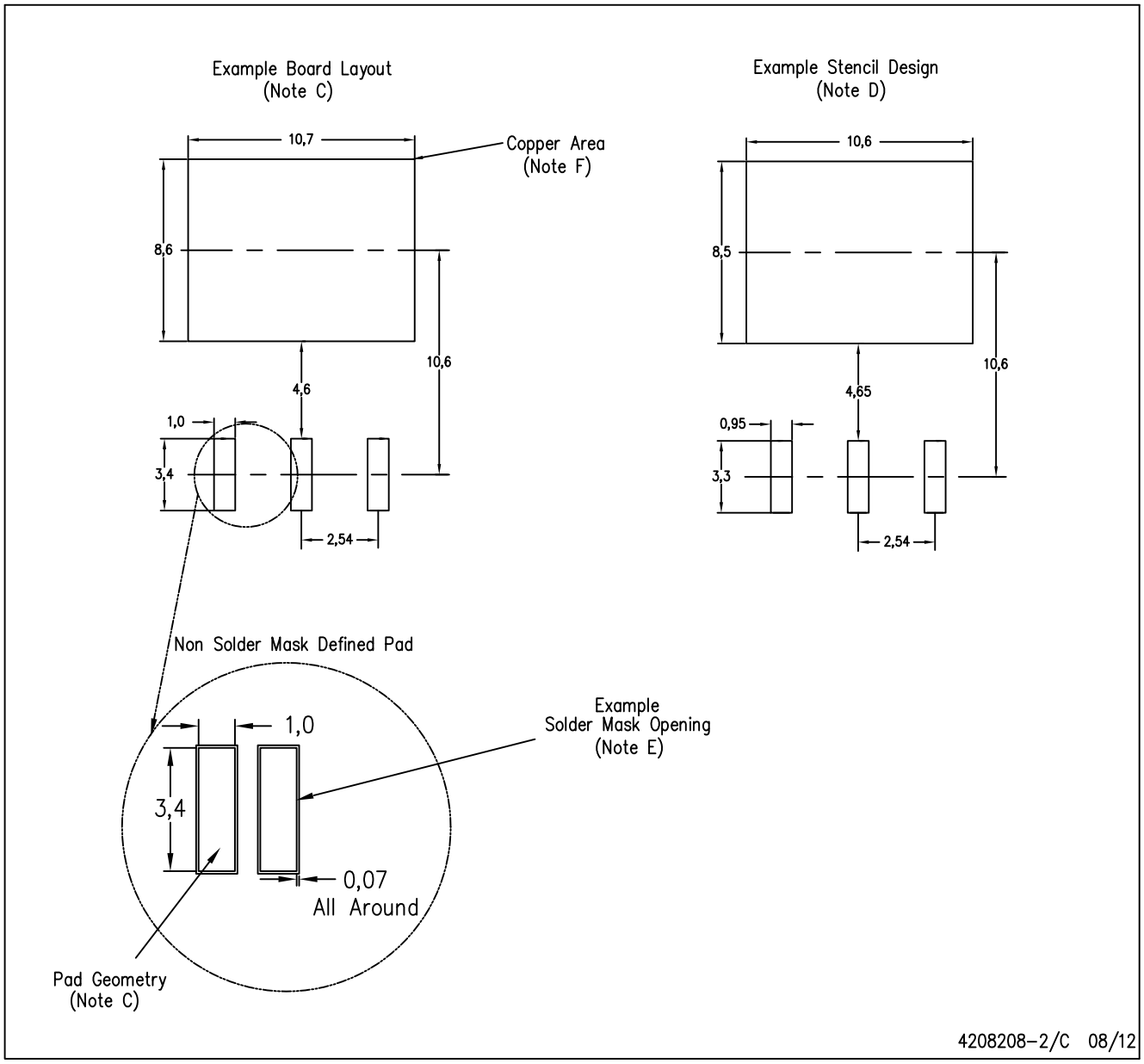

NOTES:
A. All linear dimensions are in millimeters.
B. This drawing is subject to change without notice.
C. Publication IPC–SM–782 is recommended for alternate designs.
D. Laser cutting apertures with trapezoidal walls and also rounding corners will offer better paste release. Customers should contact their board assembly site for stencil design recommendations. Refer to IPC–7525.
E. Customers should contact their board fabrication site for solder mask tolerances between and around signal pads.
F. This package is designed to be soldered to a thermal pad on the board. Refer to the Product Datasheet for specific thermal information, via requirements, and recommended thermal pad size. For thermal pad sizes larger than shown a solder mask defined pad is recommended in order to maintain the solderable pad geometry while increasing copper area.

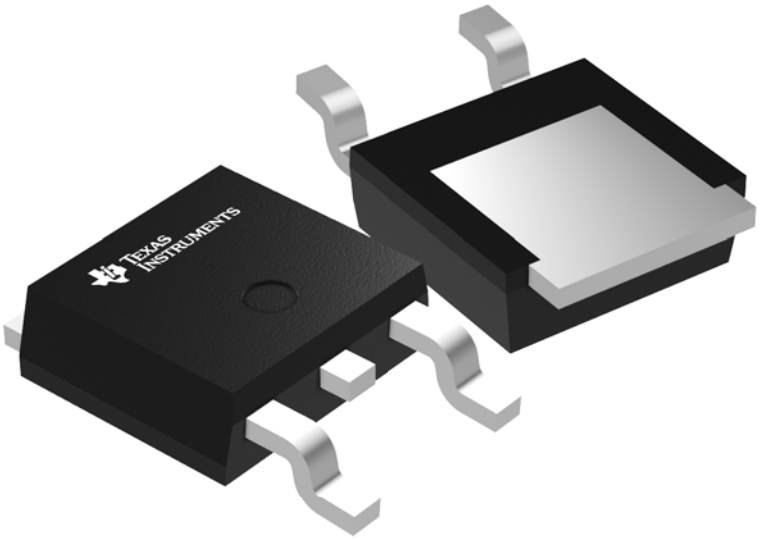

Images above are just a representation of the package family, actual package may vary.
Refer to the product data sheet for package details.

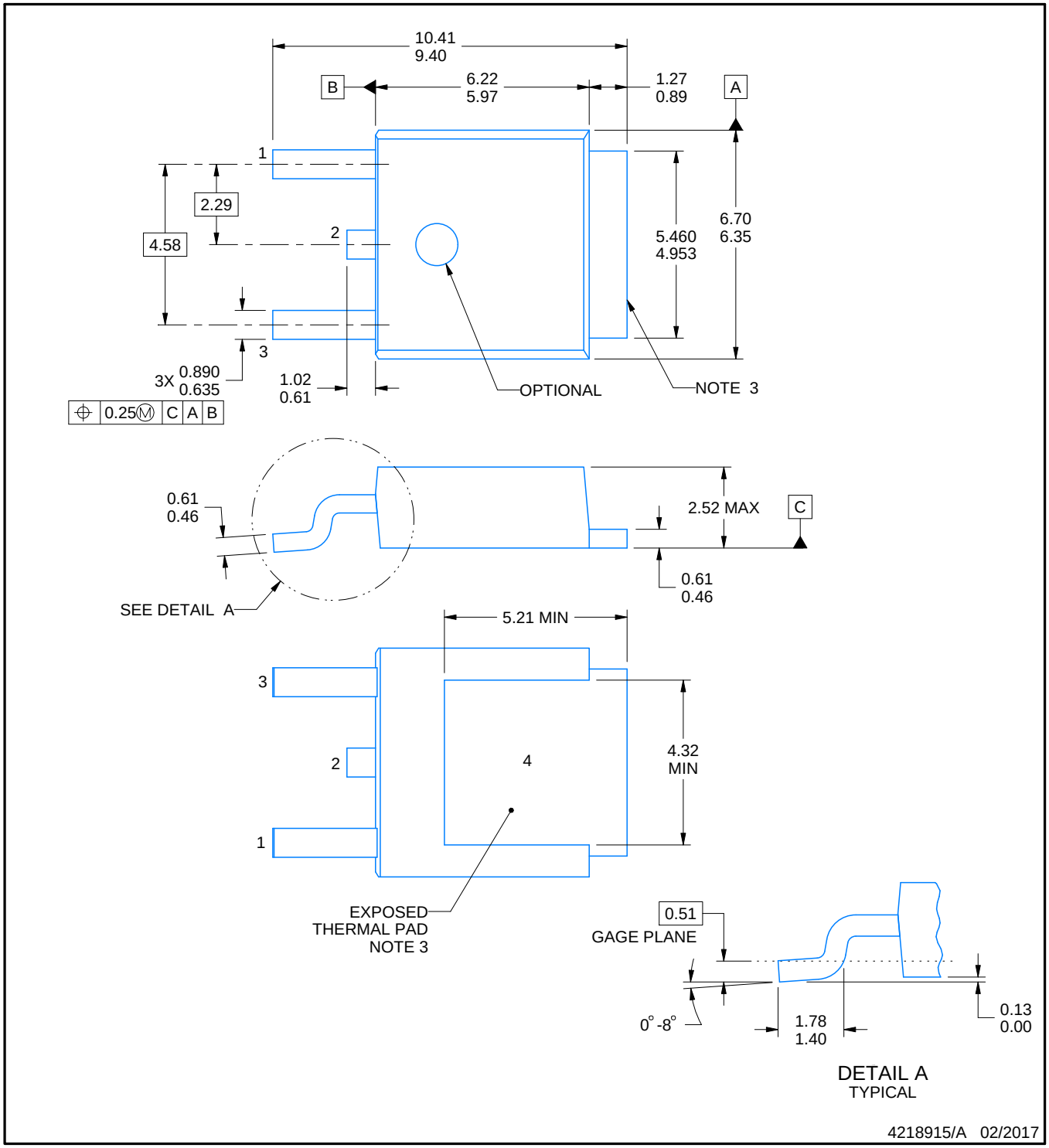

NOTES:

1. All linear dimensions are in millimeters. Any dimensions in parenthesis are for reference only. Dimensioning and tolerancing per ASME Y14.5M.
2. This drawing is subject to change without notice.
3. Shape may vary per different assembly sites.
4. Reference JEDEC registration TO-252.

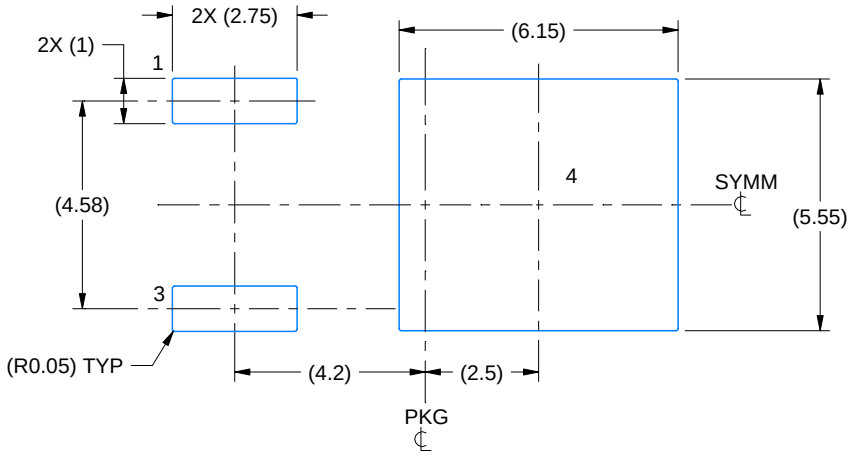

LAND PATTERN EXAMPLE
EXPOSED METAL SHOWN
SCALE:6X

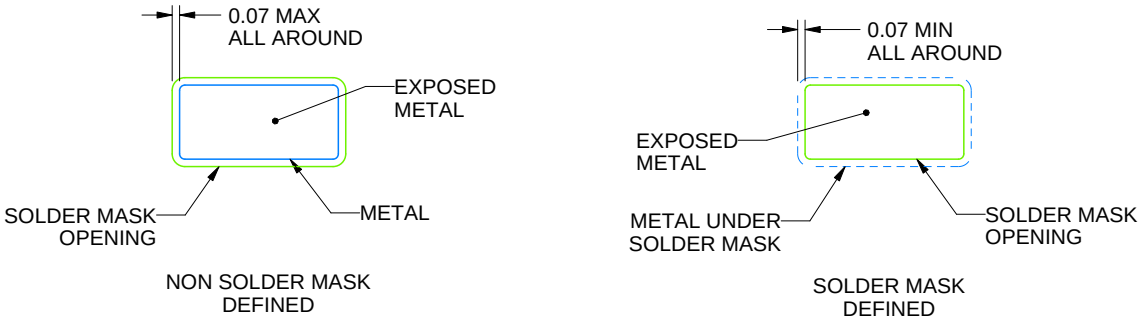

SOLDER MASK DETAILS
NOT TO SCALE

4218915/A 02/2017

NOTES: (continued)

5. This package is designed to be soldered to a thermal pad on the board. For more information, see Texas Instruments literature numbers SLMA002(www.ti.com/lit/slm002) and SLMA004 (www.ti.com/lit/slma004).
6. Vias are optional depending on application, refer to device data sheet. It is recommended that vias under paste be filled, plugged or tented.

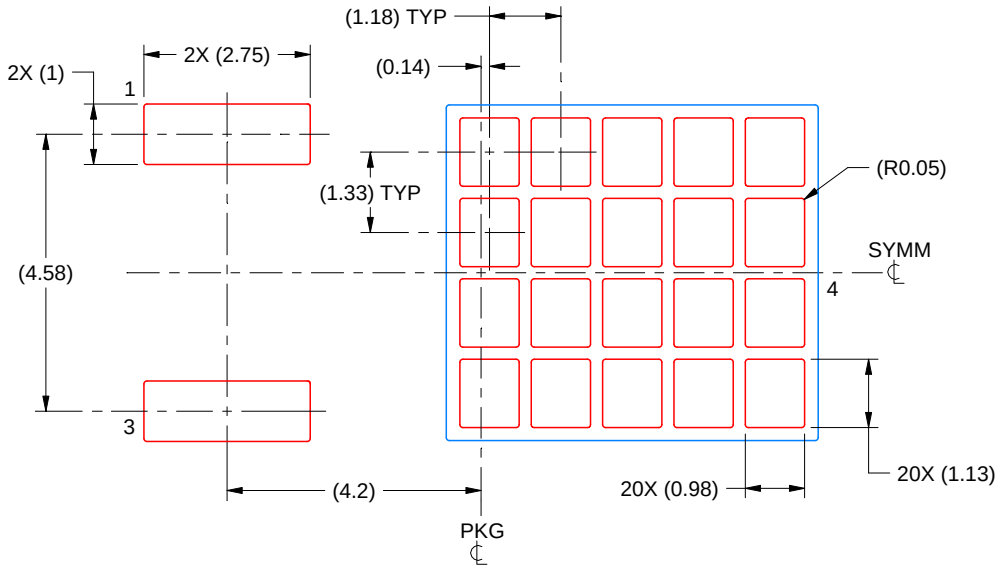

SOLDER PASTE EXAMPLE
BASED ON 0.125 mm THICK STENCIL

EXPOSED PAD
65% PRINTED SOLDER COVERAGE BY AREA
SCALE:8X

4218915/A 02/2017

NOTES: (continued)

7. Laser cutting apertures with trapezoidal walls and rounded corners may offer better paste release. IPC-7525 may have alternate design recommendations.
8. Board assembly site may have different recommendations for stencil design.

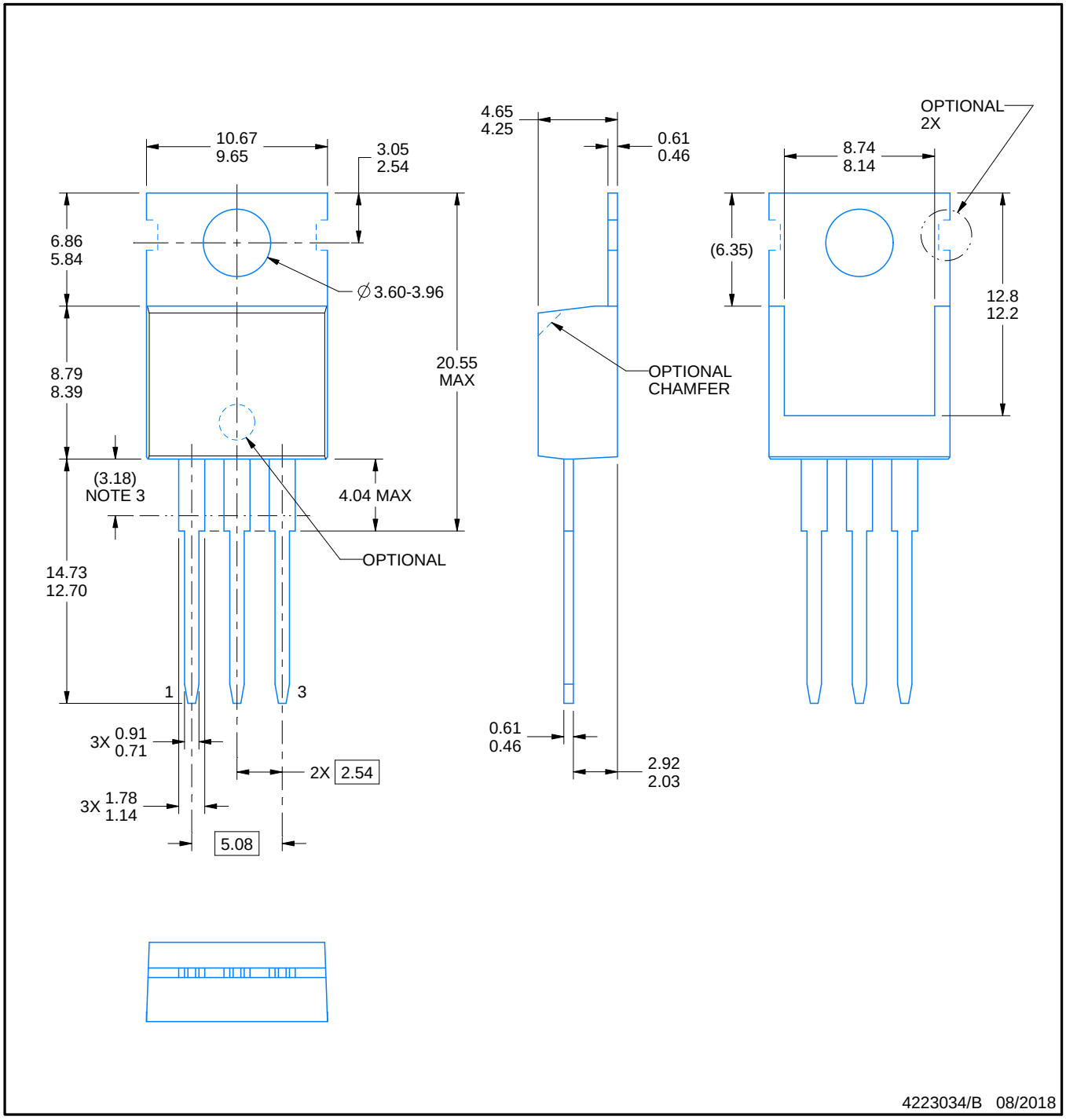

NOTES:

1. Dimensions are in millimeters. Any dimension in brackets or parenthesis are for reference only. Dimensioning and tolerancing per ASME Y14.5M.
2. This drawing is subject to change without notice.
3. Lead dimensions are not controlled within this area.
4. Reference JEDEC registration TO-220.

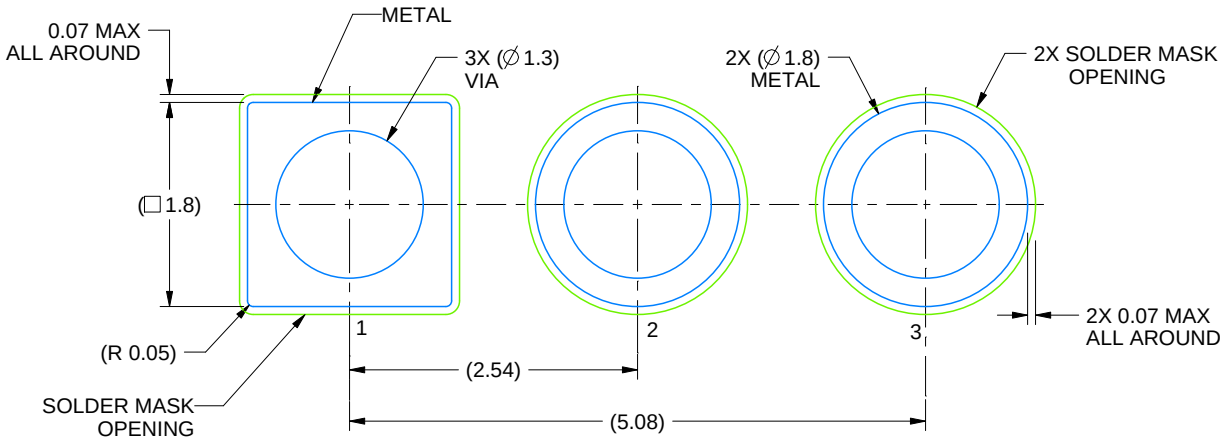

LAND PATTERN EXAMPLE
NON-SOLDER MASK DEFINED
SCALE:15X

4223034/B 08/2018

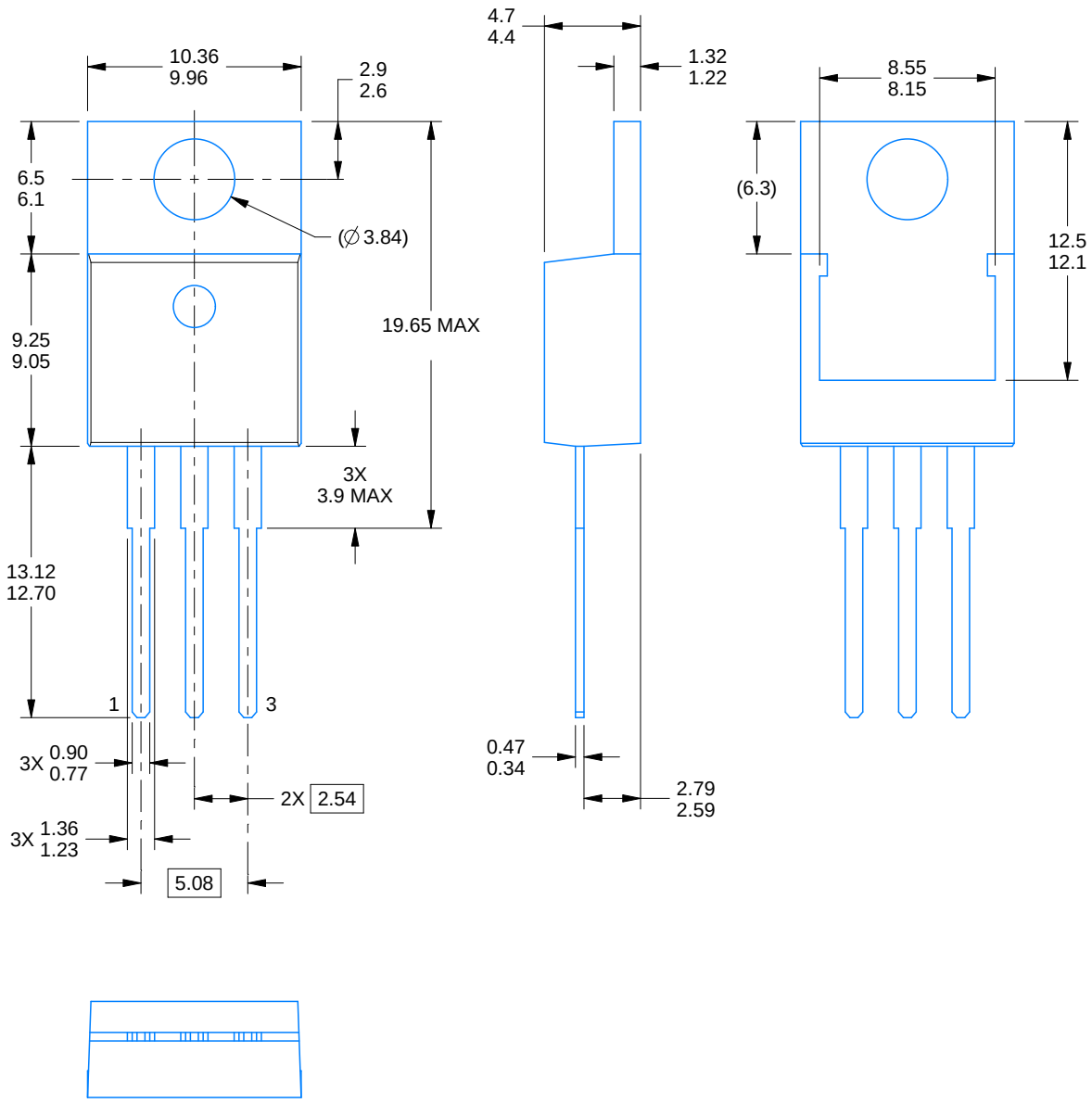

4222214/B 08/2018

NOTES:

1. Dimensions are in millimeters. Any dimension in brackets or parenthesis are for reference only. Dimensioning and tolerancing per ASME Y14.5M.
2. This drawing is subject to change without notice.
3. Reference JEDEC registration TO-220.

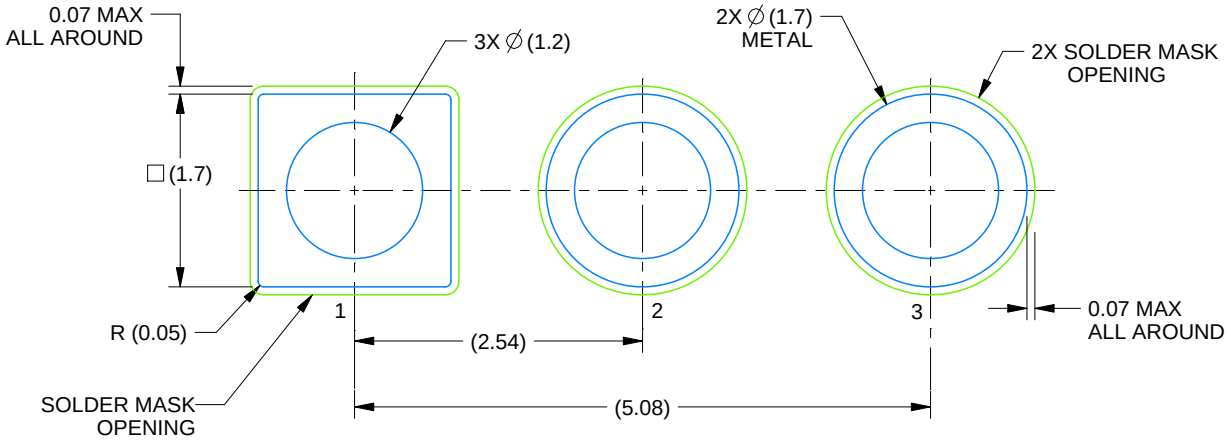

LAND PATTERN EXAMPLE
NON-SOLDER MASK DEFINED
SCALE:15X

4222214/B 08/2018

IMPORTANT NOTICE AND DISCLAIMER

TI PROVIDES TECHNICAL AND RELIABILITY DATA (INCLUDING DATA SHEETS), DESIGN RESOURCES (INCLUDING REFERENCE DESIGNS), APPLICATION OR OTHER DESIGN ADVICE, WEB TOOLS, SAFETY INFORMATION, AND OTHER RESOURCES “AS IS” AND WITH ALL FAULTS, AND DISCLAIMS ALL WARRANTIES, EXPRESS AND IMPLIED, INCLUDING WITHOUT LIMITATION ANY IMPLIED WARRANTIES OF MERCHANTABILITY, FITNESS FOR A PARTICULAR PURPOSE OR NON-INFRINGEMENT OF THIRD PARTY INTELLECTUAL PROPERTY RIGHTS.

These resources are intended for skilled developers designing with TI products. You are solely responsible for (1) selecting the appropriate TI products for your application, (2) designing, validating and testing your application, and (3) ensuring your application meets applicable standards, and any other safety, security, regulatory or other requirements.

These resources are subject to change without notice. TI grants you permission to use these resources only for development of an application that uses the TI products described in the resource. Other reproduction and display of these resources is prohibited. No license is granted to any other TI intellectual property right or to any third party intellectual property right. TI disclaims responsibility for, and you will fully indemnify TI and its representatives against, any claims, damages, costs, losses, and liabilities arising out of your use of these resources.

TI’s products are provided subject to TI’s Terms of Sale or other applicable terms available either on ti.com or provided in conjunction with such TI products. TI’s provision of these resources does not expand or otherwise alter TI’s applicable warranties or warranty disclaimers for TI products.

TI objects to and rejects any additional or different terms you may have proposed.

Mailing Address: Texas Instruments, Post Office Box 655303, Dallas, Texas 75265
Copyright © 2022, Texas Instruments Incorporated