- **Conversion Time ≤ 10 µs**
- **10-Bit-Resolution ADC**
- **Programmable Power-Down Mode . . . 1 µA**
- **Wide Range Single-Supply Operation of 2.7 V dc to 5.5 V dc**
- **Analog Input Range of 0 V to V_{CC}**
- **Built-in Analog Multiplexer with 8 Analog Input Channels**
- **TMS320 DSP and Microprocessor SPI and QSPI Compatible Serial Interfaces**
- **End-of-Conversion (EOC) Flag**
- **Inherent Sample-and-Hold Function**
- **Built-In Self-Test Modes**
- **Programmable Power and Conversion Rate**
- **Asynchronous Start of Conversion for Extended Sampling**
- **Hardware I/O Clock Phase Adjust Input**

D OR PW PACKAGE
(TOP VIEW)

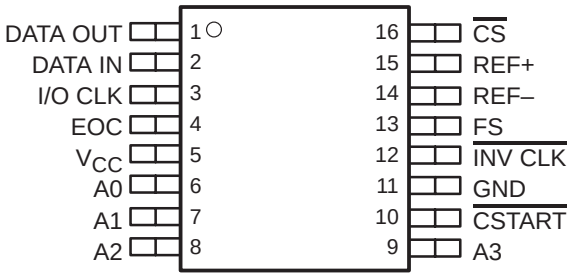

DB OR J PACKAGE
(TOP VIEW)

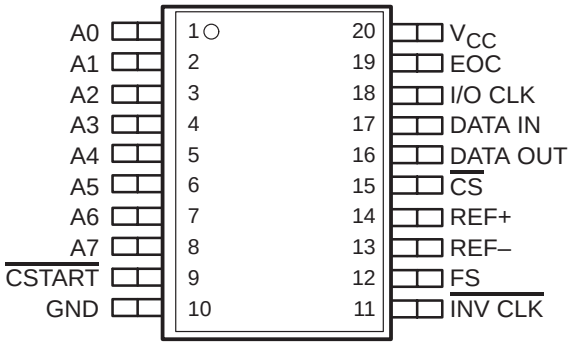

FK PACKAGE
(TOP VIEW)

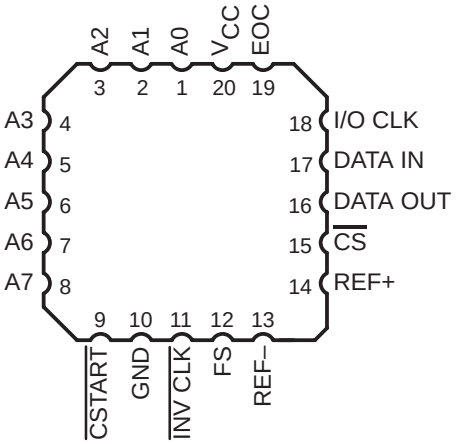

description

The TLV1544 and TLV1548 are CMOS 10-bit switched-capacitor successive-approximation (SAR) analog-to-digital (A/D) converters. Each device has a chip select ($\overline{CS}$), input-output clock (I/O CLK), data input (DATA IN) and serial data output (DATA OUT) that provide a direct 4-wire synchronous serial peripheral interface (SPI™, QSPI™) port of a host microprocessor. When interfacing with a TMS320 DSP, an additional frame sync signal (FS) indicates the start of a serial data frame. The devices allow high-speed data transfers from the host. The $\overline{INV\ CLK}$ input provides further timing flexibility for the serial interface.

In addition to a high-speed converter and versatile control capability, the device has an on-chip 11-channel multiplexer that can select any one of eight analog inputs or any one of three internal self-test voltages. The sample-and-hold function is automatic except for the extended sampling cycle, where the sampling cycle is started by the falling edge of asynchronous $\overline{CSTART}$. At the end of the A/D conversion, the end-of-conversion (EOC) output goes high to indicate that the conversion is complete. The TLV1544 and TLV1548 are designed to operate with a wide range of supply voltages with very low power consumption. The power saving feature is further enhanced with a software-programmed power-down mode and conversion rate. The converter incorporated in the device features differential high-impedance reference inputs that facilitate ratiometric conversion, scaling, and isolation of analog circuitry from logic and supply noise. A switched-capacitor design allows low-error conversion over the full operating temperature range.

SPI and QSPI are registered trademarks of Motorola, Inc.

PRODUCTION DATA information is current as of publication date. Products conform to specifications per the terms of Texas Instruments standard warranty. Production processing does not necessarily include testing of all parameters.

Copyright © 1999, Texas Instruments Incorporated

description (continued)

The TLV1544 has four analog input channels while the TLV1548 has eight analog input channels. The TLV1544C and TLV1548C are characterized for operation from 0°C to 70°C. The TLV1544I and TLV1548I are characterized for operation over the full industrial temperature range of –40°C to 85°C. The TLV1548M is characterized for operation over the full military temperature range of –55°C to 125°C.

functional block diagram

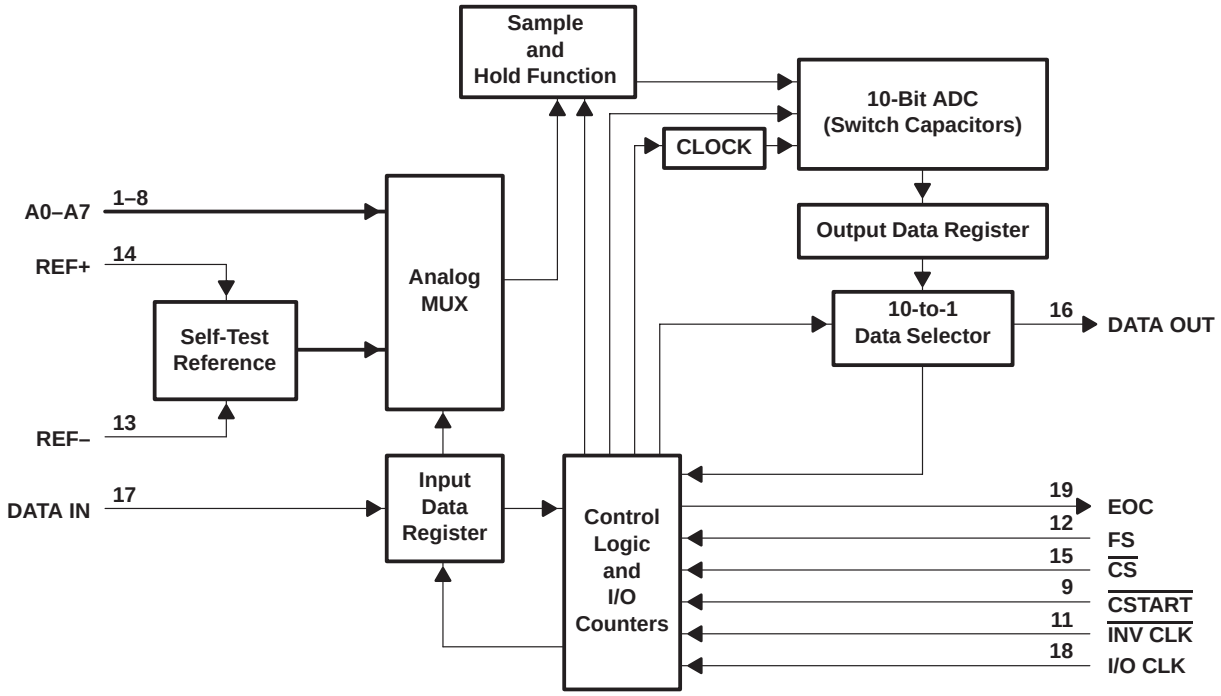

Terminals shown are for the DB package.

AVAILABLE OPTIONS

T_A	PACKAGE				
	SMALL OUTLINE				
	(DB)	(D)	(PW)	(J)	(FK)
0°C to 70°C	TLV1548CDB	TLV1544CD	TLV1544CPW		
–40°C to 85°C	TLV1548IDB	TLV1544ID	TLV1544IPW		
–55°C to 125°C				TLV1548MJ	TLV1548MFK

DISSIPATION RATING TABLE

PACKAGE	$T_A \le 25°C$ POWER RATING	DERATING FACTOR† ABOVE $T_A = 25°C$	$T_A = 70°C$ POWER RATING	$T_A = 85°C$ POWER RATING	$T_A = 125°C$ POWER RATING
DB	785 mW	8.7 mW/°C	393 mW	261 mW	—
D	799 mW	8.9 mW/°C	399 mW	266 mW	—
PW	604 mW	6.7 mW/°C	302 mW	201 mW	—
J	1894 mW	15.1 mW/°C	1212 mW	985 mW	379 mW
FK	1375 mW	11.0 mW/°C	880 mW	715 mW	275 mW

† This is the inverse of the traditional junction-to-ambient thermal resistance ($R\Theta_{JA}$). $R\Theta_{JA}$ values are derived from Texas Instruments characterization data. Thermal resistance is not production tested and values are given for informational purposes only.

Terminal Functions

TERMINAL NAME	TERMINAL NO.†	TERMINAL NO.‡	I/O	DESCRIPTION
A0–A3 A4–A7	6–9 –	1–4 5–8	I	Analog inputs. The analog inputs are internally multiplexed. (For a source impedance greater than 1 kΩ, the asynchronous start should be used to increase the sampling time.)
$\overline{CS}$	16	15	I	Chip select. A high-to-low transition on $\overline{CS}$ resets the internal counters and controls and enables DATA IN, DATA OUT, and I/O CLK within the maximum setup time. A low-to-high transition disables DATA IN, DATA OUT, and I/O CLK within the setup time.
$\overline{CSTART}$	10	9	I	Sampling/conversion start control. $\overline{CSTART}$ controls the start of the sampling of an analog input from a selected multiplex channel. A high-to-low transition starts the sampling of the analog input signal. A low-to-high transition puts the sample-and-hold function in hold mode and starts the conversion. $\overline{CSTART}$ is independent from I/O CLK and works when $\overline{CS}$ is high. The low $\overline{CSTART}$ duration controls the duration of the sampling cycle for the switched capacitor array. $\overline{CSTART}$ is tied to V_{CC} if not used.
DATA IN	2	17	I	Serial data input. The 4-bit serial data selects the desired analog input and test voltage to be converted next in a normal cycle. These bits can also set the conversion rate and enable the power-down mode. When operating in the microprocessor mode, the input data is presented MSB first and is shifted in on the first four rising ($\overline{INV\ CLK}$ = V_{CC}) or falling ($\overline{INV\ CLK}$ = GND) edges of I/O CLK (after $\overline{CS}$↓). When operating in the DSP mode, the input data is presented MSB first and is shifted in on the first four falling ($\overline{INV\ CLK}$ = V_{CC}) or rising ($\overline{INV\ CLK}$ = GND) edges of I/O CLK (after FS↓). After the four input data bits have been read into the input data register, DATA IN is ignored for the remainder of the current conversion period.
DATA OUT	1	16	O	Three-state serial output of the A/D conversion result. DATA OUT is in the high-impedance state when $\overline{CS}$ is high and active when $\overline{CS}$ is low or after FS↓ (in DSP mode). With a valid $\overline{CS}$ signal, DATA OUT is removed from the high-impedance state and is driven to the logic level corresponding to the MSB or LSB value of the previous conversion result. DATA OUT changes on the falling (microprocessor mode) or rising (DSP mode) edge of I/O CLK.
EOC	4	19	O	End of conversion. EOC goes from a high to a low logic level on the tenth rising (microprocessor mode) or tenth falling (DSP mode) edge of I/O CLK and remains low until the conversion is complete and data is ready for transfer. EOC can also indicate that the converter is busy.
FS	13	12	I	DSP frame synchronization input. FS indicates the start of a serial data frame into or out of the device. FS is tied to V_{CC} when interfacing the device with a microprocessor.
GND	11	10		Ground return for internal circuitry. All voltage measurements are with respect to GND, unless otherwise noted.
$\overline{INV\ CLK}$	12	11	I	Inverted clock input. $\overline{INV\ CLK}$ is tied to GND when an inverted I/O CLK is used as the source of the input clock. This affects both microprocessor and DSP interfaces. $\overline{INV\ CLK}$ is tied to V_{CC} if I/O CLK is not inverted. $\overline{INV\ CLK}$ can also invoke a built-in test mode.

† Terminal numbers are for the D package.
‡ Terminal numbers are for the DB, J, and FK packages.

Terminal Functions (Continued)

TERMINAL NAME	TERMINAL NO.†	TERMINAL NO.‡	I/O	DESCRIPTION
I/O CLK	3	18	I	Input/output clock. I/O CLK receives the serial I/O clock input in the two modes and performs the following four functions in each mode: **Microprocessor mode** ● When $\overline{\text{INVCLK}}$ = V_{CC}, I/O CLK clocks the four input data bits into the input data register on the first four rising edges of I/O CLK after $\overline{\text{CS}}$↓ with the multiplexer address available after the fourth rising edge. When $\overline{\text{INV CLK}}$ = GND, input data bits are clocked in on the first four falling edges instead. ● On the fourth falling edge of I/O CLK, the analog input voltage on the selected multiplex input begins charging the capacitor array and continues to do so until the tenth rising edge of I/O CLK except in the extended sampling cycle where the duration of $\overline{\text{CSTART}}$ determines when to end the sampling cycle. ● Output data bits change on the first ten falling I/O clock edges regardless of the condition of $\overline{\text{INV CLK}}$. ● I/O CLK transfers control of the conversion to the internal state machine on the tenth rising edge of I/O CLK regardless of the condition of $\overline{\text{INV CLK}}$. **Digital signal processor (DSP) mode** ● When $\overline{\text{INV CLK}}$ = V_{CC}, I/O CLK clocks the four input data bits into the input data register on the first four falling edges of I/O CLK after FS↓ with the multiplexer address available after the fourth falling edges. When $\overline{\text{INV CLK}}$ = GND, input data bits are clocked in on the first four rising edges instead. ● On the fourth rising edge of I/O CLK, the analog input voltage on the selected multiplex input begins charging the capacitor array and continues to do so until the tenth falling edge of I/O CLK except in the extended sampling cycle where the duration of $\overline{\text{CSTART}}$ determines when to end the sampling cycle. ● Output data MSB shows after FS↓ and the rest of the output data bits change on the first ten rising I/O CLK edges regarless of the condition of $\overline{\text{INV CLK}}$. ● I/O CLK transfers control of the conversion to the internal state machine on the tenth falling edge of I/O CLK regardless of the condition of $\overline{\text{INV CLK}}$.
REF+	15	14	I	Upper reference voltage (nominally V_{CC}). The maximum input voltage range is determined by the difference between the voltages applied to REF+ and REF–.
REF–	14	13	I	Lower reference voltage (nominally ground)
V_{CC}	5	20	I	Positive supply voltage

† Terminal numbers are for the D package.
‡ Terminal numbers are for the DB, J, and FK packages.

detailed description

Initially, with $\overline{\text{CS}}$ high (inactive), DATA IN and I/O CLK are disabled and DATA OUT is in the high-impedance state. When the serial interface takes $\overline{\text{CS}}$ low (active), the conversion sequence begins with the enabling of I/O CLK and DATA IN and the removal of DATA OUT from the high-impedance state. The host then provides the 4-bit channel address to DATA IN and the I/O clock sequence to I/O CLK. During this transfer, the host serial interface also receives the previous conversion result from DATA OUT. I/O CLK receives an input sequence from the host that is from 10 to 16 clocks long. The first four valid I/O CLK cycles load the input data register with the 4-bit input data on DATA IN that selects the desired analog channel. The next six clock cycles provide the control timing for sampling the analog input. Sampling of the analog input is held after the first valid I/O CLK sequence of ten clocks. The tenth clock edge also takes EOC low and begins the conversion. The exact locations of the I/O clock edges depend on the mode of operation.

serial interface

The TLV1548 is compatible with generic microprocessor serial interfaces such as SPI and QSPI, and a TMS320 DSP serial interface. The internal latched flag If_mode is generated by sampling the state of FS at the falling edge of $\overline{\text{CS}}$. If_mode is set to one (for microprocessor) when FS is high at the falling edge of $\overline{\text{CS}}$, and If_mode is cleared to zero (for DSP) when FS is low at the falling edge of $\overline{\text{CS}}$. This flag controls the multiplexing of I/O CLK and the state machine reset function. FS is pulled high when interfacing with a microprocessor.

I/O CLK

The I/O CLK can go up to 10 MHz for most of the voltage range when fast I/O is possible. The maximum I/O CLK is limited to 2.8 MHz for a supply voltage range from 2.7 V. Table 1 lists the maximum I/O CLK frequencies for all different supply voltage ranges. This also depends on input source impedance. For example, I/O CLK speed faster than 2.39 MHz is achievable if the input source impedance is less than 1 kΩ.

Table 1. Maximum I/O CLK Frequency

V_{CC}	MAXIMUM INPUT RESISTANCE (Max)	SOURCE IMPEDANCE	I/O CLK
2.7 V	5 K	1 kΩ	2.39 MHz
		100 Ω	2.81 MHz
4.5 V	1 K	1 kΩ	7.18 MHz
		100 Ω	10 MHz

microprocessor serial interface

Input data bits from DATA IN are clocked in on the first four rising edges of the I/O CLK sequence if $\overline{\text{INV CLK}}$ is held high when the device is in microprocessor interface mode. Input data bits are clocked in on the first four falling edges of the I/O CLK sequence if $\overline{\text{INV CLK}}$ is held low. The MSB of the previous conversion appears on DATA OUT on the falling edge of $\overline{\text{CS}}$. The remaining nine bits are shifted out on the next nine edges (depending on the state of $\overline{\text{INV CLK}}$) of I/O CLK. Ten bits of data are transmitted to the host through DATA OUT.

A minimum of 9.5 clock pulses is required for the conversion to begin. On the tenth clock rising edge, the EOC output goes low and returns to the high logic level when the conversion is complete; then the result can be read by the host. On the tenth clock falling edge, the internal logic takes DATA OUT low to ensure that the remaining bit values are zero if the I/O CLK transfer is more than ten clocks long.

$\overline{\text{CS}}$ is inactive (high) between serial I/O CLK transfers. Each transfer takes at least ten I/O CLK cycles. The falling edge of $\overline{\text{CS}}$ begins the sequence by removing DATA OUT from the high-impedance state. The rising edge of $\overline{\text{CS}}$ ends the sequence by returning DATA OUT to the high-impedance state within the specified delay time. Also, the rising edge of $\overline{\text{CS}}$ disables I/O CLK and DATA IN within a setup time. A conversion does not begin until the tenth I/O CLK rising edge.

A high-to-low transition on $\overline{\text{CS}}$ within the specified time during an ongoing cycle aborts the cycle, and the device returns to the initial state (the output data register holds the previous conversion result). $\overline{\text{CS}}$ should not be taken low close to completion of conversion because the output data can be corrupted.

DSP interface

The TLV1544/1548 can also interface with a DSP, from the TMS320 family for example, through a serial port. The analog-to-digital converter (ADC) serves as a slave device where the DSP supplies FS and the serial I/O CLK. Transmit and receive operations are concurrent. The falling edge of FS must occur no later than seven I/O CLK periods after the falling edge of $\overline{CS}$.

DSP I/O cycles differ from microprocessor I/O cycles in the following ways:

- When interfaced with a DSP, the output data MSB is available after FS↓. The remaining output data changes on the rising edge of I/O CLK. The input data is sampled on the first four falling edges of I/O CLK after FS↓ and when $\overline{INV\ CLK}$ is high, or the first four rising edges of I/O CLK after FS↓ and when $\overline{INV\ CLK}$ is low. This operation is inverted when interfaced with a microprocessor.
- A new DSP I/O cycle is started on the rising edge of I/O CLK after the rising edge of FS. The internal state machine is reset on each falling edge of I/O CLK when FS is high. This operation is opposite when interfaced with a microprocessor.
- The TLV1544/1548 supports a 16-clock cycle when interfaced with a DSP. The output data is padded with six trailing zeros when it is operated in DSP mode.

Table 2. TLV1544/TLV1548 Serial Interface Modes

I/O	INTERFACE MODE	
	MICROPROCESSOR ACTION	DSP ACTION
$\overline{CS}$↓	Initializes counter	Samples state of FS
$\overline{CS}$↑	Resets state machine and disable I/O	Disables I/O
FS	Connects to V_{CC}	Connects to DSP FSX output Initializes the state machine at each CLK↓ after FS↑ Starts a new cycle at each CLK↑ following the initialization (initializes the counter)
I/O CLK	Starts sampling of the analog input started at fourth I/O CLK↑ Conversion started at tenth I/O CLK↑	Starts sampling of the analog input at fourth I/O CLK↓ Starts sampling of the analog input at tenth I/O CLK↓
DATA IN	Samples input data on I/O CLK↑ ($\overline{INV\ CLK}$ high) Samples input data on I/O CLK↓ (INV CLK low)	Samples input data at I/O CLK↓ ($\overline{INV\ CLK}$ high) Samples input data at I/O CLK↑ (INV CLK low)
DATA OUT	Makes MSB available on $\overline{CS}$↓ Changes remaining data on I/O CLK↓	Makes MSB available FS↓ Changes remaining data at each following I/O CLK↑ after FS↓

input data bits

DATA IN is internally connected to a 4-bit serial input data register. The input data selects a different mode or selects different analog input channels. The host provides the data word with the MSB first. Each data bit clocks in on the edge (rising or falling depending on the status of $\overline{\text{INV CLK}}$ and FS) of the I/O CLK sequence. The input clock can be inverted by grounding $\overline{\text{INV CLK}}$ (see Table 3 for the list of software programmed operations set by the input data).

Table 3. TLV1544/1548 Software-Programmed Operation Modes

FUNCTION SELECT	INPUT DATA BYTE A3 – A0		COMMENT
	BINARY	HEX	
Analog channel A0 for TLV1548 selected	0000b	0h	Channel 0 for TLV1544
Analog channel A1 for TLV1548 selected	0001b	1h	
Analog channel A2 for TLV1548 selected	0010b	2h	Channel 1 for TLV1544
Analog channel A3 for TLV1548 selected	0011b	3h	
Analog channel A4 for TLV1548 selected	0100b	4h	Channel 2 for TLV1544
Analog channel A5 for TLV1548 selected	0101b	5h	
Analog channel A6 for TLV1548 selected	0110b	6h	Channel 3 for TLV1544
Analog channel A7 for TLV1548 selected	0111b	7h	
Software power down set	1000b	8h	No conversion result (cleared by any access)
Fast conversion rate (10 µs) set	1001b	9h	No conversion result (cleared by setting to fast)
Slow conversion rate (40 µs) set	1010b	Ah	No conversion result (cleared by setting to slow)
Self-test voltage ($V_{ref+} - V_{ref-}$)/2 selected	1011b	Bh	Output result = 200h
Self-test voltage V_{ref-} selected	1100b	Ch	Output result = 000h
Self-test voltage V_{ref+} selected	1101b	Dh	Output result = 3FFh
Reserved	1110b	Eh	No conversion result
Reserved	1111b	Fh	No conversion result

analog inputs and internal test voltages

The eight analog inputs and the three internal test inputs are selected by the 11-channel multiplexer according to the input data bit as shown in Table 3. The input multiplexer is a break-before-make type to reduce input-to-input noise injection resulting from channel switching.

The device can be operated in two distinct sampling modes: normal sampling mode (fixed sampling time) and extended sampling mode (flexible sampling time). When $\overline{\text{CSTART}}$ is held high, the device is operated in normal sampling mode. When operated in normal sampling mode, sampling of the analog input starts on the rising edge of the fourth I/O CLK pulse in the microprocessor interface mode (and on the fourth falling edge of I/O CLK in the DSP interface mode). Sampling continues for 6 I/O CLK periods. The sample is held on the falling edge of the tenth I/O CLK pulse in the microprocessor interface mode. The sample is held on the falling edge of the tenth I/O CLK pulse in the DSP interface mode.The three test inputs are applied to the multiplexer, then sampled and converted in the same manner as the external analog inputs.

converter

The CMOS threshold detector in the successive-approximation conversion system determines the value of each bit by examining the charge on a series of binary-weighted capacitors (see Figure 1). In the first phase of the conversion process, the analog input is sampled by closing the S_C switch and all S_T switches simultaneously. This action charges all of the capacitors to the input voltage.

In the next phase of the conversion process, all S_T and S_C switches are opened and the threshold detector begins identifying bits by identifying the charge (voltage) on each capacitor relative to the reference (REF –) voltage. In the switching sequence, ten capacitors are examined separately until all ten bits are identified and then the charge-convert sequence is repeated. In the first step of the conversion phase, the threshold detector looks at the first capacitor (weight = 512). Node 512 of this capacitor is switched to the REF+ voltage, and the equivalent nodes of all the other capacitors on the ladder are switched to REF –. If the voltage at the summing node is greater than the trip point of the threshold detector (approximately one-half V_{CC}), a bit 0 is placed in the output register and the 512-weight capacitor is switched to REF –. If the voltage at the summing node is less than the trip point of the threshold detector, a bit 1 is placed in the register and the 512-weight capacitor remains connected to REF + through the remainder of the successive-approximation process. The process is repeated for the 256-weight capacitor, the 128-weight capacitor, and so forth down the line until all bits are counted.

With each step of the successive-approximation process, the initial charge is redistributed among the capacitors. The conversion process relies on charge redistribution to count and weigh the bits from MSB to LSB.

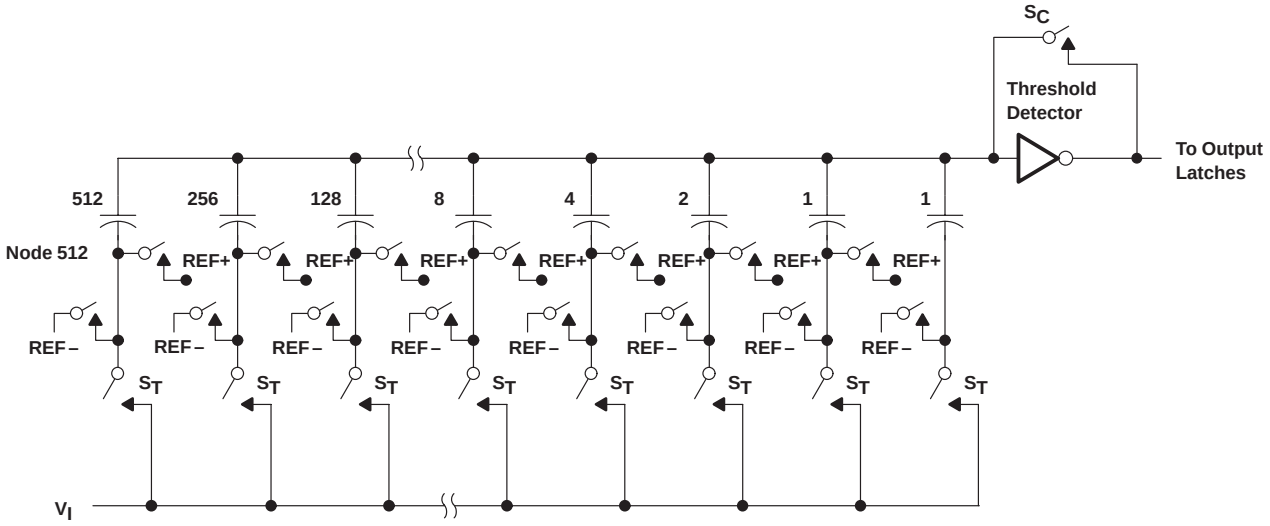

Figure 1. Simplified Model of the Successive-Approximation System

extended sampling, asynchronous start of sampling: $\overline{\text{CSTART}}$ operation

The extended sampling mode of operation programs the acquisition time (t_{ACQ}) of the sample-and-hold circuit. This allows the analog inputs of the device to be directly interfaced to a wide range of input source impedances. The extended sampling mode consumes higher power depending on the duration of the sampling period chosen.

$\overline{\text{CSTART}}$ controls the sampling period and starts the conversion. The falling edge of $\overline{\text{CSTART}}$ initiates the sampling period of a preset channel. The low time of $\overline{\text{CSTART}}$ controls the acquisition time of the input sample-and-hold circuit. The sample is held on the rising edge of $\overline{\text{CSTART}}$. Asserting $\overline{\text{CSTART}}$ causes the converter to perform a new sample of the signal on the preset valid MUX channel (one of the eight) and discard the current conversion result ready for output. Sampling continues as long as $\overline{\text{CSTART}}$ is active (negative). The rising edge of $\overline{\text{CSTART}}$ ends the sampling cycle. The conversion cycle starts two internal system clocks after the rising edge of $\overline{\text{CSTART}}$.

Once the conversion is complete, the processor can initiate a normal I/O cycle to read the conversion result and set the MUX address for the next conversion. Since the internal flag AsyncFlag is set high, this flag setting indicates the cycle is an output cycle, so no conversion is performed during the cycle. The internal state machine tests the AsyncFlag on the falling edge of $\overline{\text{CS}}$. AsyncFlag is set high at the rising edge of $\overline{\text{CSTART}}$, and it is reset low at the rising edge of each $\overline{\text{CS}}$. A conversion cycle follows a sampling cycle only if AsyncFlag is tested as low at the falling edge of $\overline{\text{CS}}$. As shown in Figure 2, an asynchronous I/O cycle can be removed by two consecutive normal I/O cycles.

Table 4. TLV1544/1548 Hardware Configuration for Different Operating Modes

OPERATING MODES	$\overline{\text{CS}}$	$\overline{\text{CSTART}}$	AsyncFlag at $\overline{\text{CS}}\downarrow$	ACTION
Normal sampling	Low	High	Low	Fixed 6 I/O CLK sampling, synchronous conversion follows
Normal I/O (read out only)	Low	High	High	No sampling, no conversion
Extended sampling	High	Low	N/A	Flexible sampling period controlled by $\overline{\text{CSTART}}$, asynchronous conversion follows

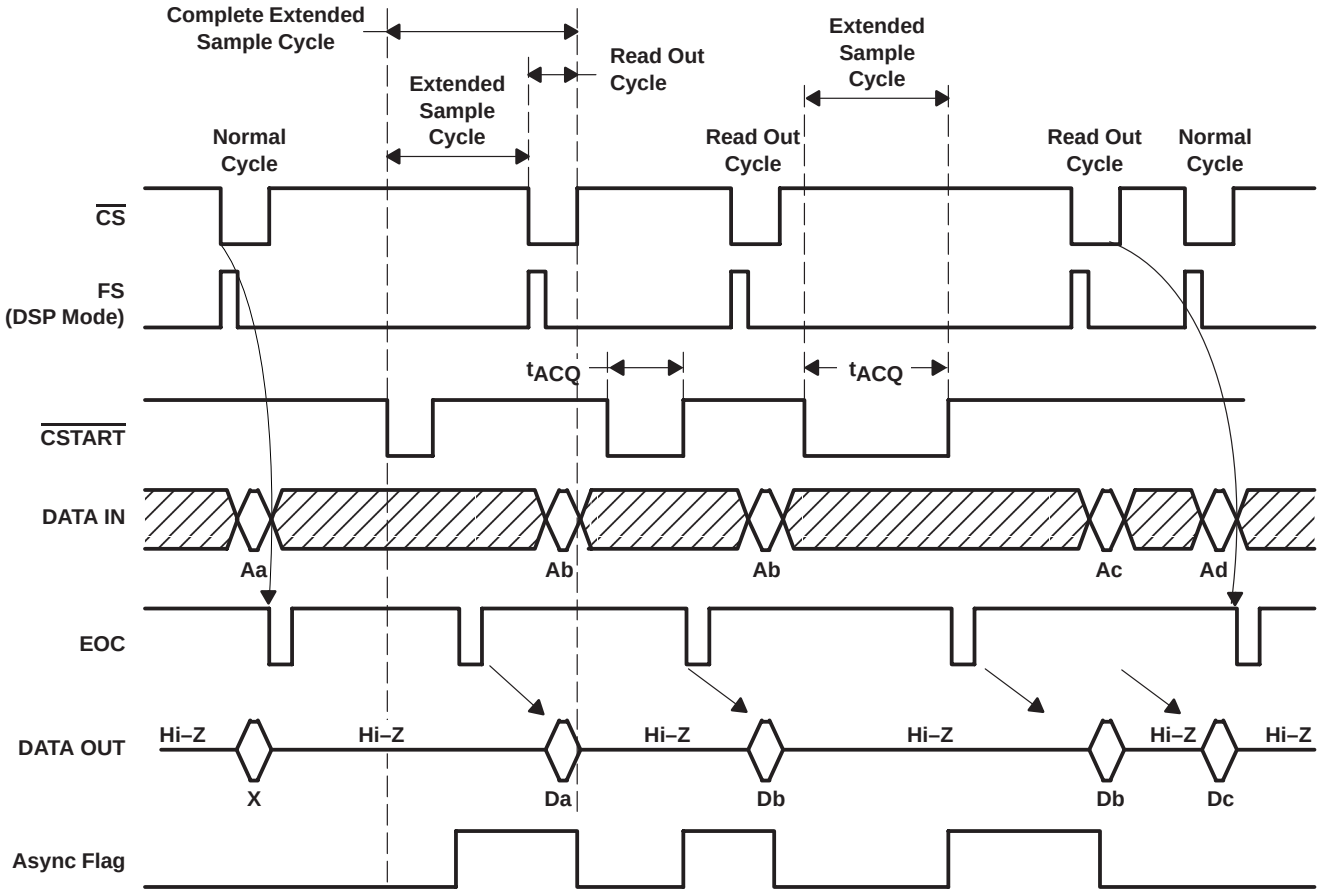

NOTES: A. Aa = Address for input channel a.
B. Da = Conversion result from channel a.

Figure 2. Extended Sampling Operation

reference voltage inputs

There are two reference inputs used with the TLV1544/TLV1548, REF+ and REF–. These voltage values establish the upper and lower limits of the analog inputs to produce a full-scale and zero-scale reading respectively. The values of REF+, REF–, and the analog input should not exceed the positive supply or be lower than GND consistent with the specified absolute maximum ratings. The digital output is at full scale when the input signal is equal to or higher than REF+ and is at zero when the input signal is equal to or lower than REF–.

programmable conversion rate

The TLV1544/TLV1548 offers two conversion rates to maximize battery life when high-speed operation is not necessary. The conversion rate is programmable. Once the conversion rate has been selected, it takes effect immediately in the same cycle and stays at the same rate until the other rate is chosen. The conversion rate should be set at power up. Activation and deactivation of the power-down state (digital logic active) has no effect on the preset conversion rate.

Table 5. Conversion Rate and Power Consumption Selection

CONVERSION RATE	CONVERSION TIME, t_{conv}	AVAILABLE V_{CC} RANGE	INPUT DATA	TYPICAL SUPPLY CURRENT, I_{CC}		
				OPERATING		POWER DOWN
Fast conversion speed	7 µs typ	5.5 V to 3.3 V	9h	0.6 mA typ	1.5 mA max	1 µA typ
Slow conversion speed	15 µs typ	5.5 V to 2.7 V	Ah	0.4 mA typ	1 mA max	1 µA typ

programmable power-down state

The device is put into the power-down state by writing 8h to DATA IN. The power-up state is restored during the next active access by pulling $\overline{CS}$ low. The conversion rate selected before the device is put into the power-down state is not affected by the power-down mode. Power-down can be used to achieve even lower power consumption. This is because the sustaining power (when not converting) is only 1.3 mA maximum and standby power is only 1 µA maximum. (By averaging out the power consumption can be much lower than the 1 mA peak when the conversion throughput is lower.)

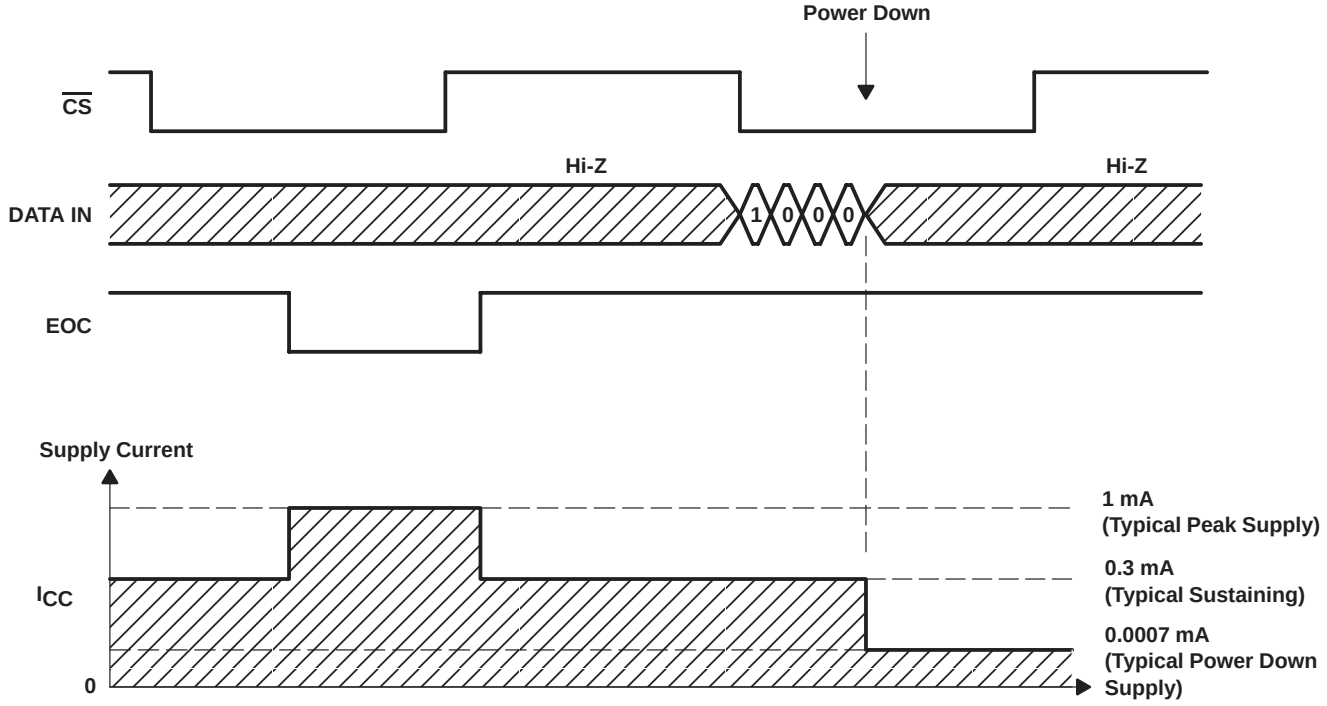

Figure 3. Typical Supply Current During Conversion/Power Down

power up and initialization

After power up, if operating in DSP mode, $\overline{CS}$ and FS must be taken from high to low to begin an I/O cycle. EOC is initially high, and the input data register is set to all zeroes. The content of the output data register is random, and the first conversion result should be ignored. For initialization during operation, $\overline{CS}$ is taken high and returned low to begin the next I/O cycle. The first conversion after the device has returned from the power-down state can be invalid and should be disregarded.

When power is first applied to the device, the conversion rate must be programmed, and the internal Async Flag must be taken low once. The rising edge of $\overline{CS}$ of the same cycle then takes Async Flag low.

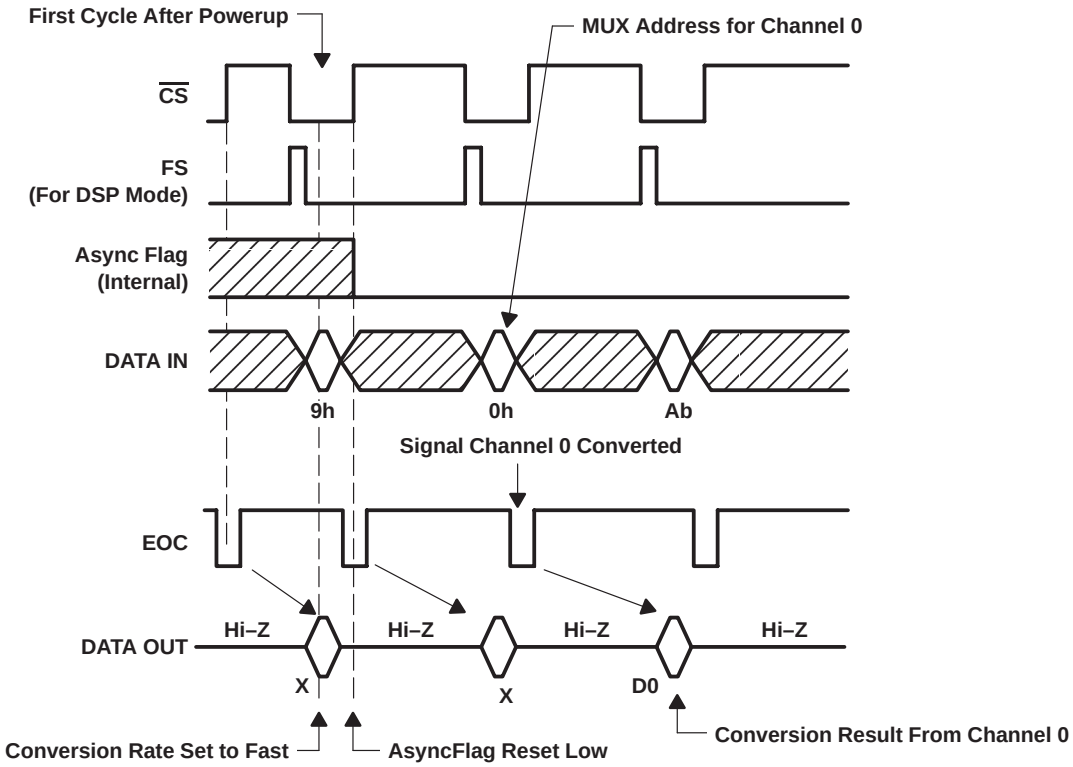

Figure 4. Power Up Initialization

input clock inversion – $\overline{\text{INV CLK}}$

The input data register uses I/O CLK as the source of the sampling clock. This clock can be inverted to provide more setup time. $\overline{\text{INV CLK}}$ can invert the clock. When $\overline{\text{INV CLK}}$ is grounded, the input clock for the input data register is inverted. This allows an additional one-half I/O CLK period for the input data setup time. This is useful for some serial interfaces. When the input sampling clock is inverted, the output data changes at the same time that the input data is sampled.

Table 6. Function of $\overline{\text{INV CLK}}$

CONDITION CLOCK		I/O CLK ACTIVE EDGE	
$\overline{\text{INV CLK}}$	FS at $\overline{\text{CS}}$↓	OUTPUT DATA CHANGES ON	INPUT DATA SAMPLED ON
High	High (MP† mode)	↓	↑
High	Low (DSP‡ mode)	↑	↓
Low	High (MP† mode)	↓	↓
Low	Low (DSP‡ mode)	↑	↑

† MP = microprocessor mode
‡ DSP = digital signal processor mode

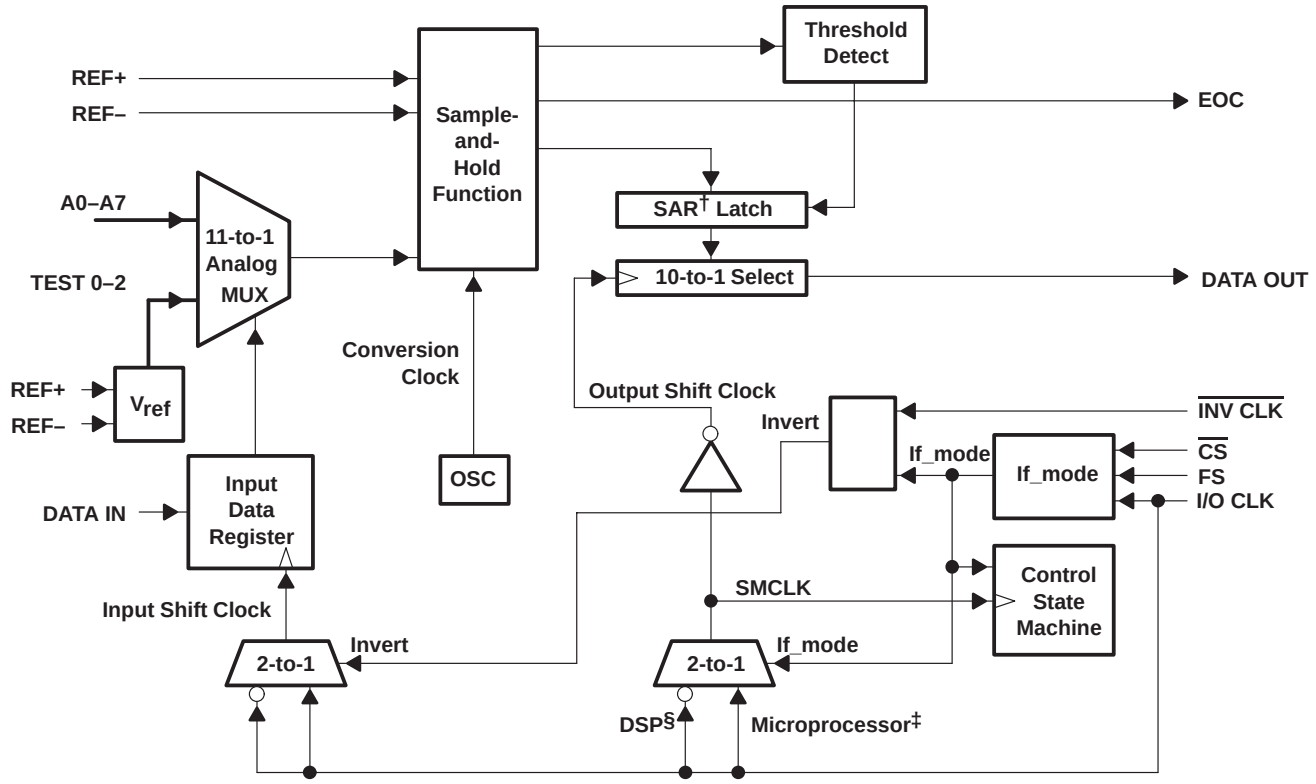

† Successive approximation register
‡ If_mode = 1, microprocessor interface mode
§ If_mode = 0, DSP interface mode

Figure 5. Clock Scheme

absolute maximum ratings over operating free-air temperature range (unless otherwise noted)†

Supply voltage range, V_{CC} (see Note 1)		–0.5 V to 6.5 V
Input voltage range, V_I (any input)		–0.3 V to V_{CC} + 0.3 V
Output voltage range, V_O		–0.3 V to V_{CC} + 0.3 V
Positive reference voltage, V_{ref+}		V_{CC} + 0.1 V
Negative reference voltage, V_{ref-}		–0.1 V
Peak input current, I_I (any input)		±20 mA
Peak total input current (all inputs)		–30 mA
Operating free-air temperature range, T_A:	TLV1544C, TLV1548C	0°C to 70°C
	TLV1544I, TLV1548I	–40°C to 85°C
	TLV1548M	–55°C to 125°C
Storage temperature range, T_{stg}		–65°C to 150°C
Lead temperature 1,6 mm (1/16 inch) from the case for 10 seconds		260°C

† Stresses beyond those listed under “absolute maximum ratings” may cause permanent damage to the device. These are stress ratings only, and functional operation of the device at these or any other conditions beyond those indicated under “recommended operating conditions” is not implied. Exposure to absolute-maximum-rated conditions for extended periods may affect device reliability.

NOTE 1: All voltage values are with respect to GND with REF– and GND wired together (unless otherwise noted).

recommended operating conditions

		MIN	NOM	MAX	UNIT
Supply voltage, V_{CC}		2.7		5.5	V
Positive reference voltage, V_{ref+} (see Note 2)			V_{CC}		V
Negative reference voltage, V_{ref-} (see Note 2)			0		V
Differential reference voltage, $V_{ref+} - V_{ref-}$ (see Note 2)		2.5	V_{CC}	V_{CC} +0.2	V
Analog input voltage, $V_{I\ (analog)}$ (see Note 2)		0		V_{CC}	V
High-level control input voltage, V_{IH}		2.1			V
Low-level control input voltage, V_{IL}				0.6	V
Setup time, input data bits valid before I/O CLK↑↓, $t_{su(A)}$ (see Figure 9)		100			ns
Hold time, input data bits valid after I/O CLK↑↓, $t_{h(A)}$ (see Figure 9)		5	30		ns
Setup time, $\overline{CS}$↓ to I/O CLK↑, $t_{su(CS)}$	See Figure 10	5	30		ns
Hold time, I/O CLK↓ to $\overline{CS}$↑, $t_{h(CS)}$	See Figure 10	65			ns
Pulse duration, FS high, $t_{wH(FS)}$	See Figure 12	1			I/O CLK periods
Pulse duration, $\overline{CSTART}$, $t_{w(CSTART)}$	Source impedance ≤ 1 kΩ, V_{CC} = 5.5 V, See Figure 14	0.84			µs
Setup time, $\overline{CS}$↑ to $\overline{CSTART}$↓, $t_{su(CSTART)}$	See Figure 14	10			ns
Clock frequency at I/O CLK, f_{CLK}	V_{CC} = 5.5 V	0.1	6	10	MHz
	V_{CC} = 2.7 V	0.1	2	2.81	
Pulse duration, I/O CLK high, $t_{wH(I/O)}$	V_{CC} = 5.5 V	50			ns
	V_{CC} = 2.7 V	100			
Pulse duration, I/O CLK low, $t_{wL(I/O)}$	V_{CC} = 5.5 V	50			ns
	V_{CC} = 2.7 V	100			
Transition time, I/O CLK, $t_{t(I/O)}$ (see Figure 11 and Note 4)				1	µs
Transition time, DATA IN, $t_{t(DATA\ IN)}$ (see Figure 9)				10	µs
Transition time, $\overline{CS}$, $t_{t(CS)}$ (see Figure 10)				10	µs
Transition time, FS, $t_{t(FS)}$ (see Figure 13)				10	µs
Transition time, $\overline{CSTART}$, $t_{t(CSTART)}$ (see Figure 14)				10	µs
Operating free-air temperature, T_A	TLV1544C, TLV1548C	0		70	°C
	TLV1544I, TLV1548I	–40		85	
	TLV1548M	–55		125	
Junction temperature, T_J	TLV1544C, TLV1548C			115	°C
	TLV1544I, TLV1548I			115	
	TLV1548M			150	

NOTES:
2. Analog input voltages greater than the voltage applied to REF+ convert as all ones (111111111111), while input voltages less than the voltage applied to REF– convert as all zeros (000000000000). The device is functional with reference ($V_{ref+} - V_{ref-}$) down to 1 V; however, the electrical specifications are no longer applicable.
3. To minimize errors caused by noise at $\overline{CS}$↓, the internal circuitry waits for a setup time after $\overline{CS}$↓ before responding to control input signals. No attempt should be made to clock in an input dat until the minimum $\overline{CS}$ setup time has elapsed.
4. This is the time required for the I/O CLK signal to fall from V_{IH}max to V_{IL}min or to rise from V_{IL}max to V_{IH}min. In the vicinity of normal room temperature, the devices function with an input clock transition time as slow as 1 µs for remote data-acquisition applications where the sensor and the A/D converter are placed several feet away from the controlling microprocessor.

electrical characteristics over recommended operating free-air temperature range, $V_{CC} = V_{ref+}$ = 2.7 V to 5.5 V, I/O CLK frequency = 2.2 MHz (unless otherwise noted)

PARAMETER		TEST CONDITIONS		MIN	TYP†	MAX	UNIT
V_{OH}	High-level output voltage	V_{CC} = 5.5 V,	I_{OH} = –0.2 mA	2.4			V
		V_{CC} = 2.7 V,	I_{OH} = –20 µA	$V_{CC–0.1}$			
V_{OL}	Low-level output voltage	V_{CC} = 5.5 V,	I_{OL} = 0.8 mA			0.4	V
		V_{CC} = 2.7 V,	I_{OL} = 20 µA			0.1	
I_{OZ}	High-impedance output current	$V_O = V_{CC}$,	$\overline{CS} = V_{CC}$		1	2.5	µA
		V_O = 0,	$\overline{CS} = V_{CC}$		–1	–2.5	
I_{IH}	High-level input current	$V_I = V_{CC}$			0.005	2.5	µA
I_{IL}	Low-level input current	V_I = 0			–0.005	2.5	µA
I_{CC}	Operating supply current	Conversion speed = fast, For all digital inputs, $0 \le V_I \le 0.3$ V or $V_I \ge V_{CC} – 0.3$ V	V_{CC} = 3.3 V to 5.5 V		0.6	1.5	mA
		Conversion speed = slow, For all digital inputs, $0 \le V_I \le 0.3$ V or $V_I \ge V_{CC} – 0.3$ V	V_{CC} = 3.3 V to 5.5 V		0.4	1	
			V_{CC} = 2.7 V to 3.3 V		0.35	0.75	
$I_{CC(ES)}$	Extended sampling mode operating current	V_{CC} = 3.3 V to 5.5 V			1.5		mA
		V_{CC} = 2.7 V to 3.3 V			1		mA
$I_{CC(ST)}$	Sustaining supply current	Conversion speed = slow, For all digital inputs, $0 \le V_I \le 0.3$ V or $V_I \ge V_{CC} – 0.3$ V	V_{CC} = 2.7 V to 3.3 V		0.3		mA
$I_{CC(PD)}$	Power-down supply current	For all digital inputs, $0 \le V_I \le 0.3$ V or $V_I \ge V_{CC} – 0.3$ V			1	25	µA
I_{lkg}	Selected channel leakage current	Selected channel at V_{CC}, unselected channel at 0 V				1	µA
		Selected channel at 0 V, unselected channel at V_{CC}				–1	µA
	Maximum static analog reference current into REF+	$V_{ref+} = V_{CC}$ = 5.5 V,	$V_{ref–}$ = GND			1	µA
C_i ‡	Input capacitance, analog inputs				20	55	pF
	Input capacitance, control inputs				20	15	
Z_i ‡	Input multiplexer on resistance	V_{CC} = 4.5 V				1	kΩ
		V_{CC} = 2.7 V				5	

† All typical values are at V_{CC} = 5 V, T_A = 25°C.
‡ Not production tested.

operating characteristics over recommended operating free-air temperature range, $V_{CC} = V_{ref+}$ = 2.7 V to 5.5 V, I/O CLK frequency = 2.2 MHz (unless otherwise noted)

PARAMETER			TEST CONDITIONS	MIN	TYP†	MAX	UNIT
E_L	Linearity error (see Note 6)				±0.5	±1	LSB
E_D	Differential linearity error		See Note 2		±0.5	±1	LSB
E_O	Offset error (see Note 7)		See Note 2			±1.5	LSB
E_G	Gain error (see Note 7)		See Note 2			±1	LSB
E_T	Total unadjusted error (see Note 8)					±1.75	LSB
	Self-test output code (see Table 3 and Note 9)		DATA IN = 1011		512		
			DATA IN - 1100		0		
			DATA IN = 1101		1023		
t_{conv}	Conversion time	Fast conversion speed	See Figures 15 through 17		7	10	µs
		Slow conversion speed			15	25	µs
t_c	Total cycle time (access, sample, conversion and EOC↑ to $\overline{CS}$↓ delay)	Fast conversion speed	See Figures 15 through 18 and Notes 10, 11, 12			10.1 + 10 I/O CLK	µs
		Slow conversion speed	See Figures 15 through 18 and Notes 10 and 12			40.1 + 10 I/O CLK	µs
t_{acq}	Channel acquisition time (sample)		See Figures 15 through 18 and Note 10			6	I/O CLK periods
t_v	Valid time, DATA OUT remains valid after I/O CLK↓		See Figure 11	50			ns
$t_{d1(FS)}$	Delay time, I/O CLK high to FS high		See Figure 13	5	30	50	ns
$t_{d2(FS)}$	Delay time, I/O CLK high to FS low		See Figure 13	10	30	60	ns
$t_{d(EOC\uparrow - CS\downarrow)}$	Delay time, EOC↑ to CS low		See Figure 14 and Note 5	100			ns
$t_{d(CS\downarrow - FS\uparrow)}$	Delay time, CS↓ to FS↑		See Figures 17 and 18	1		7	I/O CLK periods
$t_{d(I/O\ -CS)}$	Delay time, 10th I/O CLK low to CS low to abort conversion (see Note 13)		See Figure 10			1.1	µs

† All typical values are at T_A = 25°C.

NOTES:
2. Analog input voltages greater than that applied to REF+ convert as all ones (111111111111), while input voltages less than that applied to REF– convert as all zeros (000000000000). The device is functional with reference down to 1 V ($V_{ref+} - V_{ref-}$ 1); however, the electrical specifications are no longer applicable.
5. For all operating modes.
6. Linearity error is the maximum deviation from the best straight line through the A/D transfer characteristics.
7. Zero error is the difference between 0000000000 and the converted output for zero input voltage. Full-scale error is the difference between 1111111111 and the converted output for full-scale input voltage.
8. Total unadjusted error comprises linearity, zero-scale, and full-scale errors.
9. Both the input data and the output codes are expressed in positive logic.
10. I/O CLK period = 1/(I/O CLK frequency) (see Figure 8).
11. For 3.3 V to 5.5 V only
12. For microprocessor mode
13. Any transitions of $\overline{CS}$ are recognized as valid only when the level is maintained for a setup time after the transition.

operating characteristics over recommended operating free-air temperature range, $V_{CC} = V_{ref+}$ = 2.7 V to 5.5 V, I/O CLK frequency = 2.2 MHz (unless otherwise noted) (continued)

PARAMETER		TEST CONDITIONS	MIN	TYP†	MAX	UNIT
$t_{d(I/O-DATA)}$	Delay time, I/O CLK low to DATA OUT valid	See Figure 11			50	ns
$t_{d(I/O-EOC)}$	Delay time, 10th I/O CLK↓ to EOC low	See Figure 12		70	240	ns
t_{PZH}, t_{PZL}	Enable time, $\overline{CS}$ low to DATA OUT valid (MSB driven)	See Figure 8		0.7	1.3	µs
t_{PHZ}, t_{PLZ}	Disable time, $\overline{CS}$ high to DATA OUT invalid (high impedance)	See Figure 8		70	150	ns
$t_{f(EOC)}$	Fall time, EOC	See Figure 12		15	50	ns
$t_{r(bus)}$	Rise time, output data bus at 2.2 MHz I/O CLK	See Figure 11		50	250	ns
$t_{f(bus)}$	Fall time, output data bus at 2.2 MHz I/O CLK	See Figure 11		50	250	ns

† All typical values are at T_A = 25°C.

PARAMETER MEASUREMENT INFORMATION

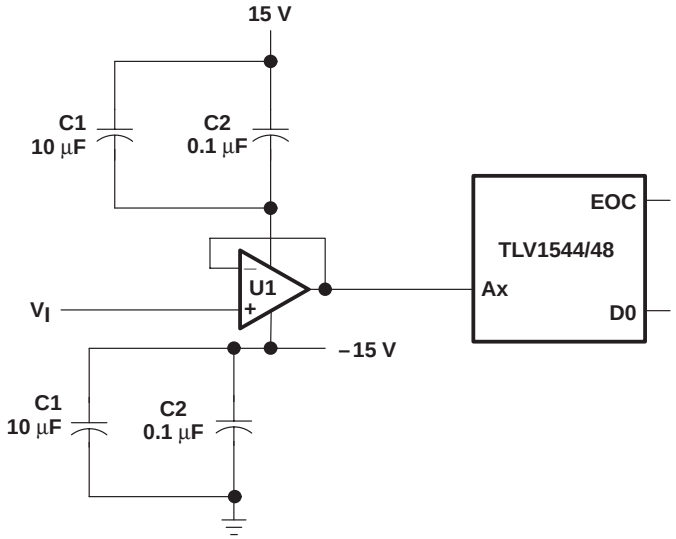

LOCATION	DESCRIPTION	PART NUMBER
U1	OP27	—
C1	10-µF 35-V tantalum capacitor	—
C2	0.1-µF ceramic NPO SMD capacitor	AVX 12105C104KA105 or equivalent

Figure 6. Analog Input Buffer to Analog Inputs

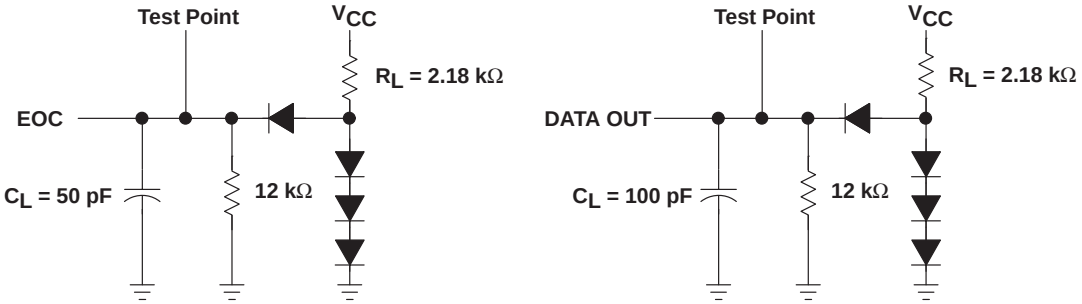

Figure 7. Load Circuits

PARAMETER MEASUREMENT INFORMATION

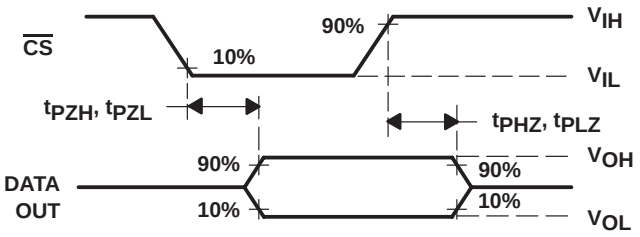

Figure 8. DATA OUT to Hi-Z Voltage Waveforms

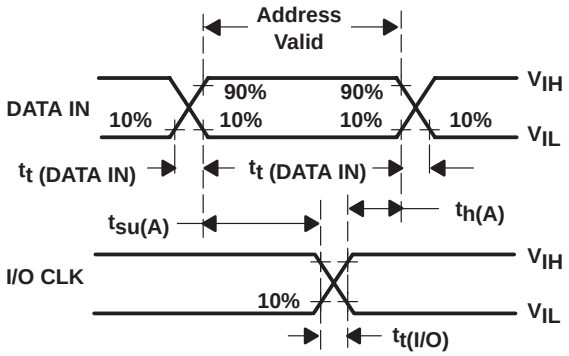

Figure 9. DATA IN Setup Voltage Waveforms

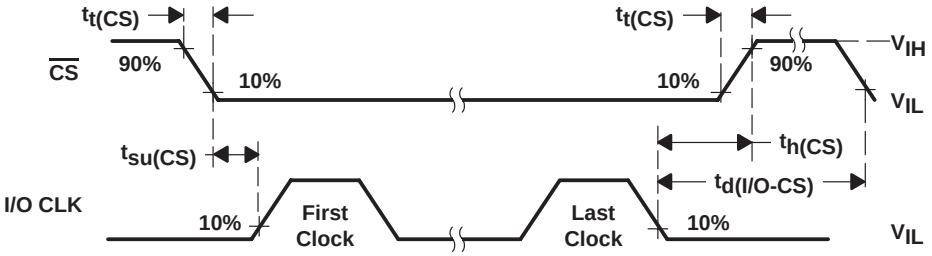

Figure 10. $\overline{CS}$ and I/O CLK Voltage Waveforms

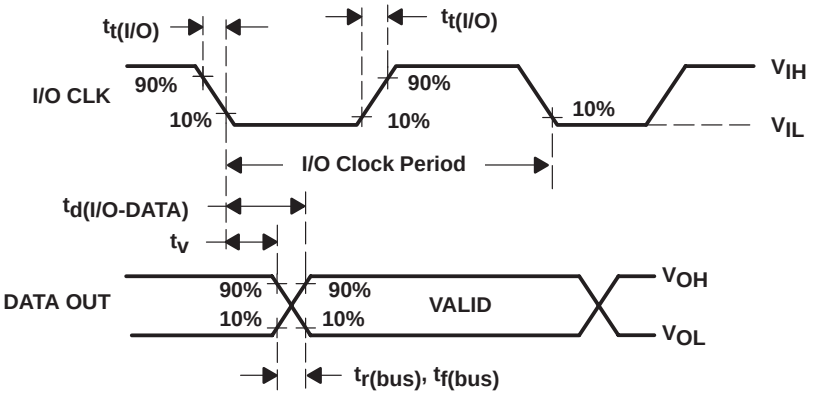

Figure 11. DATA OUT and I/O CLK Voltage Waveforms

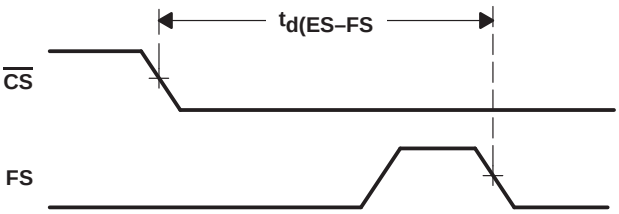

Figure 12. CS Low to FS Low

PARAMETER MEASUREMENT INFORMATION

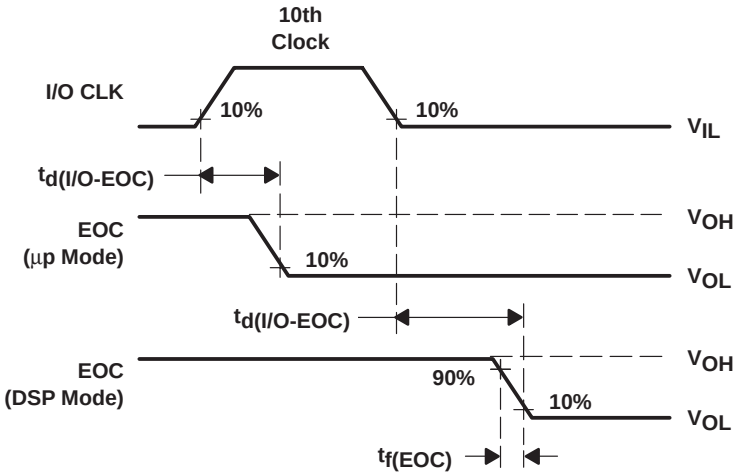

Figure 13. I/O CLK and EOC Voltage Waveforms

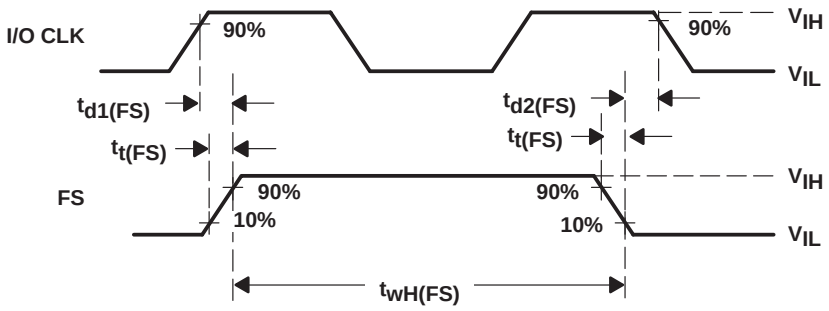

Figure 14. FS and I/O CLK Voltage Waveforms

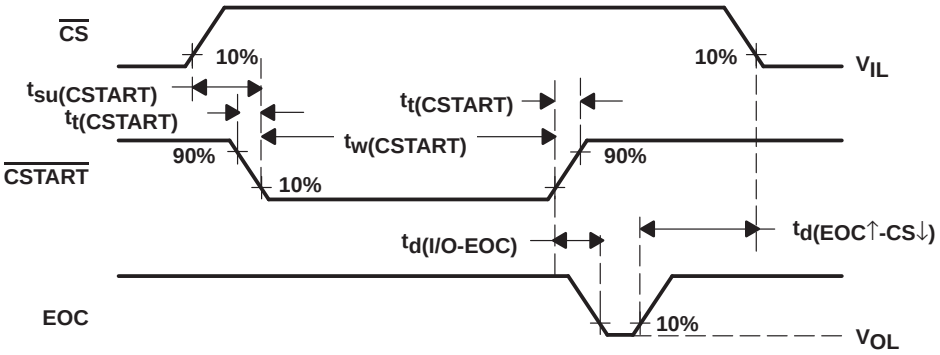

Figure 15. $\overline{\text{CSTART}}$ and $\overline{\text{CS}}$ Waveforms

PARAMETER MEASUREMENT INFORMATION

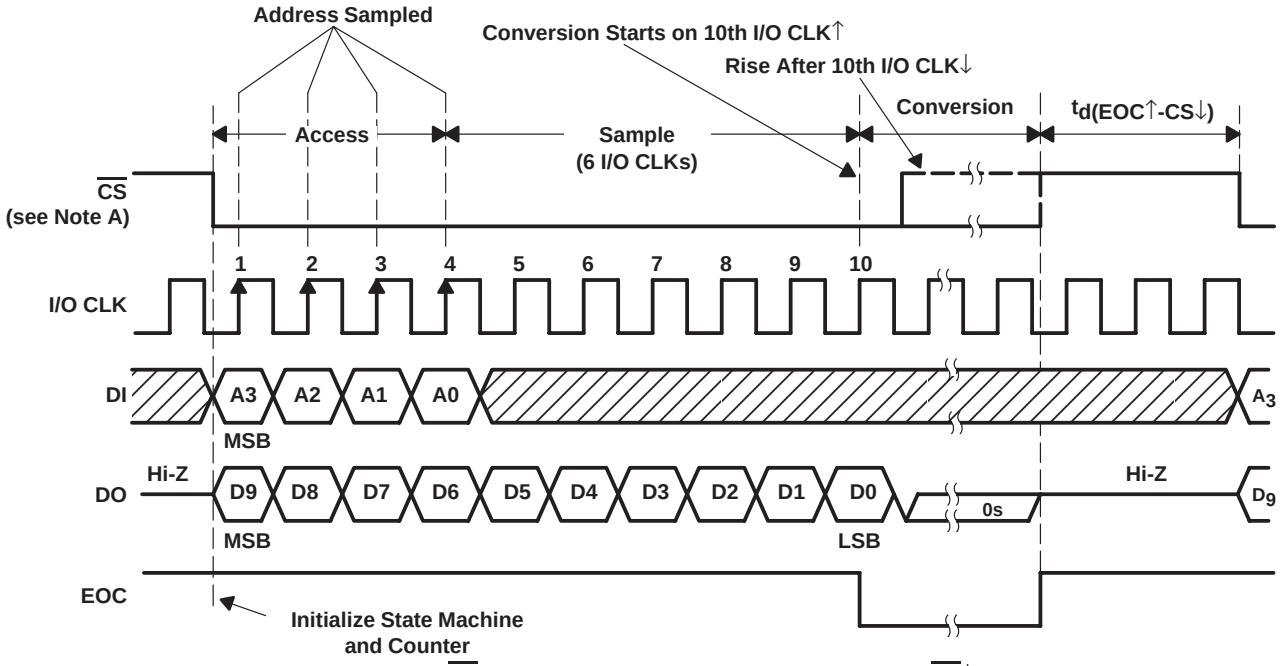

NOTE A: To minimize errors caused by noise at $\overline{CS}$, the internal circuitry waits for a setup time after $\overline{CS}$↓ before responding to control input signals. No attempt should be made to clock in input data until the minimum $\overline{CS}$ setup time elapses.

Figure 16. Microprocessor Interface Timing (Normal Sample Mode, $\overline{INV\ CLK}$ = High)

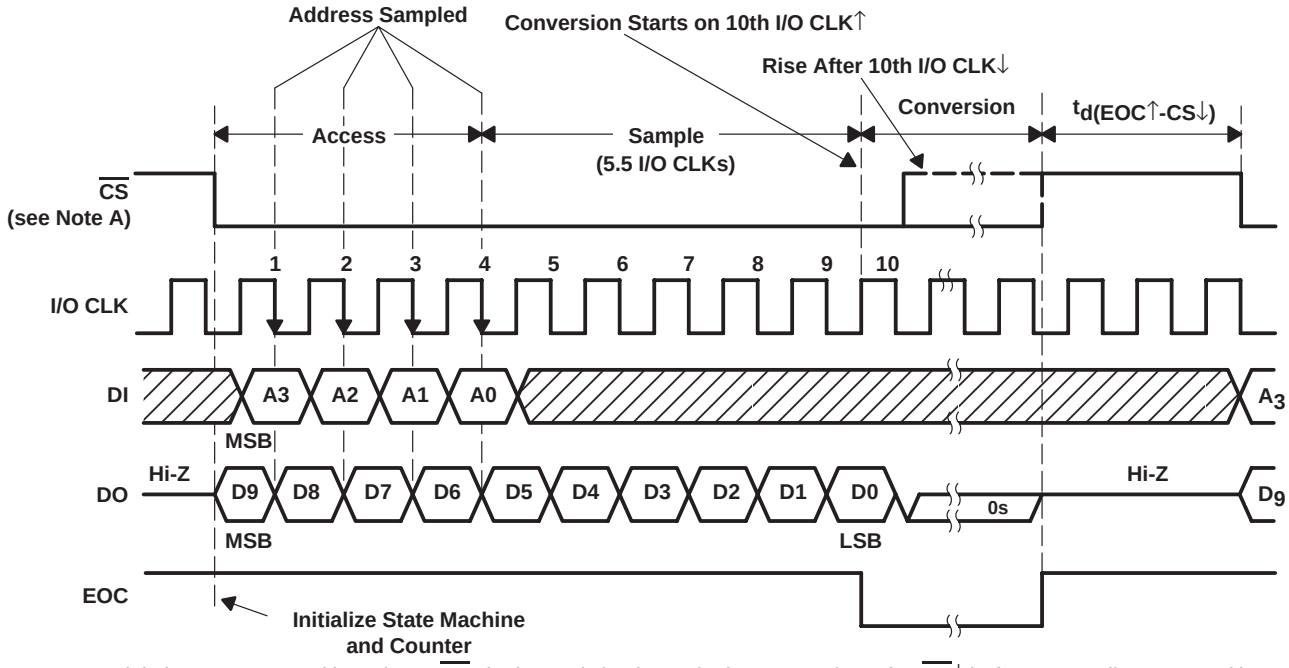

NOTE A: To minimize errors caused by noise at $\overline{CS}$, the internal circuitry waits for a setup time after $\overline{CS}$↓ before responding to control input signals. No attempt should be made to clock in input data until the minimum $\overline{CS}$ setup time has elapsed.

Figure 17. Microprocessor Interface Timing (Normal Sample Mode, $\overline{INV\ CLK}$ = Low)

PARAMETER MEASUREMENT INFORMATION

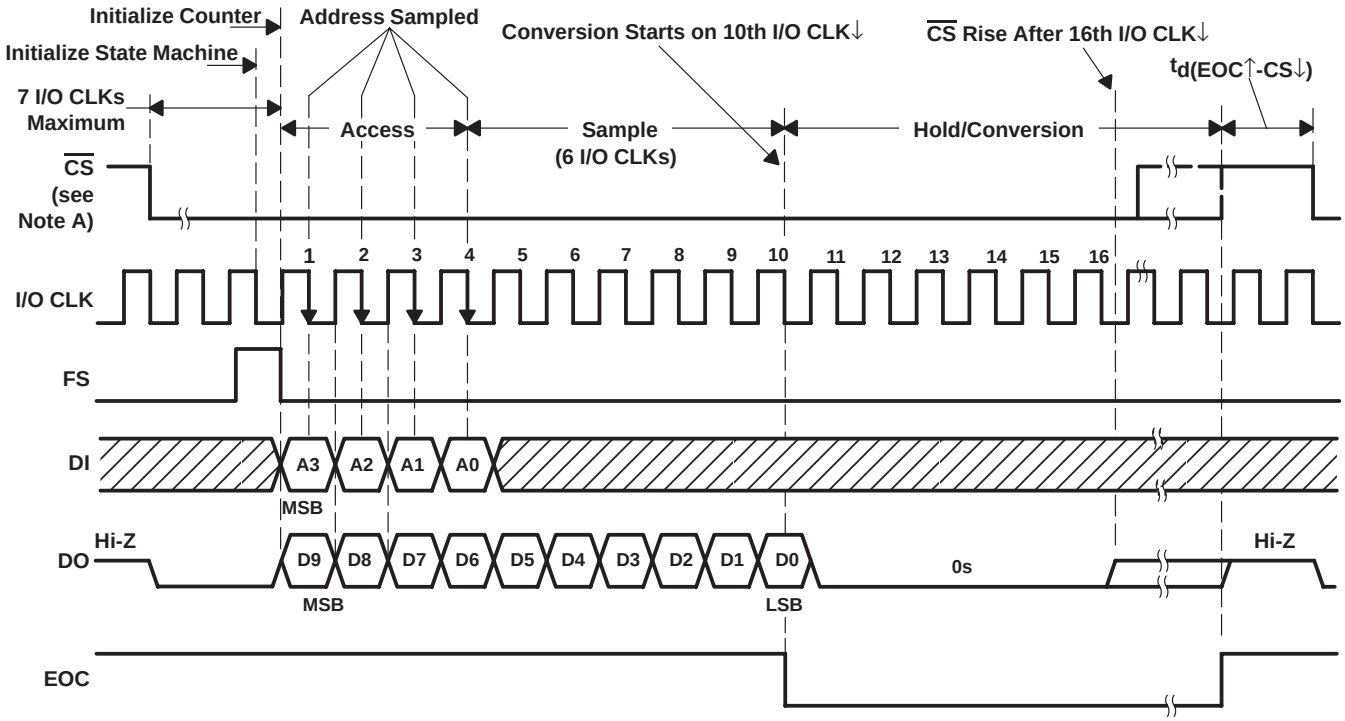

NOTE A: To minimize errors caused by noise at $\overline{CS}$, the internal circuitry waits for a setup time after $\overline{CS}$↓ before responding to control input signals. No attempt should be made to clock in input data until the minimum $\overline{CS}$ setup time elapses.

Figure 18. DSP Interface Timing (16-Clock Transfer, Normal Sample Mode, $\overline{INV\ CLK}$ = High)

PARAMETER MEASUREMENT INFORMATION

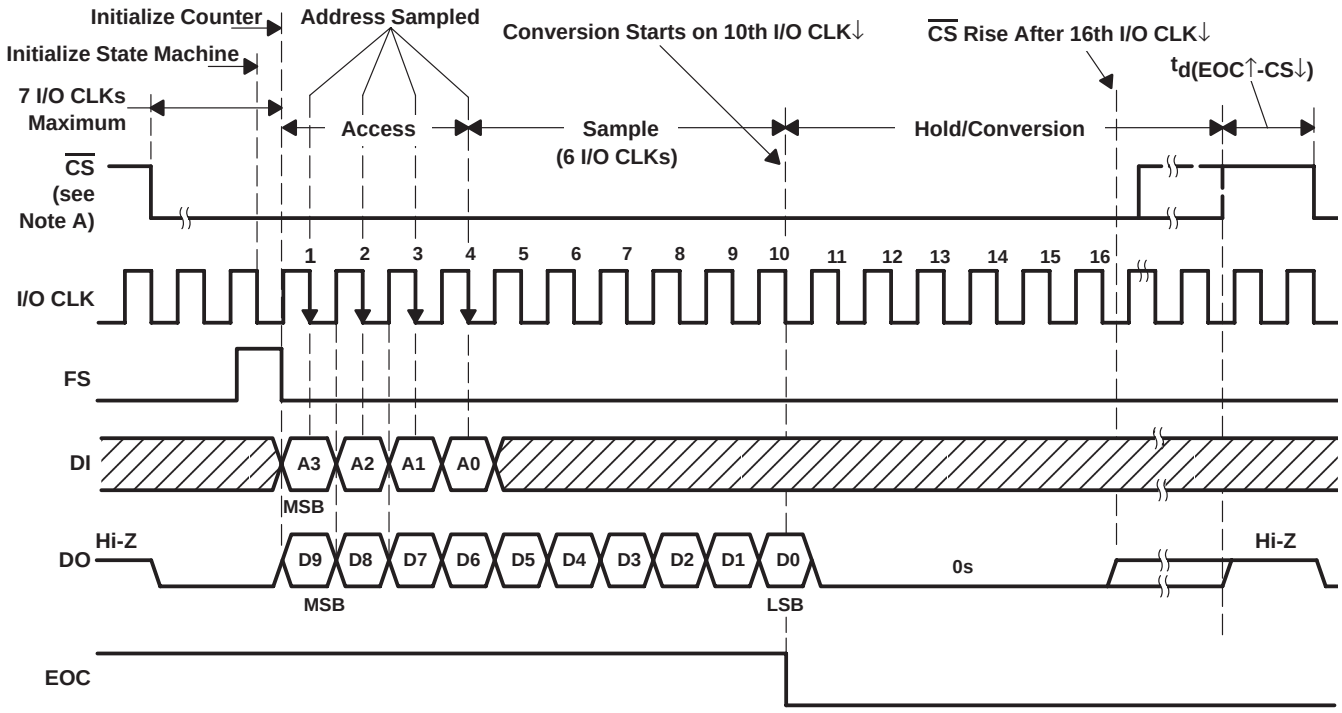

NOTE A: To minimize errors caused by noise at $\overline{CS}$, the internal circuitry waits for a setup time after $\overline{CS}$↓ before responding to control input signals. No attempt should be made to clock in input data until the minimum $\overline{CS}$ setup time elapses.

Figure 19. DSP Interface Timing (16-Clock Transfer, Normal Sample Mode, $\overline{INV\ CLK}$ = Low)

TYPICAL CHARACTERISTICS

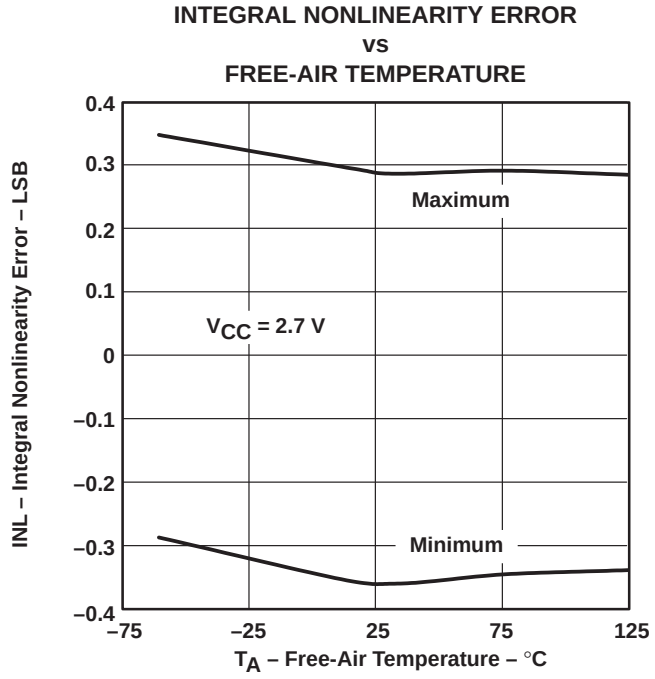

Figure 20

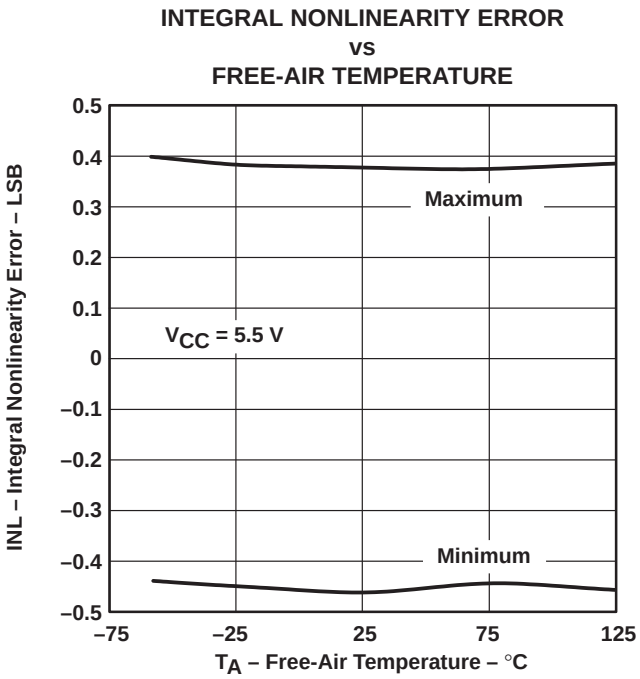

Figure 21

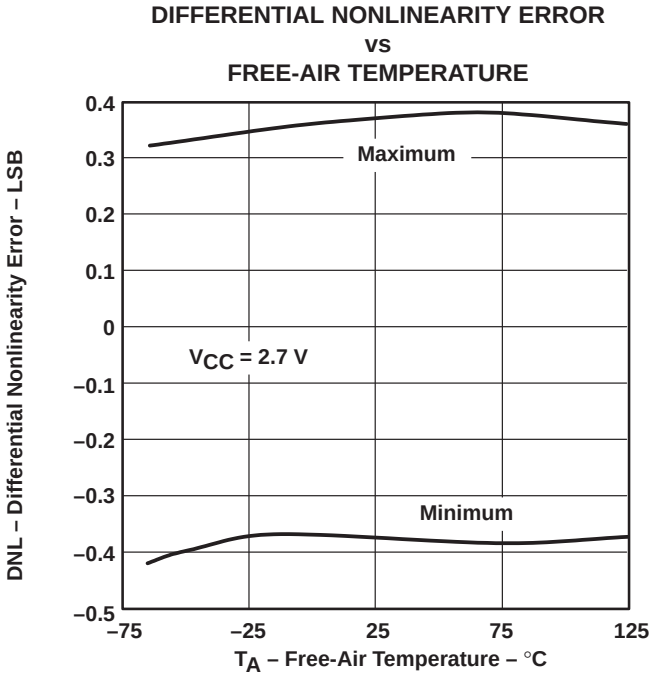

Figure 22

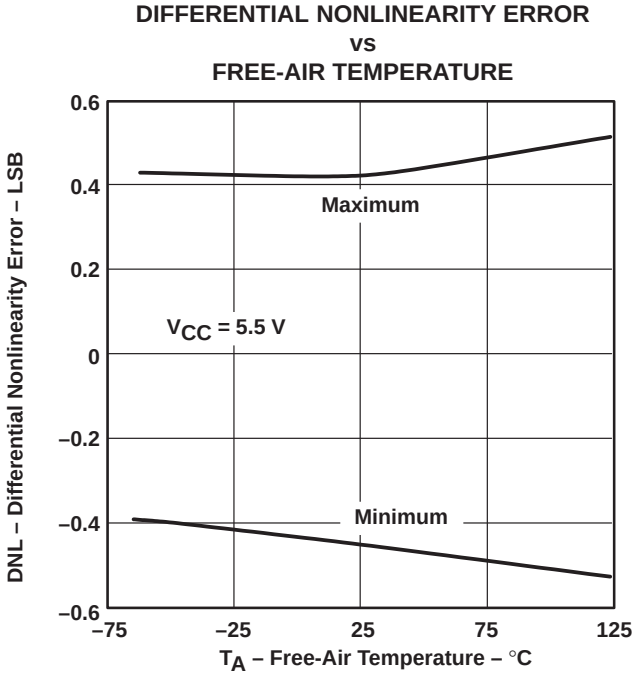

Figure 23

TYPICAL CHARACTERISTICS

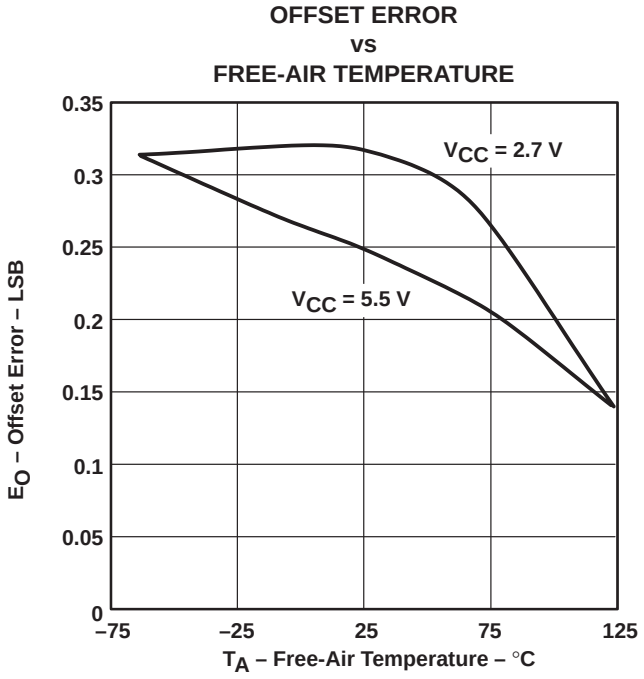

Figure 24

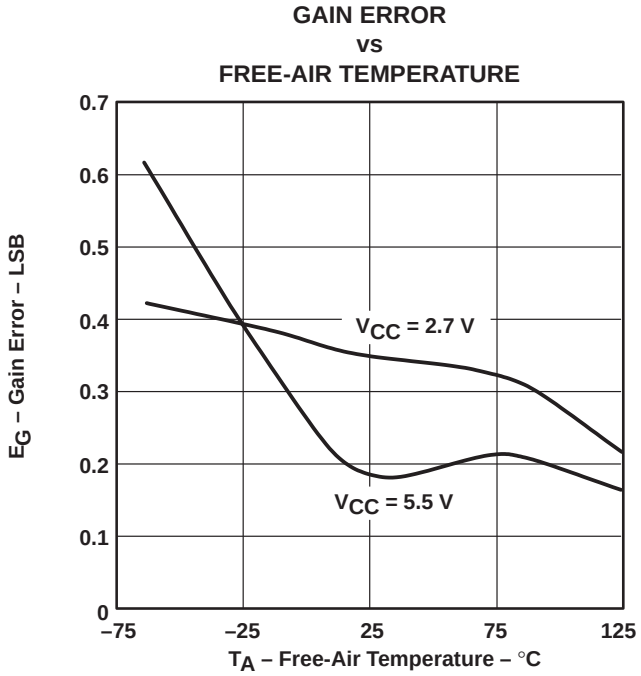

Figure 25

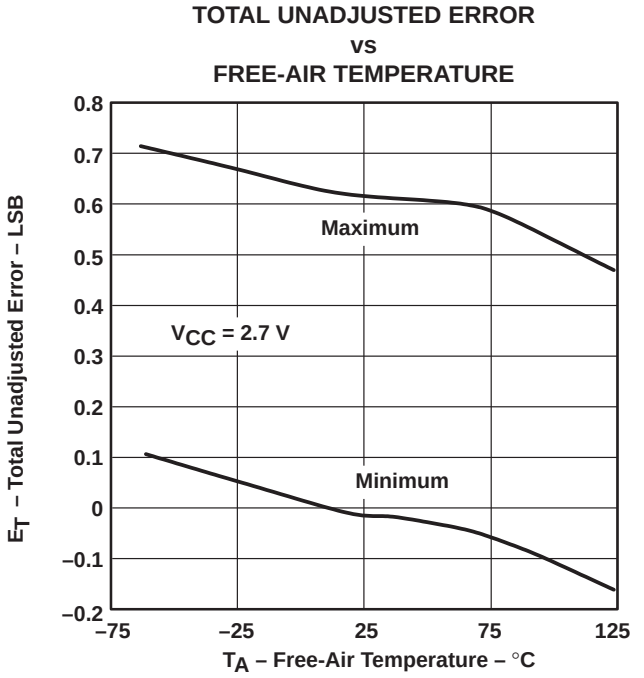

Figure 26

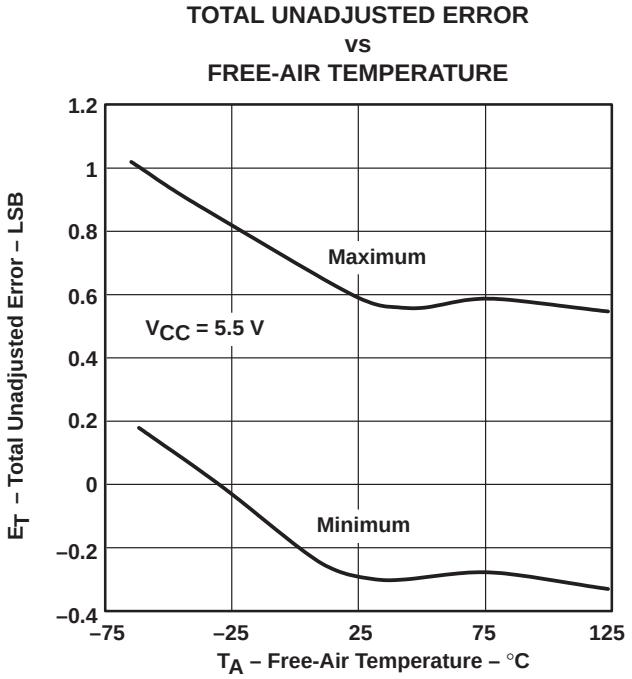

Figure 27

TYPICAL CHARACTERISTICS

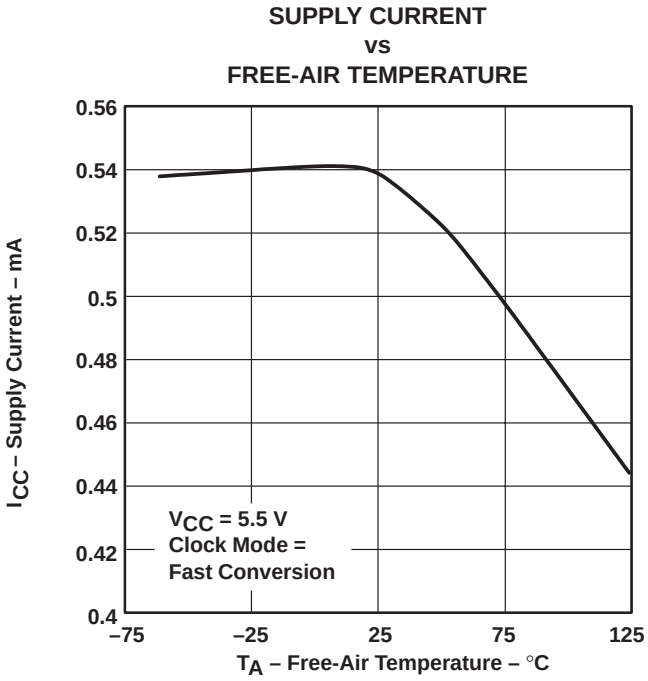

Figure 28

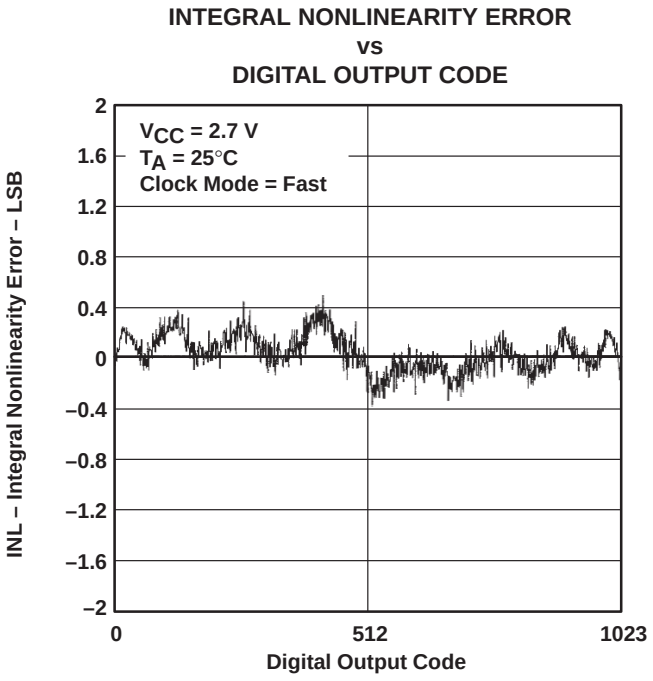

Figure 29

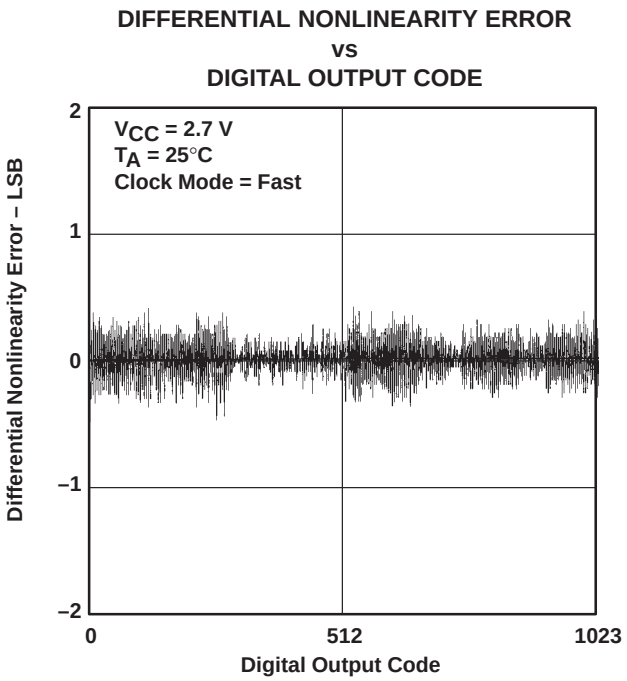

Figure 30

TYPICAL CHARACTERISTICS

INTEGRAL NONLINEARITY ERROR vs DIGITAL OUTPUT CODE

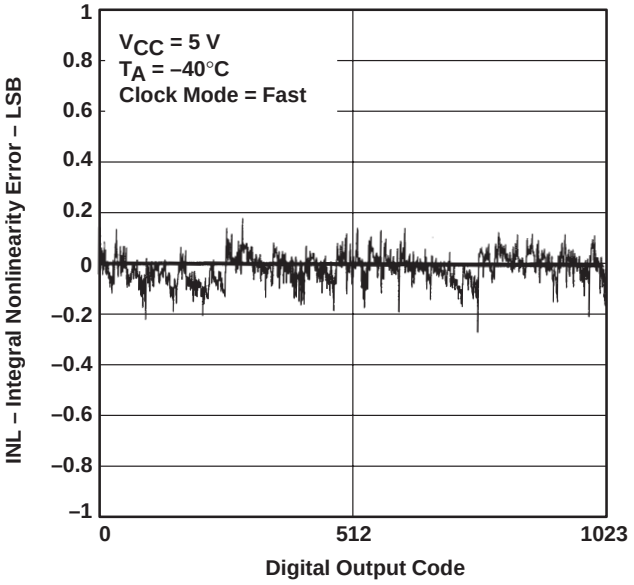

Figure 31

DIFFERENTIAL NONLINEARITY ERROR vs DIGITAL OUTPUT CODE

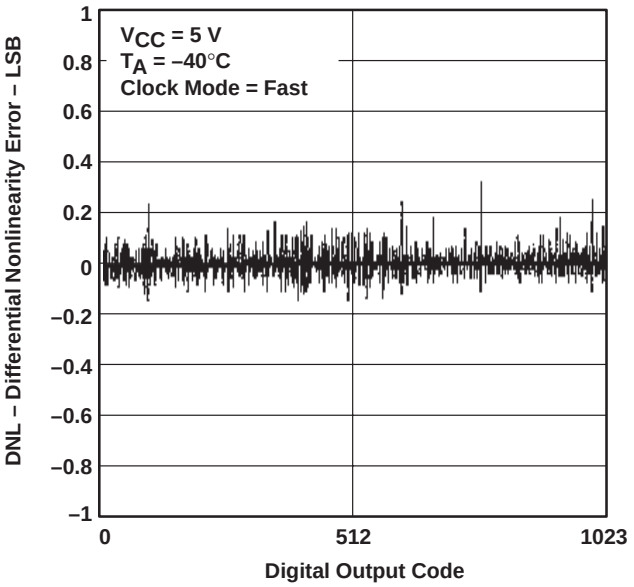

Figure 32

INTEGRAL NONLINEARITY ERROR vs DIGITAL OUTPUT CODE

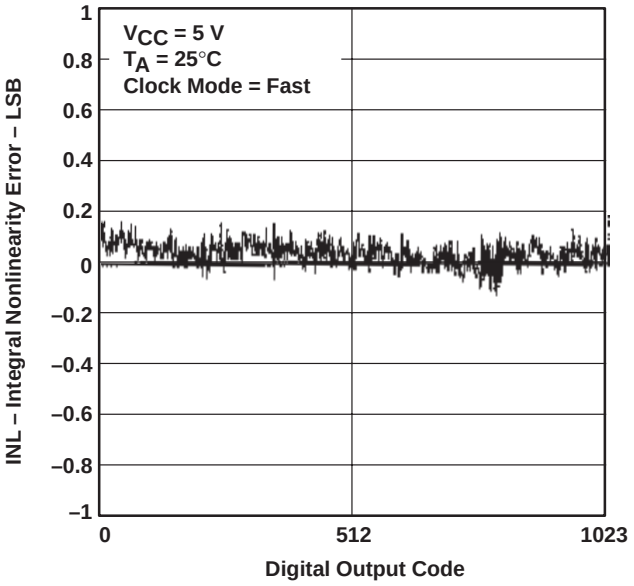

Figure 33

DIFFERENTIAL NONLINEARITY ERROR vs DIGITAL OUTPUT CODE

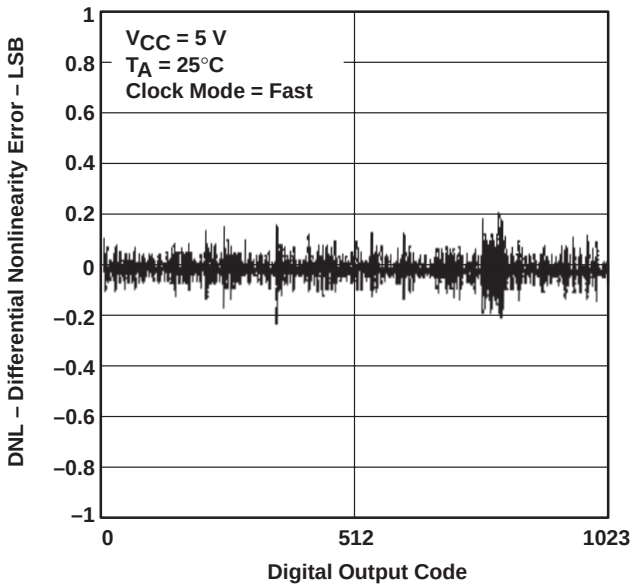

Figure 34

TYPICAL CHARACTERISTICS

INTEGRAL NONLINEARITY ERROR
vs
DIGITAL OUTPUT CODE

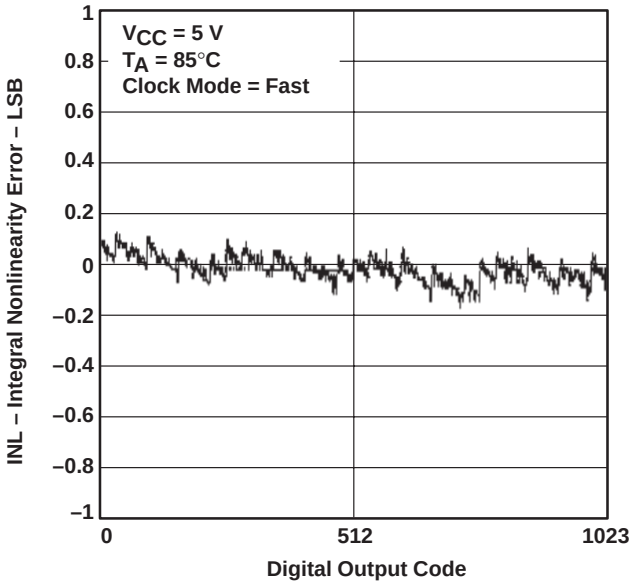

Figure 35

DIFFERENTIAL NONLINEARITY ERROR
vs
DIGITAL OUTPUT CODE

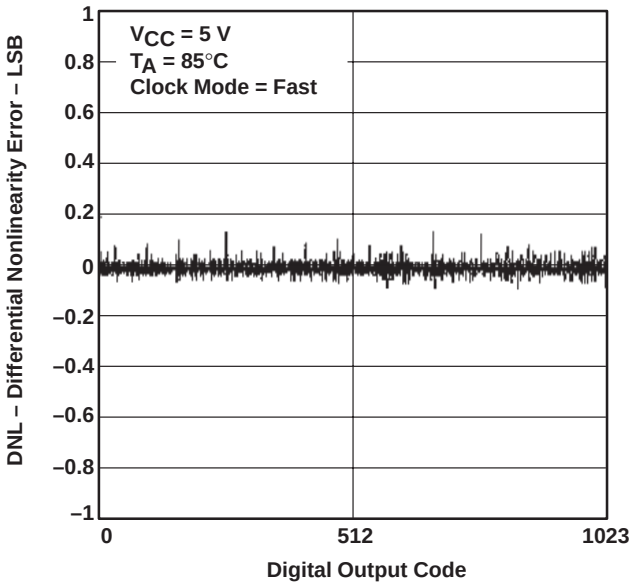

Figure 36

APPLICATION INFORMATION

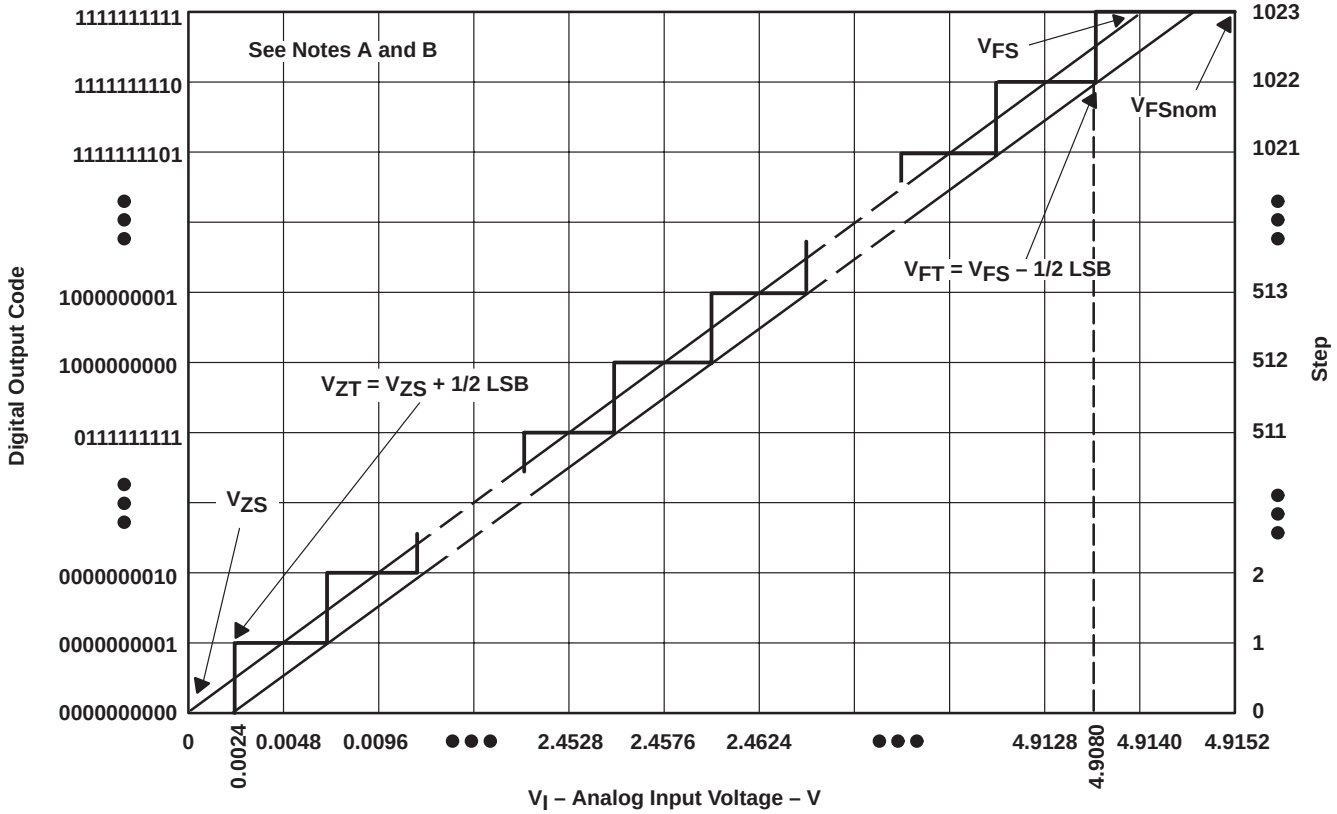

NOTES: A. This curve is based on the assumption that V_{ref+} and V_{ref-} have been adjusted so that the voltage at the transition from digital 0 to 1 (V_{ZT}) is 0.0024 V, and the transition to full scale (V_{FT}) is 4.908 V. 1 LSB = 4.8 mV.

B. The full-scale value (V_{FS}) is the step whose nominal midstep value has the highest absolute value. The zero-scale value (V_{ZS}) is the step whose nominal midstep value equals zero.

Figure 37. Ideal Conversion Characteristics

APPLICATION INFORMATION

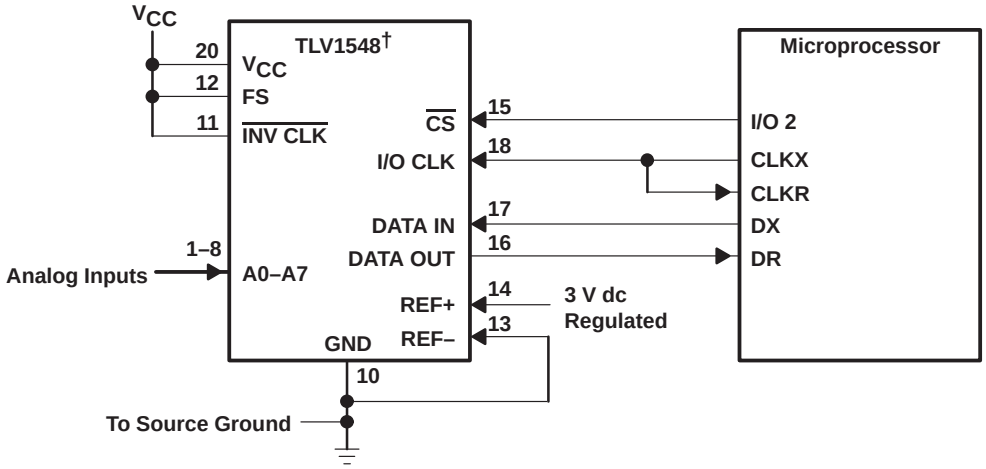

† DB package is shown for TLV1548

Figure 38. Typical Interface to a Microprocessor

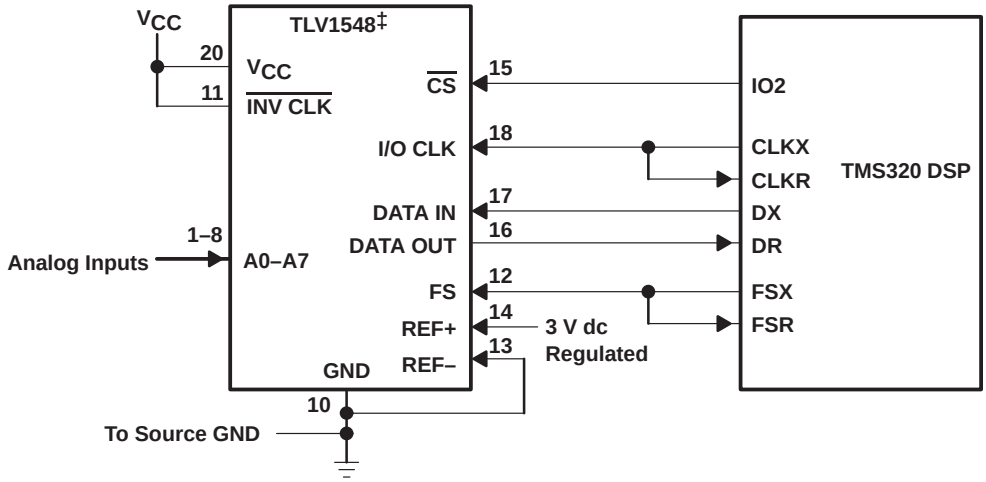

‡ DB package is shown for TLV1548

Figure 39. Typical Interface to a TMS320 DSP

APPLICATIONS INFORMATION

simplified analog input analysis

Using the equivalent circuit in Figure 33, the time required to charge the analog input capacitance from 0 to V_S within 1/2 LSB can be derived as follows:

The capacitance charging voltage is given by:

$$V_C = V_S\left(1-e^{-t_c/R_tC_i}\right) \tag{1}$$

where

$R_t = R_S + r_i$

t_c = Cycle time

The input impedance Z_i is 1 kΩ at 5 V, and is higher (~ 5 kΩ) at 2.7 V. The final voltage to 1/2 LSB is given by:

$$V_C\ (1/2\ \text{LSB}) = V_S - (V_S/2048) \tag{2}$$

Equating equation 1 to equation 2 and solving for cycle time t_c gives:

$$V_S - \left(V_S/2048\right) = V_S\left(1-e^{-t_c/R_tC_i}\right) \tag{3}$$

and time to change to 1/2 LSB (minimum sampling time) is:

$$t_{ch}\ (1/2\ \text{LSB}) = R_t \times C_i \times \ln(2048)$$

where

$\ln(2048) = 7.625$

Therefore, with the values given, the time for the analog input signal to settle is:

$$t_{ch}\ (1/2\ \text{LSB}) = (R_s + 1\ \text{k}\Omega) \times 55\ \text{pF} \times \ln(2048) \tag{4}$$

This time must be less than the converter sample time shown in the timing diagrams. Which is 6x I/O CLK.

$$t_{ch}\ (1/2\ \text{LSB}) \le 6\text{x}\ 1/f_{I/O} \tag{5}$$

Therefore the maximum I/O CLK frequency is:

$$\max(f_{I/O}) = 6/t_{ch}\ (1/2\ \text{LSB}) = 6/(\ln(2048) \times R_t \times C_i) \tag{6}$$

APPLICATIONS INFORMATION

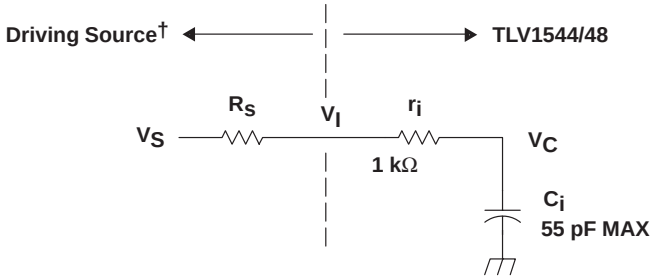

V_I = Input Voltage at AIN
V_S = External Driving Source Voltage
R_S = Source Resistance
r_i = Input Resistance (MUX on Resistance)
C_i = Input Capacitance
V_C = Capacitance Charging Voltage

† Driving source requirements:

- Noise and distortion for the source must be equivalent to the resolution of the converter.
- R_S must be real at the input frequency.

Figure 40. Equivalent Input Circuit Including the Driving Source

maximum conversion throughput

For a supply voltage at 5 V, if the source impedance is less than 1 kΩ, this equates to a minimum sampling time t_{ch}(0.5 LSB) of 0.84 µs. Since the sampling time requires six I/O clocks, the fastest I/O clockfrequency is $6/t_{ch}$ = 7.18 MHz. The minimal total cycle time is given as:

$$t_c = t_{address} + t_{sample} + t_{conv} + t_{d(EOC\uparrow - CS\downarrow)}$$
$$= 0.56\ \mu s + 0.84\ \mu s + 10\ \mu s + 0.1\ \mu s$$
$$= 11.5\ \mu s$$

A maximum throughput of 87 KSPS. The throughput can be even higher with a smaller source impedance.

When source impedance is 100Ω, the minimum sampling time is 0.46 µs. The maximum I/O clock frequency possible is almost 13 MHz. Then 10 MHz clock (maximum I/O CLK for TLV1544/1548) can be used. The minimal total cycle time is:

$$t_c = t_{address} + t_{sample} + t_{conv} + t_{d(EOC\uparrow - CS\downarrow)}$$
$$= 4 \times 1/f + 0.46\ \mu s + 10\ \mu s + 0.1\ \mu s$$
$$= 0.4\ \mu s + 0.46\ \mu s + 10\ \mu s + 0.1\ \mu s$$
$$= 10.96\ \mu s$$

The maximum throughput is 1/10.96 µs = 91 KSPS for this case.

PACKAGING INFORMATION

Orderable Device	Status (1)	Package Type	Package Drawing	Pins	Package Qty	Eco Plan (2)	Lead finish/ Ball material (6)	MSL Peak Temp (3)	Op Temp (°C)	Device Marking (4/5)	Samples
5962-9853801Q2A	ACTIVE	LCCC	FK	20	1	Non-RoHS & Green	SNPB	N / A for Pkg Type	-55 to 125	5962-9853801Q2A TLV1548 MFKB	Samples
5962-9853801QRA	ACTIVE	CDIP	J	20	1	Non-RoHS & Green	SNPB	N / A for Pkg Type	-55 to 125	5962-9853801QRA TLV1548MJB	Samples
TLV1544CD	ACTIVE	SOIC	D	16	40	RoHS & Green	NIPDAU	Level-1-260C-UNLIM	-40 to 85	TLV1544C	Samples
TLV1544CDR	ACTIVE	SOIC	D	16	2500	RoHS & Green	NIPDAU	Level-1-260C-UNLIM		TLV1544C	Samples
TLV1544CPW	ACTIVE	TSSOP	PW	16	90	RoHS & Green	NIPDAU	Level-1-260C-UNLIM		TV1544	Samples
TLV1544CPWG4	ACTIVE	TSSOP	PW	16	90	RoHS & Green	NIPDAU	Level-1-260C-UNLIM		TV1544	Samples
TLV1544CPWR	ACTIVE	TSSOP	PW	16	2000	RoHS & Green	NIPDAU	Level-1-260C-UNLIM		TV1544	Samples
TLV1544ID	ACTIVE	SOIC	D	16	40	RoHS & Green	NIPDAU	Level-1-260C-UNLIM		TLV1544I	Samples
TLV1544IDR	ACTIVE	SOIC	D	16	2500	RoHS & Green	NIPDAU	Level-1-260C-UNLIM		TLV1544I	Samples
TLV1544IPW	ACTIVE	TSSOP	PW	16	90	RoHS & Green	NIPDAU	Level-1-260C-UNLIM		TY1544	Samples
TLV1544IPWG4	ACTIVE	TSSOP	PW	16	90	RoHS & Green	NIPDAU	Level-1-260C-UNLIM		TY1544	Samples
TLV1544IPWR	ACTIVE	TSSOP	PW	16	2000	RoHS & Green	NIPDAU	Level-1-260C-UNLIM		TY1544	Samples
TLV1548CDB	ACTIVE	SSOP	DB	20	70	RoHS & Green	NIPDAU	Level-1-260C-UNLIM	-40 to 85	TV1548	Samples
TLV1548CDBR	ACTIVE	SSOP	DB	20	2000	RoHS & Green	NIPDAU	Level-1-260C-UNLIM		TV1548	Samples
TLV1548IDB	ACTIVE	SSOP	DB	20	70	RoHS & Green	NIPDAU	Level-1-260C-UNLIM		TY1548	Samples
TLV1548IDBR	ACTIVE	SSOP	DB	20	2000	RoHS & Green	NIPDAU	Level-1-260C-UNLIM		TY1548	Samples
TLV1548MFKB	ACTIVE	LCCC	FK	20	1	Non-RoHS & Green	SNPB	N / A for Pkg Type	-55 to 125	5962-9853801Q2A TLV1548 MFKB	Samples

Orderable Device	Status (1)	Package Type	Package Drawing	Pins	Package Qty	Eco Plan (2)	Lead finish/ Ball material (6)	MSL Peak Temp (3)	Op Temp (°C)	Device Marking (4/5)	Samples
TLV1548MJB	ACTIVE	CDIP	J	20	1	Non-RoHS & Green	SNPB	N / A for Pkg Type	-55 to 125	5962-9853801QRA TLV1548MJB	Samples

(1) The marketing status values are defined as follows:
ACTIVE: Product device recommended for new designs.
LIFEBUY: TI has announced that the device will be discontinued, and a lifetime-buy period is in effect.
NRND: Not recommended for new designs. Device is in production to support existing customers, but TI does not recommend using this part in a new design.
PREVIEW: Device has been announced but is not in production. Samples may or may not be available.
OBSOLETE: TI has discontinued the production of the device.

(2) **RoHS:** TI defines "RoHS" to mean semiconductor products that are compliant with the current EU RoHS requirements for all 10 RoHS substances, including the requirement that RoHS substance do not exceed 0.1% by weight in homogeneous materials. Where designed to be soldered at high temperatures, "RoHS" products are suitable for use in specified lead-free processes. TI may reference these types of products as "Pb-Free".
RoHS Exempt: TI defines "RoHS Exempt" to mean products that contain lead but are compliant with EU RoHS pursuant to a specific EU RoHS exemption.
Green: TI defines "Green" to mean the content of Chlorine (Cl) and Bromine (Br) based flame retardants meet JS709B low halogen requirements of <=1000ppm threshold. Antimony trioxide based flame retardants must also meet the <=1000ppm threshold requirement.

(3) MSL, Peak Temp. - The Moisture Sensitivity Level rating according to the JEDEC industry standard classifications, and peak solder temperature.

(4) There may be additional marking, which relates to the logo, the lot trace code information, or the environmental category on the device.

(5) Multiple Device Markings will be inside parentheses. Only one Device Marking contained in parentheses and separated by a "~" will appear on a device. If a line is indented then it is a continuation of the previous line and the two combined represent the entire Device Marking for that device.

(6) Lead finish/Ball material - Orderable Devices may have multiple material finish options. Finish options are separated by a vertical ruled line. Lead finish/Ball material values may wrap to two lines if the finish value exceeds the maximum column width.

Important Information and Disclaimer: The information provided on this page represents TI's knowledge and belief as of the date that it is provided. TI bases its knowledge and belief on information provided by third parties, and makes no representation or warranty as to the accuracy of such information. Efforts are underway to better integrate information from third parties. TI has taken and continues to take reasonable steps to provide representative and accurate information but may not have conducted destructive testing or chemical analysis on incoming materials and chemicals. TI and TI suppliers consider certain information to be proprietary, and thus CAS numbers and other limited information may not be available for release.

In no event shall TI's liability arising out of such information exceed the total purchase price of the TI part(s) at issue in this document sold by TI to Customer on an annual basis.

OTHER QUALIFIED VERSIONS OF TLV1548, TLV1548M :

- Catalog : TLV1548
- Automotive : TLV1548-Q1, TLV1548-Q1
- Enhanced Product : TLV1548-EP, TLV1548-EP
- Military : TLV1548M

NOTE: Qualified Version Definitions:

- Catalog - TI's standard catalog product
- Automotive - Q100 devices qualified for high-reliability automotive applications targeting zero defects
- Enhanced Product - Supports Defense, Aerospace and Medical Applications
- Military - QML certified for Military and Defense Applications

TAPE AND REEL INFORMATION

REEL DIMENSIONS

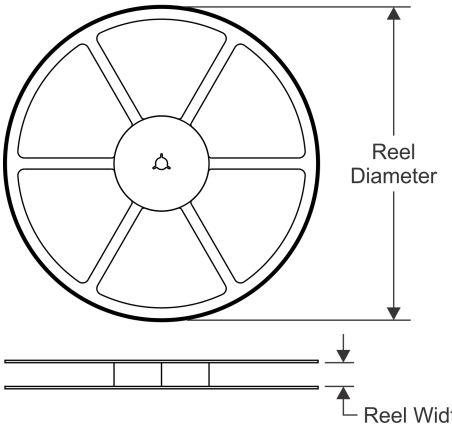

TAPE DIMENSIONS

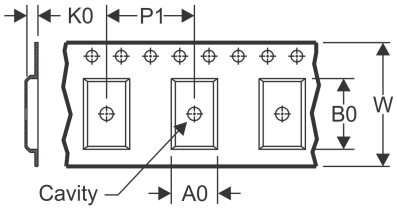

A0	Dimension designed to accommodate the component width
B0	Dimension designed to accommodate the component length
K0	Dimension designed to accommodate the component thickness
W	Overall width of the carrier tape
P1	Pitch between successive cavity centers

QUADRANT ASSIGNMENTS FOR PIN 1 ORIENTATION IN TAPE

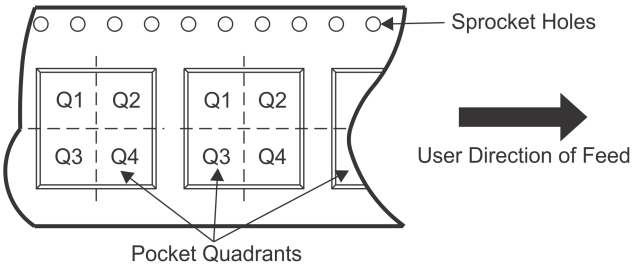

*All dimensions are nominal

Device	Package Type	Package Drawing	Pins	SPQ	Reel Diameter (mm)	Reel Width W1 (mm)	A0 (mm)	B0 (mm)	K0 (mm)	P1 (mm)	W (mm)	Pin1 Quadrant
TLV1544CDR	SOIC	D	16	2500	330.0	16.4	6.5	10.3	2.1	8.0	16.0	Q1
TLV1544CPWR	TSSOP	PW	16	2000	330.0	12.4	6.9	5.6	1.6	8.0	12.0	Q1
TLV1544IDR	SOIC	D	16	2500	330.0	16.4	6.5	10.3	2.1	8.0	16.0	Q1
TLV1544IPWR	TSSOP	PW	16	2000	330.0	12.4	6.9	5.6	1.6	8.0	12.0	Q1
TLV1548CDBR	SSOP	DB	20	2000	330.0	16.4	8.2	7.5	2.5	12.0	16.0	Q1
TLV1548IDBR	SSOP	DB	20	2000	330.0	16.4	8.2	7.5	2.5	12.0	16.0	Q1

TAPE AND REEL BOX DIMENSIONS

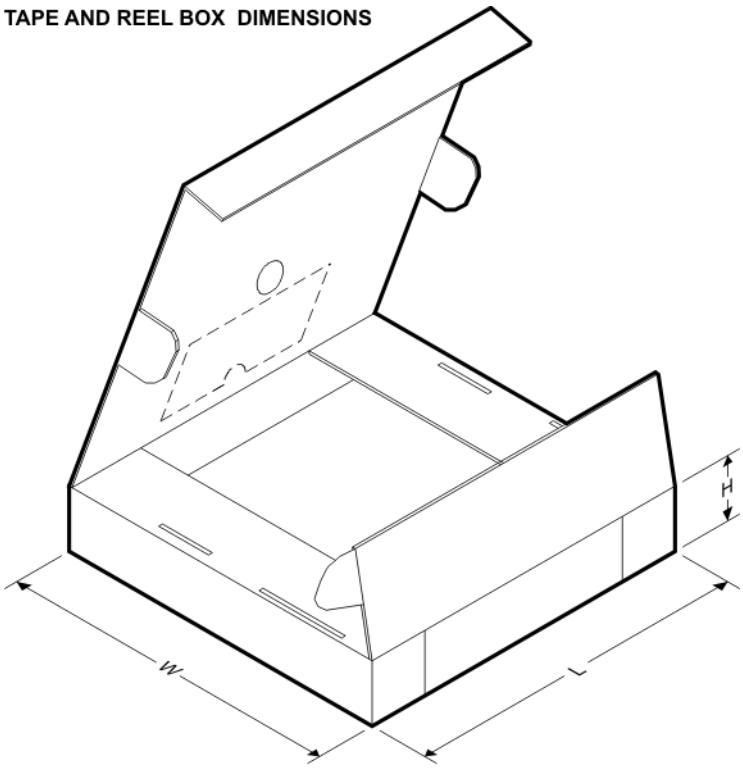

*All dimensions are nominal

Device	Package Type	Package Drawing	Pins	SPQ	Length (mm)	Width (mm)	Height (mm)
TLV1544CDR	SOIC	D	16	2500	350.0	350.0	43.0
TLV1544CPWR	TSSOP	PW	16	2000	350.0	350.0	43.0
TLV1544IDR	SOIC	D	16	2500	350.0	350.0	43.0
TLV1544IPWR	TSSOP	PW	16	2000	350.0	350.0	43.0
TLV1548CDBR	SSOP	DB	20	2000	350.0	350.0	43.0
TLV1548IDBR	SSOP	DB	20	2000	350.0	350.0	43.0

TUBE

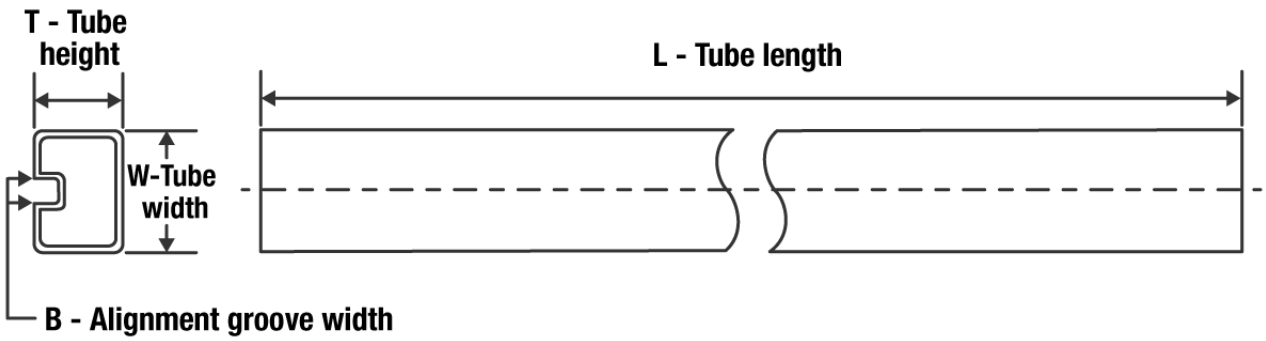

*All dimensions are nominal

Device	Package Name	Package Type	Pins	SPQ	L (mm)	W (mm)	T (µm)	B (mm)
5962-9853801Q2A	FK	LCCC	20	1	506.98	12.06	2030	NA
TLV1544CD	D	SOIC	16	40	505.46	6.76	3810	4
TLV1544CPW	PW	TSSOP	16	90	530	10.2	3600	3.5
TLV1544CPWG4	PW	TSSOP	16	90	530	10.2	3600	3.5
TLV1544ID	D	SOIC	16	40	505.46	6.76	3810	4
TLV1544IPW	PW	TSSOP	16	90	530	10.2	3600	3.5
TLV1544IPWG4	PW	TSSOP	16	90	530	10.2	3600	3.5
TLV1548CDB	DB	SSOP	20	70	530	10.5	4000	4.1
TLV1548IDB	DB	SSOP	20	70	530	10.5	4000	4.1
TLV1548MFKB	FK	LCCC	20	1	506.98	12.06	2030	NA

IMPORTANT NOTICE AND DISCLAIMER

TI PROVIDES TECHNICAL AND RELIABILITY DATA (INCLUDING DATA SHEETS), DESIGN RESOURCES (INCLUDING REFERENCE DESIGNS), APPLICATION OR OTHER DESIGN ADVICE, WEB TOOLS, SAFETY INFORMATION, AND OTHER RESOURCES “AS IS” AND WITH ALL FAULTS, AND DISCLAIMS ALL WARRANTIES, EXPRESS AND IMPLIED, INCLUDING WITHOUT LIMITATION ANY IMPLIED WARRANTIES OF MERCHANTABILITY, FITNESS FOR A PARTICULAR PURPOSE OR NON-INFRINGEMENT OF THIRD PARTY INTELLECTUAL PROPERTY RIGHTS.

These resources are intended for skilled developers designing with TI products. You are solely responsible for (1) selecting the appropriate TI products for your application, (2) designing, validating and testing your application, and (3) ensuring your application meets applicable standards, and any other safety, security, regulatory or other requirements.

These resources are subject to change without notice. TI grants you permission to use these resources only for development of an application that uses the TI products described in the resource. Other reproduction and display of these resources is prohibited. No license is granted to any other TI intellectual property right or to any third party intellectual property right. TI disclaims responsibility for, and you will fully indemnify TI and its representatives against, any claims, damages, costs, losses, and liabilities arising out of your use of these resources.

TI’s products are provided subject to TI’s Terms of Sale or other applicable terms available either on ti.com or provided in conjunction with such TI products. TI’s provision of these resources does not expand or otherwise alter TI’s applicable warranties or warranty disclaimers for TI products.

TI objects to and rejects any additional or different terms you may have proposed.

Mailing Address: Texas Instruments, Post Office Box 655303, Dallas, Texas 75265
Copyright © 2022, Texas Instruments Incorporated