features

- **Dual 12-Bit Voltage Output DAC**
- **Programmable Settling Time**
  - **3 μs in Fast Mode**
  - **10 μs in Slow Mode**
- **Compatible With TMS320 and SPI Serial Ports**
- **Differential Nonlinearity <0.5 LSB Typ**
- **Monotonic Over Temperature**
- **Direct Replacement for TLC5618A (C and I Suffixes)**
- **Available in Q-Temp Automotive**
  HighRel Automotive Applications
  Configuration Control/Print Support
  Qualification to Automotive Standards

applications

- **Digital Servo Control Loops**
- **Digital Offset and Gain Adjustment**
- **Industrial Process Control**
- **Machine and Motion Control Devices**
- **Mass Storage Devices**

P, D OR JG PACKAGE
(TOP VIEW)

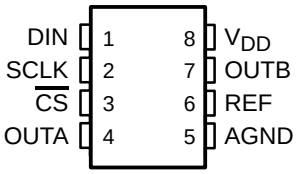

FK PACKAGE
(TOP VIEW)

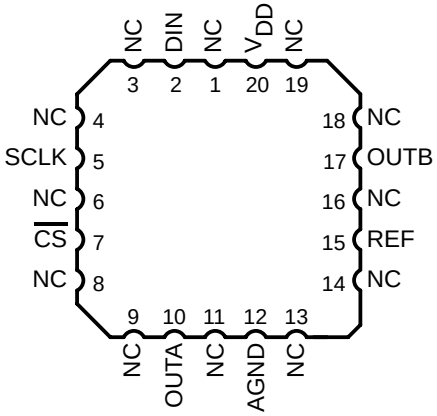

description

The TLV5618A is a dual 12-bit voltage output DAC with a flexible 3-wire serial interface. The serial interface is compatible with TMS320, SPI™, QSPI™, and Microwire™ serial ports. It is programmed with a 16-bit serial string containing 4 control and 12 data bits.

The resistor string output voltage is buffered by an x2 gain rail-to-rail output buffer. The buffer features a Class-AB output stage to improve stability and reduce settling time. The programmable settling time of the DAC allows the designer to optimize speed versus power dissipation.

Implemented with a CMOS process, the device is designed for single supply operation from 2.7 V to 5.5 V. It is available in an 8-pin SOIC package in standard commercial and industrial temperature ranges.

The TLV5618AC is characterized for operation from 0°C to 70°C. The TLV5618AI is characterized for operation from –40°C to 85°C. The TLV5618AQ is characterized for operation from –40°C to 125°C. The TLV5618AM is characterized for operation from –55°C to 125°C.

AVAILABLE OPTIONS

T_A	PACKAGE			
	PLASTIC DIP (P)	SOIC (D)	CERAMIC DIP (JG)	20 PAD LCCC (FK)
0°C to 70°C	TLV5618ACP	TLV5618ACD	—	—
–40°C to 85°C	TLV5618AIP	TLV5618AID	—	—
–40°C to 125°C	—	TLV5618AQD TLV5618AQDR	—	—
–55°C to 125°C	—	—	TLV5618AMJG	TLV5618AMFK

Please be aware that an important notice concerning availability, standard warranty, and use in critical applications of Texas Instruments semiconductor products and disclaimers thereto appears at the end of this data sheet.

SPI and QSPI are trademarks of Motorola, Inc.
Microwire is a trademark of National Semiconductor Corporation.

PRODUCTION DATA information is current as of publication date. Products conform to specifications per the terms of Texas Instruments standard warranty. Production processing does not necessarily include testing of all parameters.

Copyright © 2002, Texas Instruments Incorporated
On products compliant to MIL-PRF-38535, all parameters are tested unless otherwise noted. On all other products, production processing does not necessarily include testing of all parameters.

functional block diagram

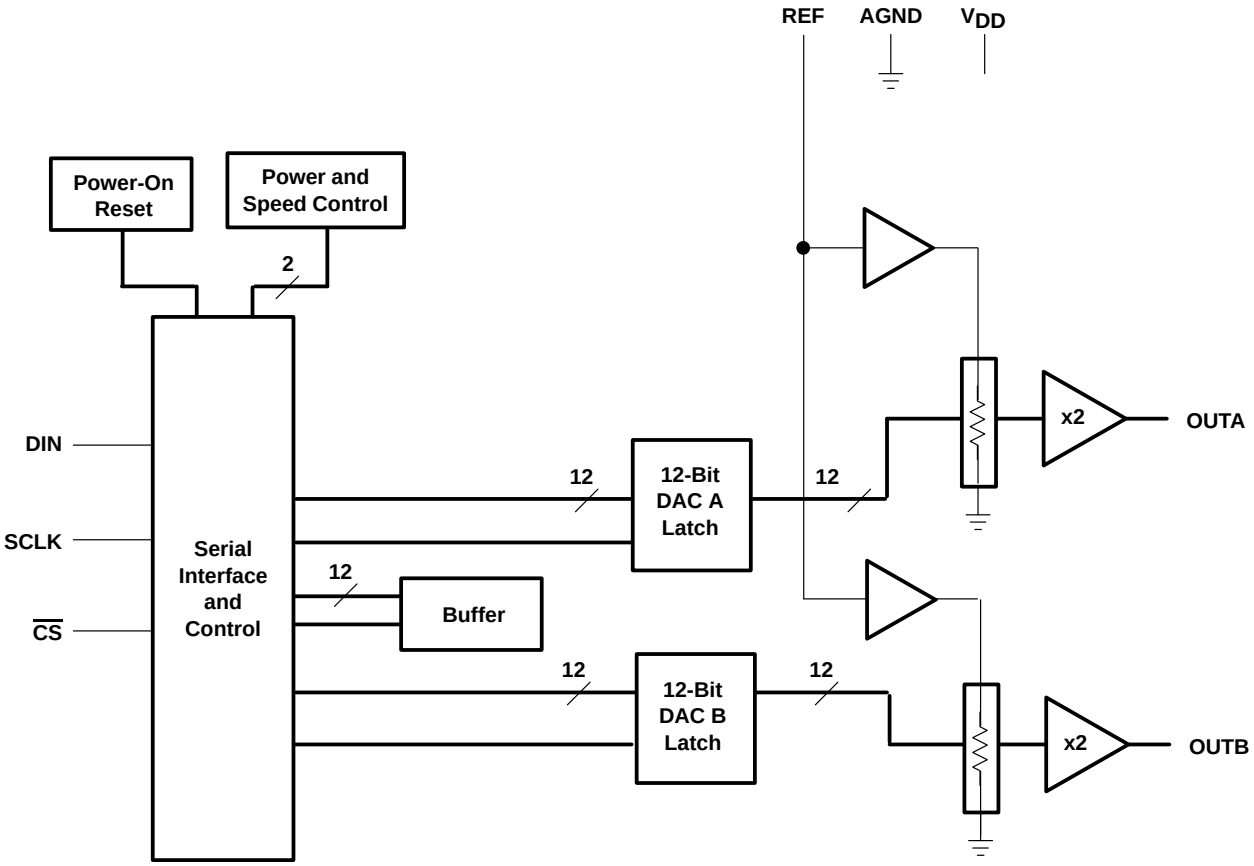

Terminal Functions

TERMINAL NAME	TERMINAL NO.	I/O/P	DESCRIPTION
AGND	5	P	Ground
$\overline{CS}$	3	I	Chip select. Digital input active low, used to enable/disable inputs.
DIN	1	I	Digital serial data input
OUTA	4	O	DAC A analog voltage output
OUTB	7	O	DAC B analog voltage output
REF	6	I	Analog reference voltage input
SCLK	2	I	Digital serial clock input
V_{DD}	8	P	Positive power supply

absolute maximum ratings over operating free-air temperature range (unless otherwise noted)†

Supply voltage (V_{DD} to AGND) . . . . . 7 V
Reference input voltage range . . . . . – 0.3 V to V_{DD} + 0.3 V
Digital input voltage range . . . . . – 0.3 V to V_{DD} + 0.3 V
Operating free-air temperature range, T_A: TLV5618AC . . . . . 0°C to 70°C
TLV5618AI . . . . . –40°C to 85°C
TLV5618AQ . . . . . –40°C to 125°C
TLV5618AM . . . . . –55°C to 125°C
Storage temperature range, T_{stg} . . . . . –65°C to 150°C
Lead temperature 1,6 mm (1/16 inch) from case for 10 seconds . . . . . 260°C

† Stresses beyond those listed under “absolute maximum ratings” may cause permanent damage to the device. These are stress ratings only, and functional operation of the device at these or any other conditions beyond those indicated under “recommended operating conditions” is not implied. Exposure to absolute-maximum-rated conditions for extended periods may affect device reliability.

DISSIPATION RATING TABLE

PACKAGE	$T_A \le 25°C$ POWER RATING	DERATING FACTOR ABOVE $T_A = 25°C$‡	$T_A = 70°C$ POWER RATING	$T_A = 85°C$ POWER RATING	$T_A = 125°C$ POWER RATING
D	635 mW	5.08 mW/°C	407 mW	330 mW	127 mW
FK	1375 mW	11.00 mW/°C	880 mW	715 mW	275 mW
JG	1050 mW	8.40 mW/°C	672 mW	546 mW	210 mW

‡ This is the inverse of the traditional junction-to-ambient thermal resistance ($R\Theta_{JA}$). Thermal resistances are not production tested and are for informational purposes only.

recommended operating conditions

		MIN	NOM	MAX	UNIT
Supply voltage, V_{DD}	V_{DD} = 5 V	4.5	5	5.5	V
	V_{DD} = 3 V	2.7	3	3.3	
Power on reset		0.55		2	V
High-level digital input voltage, V_{IH}	V_{DD} = 2.7 V	2			V
	V_{DD} = 5.5 V	2.4			
Low-level digital input voltage, V_{IL}	V_{DD} = 2.7 V			0.6	V
	V_{DD} = 5.5 V			1	
Reference voltage, V_{ref} to REF terminal	V_{DD} = 5 V (see Note 1)	AGND	2.048	V_{DD}–1.5	V
	V_{DD} = 3 V (see Note 1)	AGND	1.024	V_{DD}–1.5	
Load resistance, R_L		2			kΩ
Load capacitance, C_L				100	pF
Clock frequency, $f_{(CLK)}$				20	MHz
Operating free-air temperature, T_A	TLV5618AC	0		70	°C
	TLV5618AI	–40		85	
	TLV5618AQ	–40		125	
	TLV5618AM	–55		125	

NOTE 1: Due to the x2 output buffer, a reference input voltage ≥ (V_{DD}–0.4 V)/2 causes clipping of the transfer function.

electrical characteristics over recommended operating conditions (unless otherwise noted)

power supply

PARAMETER		TEST CONDITIONS				MIN	TYP	MAX	UNIT
I_{DD}	Power supply current	No load, All inputs = AGND or V_{DD}, DAC latch = All ones	V_{DD} = 4.5 V to 5.5 V	C & I suffixes	Fast		1.8	2.5	mA
					Slow		0.8	1	
			V_{DD} = 2.7 V to 3.3 V		Fast		1.6	2.2	mA
					Slow		0.6	0.9	
			V_{DD} = 2.7 V to 5.5 V	M & Q suffixes	Fast		1.8	2.3	mA
					Slow		0.8	1	
	Power down supply current						1		µA
PSRR	Power supply rejection ratio		Zero scale, See Note 2				–65		dB
			Full scale, See Note 3				–65		

NOTES: 2. Power supply rejection ratio at zero scale is measured by varying V_{DD} and is given by:
$PSRR = 20 \log [(E_{ZS}(V_{DD}max) – E_{ZS}(V_{DD}min)/V_{DD}max]$
3. Power supply rejection ratio at full scale is measured by varying V_{DD} and is given by:
$PSRR = 20 \log [(E_G(V_{DD}max) – E_G(V_{DD}min)/V_{DD}max]$

static DAC specifications

PARAMETER		TEST CONDITIONS			MIN	TYP	MAX	UNIT
	Resolution				12			bits
INL	Integral nonlinearity	See Note 4				±2	±4	LSB
DNL	Differential nonlinearity	See Note 5				±0.5	±1	LSB
E_{ZS}	Zero-scale error (offset error at zero scale)	See Note 6					±12	mV
E_{ZS} (TC)	Zero-scale-error temperature coefficient	See Note 7				3		ppm/°C
E_G	Gain error	See Note 8	C & I suffixes	V_{DD} = 4.5 V – 5.5 V			±0.29	% full scale V
				V_{DD} = 2.7 V – 3.3 V			±0.6	
			M & Q suffixes	V_{DD} = 2.7 V – 5.5 V			±0.6	
E_G (TC)	Gain-error temperature coefficient	See Note 9				1		ppm/°C

NOTES: 4. The relative accuracy of integral nonlinearity (INL), sometimes referred to as linearity error, is the maximum deviation of the output from the line between zero and full scale, excluding the effects of zero-code and full-scale errors.
5. The differential nonlinearity (DNL), sometimes referred to as differential error, is the difference between the measured and ideal 1-LSB amplitude change of any two adjacent codes.
6. Zero-scale error is the deviation from zero voltage output when the digital input code is zero.
7. Zero-scale-error temperature coefficient is given by: $E_{ZS}\ TC = [E_{ZS}\ (T_{max}) – E_{ZS}\ (T_{min})]/2V_{ref} \times 10^6/(T_{max} – T_{min})$.
8. Gain error is the deviation from the ideal output ($2V_{ref}$ – 1 LSB) with an output load of 10 kΩ.
9. Gain temperature coefficient is given by: $E_G\ T_C = [E_G\ (T_{max}) – E_g\ (T_{min})]/2V_{ref} \times 10^6/(T_{max} – T_{min})$.

output specifications

PARAMETER		TEST CONDITIONS	MIN	TYP	MAX	UNIT
V_O	Output voltage range	R_L = 10 kΩ	0		V_{DD}–0.4	V
	Output load regulation accuracy	V_O = 4.096 V, 2.048 V, R_L = 2 kΩ to 10 kΩ			±0.29	% FS

electrical characteristics over recommended operating conditions (unless otherwise noted) (continued)

reference input

PARAMETER		TEST CONDITIONS		MIN	TYP	MAX	UNIT
V_I	Input voltage range			0		V_{DD}–1.5	V
R_I	Input resistance				10		MΩ
C_I	Input capacitance				5		pF
	Reference input bandwidth	REF = 0.2 V_{pp} + 1.024 V dc	Fast		1.3		MHz
			Slow		525		kHz
	Reference feedthrough	REF = 1 V_{pp} at 1 kHz + 1.024 V dc (see Note 10)			–80		dB

NOTE 10: Reference feedthrough is measured at the DAC output with an input code = 0x000.

digital inputs

PARAMETER		TEST CONDITIONS	MIN	TYP	MAX	UNIT
I_{IH}	High-level digital input current	$V_I = V_{DD}$			1	µA
I_{IL}	Low-level digital input current	V_I = 0 V	–1			µA
C_i	Input capacitance			8		pF

analog output dynamic performance

PARAMETER		TEST CONDITIONS		MIN	TYP	MAX	UNIT
$t_{s(FS)}$	Output settling time, full scale	R_L = 10 kΩ, C_L = 100 pF, See Note 11	Fast		1	3	µs
			Slow		3	10	
$t_{s(CC)}$	Output settling time, code to code	R_L = 10 kΩ, C_L = 100 pF, See Note 12	Fast		1		µs
			Slow		2		
SR	Slew rate	R_L = 10 kΩ, C_L = 100 pF, See Note 13	Fast		3		V/µs
			Slow		0.5		
	Glitch energy	DIN = 0 to 1, FCLK = 100 kHz, $\overline{CS}$ = V_{DD}			5		nV–s
SNR	Signal-to-noise ratio	f_S = 102 kSPS, f_{out} = 1 kHz, R_L = 10 kΩ, C_L = 100 pF			76		dB
SINAD	Signal-to-noise + distortion				68		
THD	Total harmonic distortion				–68		
SFDR	Spurious free dynamic range				72		

NOTES: 11. Settling time is the time for the output signal to remain within ±0.5 LSB of the final measured value for a digital input code change of 0x020 to 0xFDF and 0xFDF to 0x020 respectively. Not tested, assured by design.
12. Settling time is the time for the output signal to remain within ± 0.5 LSB of the final measured value for a digital input code change of one count. Not tested, assured by design.
13. Slew rate determines the time it takes for a change of the DAC output from 10% to 90% of full-scale voltage.

digital input timing requirements

				MIN	NOM	MAX	UNIT
$t_{su(CS-CK)}$	Setup time, $\overline{CS}$ low before first negative SCLK edge	C and I suffixes	V_{DD} = 5 V	5			ns
			V_{DD} = 3 V	10			
		Q and M suffixes		10			ns
$t_{su(C16-CS)}$	Setup time, 16th negative SCLK edge before $\overline{CS}$ rising edge			10			ns
$t_{w(H)}$	SCLK pulse width high			25			ns
$t_{w(L)}$	SCLK pulse width low			25			ns
$t_{su(D)}$	Setup time, data ready before SCLK falling edge	C and I suffixes	V_{DD} = 5 V	5			ns
			V_{DD} = 3 V	10			
		Q and M suffixes		8			
$t_{h(D)}$	Hold time, data held valid after SCLK falling edge	C and I suffixes	V_{DD} = 5 V	5			ns
			V_{DD} = 3 V	10			
		Q and M suffixes		10			
$t_{h(CSH)}$	Hold time, $\overline{CS}$ high between cycles		V_{DD} = 5 V	25			ns
			V_{DD} = 3 V	50			

timing requirements

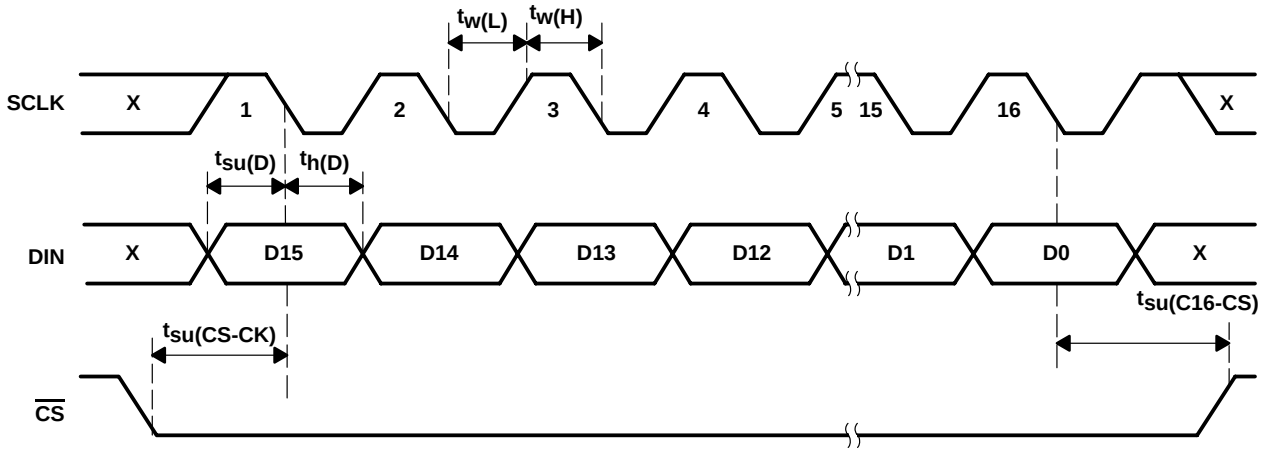

Figure 1. Timing Diagram

TYPICAL CHARACTERISTICS

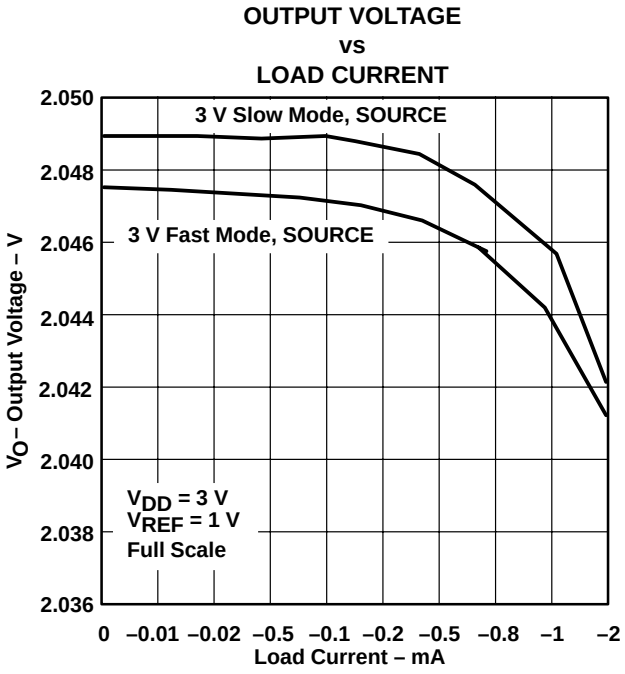

Figure 2

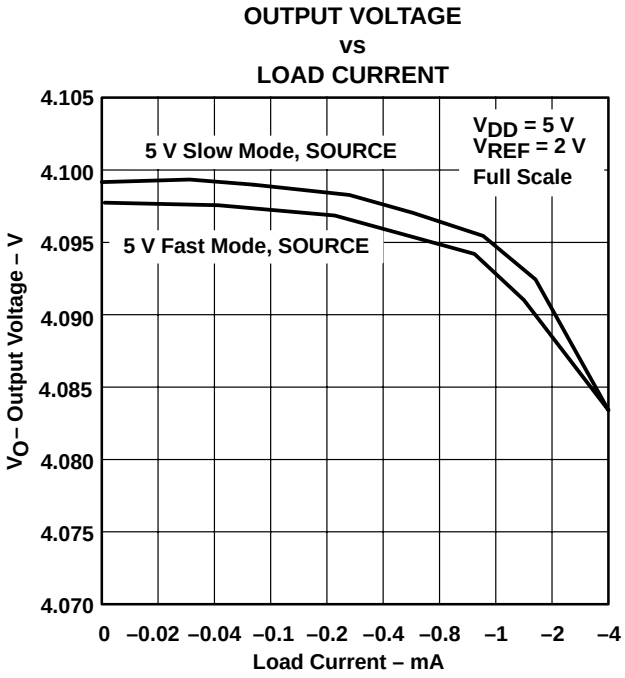

Figure 3

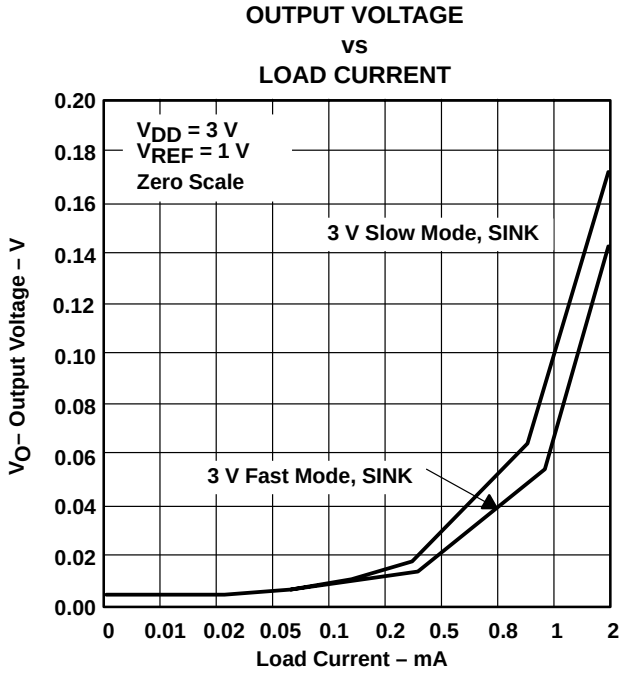

Figure 4

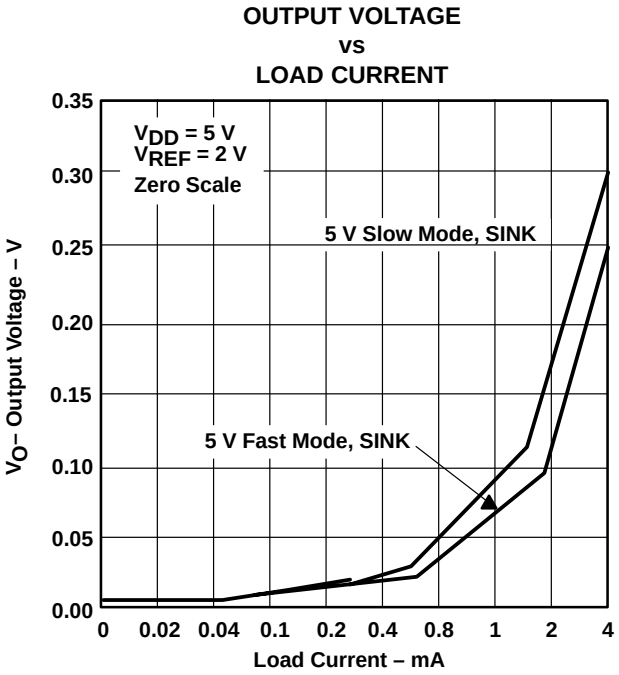

Figure 5

TYPICAL CHARACTERISTICS

SUPPLY CURRENT vs FREE-AIR TEMPERATURE

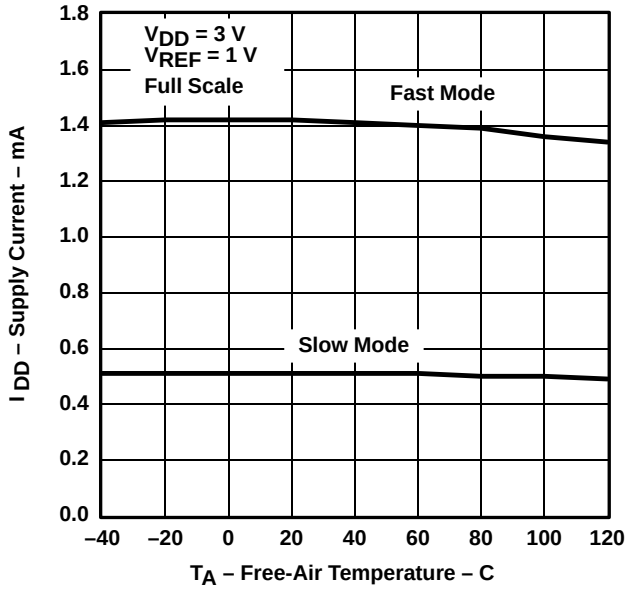

Figure 6

SUPPLY CURRENT vs FREE-AIR TEMPERATURE

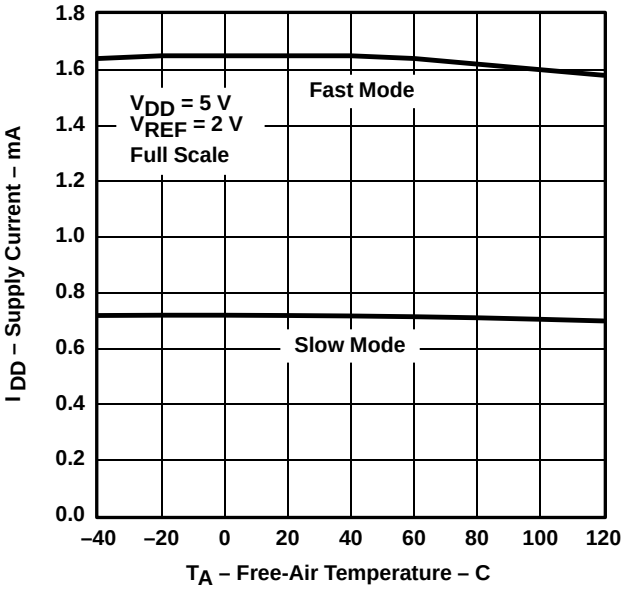

Figure 7

TOTAL HARMONIC DISTORTION vs FREQUENCY

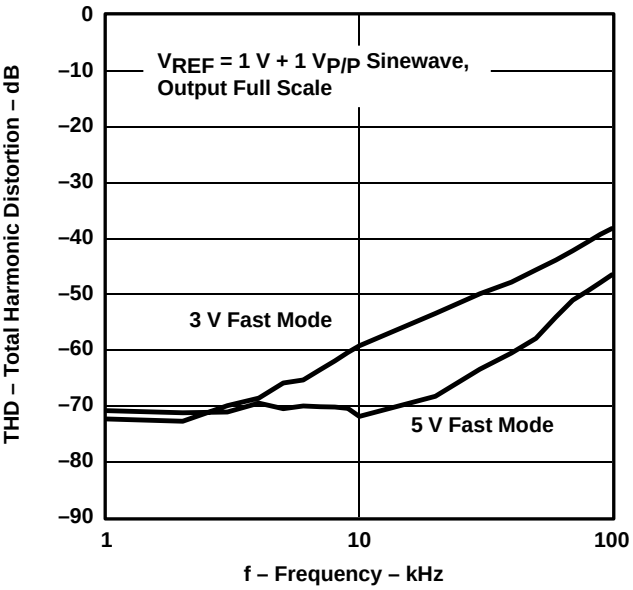

Figure 8

TOTAL HARMONIC DISTORTION vs FREQUENCY

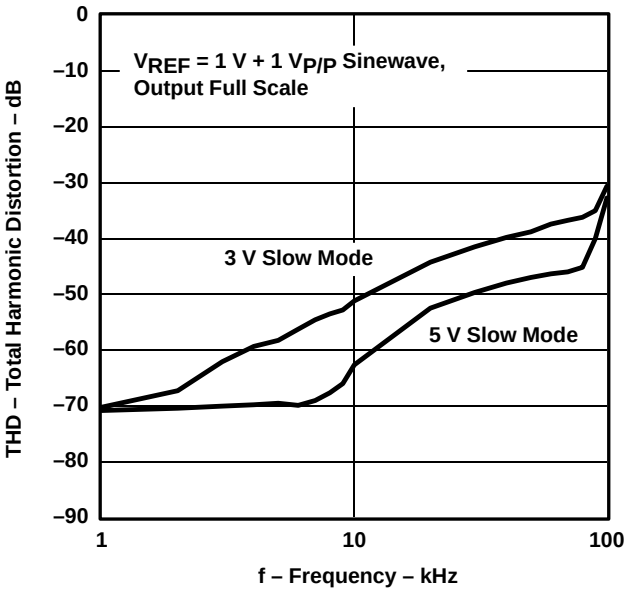

Figure 9

TYPICAL CHARACTERISTICS

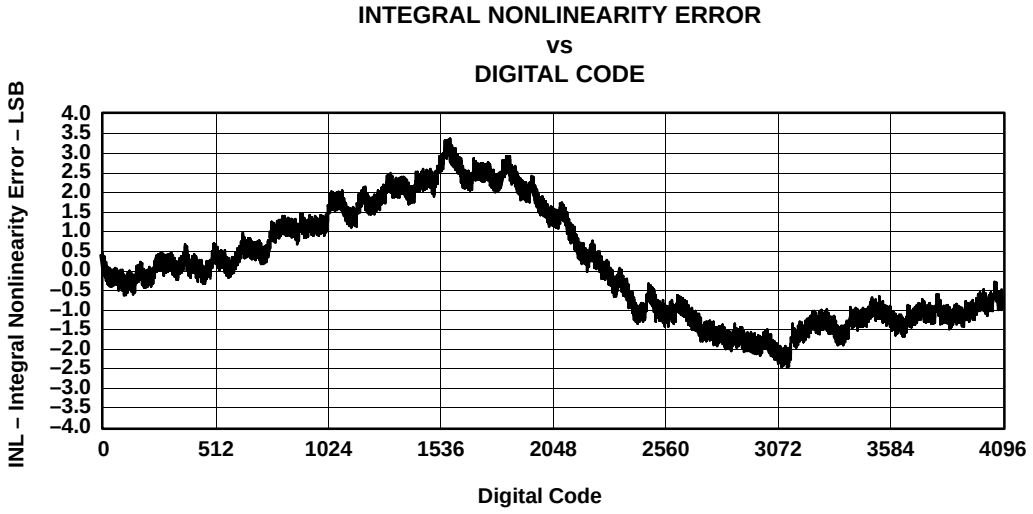

Figure 10

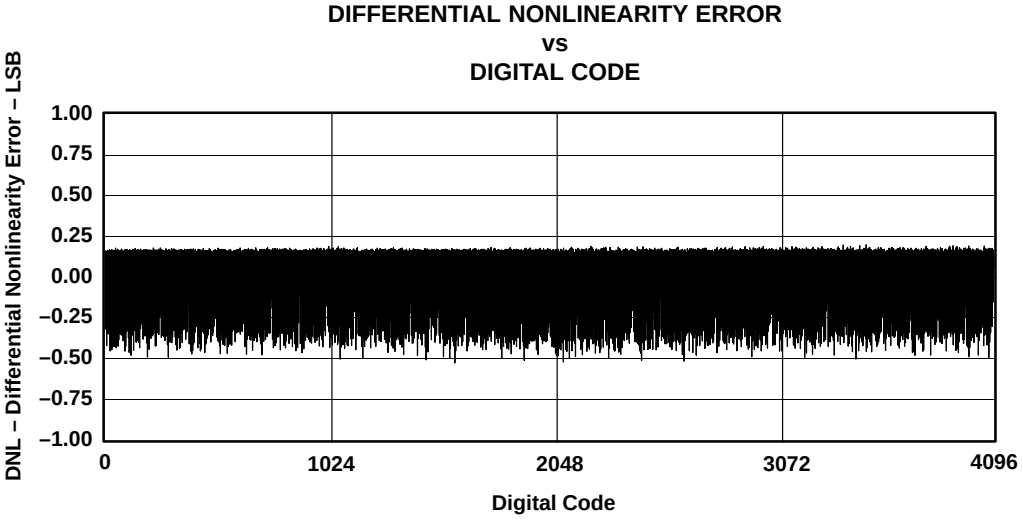

Figure 11

APPLICATION INFORMATION

general function

The TLV5618A is a dual 12-bit, single-supply DAC, based on a resistor-string architecture. It consists of a serial interface, a speed and power down control logic, a resistor string, and a rail-to-rail output buffer.

The output voltage (full scale determined by the reference) is given by:

$$2\ \mathrm{REF}\ \frac{\mathrm{CODE}}{2^n}\ [\mathrm{V}]$$

Where REF is the reference voltage and CODE is the digital input value within the range of 0_{10} to 2^n–1, where n=12 (bits). The 16-bit data word, consisting of control bits and the new DAC value, is illustrated in the *data format* section. A power-on reset initially resets the internal latches to a defined state (all bits zero).

serial interface

A falling edge of $\overline{CS}$ starts shifting the data bit-per-bit (starting with the MSB) to the internal register on the falling edges of SCLK. After 16 bits have been transferred or $\overline{CS}$ rises, the content of the shift register is moved to the target latches (DAC A, DAC B, BUFFER, CONTROL), depending on the control bits within the data word.

Figure 12 shows examples of how to connect the TLV5618A to TMS320, SPI, and Microwire.

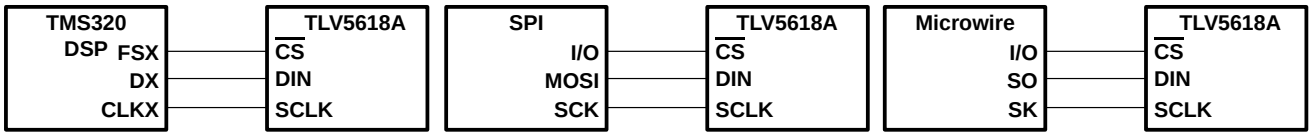

Figure 12. Three-Wire Interface

Notes on SPI and Microwire: Before the controller starts the data transfer, the software has to generate a falling edge on the pin connected to $\overline{CS}$. If the word width is 8 bits (SPI and Microwire) two write operations must be performed to program the TLV5618A. After the write operation(s), the holding registers or the control register are updated automatically on the next positive clock edge following the 16th falling clock edge.

serial clock frequency and update rate

The maximum serial clock frequency is given by:

$$f_{sclkmax} = \frac{1}{t_{whmin} + t_{wlmin}} = 20\ \mathrm{MHz}$$

The maximum update rate is:

$$f_{updatemax} = \frac{1}{16\left(t_{whmin} + t_{wlmin}\right)} = 1.25\ \mathrm{MHz}$$

Note that the maximum update rate is just a theoretical value for the serial interface, as the settling time of the TLV5618A should also be considered.

APPLICATION INFORMATION

data format

The 16-bit data word for the TLV5618A consists of two parts:

- Program bits (D15..D12)
- New data (D11..D0)

D15	D14	D13	D12	D11	D10	D9	D8	D7	D6	D5	D4	D3	D2	D1	D0
R1	SPD	PWR	R0	MSB	12 Data bits										LSB

SPD: Speed control bit 1 → fast mode 0 → slow mode
PWR: Power control bit 1 → power down 0 → normal operation
On power up, SPD and PWD are reset to 0 (slow mode and normal operation)

The following table lists all possible combinations of register-select bits:

register-select bits

R1	R0	REGISTER
0	0	Write data to DAC B and BUFFER
0	1	Write data to BUFFER
1	0	Write data to DAC A and update DAC B with BUFFER content
1	1	Reserved

The meaning of the 12 data bits depends on the register. If one of the DAC registers or the BUFFER is selected, then the 12 data bits determine the new DAC value:

examples of operation

- Set DAC A output, select fast mode:

  Write new DAC A value and update DAC A output:

D15	D14	D13	D12	D11	D10	D9	D8	D7	D6	D5	D4	D3	D2	D1	D0
1	1	0	0	New DAC A output value											

The DAC A output is updated on the rising clock edge after D0 is sampled.

- Set DAC B output, select fast mode:

  Write new DAC B value to BUFFER and update DAC B output:

D15	D14	D13	D12	D11	D10	D9	D8	D7	D6	D5	D4	D3	D2	D1	D0
0	1	0	0	New BUFFER content and DAC B output value											

The DAC A output is updated on the rising clock edge after D0 is sampled.

- Set DAC A value, set DAC B value, update both simultaneously, select slow mode:

  1. Write data for DAC B to BUFFER:

D15	D14	D13	D12	D11	D10	D9	D8	D7	D6	D5	D4	D3	D2	D1	D0
0	0	0	1	New DAC B value											

  2. Write new DAC A value and update DAC A and B simultaneously:

D15	D14	D13	D12	D11	D10	D9	D8	D7	D6	D5	D4	D3	D2	D1	D0
1	0	0	0	New DAC A value											

APPLICATION INFORMATION

examples of operation (continued)

Both outputs are updated on the rising clock edge after D0 from the DAC A data word is sampled.

- Set power-down mode:

D15	D14	D13	D12	D11	D10	D9	D8	D7	D6	D5	D4	D3	D2	D1	D0
X	X	1	X	X	X	X	X	X	X	X	X	X	X	X	X

X = Don't care

linearity, offset, and gain error using single ended supplies

When an amplifier is operated from a single supply, the voltage offset can still be either positive or negative. With a positive offset, the output voltage changes on the first code change. With a negative offset, the output voltage may not change with the first code, depending on the magnitude of the offset voltage.

The output amplifier attempts to drive the output to a negative voltage. However, because the most negative supply rail is ground, the output cannot drive below ground and clamps the output at 0 V.

The output voltage then remains at zero until the input code value produces a sufficient positive output voltage to overcome the negative offset voltage, resulting in the transfer function shown in Figure 13.

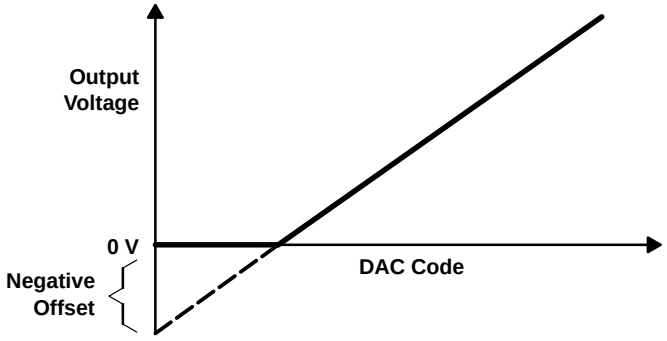

Figure 13. Effect of Negative Offset (Single Supply)

This offset error, not the linearity error, produces this breakpoint. The transfer function would have followed the dotted line if the output buffer could drive below the ground rail.

For a DAC, linearity is measured between zero-input code (all inputs 0) and full-scale code (all inputs 1) after offset and full scale are adjusted out or accounted for in some way. However, single supply operation does not allow for adjustment when the offset is negative due to the breakpoint in the transfer function. So the linearity is measured between full-scale code and the lowest code that produces a positive output voltage.

APPLICATION INFORMATION

definitions of specifications and terminology

integral nonlinearity (INL)

The relative accuracy or integral nonlinearity (INL), sometimes referred to as linearity error, is the maximum deviation of the output from the line between zero and full scale excluding the effects of zero code and full-scale errors.

differential nonlinearity (DNL)

The differential nonlinearity (DNL), sometimes referred to as differential error, is the difference between the measured and ideal 1 LSB amplitude change of any two adjacent codes. Monotonic means the output voltage changes in the same direction (or remains constant) as a change in the digital input code.

zero-scale error (E_{ZS})

Zero-scale error is defined as the deviation of the output from 0 V at a digital input value of 0.

gain error (E_G)

Gain error is the error in slope of the DAC transfer function.

total harmonic distortion (THD)

THD is the ratio of the rms value of the first six harmonic components to the value of the fundamental signal. The value for THD is expressed in decibels.

signal-to-noise ratio + distortion (S/N+D)

S/N+D is the ratio of the rms value of the output signal to the rms sum of all other spectral components below the Nyquist frequency, including harmonics but excluding dc. The value for S/N+D is expressed in decibels.

spurious free dynamic range (SFDR)

Spurious free dynamic range is the difference between the rms value of the output signal and the rms value of the largest spurious signal within a specified bandwidth. The value for SFDR is expressed in decibels.

PACKAGING INFORMATION

Orderable Device	Status (1)	Package Type	Package Drawing	Pins	Package Qty	Eco Plan (2)	Lead finish/ Ball material (6)	MSL Peak Temp (3)	Op Temp (°C)	Device Marking (4/5)	Samples
5962-9955701Q2A	ACTIVE	LCCC	FK	20	1	RoHS-Exempt & Green	Call TI	N / A for Pkg Type	-55 to 125	5962-9955701Q2A TLV5618 AMFKB	Samples
5962-9955701QPA	ACTIVE	CDIP	JG	8	1	Non-RoHS & Green	SNPB	N / A for Pkg Type	-55 to 125	9955701QPA TLV5618AM	Samples
TLV5618ACD	ACTIVE	SOIC	D	8	75	RoHS & Green	NIPDAU	Level-1-260C-UNLIM	0 to 70	TV5618	Samples
TLV5618ACDG4	ACTIVE	SOIC	D	8	75	RoHS & Green	NIPDAU	Level-1-260C-UNLIM	0 to 70	TV5618	Samples
TLV5618ACDR	ACTIVE	SOIC	D	8	2500	RoHS & Green	NIPDAU	Level-1-260C-UNLIM	0 to 70	TV5618	Samples
TLV5618ACDRG4	ACTIVE	SOIC	D	8	2500	RoHS & Green	NIPDAU	Level-1-260C-UNLIM	0 to 70	TV5618	Samples
TLV5618ACP	ACTIVE	PDIP	P	8	50	RoHS & Green	NIPDAU	N / A for Pkg Type	0 to 70	TLV5618AC	Samples
TLV5618AID	ACTIVE	SOIC	D	8	75	RoHS & Green	NIPDAU	Level-1-260C-UNLIM	-40 to 85	TY5618	Samples
TLV5618AIDG4	ACTIVE	SOIC	D	8	75	RoHS & Green	NIPDAU	Level-1-260C-UNLIM	-40 to 85	TY5618	Samples
TLV5618AIDR	ACTIVE	SOIC	D	8	2500	RoHS & Green	NIPDAU	Level-1-260C-UNLIM	-40 to 85	TY5618	Samples
TLV5618AIP	ACTIVE	PDIP	P	8	50	RoHS & Green	NIPDAU	N / A for Pkg Type	-40 to 85	TLV5618AI	Samples
TLV5618AIPE4	ACTIVE	PDIP	P	8	50	RoHS & Green	NIPDAU	N / A for Pkg Type	-40 to 85	TLV5618AI	Samples
TLV5618AMFKB	ACTIVE	LCCC	FK	20	1	RoHS-Exempt & Green	Call TI	N / A for Pkg Type	-55 to 125	5962-9955701Q2A TLV5618 AMFKB	Samples
TLV5618AMJG	ACTIVE	CDIP	JG	8	1	Non-RoHS & Green	SNPB	N / A for Pkg Type	-55 to 125	TLV5618AMJG	Samples
TLV5618AMJGB	ACTIVE	CDIP	JG	8	1	Non-RoHS & Green	SNPB	N / A for Pkg Type	-55 to 125	9955701QPA TLV5618AM	Samples
TLV5618AQD	ACTIVE	SOIC	D	8	75	RoHS & Green	NIPDAU	Level-1-260C-UNLIM	-40 to 125	V5618A	Samples
TLV5618AQDG4	ACTIVE	SOIC	D	8	75	RoHS & Green	NIPDAU	Level-1-260C-UNLIM		V5618A	Samples

Orderable Device	Status (1)	Package Type	Package Drawing	Pins	Package Qty	Eco Plan (2)	Lead finish/ Ball material (6)	MSL Peak Temp (3)	Op Temp (°C)	Device Marking (4/5)	Samples
TLV5618AQDR	ACTIVE	SOIC	D	8	2500	RoHS & Green	NIPDAU	Level-1-260C-UNLIM	-40 to 125	V5618A	Samples

(1) The marketing status values are defined as follows:
ACTIVE: Product device recommended for new designs.
LIFEBUY: TI has announced that the device will be discontinued, and a lifetime-buy period is in effect.
NRND: Not recommended for new designs. Device is in production to support existing customers, but TI does not recommend using this part in a new design.
PREVIEW: Device has been announced but is not in production. Samples may or may not be available.
OBSOLETE: TI has discontinued the production of the device.

(2) **RoHS:** TI defines "RoHS" to mean semiconductor products that are compliant with the current EU RoHS requirements for all 10 RoHS substances, including the requirement that RoHS substance do not exceed 0.1% by weight in homogeneous materials. Where designed to be soldered at high temperatures, "RoHS" products are suitable for use in specified lead-free processes. TI may reference these types of products as "Pb-Free".
RoHS Exempt: TI defines "RoHS Exempt" to mean products that contain lead but are compliant with EU RoHS pursuant to a specific EU RoHS exemption.
Green: TI defines "Green" to mean the content of Chlorine (Cl) and Bromine (Br) based flame retardants meet JS709B low halogen requirements of <=1000ppm threshold. Antimony trioxide based flame retardants must also meet the <=1000ppm threshold requirement.

(3) MSL, Peak Temp. - The Moisture Sensitivity Level rating according to the JEDEC industry standard classifications, and peak solder temperature.

(4) There may be additional marking, which relates to the logo, the lot trace code information, or the environmental category on the device.

(5) Multiple Device Markings will be inside parentheses. Only one Device Marking contained in parentheses and separated by a "~" will appear on a device. If a line is indented then it is a continuation of the previous line and the two combined represent the entire Device Marking for that device.

(6) Lead finish/Ball material - Orderable Devices may have multiple material finish options. Finish options are separated by a vertical ruled line. Lead finish/Ball material values may wrap to two lines if the finish value exceeds the maximum column width.

Important Information and Disclaimer: The information provided on this page represents TI's knowledge and belief as of the date that it is provided. TI bases its knowledge and belief on information provided by third parties, and makes no representation or warranty as to the accuracy of such information. Efforts are underway to better integrate information from third parties. TI has taken and continues to take reasonable steps to provide representative and accurate information but may not have conducted destructive testing or chemical analysis on incoming materials and chemicals. TI and TI suppliers consider certain information to be proprietary, and thus CAS numbers and other limited information may not be available for release.

In no event shall TI's liability arising out of such information exceed the total purchase price of the TI part(s) at issue in this document sold by TI to Customer on an annual basis.

OTHER QUALIFIED VERSIONS OF TLV5618A, TLV5618AM :

- Catalog : TLV5618A

- Enhanced Product : TLV5618A-EP, TLV5618A-EP
- Military : TLV5618AM

NOTE: Qualified Version Definitions:

- Catalog - TI's standard catalog product
- Enhanced Product - Supports Defense, Aerospace and Medical Applications
- Military - QML certified for Military and Defense Applications

TAPE AND REEL INFORMATION

REEL DIMENSIONS

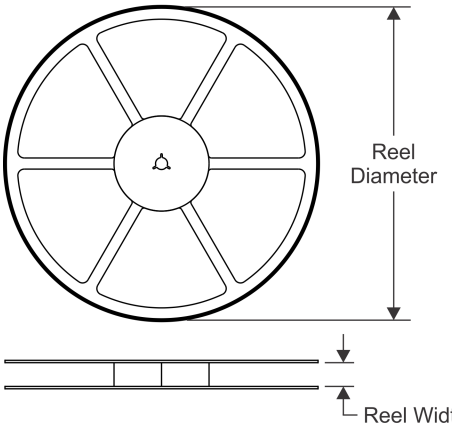

TAPE DIMENSIONS

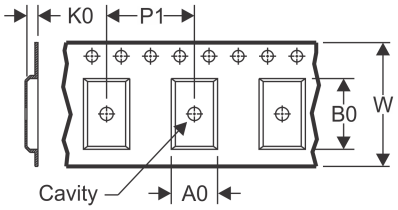

A0	Dimension designed to accommodate the component width
B0	Dimension designed to accommodate the component length
K0	Dimension designed to accommodate the component thickness
W	Overall width of the carrier tape
P1	Pitch between successive cavity centers

QUADRANT ASSIGNMENTS FOR PIN 1 ORIENTATION IN TAPE

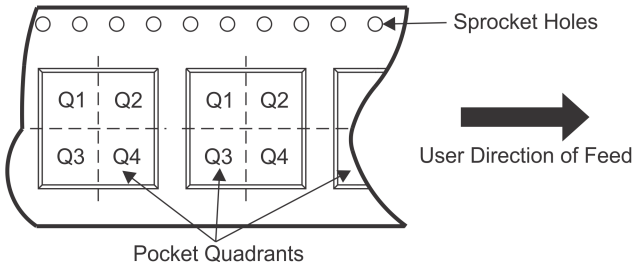

*All dimensions are nominal

Device	Package Type	Package Drawing	Pins	SPQ	Reel Diameter (mm)	Reel Width W1 (mm)	A0 (mm)	B0 (mm)	K0 (mm)	P1 (mm)	W (mm)	Pin1 Quadrant
TLV5618ACDR	SOIC	D	8	2500	330.0	12.4	6.4	5.2	2.1	8.0	12.0	Q1
TLV5618AIDR	SOIC	D	8	2500	330.0	12.4	6.4	5.2	2.1	8.0	12.0	Q1
TLV5618AQDR	SOIC	D	8	2500	330.0	12.4	6.4	5.2	2.1	8.0	12.0	Q1

TAPE AND REEL BOX DIMENSIONS

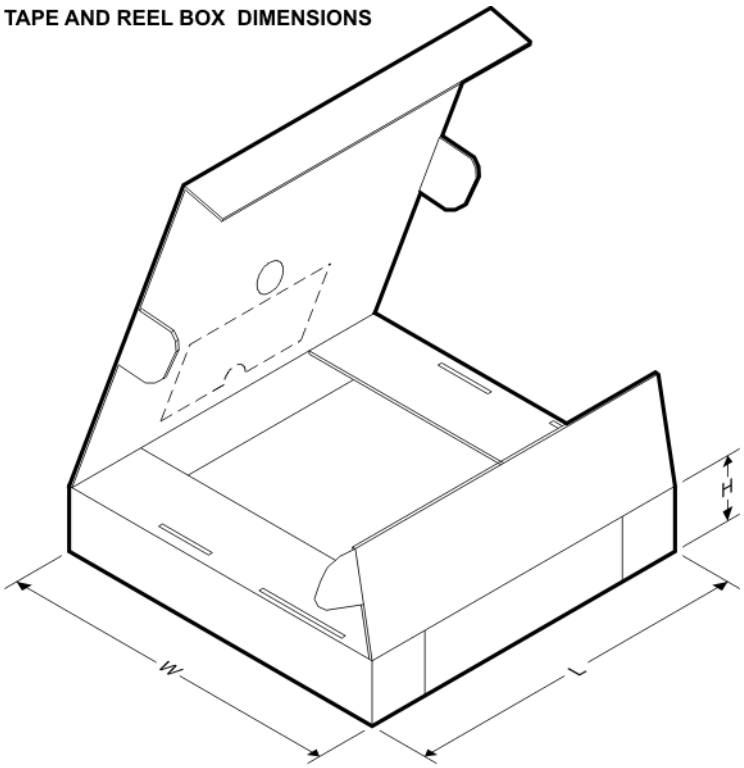

*All dimensions are nominal

Device	Package Type	Package Drawing	Pins	SPQ	Length (mm)	Width (mm)	Height (mm)
TLV5618ACDR	SOIC	D	8	2500	350.0	350.0	43.0
TLV5618AIDR	SOIC	D	8	2500	350.0	350.0	43.0
TLV5618AQDR	SOIC	D	8	2500	350.0	350.0	43.0

TUBE

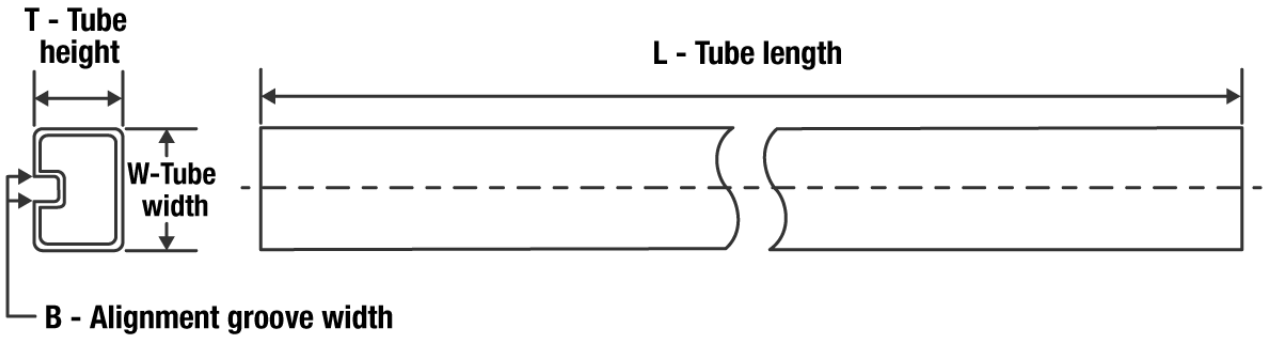

*All dimensions are nominal

Device	Package Name	Package Type	Pins	SPQ	L (mm)	W (mm)	T (µm)	B (mm)
5962-9955701Q2A	FK	LCCC	20	1	506.98	12.06	2030	NA
TLV5618ACD	D	SOIC	8	75	505.46	6.76	3810	4
TLV5618ACDG4	D	SOIC	8	75	505.46	6.76	3810	4
TLV5618ACP	P	PDIP	8	50	506	13.97	11230	4.32
TLV5618AID	D	SOIC	8	75	505.46	6.76	3810	4
TLV5618AIDG4	D	SOIC	8	75	505.46	6.76	3810	4
TLV5618AIP	P	PDIP	8	50	506	13.97	11230	4.32
TLV5618AIPE4	P	PDIP	8	50	506	13.97	11230	4.32
TLV5618AMFKB	FK	LCCC	20	1	506.98	12.06	2030	NA
TLV5618AQD	D	SOIC	8	75	505.46	6.76	3810	4
TLV5618AQDG4	D	SOIC	8	75	505.46	6.76	3810	4

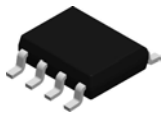

PACKAGE OUTLINE

D0008A

SOIC - 1.75 mm max height

SMALL OUTLINE INTEGRATED CIRCUIT

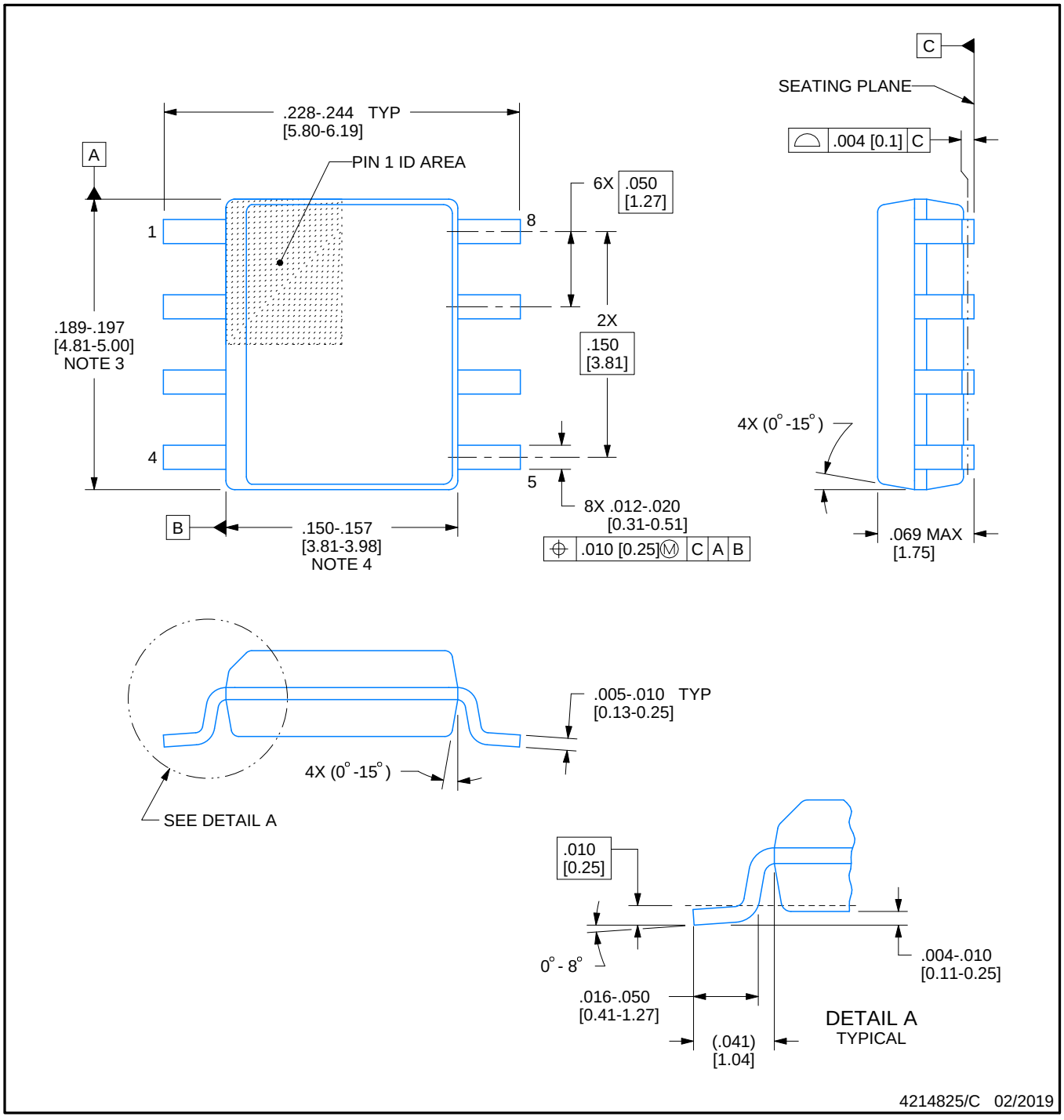

NOTES:

1. Linear dimensions are in inches [millimeters]. Dimensions in parenthesis are for reference only. Controlling dimensions are in inches. Dimensioning and tolerancing per ASME Y14.5M.
2. This drawing is subject to change without notice.
3. This dimension does not include mold flash, protrusions, or gate burrs. Mold flash, protrusions, or gate burrs shall not exceed .006 [0.15] per side.
4. This dimension does not include interlead flash.
5. Reference JEDEC registration MS-012, variation AA.

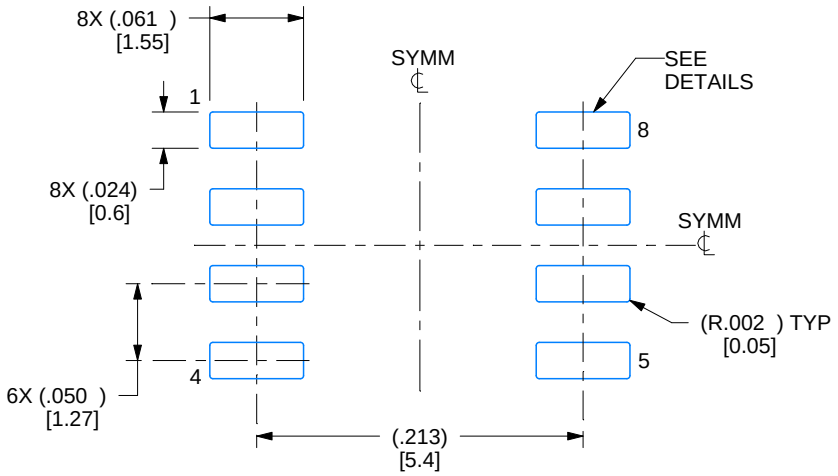

LAND PATTERN EXAMPLE
EXPOSED METAL SHOWN
SCALE:8X

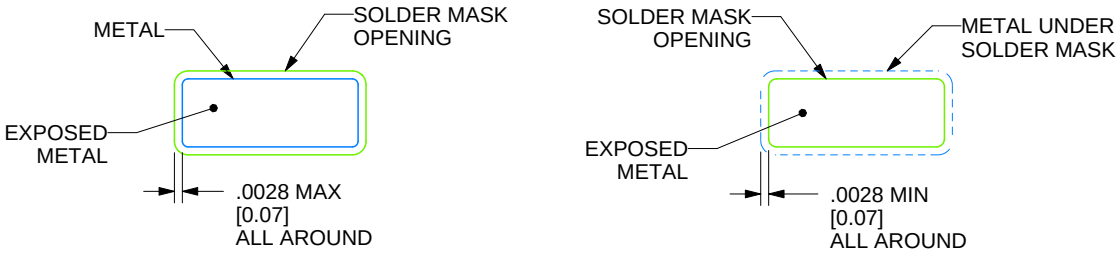

SOLDER MASK DETAILS

4214825/C 02/2019

NOTES: (continued)

6. Publication IPC-7351 may have alternate designs.
7. Solder mask tolerances between and around signal pads can vary based on board fabrication site.

EXAMPLE STENCIL DESIGN

D0008A

SOIC - 1.75 mm max height

SMALL OUTLINE INTEGRATED CIRCUIT

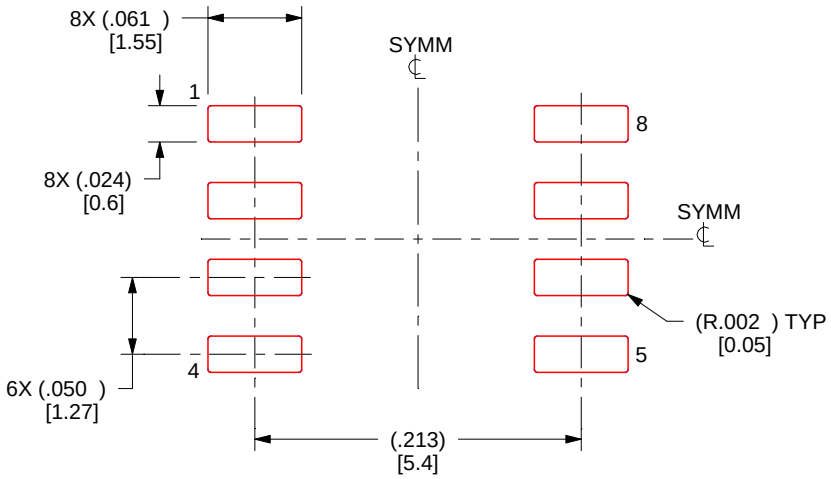

SOLDER PASTE EXAMPLE
BASED ON .005 INCH [0.125 MM] THICK STENCIL
SCALE:8X

4214825/C 02/2019

NOTES: (continued)

8. Laser cutting apertures with trapezoidal walls and rounded corners may offer better paste release. IPC-7525 may have alternate design recommendations.
9. Board assembly site may have different recommendations for stencil design.

MCER001A – JANUARY 1995 – REVISED JANUARY 1997

JG (R-GDIP-T8) **CERAMIC DUAL-IN-LINE**

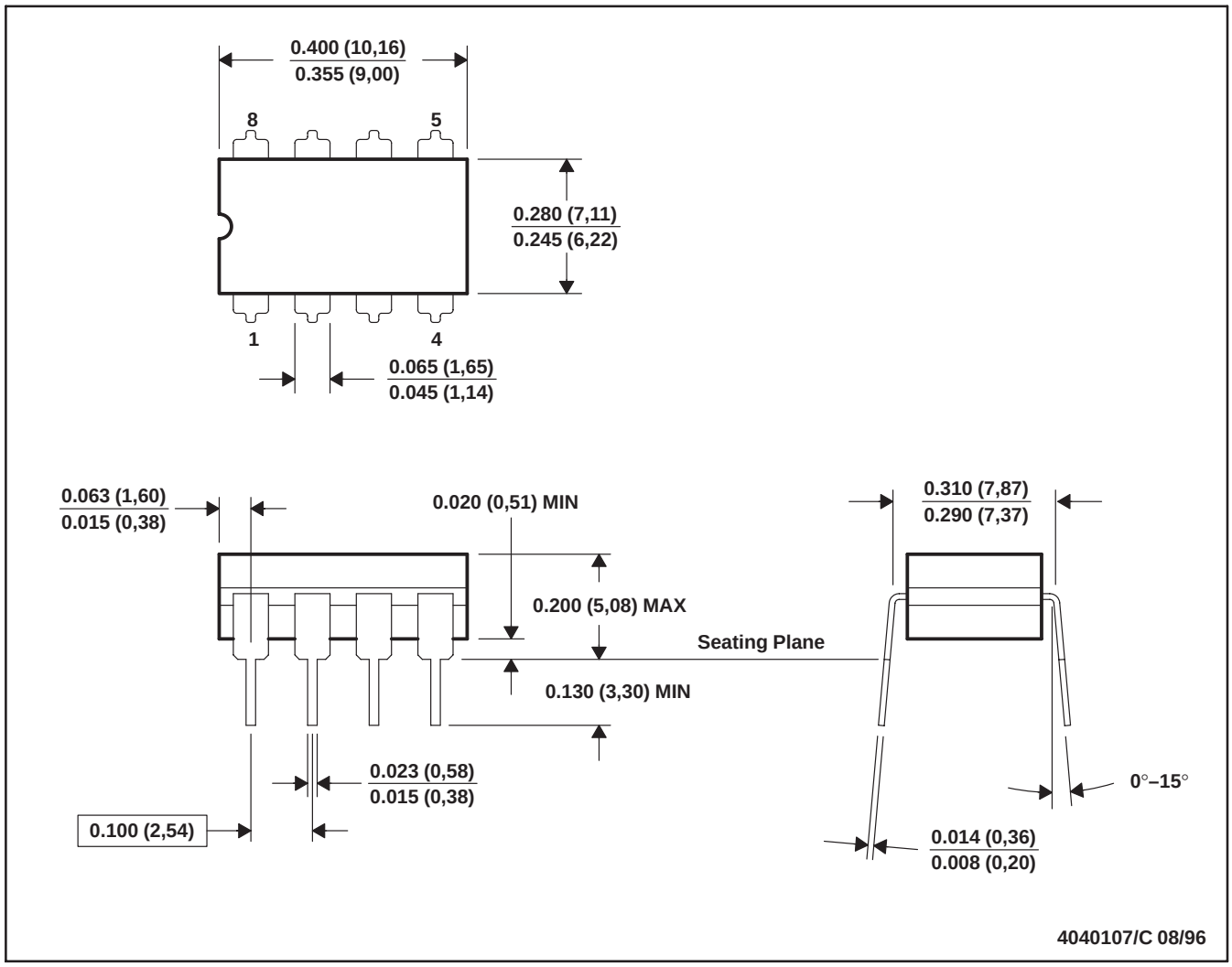

NOTES: A. All linear dimensions are in inches (millimeters).
B. This drawing is subject to change without notice.
C. This package can be hermetically sealed with a ceramic lid using glass frit.
D. Index point is provided on cap for terminal identification.
E. Falls within MIL STD 1835 GDIP1-T8

P (R–PDIP–T8) PLASTIC DUAL–IN–LINE PACKAGE

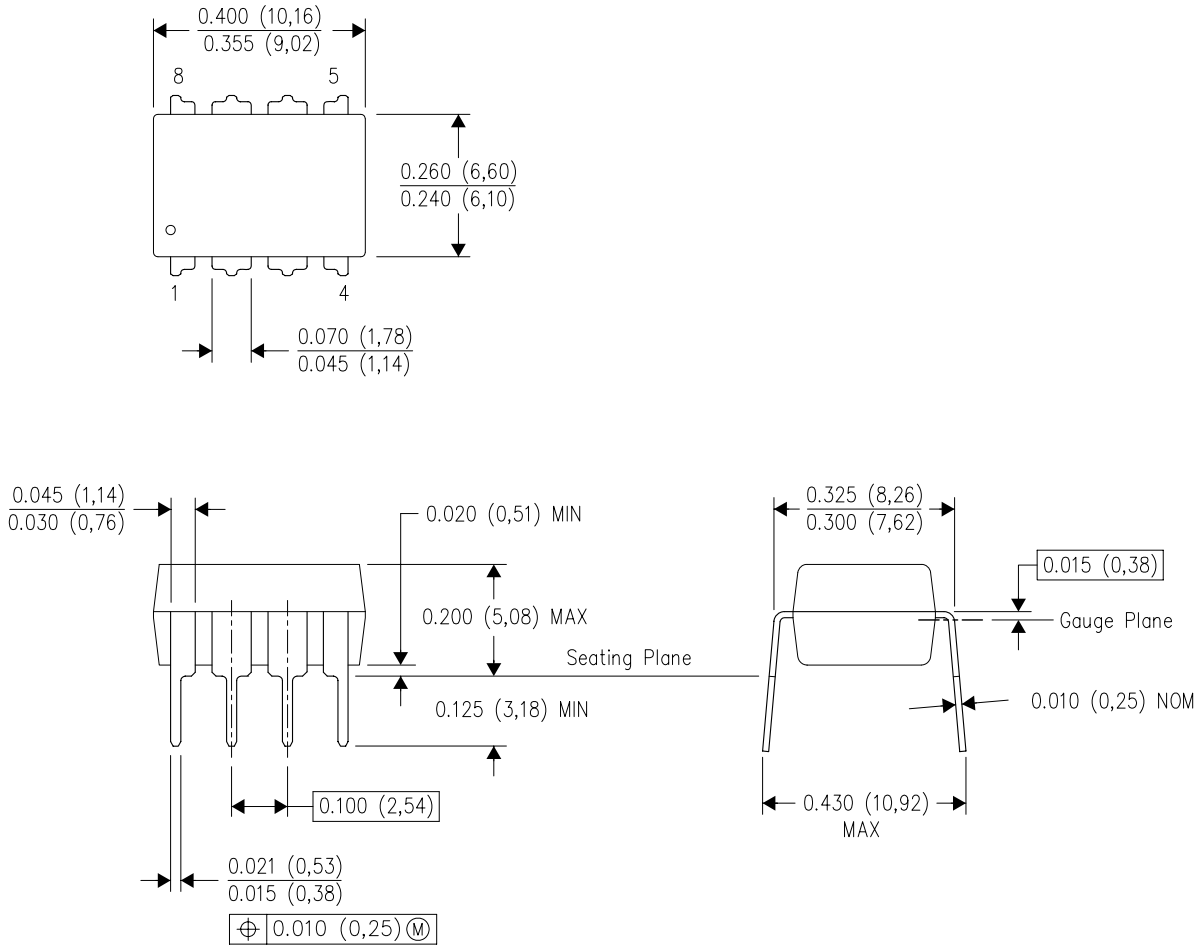

NOTES:
A. All linear dimensions are in inches (millimeters).
B. This drawing is subject to change without notice.
C. Falls within JEDEC MS–001 variation BA.

FK (S–CQCC–N**) LEADLESS CERAMIC CHIP CARRIER

28 TERMINAL SHOWN

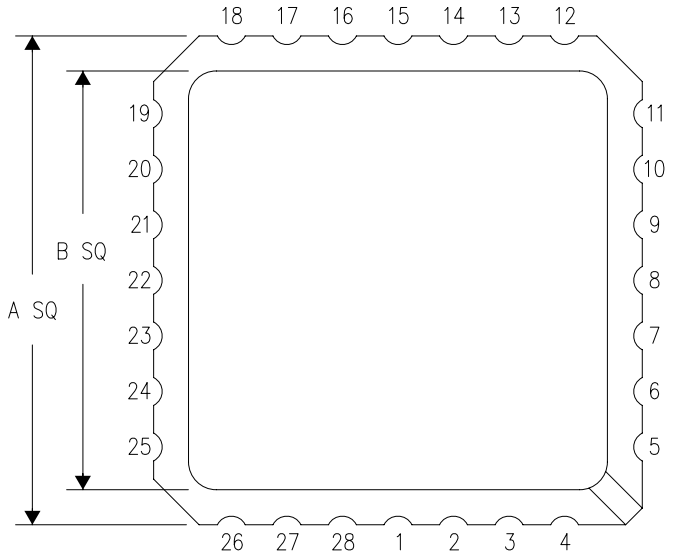

NO. OF TERMINALS **	A		B	
	MIN	MAX	MIN	MAX
20	0.342 (8,69)	0.358 (9,09)	0.307 (7,80)	0.358 (9,09)
28	0.442 (11,23)	0.458 (11,63)	0.406 (10,31)	0.458 (11,63)
44	0.640 (16,26)	0.660 (16,76)	0.495 (12,58)	0.560 (14,22)
52	0.740 (18,78)	0.761 (19,32)	0.495 (12,58)	0.560 (14,22)
68	0.938 (23,83)	0.962 (24,43)	0.850 (21,6)	0.858 (21,8)
84	1.141 (28,99)	1.165 (29,59)	1.047 (26,6)	1.063 (27,0)

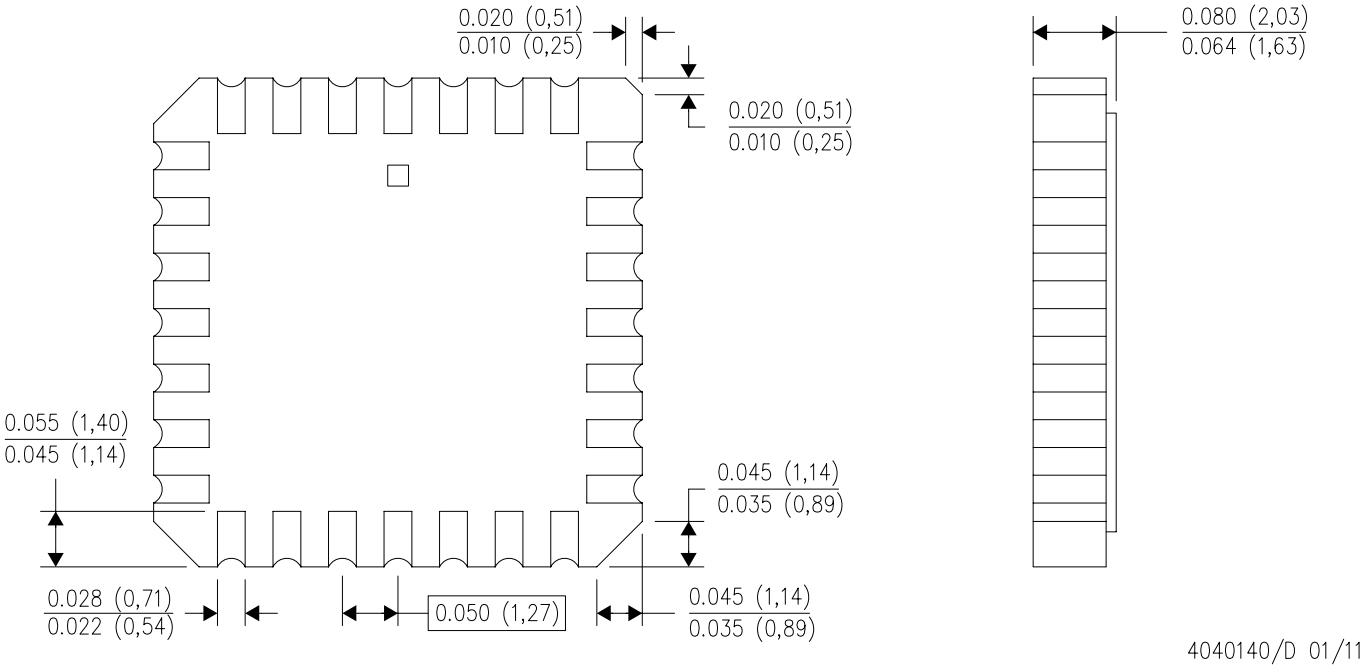

4040140/D 01/11

NOTES:
A. All linear dimensions are in inches (millimeters).
B. This drawing is subject to change without notice.
C. This package can be hermetically sealed with a metal lid.
D. Falls within JEDEC MS–004

IMPORTANT NOTICE AND DISCLAIMER

TI PROVIDES TECHNICAL AND RELIABILITY DATA (INCLUDING DATA SHEETS), DESIGN RESOURCES (INCLUDING REFERENCE DESIGNS), APPLICATION OR OTHER DESIGN ADVICE, WEB TOOLS, SAFETY INFORMATION, AND OTHER RESOURCES “AS IS” AND WITH ALL FAULTS, AND DISCLAIMS ALL WARRANTIES, EXPRESS AND IMPLIED, INCLUDING WITHOUT LIMITATION ANY IMPLIED WARRANTIES OF MERCHANTABILITY, FITNESS FOR A PARTICULAR PURPOSE OR NON-INFRINGEMENT OF THIRD PARTY INTELLECTUAL PROPERTY RIGHTS.

These resources are intended for skilled developers designing with TI products. You are solely responsible for (1) selecting the appropriate TI products for your application, (2) designing, validating and testing your application, and (3) ensuring your application meets applicable standards, and any other safety, security, regulatory or other requirements.

These resources are subject to change without notice. TI grants you permission to use these resources only for development of an application that uses the TI products described in the resource. Other reproduction and display of these resources is prohibited. No license is granted to any other TI intellectual property right or to any third party intellectual property right. TI disclaims responsibility for, and you will fully indemnify TI and its representatives against, any claims, damages, costs, losses, and liabilities arising out of your use of these resources.

TI’s products are provided subject to TI’s Terms of Sale or other applicable terms available either on ti.com or provided in conjunction with such TI products. TI’s provision of these resources does not expand or otherwise alter TI’s applicable warranties or warranty disclaimers for TI products.

TI objects to and rejects any additional or different terms you may have proposed.

Mailing Address: Texas Instruments, Post Office Box 655303, Dallas, Texas 75265
Copyright © 2022, Texas Instruments Incorporated