TMPx75 具有 I²C 和 SMBus 接口的温度传感器（采用行业标准 LM75 尺寸和引脚）

1 特性

- TMP175：27 个地址
- TMP75：8 个地址，NIST 可追溯
- 数字输出：与 SMBus™、两线制和 I²C 接口兼容
- 分辨率：9 至 12 位，用户可选
- 精度：
  - -40 °C 至 +125 °C 范围内为 ±1 °C（典型值）
  - -40 °C 至 +125 °C 范围内为 ±2 °C（最大值）
- 低静态电流：50 µA，0.1 µA（待机）
- 宽电源电压范围：2.7V 至 5.5V
- 小型 8 引脚微型小外形尺寸 (MSOP) 封装和 8 引脚小外形集成电路 (SOIC) 封装

2 应用

- 电源温度监控
- 计算机外设过热保护
- 笔记本电脑
- 手机
- 电池管理
- 办公机器
- 恒温器控制
- 环境监测和供热通风与空气调节 (HVAC)
- 机电器件温度

TMP175 和 TMP75 内部框图

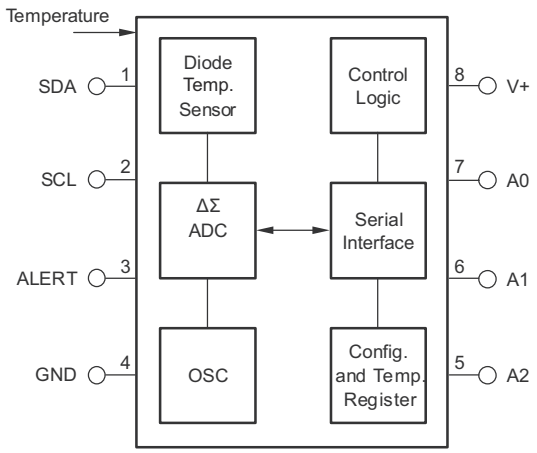

3 说明

TMP75 和 TMP175 器件属于数字温度传感器，是负温度系数 (NTC) 和正温度系数 (PTC) 热敏电阻的理想替代产品。该器件无需校准或外部组件信号调节即可提供典型值为 ±1 °C 的精度。器件温度传感器为高度线性化产品，无需复杂计算或查表即可得知温度。片上 12 位模数转换器 (ADC) 具备低至 0.0625°C 的分辨率。此器件提供业界通用的 LM75 SOIC-8 和 MSOP-8 外形尺寸。

TMP175 和 TMP75 与 SMBus、两线制和 I²C 接口兼容。TMP175 器件可与多达 27 个器件共用一根总线。TMP75 可与多达八个器件共用一根总线。TMP175 和 TMP75 都具有 SMBus 警报功能。

TMP175 和 TMP75 器件适用于在通信、计算机、消费类、环境、工业和仪器等各种应用中进行扩展温度测量。

TMP175 和 TMP75 器件的额定工作温度范围为 -40 °C 至 +125 °C。

TMP75 生产单元已完全通过可追溯 NIST 的传感器测试，并且已借助可追溯 NIST 的设备使用 ISO/IEC 17025 标准认可的校准进行验证。

器件信息(1)

器件型号	封装	封装尺寸（标称值）
TMPx75	SOIC (8)	4.90mm × 3.91mm
	VSSOP (8)	3.00mm × 3.00mm

(1) 如需了解所有可用封装，请参阅数据表末尾的可订购产品附录。

本文档旨在为方便起见，提供有关 TI 产品中文版本的信息，以确认产品的概要。有关适用的官方英文版本的最新信息，请访问 www.ti.com，其内容始终优先。TI 不保证翻译的准确性和有效性。在实际设计之前，请务必参考最新版本的英文版本。
English Data Sheet: SBOS288

Table of Contents

1 特性 ... 1
2 应用 ... 1
3 说明 ... 1
4 Revision History ... 2
5 Pin Configuration and Functions ... 4
6 Specifications ... 5
6.1 Absolute Maximum Ratings ... 5
6.2 ESD Ratings ... 5
6.3 Recommended Operating Conditions ... 5
6.4 Thermal Information ... 5
6.5 Electrical Characteristics ... 6
6.6 I^2C Interface Timing ... 7
6.7 Typical Characteristics ... 8
7 Detailed Description ... 9
7.1 Overview ... 9
7.2 Functional Block Diagram ... 9
7.3 Feature Description ... 10
7.4 Device Functional Modes ... 16
7.5 Programming ... 17
8 Application and Implementation ... 22
8.1 Application Information ... 22
8.2 Typical Application ... 22
9 Power Supply Recommendations ... 24
10 Layout ... 24
10.1 Layout Guidelines ... 24
10.2 Layout Example ... 24
11 Device and Documentation Support ... 25
11.1 接收文档更新通知 ... 25
11.2 支持资源 ... 25
11.3 Trademarks ... 25
11.4 静电放电警告 ... 25
11.5 术语表 ... 25
12 Mechanical, Packaging, and Orderable Information ... 25

4 Revision History

Changes from Revision L (December 2015) to Revision M (October 2020) — **Page**

- 更新了整个文档中的表格、图和交叉参考的编号格式 ... 1
- Changed Absolute maximum Supply voltage of TMP75 from 7 V to 6.5 V ... 5
- Added applicable pins to Input voltage specification ... 5
- Changed Absolute maximum Input Voltage of TMP75 on SCL, SDA, A0, and A1 pins from 7 V to 6.5 V ... 5
- Changed Absolute maximum of TMP75 A2 pin voltage from 7 V to (V+)+0.3 ... 5
- Removed ESD Machine Model specification from TMP75 ... 5
- Updated TMP75 D and DGK package Thermal Information ... 5
- Updated TMP175 D package Thermal Information ... 5
- Added register settings to Conversion time specification for clarity ... 6
- Changed minimum Data setup specification time from 10 ns to 20 ns ... 7
- Moved Timeout specification to I2C Interface Timing table ... 7
- Changed TMP75 Timeout specification minimum from 25 to 20 ... 7
- Changed TMP75 Timeout specification maximum from 74 to 30 ... 7
- Removed BYTE column from the *Configuration Register* table ... 18
- Changed TMP75 consecutive fault setting F[1:0] = 11 from 6 to 4 and F[1:0] = 10 from 4 to 3. ... 19
- Added behavior clarification when changing thermostat modes on TMP75 ... 20
- Changed bypass capacitor recommendation from 0.1 μF to 0.01 μF ... 22
- Updated recommened pull-up resistor size to standard 4.7 kΩ ... 22
- Removed *Related Links* section ... 25
- Added *Receiving Notification of Documentation Updates* section ... 25

Changes from Revision K (April 2015) to Revision L (December 2015) — **Page**

- 更改了第二个特性要点：为 TMP75 器件添加了 NIST 可追溯传感器 ... 1
- 向*说明*部分添加了最后一段 ... 1
- 删除了第 1 页上的*简化版原理图* ... 1
- Changed 图 7-1 ... 14

Copyright © 2021 Texas Instruments Incorporated

Changes from Revision J (December 2007) to Revision K (April 2015) **Page**

- 添加了 *ESD 等级* 表、*特性说明* 部分、*器件功能模式*、*应用和实现* 部分、*电源相关建议* 部分、*布局* 部分、*器件和文档支持* 部分以及*机械、封装和可订购信息* 部分。 1

5 Pin Configuration and Functions

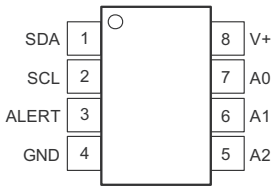

NOTE: Pin 1 is determined by orienting the package marking as indicated in the diagram.

图 5-1. DGK and D Packages 8-Pin VSSOP and SOIC Top View

表 5-1. Pin Functions

PIN		I/O	DESCRIPTION
NO.	NAME		
1	SDA	I/O	Serial data. Open-drain output; requires a pullup resistor.
2	SCL	I	Serial clock. Open-drain output; requires a pullup resistor.
3	ALERT	O	Overtemperature alert. Open-drain output; requires a pullup resistor.
4	GND	—	Ground
5	A2	I	Address select. Connect to GND, V+ or (for the TMP175 device only) leave these pins floating.
6	A1		
7	A0		
8	V+	I	Supply voltage, 2.7 V to 5.5 V

Copyright © 2021 Texas Instruments Incorporated

6 Specifications

6.1 Absolute Maximum Ratings

Over free-air temperature range unless otherwise noted[(1)]

		MIN	MAX	UNIT
Power Supply, V+	TMP175		7	V
	TMP75		6.5	V
Input voltage	TMP175, SCL, SDA, A2, A1, A0	-0.5	7	V
	TMP75 SCL, SDA, A1, A0	-0.3	6.5	V
	TMP75 A2 pin	-0.3	(V+) +0.3	V
Input current	TMP175		10	mA
Operating Temperature		-55	127	°C
Operating junction temperature, T_J			150	°C
Storage temperature, T_{stg}		-60	130	°C

(1) Stresses beyond those listed under *Absolute Maximum Ratings* may cause permanent damage to the device. These are stress ratings only, which do not imply functional operation of the device at these or any other conditions beyond those indicated under *Recommended Operating Conditions*. Exposure to absolute-maximum-rated conditions for extended periods may affect device reliability.

6.2 ESD Ratings

			VALUE	UNIT
$V_{(ESD)}$	Electrostatic discharge	Human-body model (HBM), per ANSI/ESDA/JEDEC JS-001[(1)]	±4000	V
		Charged-device model (CDM), per JEDEC specification JESD22-C101[(2)]	±1000	
	Electrostatic discharge (TMP175)	Machine model (MM)	±300	

(1) JEDEC document JEP155 states that 500-V HBM allows safe manufacturing with a standard ESD control process.
(2) JEDEC document JEP157 states that 250-V CDM allows safe manufacturing with a standard ESD control process.

6.3 Recommended Operating Conditions

		MIN	NOM	MAX	UNIT
V+	Supply voltage	2.7		5.5	V
T_A	Operating ambient temperature	-40		125	°C

6.4 Thermal Information

THERMAL METRIC[(1)]		TMP75 DGK(VSSOP) 8-pins	TMP75 D(SOIC) 8-pins	TMP175 DGK(VSSOP) 8-pins	TMP175 D(SOIC) 8-pins	UNIT
$R_{\theta JA}$	Junction-to-ambient thermal resistance	202.5	130.4	185	130.4	°C/W
$R_{\theta JC(top)}$	Junction-to-case (top) thermal resistance	82	76.9	76.1	70.7	°C/W
$R_{\theta JB}$	Junction-to-board thermal resistance	124.4	72.3	106.4	73.9	°C/W
ψ_{JT}	Junction-to-top characterization parameter	17.9	32	14.1	21.6	°C/W
ψ_{JB}	Junction-to-board characterization parameter	122.6	71.9	104.8	73.1	°C/W
$R_{\theta JC(bot)}$	Junction-to-case (bottom) thermal resistance	—	—	—	—	°C/W
M_T	Thermal Mass	16.6	64.2	—	—	mJ/°C

(1) For more information about traditional and new thermal metrics, see the *IC Package Thermal Metrics* application report, SPRA953.

6.5 Electrical Characteristics

at T_A = –40 °C to +125 °C and V+ = 2.7 V to 5.5 V (unless otherwise noted); typical specification are at T_A = 25 °C and V+=3.3 V

PARAMETER		TEST CONDITIONS	TMP175			TMP75			UNIT
			MIN	TYP	MAX	MIN	TYP	MAX	
TEMPERATURE INPUT									
	Range		-40		125	–40		125	°C
T_{ERR}	Temperature accuracy	–25 °C to +85 °C		±0.5	±1.5		±0.5	±2	°C
T_{ERR}	Temperature accuracy	–40 °C to +125 °C		±1	±2		±1	±3	
PSR	Temperature accuracy (temperature error vs supply)			±200	±500		±200	±500	m °C/V
T_{RES}	Temperature resolution	Selectable		0.0625			0.0625		°C
DIGITAL INPUT/OUTPUT									
C_{IN}	Input capacitance			3			3		pF
V_{IH}	Input logic high level	SDA, SCL, A0, A1, A2	0.7(V+)		6	0.7(V+)		6	V
V_{IL}	Input logic low level	SDA, SCL, A0, A1, A2	–0.5		0.3(V+)	–0.5		0.3(V+)	V
I_{IN}	Input leakage current	SDA, SCL, A0, A1, A2			1			1	µA
HYST	Hysteresis	SDA, SCL		500			500		mV
V_{OL}	Low-level output logic SDA	I_{OL} = 3 mA	0	0.15	0.4	0	0.15	0.4	V
V_{OL}	Low-level output logic ALERT	I_{OL} = 4 mA	0	0.15	0.4	0	0.15	0.4	V
	Resolution	Selectable	9		12	9		12	Bits
	Conversion time	R1 = 0, R0 = 0; 9-bit		27.5	37.5		27.5	37.5	ms
		R1 = 0, R0 = 1; 10-bit		55	75		55	75	
		R1 = 1, R0 = 0 11-bit		110	150		110	150	
		R1 = 1, R0 = 1; 12-bit		220	300		220	300	
POWER SUPPLY									
	Operating Range		2.7		5.5	2.7		5.5	V
I_{DD_AVG}	Average current consumption	Serial bus inactive		50	85		50	85	µA
		Serial bus active, SCL frequency = 400 kHz		100			100		
		Serial bus active, SCL frequency = 3.4 MHz		410			410		
I_{DD_SD}	Shutdown current	Serial bus inactive		0.1	3		0.1	3	µA
		Serial bus active, SCL frequency = 400 kHz		60			60		
		Serial bus active, SCL frequency = 3.4 MHz		380			380		

Copyright © 2021 Texas Instruments Incorporated

6.6 I²C Interface Timing

see the Timing Diagrams and Two-Wire Timing Diagrams sections for additional information (unless otherwise noted)[1]

		FAST MODE		HIGH-SPEED MODE		UNIT
		MIN	MAX	MIN	MAX	
$f_{(SCL)}$	SCL operating frequency	1	400	1	2380	kHz
$t_{(BUF)}$	Bus-free time between STOP and START conditions	1.3		0.16		µs
$t_{(SUSTA)}$	Repeated START condition setup time	0.6		0.16		µs
$t_{(HDSTA)}$	Hold time after repeated START condition. After this period, the first clock is generated.	0.6		0.16		µs
$t_{(SUSTO)}$	STOP condition setup time	0.6		0.16		µs
$t_{(HDDAT)}$	Data hold time	4	900	4	120	ns
$t_{(SUDAT)}$	Data setup time	100		20		ns
$t_{(LOW)}$	SCL clock low period	1.3		0.28		µs
$t_{(HIGH)}$	SCL clock high period	0.6		0.06		µs
t_{RC}	Clock rise time		300		40	ns
t_{RC}	Clock rise time for SCLK ≤ 100 kHz		1000			ns
t_F	Clock fall time		300		40	ns
$t_{timeout}$	Timeout (SCL = GND or SDA = GND) TMP175	25	74	25	74	ms
$t_{timeout}$	Timeout (SCL = GND or SDA = GND) TMP75	20	30	20	30	

(1) Compatible with standard mode timings

6.7 Typical Characteristics

at T_A = 25 °C and V+ = 5 V (unless otherwise noted)

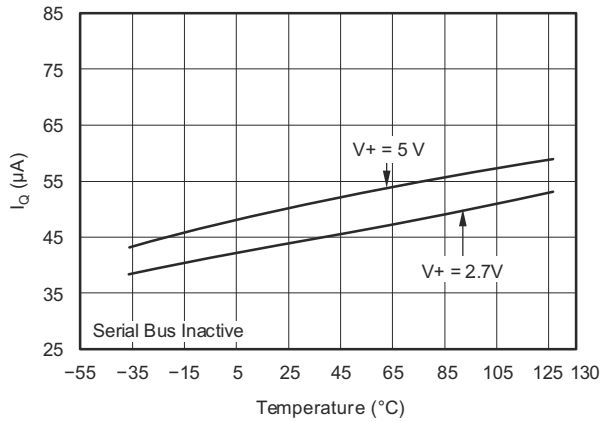

图 6-1. Quiescent Current vs Temperature

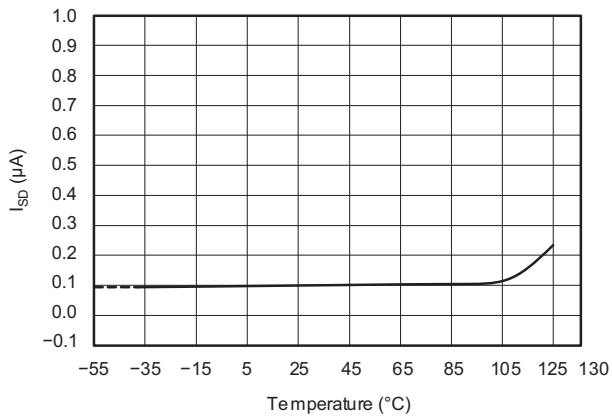

图 6-2. Shutdown Current vs Temperature

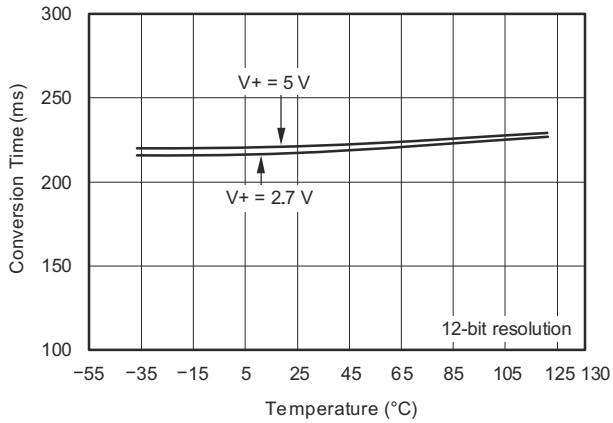

图 6-3. Conversion Time vs Temperature

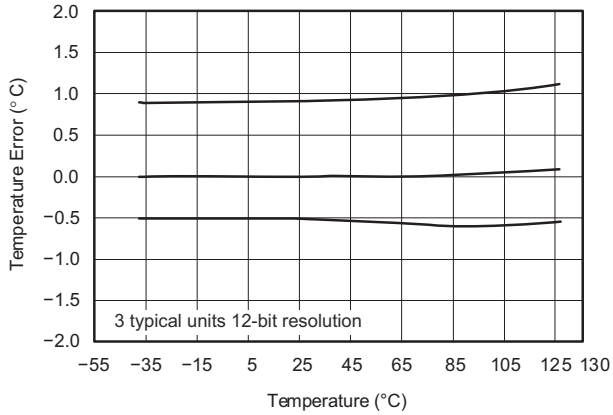

图 6-4. Temperature Accuracy vs Temperature

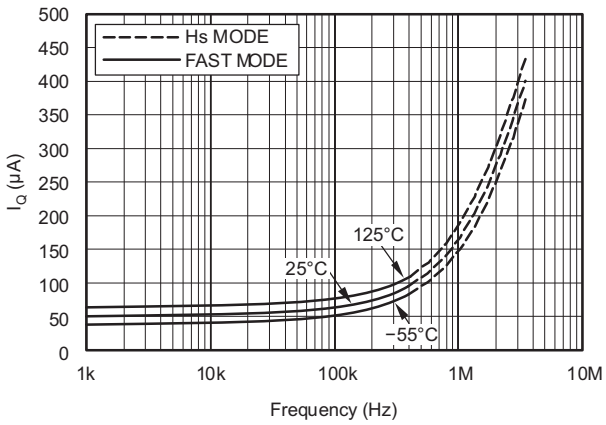

图 6-5. Quiescent Current With Bus Activity vs Temperature

Copyright © 2021 Texas Instruments Incorporated

7 Detailed Description

7.1 Overview

The TMP175 and TMP75 devices are digital temperature sensors that are optimal for thermal management and thermal protection applications. The TMP175 and TMP75 are two-wire, SMBus, and I^2C interface-compatible. The devices are specified over a temperature range of −40 °C to +125 °C. The *Functional Block Diagram* section shows an internal block diagram of TMP175 and TMP75 devices.

The temperature sensor in the TMP175 and TMP75 devices is the device itself. Thermal paths run through the package leads as well as the plastic package. The package leads provide the primary thermal path because of the lower thermal resistance of the metal.

7.2 Functional Block Diagram

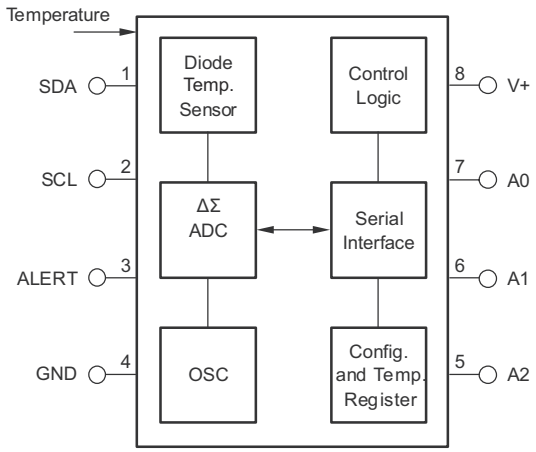

7.3 Feature Description

7.3.1 Digital Temperature Output

The digital output from each temperature measurement conversion is stored in the read-only Temperature register. The Temperature register of the TMP175 or TMP75 is a 12-bit read-only register that stores the output of the most recent conversion. Two bytes must be read to obtain data, and are listed in 表 7-6 and 表 7-7. The first 12 bits are used to indicate temperature with all remaining bits equal to zero. Data format for temperature is listed in 表 7-1. Negative numbers are represented in binary twos complement format. Following power-up or reset, the Temperature register reads 0 °C until the first conversion is complete.

The user can obtain 9, 10, 11, or 12 bits of resolution by addressing the Configuration register and setting the resolution bits accordingly. For 9-, 10-, or 11-bit resolution, the most significant bits (MSBs) in the Temperature register are used with the unused least significant bits (LSBs) set to zero.

表 7-1. Temperature Data Format

TEMPERATURE (°C)	DIGITAL OUTPUT	
	BINARY	HEX
128	0111 1111 1111	7FF
127.9375	0111 1111 1111	7FF
100	0110 0100 0000	640
80	0101 0000 0000	500
75	0100 1011 0000	4B0
50	0011 0010 0000	320
25	0001 1001 0000	190
0.25	0000 0000 0100	004
0	0000 0000 0000	000
– 0.25	1111 1111 1100	FFC
– 25	1110 0111 0000	E70
– 55	1100 1001 0000	C90

7.3.2 Serial Interface

The TMP175 and TMP75 operate only as slave devices on the SMBus, two-wire, and I^2C interface-compatible bus. Connections to the bus are made through the open-drain I/O lines SDA and SCL. The SDA and SCL pins feature integrated spike suppression filters and Schmitt triggers to minimize the effects of input spikes and bus noise. The TMP175 and TMP75 support the transmission protocol for fast (up to 400 kHz) and high-speed (up to 2 MHz) modes. All data bytes are transmitted MSB first.

7.3.2.1 Bus Overview

The device that initiates the transfer is called a *master*, and the devices controlled by the master are *slaves*. The bus must be controlled by a master device that generates the serial clock (SCL), controls the bus access, and generates the START and STOP conditions.

To address a specific device, a START condition is initiated, indicated by pulling the data line (SDA) from a high to low logic level when SCL is high. All slaves on the bus shift in the slave address byte, with the last bit indicating whether a read or write operation is intended. During the ninth clock pulse, the slave being addressed responds to the master by generating an Acknowledge and pulling SDA low.

Data transfer is then initiated and sent over eight clock pulses followed by an Acknowledge bit. During data transfer SDA must remain stable when SCL is high because any change in SDA when SCL is high is interpreted as a control signal.

When all data are transferred, the master generates a STOP condition indicated by pulling SDA from low to high when SCL is high.

Copyright © 2021 Texas Instruments Incorporated

7.3.2.2 Serial Bus Address

To communicate with the TMP175 and TMP75, the master must first address slave devices through a slave address byte. The slave address byte consists of seven address bits, and a direction bit indicating the intent of executing a read or write operation.

The TMP175 features three address pins to allow up to 27 devices to be addressed on a single bus interface. 表 7-2 describes the pin logic levels used to properly connect up to 27 devices. A 1 indicates the pin is connected to the supply (VCC); a 0 indicates the pin is connected to GND; *float* indicates the pin is left unconnected. The state of pins A0, A1, and A2 is sampled on every bus communication and must be set prior to any activity on the interface.

The TMP75 features three address pins allowing up to eight devices to be connected per bus. Pin logic levels are described in 表 7-3. The address pins of the TMP175 and TMP75 are read after reset, at start of communication, or in response to a two-wire address acquire request. After the state of the pins are read, the address is latched to minimize power dissipation associated with detection.

表 7-2. Address Pins and Slave Addresses for the TMP175

A2	A1	A0	SLAVE ADDRESS
0	0	0	1001000
0	0	1	1001001
0	1	0	1001010
0	1	1	1001011
1	0	0	1001100
1	0	1	1001101
1	1	0	1001110
1	1	1	1001111
Float	0	0	1110000
Float	0	Float	1110001
Float	0	1	1110010
Float	1	0	1110011
Float	1	Float	1110100
Float	1	1	1110101
Float	Float	0	1110110
Float	Float	1	1110111
0	Float	0	0101000
0	Float	1	0101001
1	Float	0	0101010
1	Float	1	0101011
0	0	Float	0101100
0	1	Float	0101101
1	0	Float	0101110
1	1	Float	0101111
0	Float	Float	0110101
1	Float	Float	0110110
Float	Float	Float	0110111

表 7-3. Address Pins and Slave Addresses for the TMP75

A2	A1	A0	SLAVE ADDRESS
0	0	0	1001000
0	0	1	1001001
0	1	0	1001010
0	1	1	1001011
1	0	0	1001100
1	0	1	1001101
1	1	0	1001110
1	1	1	1001111

7.3.2.3 Writing and Reading to the TMP175 and TMP75

Accessing a particular register on the TMP175 and TMP75 devices is accomplished by writing the appropriate value to the Pointer register. The value for the Pointer register is the first byte transferred after the slave address byte with the R/W bit low. Every write operation to the TMP175 and TMP75 requires a value for the Pointer register (see 图 7-2).

When reading from the TMP175 and TMP75 devices, the last value stored in the Pointer register by a write operation is used to determine which register is read by a read operation. To change the register pointer for a read operation, a new value must be written to the Pointer register. This action is accomplished by issuing a slave address byte with the R/ $\overline{W}$ bit low, followed by the Pointer register byte. No additional data are required. The master can then generate a START condition and send the slave address byte with the R/ $\overline{W}$ bit high to initiate the read command. See 图 7-4 for details of this sequence. If repeated reads from the same register are desired, the Pointer register bytes do not have to be continually sent because the TMP175 and TMP75 remember the Pointer register value until the value is changed by the next write operation.

Register bytes are sent MSB first, followed by the LSB.

7.3.2.4 Slave Mode Operations

The TMP175 and TMP75 can operate as a slave receiver or slave transmitter.

7.3.2.4.1 Slave Receiver Mode

The first byte transmitted by the master is the slave address, with the R/ $\overline{W}$ bit low. The TMP175 or TMP75 then acknowledges reception of a valid address. The next byte transmitted by the master is the Pointer register. The TMP175 or TMP75 then acknowledges reception of the Pointer register byte. The next byte or bytes are written to the register addressed by the Pointer register. The TMP175 and TMP75 acknowledge reception of each data byte. The master can terminate data transfer by generating a START or STOP condition.

7.3.2.4.2 Slave Transmitter Mode

The first byte is transmitted by the master and is the slave address, with the R/ $\overline{W}$ bit high. The slave acknowledges reception of a valid slave address. The next byte is transmitted by the slave and is the most significant byte of the register indicated by the Pointer register. The master acknowledges reception of the data byte. The next byte transmitted by the slave is the least significant byte. The master acknowledges reception of the data byte. The master can terminate data transfer by generating a Not-Acknowledge on reception of any data byte, or generating a START or STOP condition.

7.3.2.5 SMBus Alert Function

The TMP175 and TMP75 support the SMBus Alert function. When the TMP75 and TMP175 are operating in interrupt mode (TM = 1), the ALERT pin of the TMP75 or TMP175 can be connected as an SMBus Alert signal. When a master senses that an ALERT condition is present on the ALERT line, the master sends an SMBus Alert command (00011001) on the bus. If the ALERT pin of the TMP75 or TMP175 is active, the devices acknowledge the SMBus Alert command and respond by returning its slave address on the SDA line. The eighth bit (LSB) of the slave address byte indicates if the temperature exceeding T_{HIGH} or falling below T_{LOW} caused the ALERT

Copyright © 2021 Texas Instruments Incorporated

condition. This bit is high if the temperature is greater than or equal to T_{HIGH}. This bit is low if the temperature is less than T_{LOW}. See 图 7-5 for details of this sequence.

If multiple devices on the bus respond to the SMBus Alert command, arbitration during the slave address portion of the SMBus Alert command determine which device clears its ALERT status. If the TMP75 or TMP175 wins the arbitration, its ALERT pin becomes inactive at the completion of the SMBus Alert command. If the TMP75 or TMP175 loses the arbitration, its ALERT pin remains active.

7.3.2.6 General Call

The TMP175 and TMP75 respond to a two-wire general call address (0000000) if the eighth bit is 0. The device acknowledges the general call address and responds to commands in the second byte. If the second byte is 00000100, the TMP175 and TMP75 latch the status of their address pins, but do not reset. If the second byte is 00000110, the TMP175 and TMP75 latch the status of their address pins and reset their internal registers to their power-up values.

7.3.2.7 High-Speed Mode

In order for the two-wire bus to operate at frequencies above 400 kHz, the master device must issue an Hs-mode master code (00001XXX) as the first byte after a START condition to switch the bus to high-speed operation. The TMP175 and TMP75 devices do not acknowledge this byte, but do switch their input filters on SDA and SCL and their output filters on SDA to operate in Hs-mode, allowing transfers at up to 2 MHz. After the Hs-mode master code is issued, the master transmits a two-wire slave address to initiate a data transfer operation. The bus continues to operate in Hs-mode until a STOP condition occurs on the bus. Upon receiving the STOP condition, the TMP175 and TMP75 switch the input and output filter back to fast-mode operation.

7.3.2.8 Time-out Function

The TMP175 resets the serial interface if either SCL or SDA is held low for 54 ms (typical) between a START and STOP condition. The TMP175 releases the bus if it is pulled low and waits for a START condition. To avoid activating the time-out function, a communication speed of at least 1 kHz must be maintained for the SCL operating frequency.

7.3.3 Timing Diagrams

The TMP175 and TMP75 devices are two-wire, SMBus, and I^2C interface-compatible. 图 7-1 to 图 7-5 describe the various operations on the TMP175. The following list provides bus definitions. Parameters for 图 7-1 are defined in the *I^2C Interface Timing*.

Bus Idle: Both SDA and SCL lines remain high.

Start Data Transfer: A change in the state of the SDA line, from high to low when the SCL line is high defines a START condition. Each data transfer is initiated with a START condition.

Stop Data Transfer: A change in the state of the SDA line from low to high when the SCL line is high defines a STOP condition. Each data transfer is terminated with a repeated START or STOP condition.

Data Transfer: The number of data bytes transferred between a START and a STOP condition is not limited and is determined by the master device. The receiver acknowledges the transfer of data.

Acknowledge: Each receiving device, when addressed, is obliged to generate an Acknowledge bit. A device that acknowledges must pull down the SDA line during the Acknowledge clock pulse in such a way that the SDA line is stable low during the high period of the Acknowledge clock pulse. Setup and hold times must be taken into account. On a master receive, the termination of the data transfer can be signaled by the master generating a Not-Acknowledge on the last byte that is transmitted by the slave.

Copyright © 2021 Texas Instruments Incorporated

7.3.4 Two-Wire Timing Diagrams

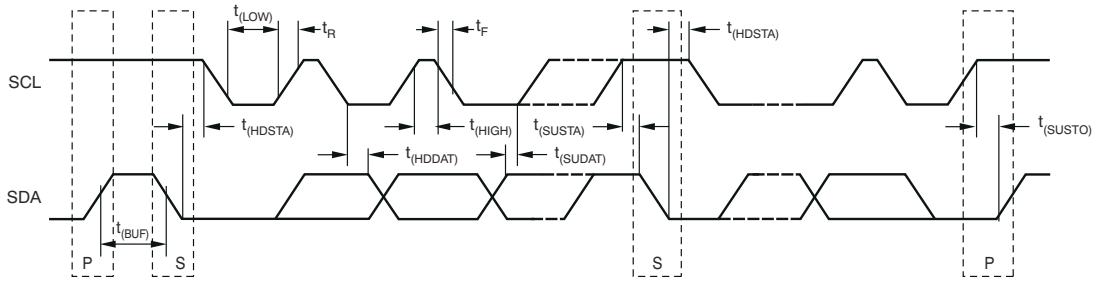

图 7-1. Two-Wire Timing Diagram

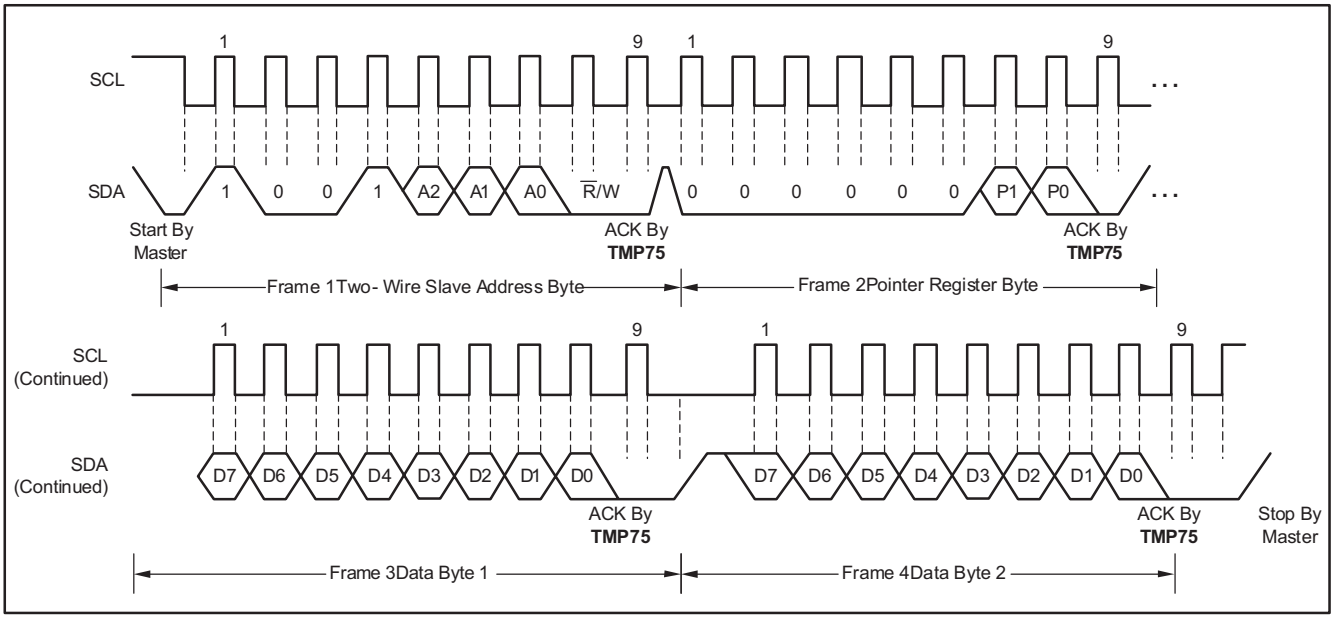

图 7-2. Two-Wire Timing Diagram for the TMP75 Write Word Format

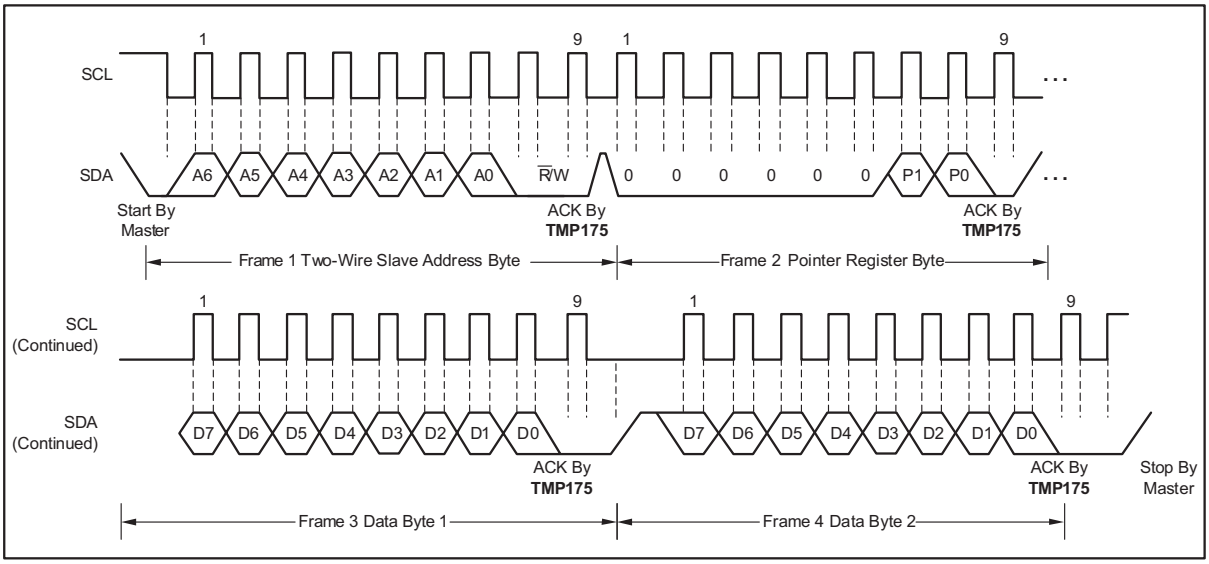

图 7-3. Two-Wire Timing Diagram for the TMP175 Write Word Format

Copyright © 2021 Texas Instruments Incorporated

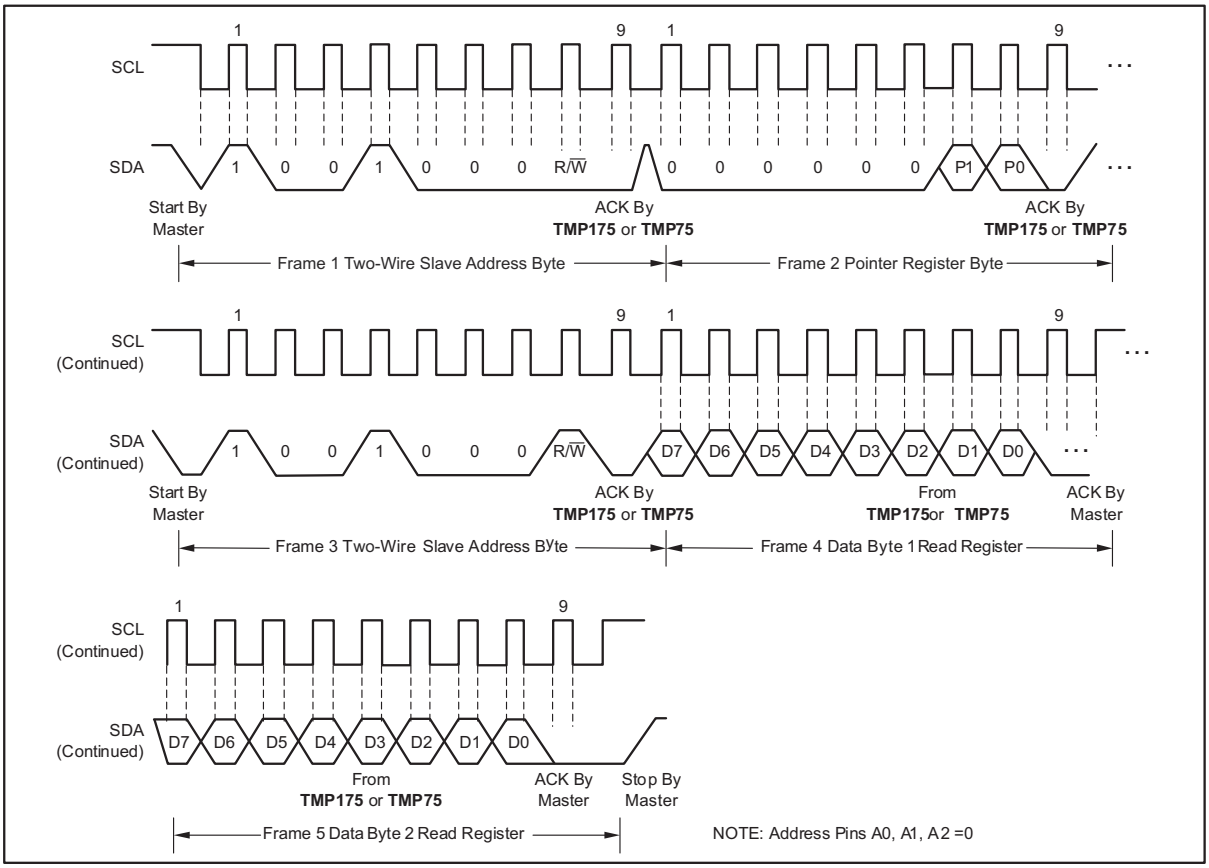

图 7-4. Two-Wire Timing Diagram for Read Word Format

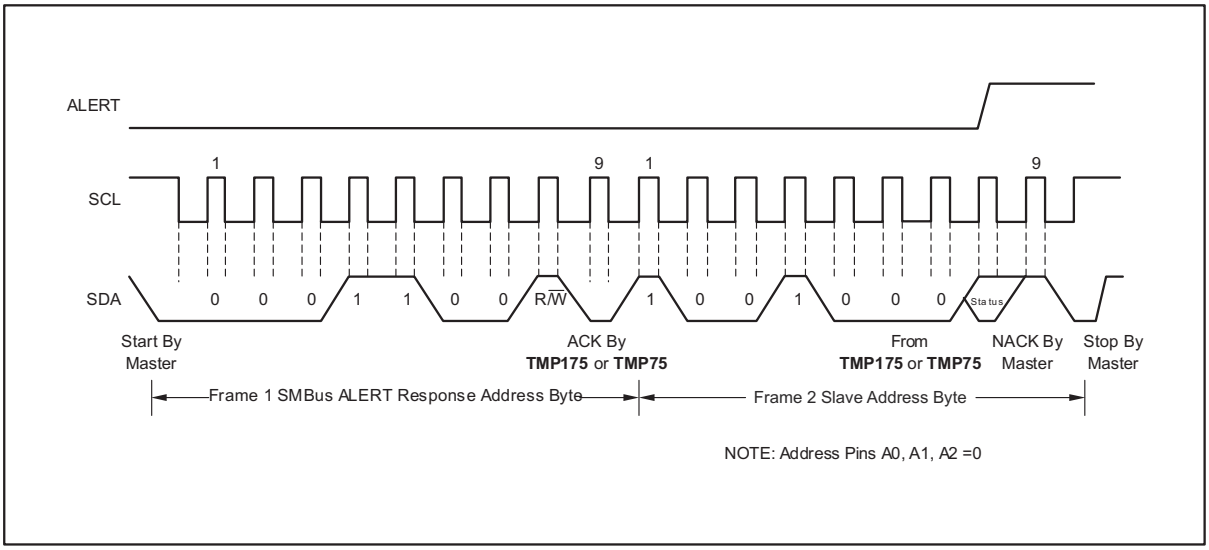

图 7-5. Timing Diagram for SMBus ALERT

7.4 Device Functional Modes

7.4.1 Shutdown Mode (SD)

The shutdown mode of the TMP175 and TMP75 devices lets the user save maximum power by shutting down all device circuitry other than the serial interface, which reduces current consumption to typically less than 0.1 μA. Shutdown mode is enabled when the SD bit is 1; the device shuts down when the current conversion is completed. When SD is equal to 0, the device maintains a continuous conversion state.

7.4.2 One-shot (OS)

The TMP175 and TMP75 feature a one-shot temperature measurement mode. When the device is in shutdown mode, writing 1 to the OS bit starts a single temperature conversion. The device returns to the shutdown state at the completion of the single conversion. This feature is useful to reduce power consumption in the TMP175 and TMP75 when continuous temperature monitoring is not required. When the configuration register is read, the OS always reads zero.

7.4.3 Thermostat Mode (TM)

The thermostat mode bit of the TMP175 and TMP75 indicates to the device whether to operate in comparator mode (TM = 0) or interrupt mode (TM = 1). For more information on comparator and interrupt modes, see the *High and Low Limit Registers* section.

7.4.4 Comparator Mode (TM = 0)

In comparator mode (TM = 0), the ALERT pin is activated when the temperature equals or exceeds the value in the $T_{(HIGH)}$ register and remains active until the temperature falls below the value in the $T_{(LOW)}$register. For more information on the comparator mode, see the *High and Low Limit Registers* section.

7.4.5 Interrupt Mode (TM = 1)

In interrupt mode (TM = 1), the ALERT pin is activated when the temperature exceeds $T_{(HIGH)}$ or goes below $T_{(LOW)}$ registers. The ALERT pin is cleared when the host controller reads the temperature register. For more information on the interrupt mode, see the *High and Low Limit Registers* section.

Copyright © 2021 Texas Instruments Incorporated

7.5 Programming

7.5.1 Pointer Register

图 7-6 shows the internal register structure of the TMP175 and TMP75. The 8-bit Pointer register of the devices is used to address a given data register. The Pointer register uses the two LSBs to identify which of the data registers must respond to a read or write command. 表 7-4 identifies the bits of the Pointer register byte. 表 7-5 describes the pointer address of the registers available in the TMP175 and TMP75. Power-up reset value of P1/P0 is 00.

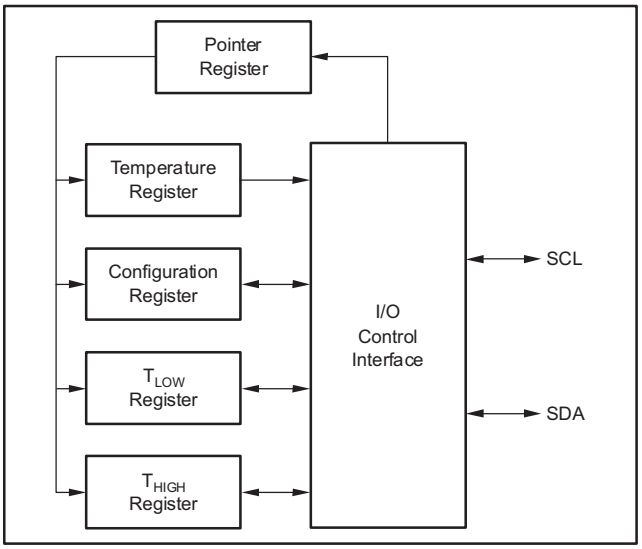

图 7-6. Internal Register Structure of the TMP175 and TMP75

7.5.1.1 Pointer Register Byte (pointer = N/A) [reset = 00h]

表 7-4. Pointer Register Byte

P7	P6	P5	P4	P3	P2	P1	P0
0	0	0	0	0	0	Register Bits	

7.5.1.2 Pointer Addresses of the TMP175

表 7-5. Pointer Addresses of the TMP175 and TMP75

P1	P0	TYPE	REGISTER
0	0	R only, default	Temperature register
0	1	R/W	Configuration register
1	0	R/W	T_{LOW} register
1	1	R/W	T_{HIGH} register

7.5.2 Temperature Register

The Temperature register of the TMP175 or TMP75 is a 12-bit, read-only register that stores the output of the most recent conversion. Two bytes must be read to obtain data, and are described in 表 7-6 and 表 7-7. Byte 1 is the most significant byte, followed by byte 2, the least significant byte. The first 12 bits are used to indicate temperature, with all remaining bits equal to zero. The least significant byte does not have to be read if that information is not needed. Following power-up or reset value, the Temperature register reads 0 °C until the first conversion is complete.

表 7-6. Byte 1 of the Temperature Register

D7	D6	D5	D4	D3	D2	D1	D0
T11	T10	T9	T8	T7	T6	T5	T4

表 7-7. Byte 2 of the Temperature Register

D7	D6	D5	D4	D3	D2	D1	D0
T3	T2	T1	T0	0	0	0	0

7.5.3 Configuration Register

The Configuration register is an 8-bit read/write register used to store bits that control the operational modes of the temperature sensor. Read and write operations are performed MSB first. The format of the Configuration register for the TMP175 and TMP75 is shown in 表 7-8, followed by a breakdown of the register bits. The power-up or reset value of the Configuration register are all bits equal to 0.

表 7-8. Configuration Register Format

D7	D6	D5	D4	D3	D2	D1	D0
OS	R1	R0	F1	F0	POL	TM	SD

7.5.3.1 Shutdown Mode (SD)

The shutdown mode of the TMP175 and TMP75 allows the user to save maximum power by shutting down all device circuitry other than the serial interface, which reduces current consumption to typically less than 0.1 μA. Shutdown mode is enabled when the SD bit is 1; the device shuts down when the current conversion is completed. When SD is equal to 0, the device maintains a continuous conversion state.

7.5.3.2 Thermostat Mode (TM)

The thermostat mode bit of the TMP175 and TMP75 indicates to the device whether to operate in comparator mode (TM = 0) or interrupt mode (TM = 1). For more information on comparator and interrupt modes, see the *High and Low Limit Registers* section.

Copyright © 2021 Texas Instruments Incorporated

7.5.3.3 Polarity (POL)

The polarity bit of the TMP175 lets the user adjust the polarity of the ALERT pin output. If the POL bit is set to 0 (default), the ALERT pin becomes active low. When POL bit is set to 1, the ALERT pin becomes active high and the state of the ALERT pin is inverted. The operation of the ALERT pin in various modes is illustrated in 图 7-7.

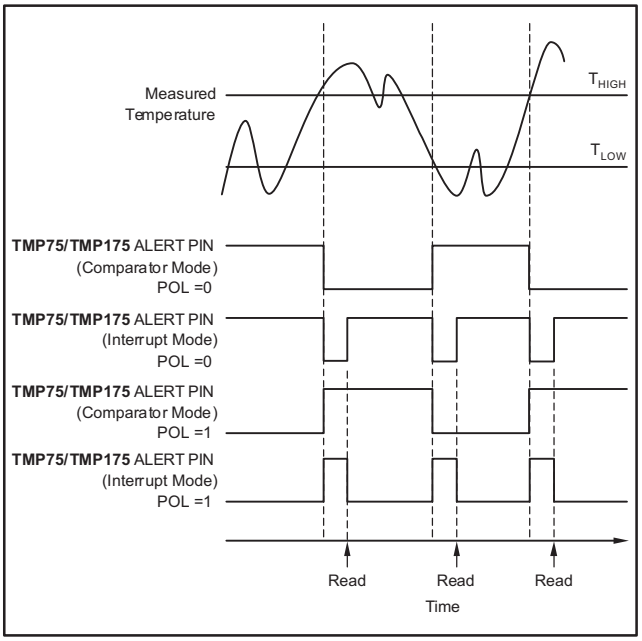

图 7-7. Output Transfer Function Diagrams

7.5.3.4 Fault Queue (F1/F0)

A fault condition is defined as when the measured temperature exceeds the user-defined limits set in the T_{HIGH} and T_{LOW} registers. Additionally, the number of fault conditions required to generate an alert may be programmed using the fault queue. The fault queue is provided to prevent a false alert as a result of environmental noise. The fault queue requires consecutive fault measurements in order to trigger the alert function. 表 7-9 defines the number of measured faults that can be programmed to trigger an alert condition in the device. For T_{HIGH} and T_{LOW} register format and byte order, see the *High and Low Limit Registers* section.

表 7-9. Fault Settings of the TMP175 and TMP75

F1	F0	CONSECUTIVE FAULTS
0	0	1
0	1	2
1	0	4 (TMP175); 3 (TMP75)
1	1	6 (TMP175); 4 (TMP75)

7.5.3.5 Converter Resolution (R1/R0)

The converter resolution bits control the resolution of the internal ADC converter. This control allows the user to maximize efficiency by programming for higher resolution or faster conversion time. 表 7-10 identifies the resolution bits and the relationship between resolution and conversion time.

表 7-10. Resolution of the TMP175 and TMP75

R1	R0	RESOLUTION	CONVERSION TIME (Typical)
0	0	9 bits (0.5 °C)	27.5 ms
0	1	10 bits (0.25 °C)	55 ms
1	0	11 bits (0.125 °C)	110 ms
1	1	12 bits (0.0625 °C)	220 ms

7.5.3.6 One-Shot (OS)

The TMP175 and TMP75 feature a one-shot temperature measurement mode. When the device is in shutdown mode, writing a 1 to the OS bit starts a single temperature conversion. The device returns to the shutdown state at the completion of the single conversion. This feature is useful to reduce power consumption in the TMP175 and TMP75 when continuous temperature monitoring is not required. When the configuration register is read, the OS always reads zero.

7.5.4 High and Low Limit Registers

In comparator mode (TM = 0), the ALERT pin of the TMP175 and TMP75 becomes active when the temperature equals or exceeds the value in T_{HIGH} and generates a consecutive number of faults according to fault bits F1 and F0. The ALERT pin remains active until the temperature falls below the indicated T_{LOW} value for the same number of faults.

In interrupt mode (TM = 1), the ALERT pin becomes active when the temperature equals or exceeds T_{HIGH} for a consecutive number of fault conditions. The ALERT pin remains active until a read operation of any register occurs, or the device successfully responds to the SMBus Alert response address. The ALERT pin is also cleared if the device is placed in shutdown mode. When the ALERT pin is cleared, it only become active again by the temperature falling below T_{LOW}. When the temperature falls below T_{LOW}, the ALERT pin becomes active and remains active until cleared by a read operation of any register or a successful response to the SMBus Alert response address. When the ALERT pin is cleared, the above cycle repeats, with the ALERT pin becoming active when the temperature equals or exceeds T_{HIGH}. The ALERT pin can also be cleared by resetting the device with the general call reset command. This action also clears the state of the internal registers in the device by returning the device to comparator mode (TM = 0). Changing thermostat mode on the TMP75 will clear existing alert in either mode.

Copyright © 2021 Texas Instruments Incorporated

Both operational modes are represented in 图 7-7. 表 7-11, 表 7-12, 表 7-13, and 表 7-14 describe the format for the T_{HIGH} and T_{LOW} registers. The most significant byte is sent first, followed by the least significant byte. Power-up reset values for T_{HIGH} and T_{LOW} are:

T_{HIGH} = 80 °C and T_{LOW} = 75 °C

The format of the data for T_{HIGH} and T_{LOW} is the same as for the Temperature register.

表 7-11. Byte 1 of the T_{HIGH} Register

D7	D6	D5	D4	D3	D2	D1	D0
H11	H10	H9	H8	H7	H6	H5	H4

表 7-12. Byte 2 of the T_{HIGH} Register

D7	D6	D5	D4	D3	D2	D1	D0
H3	H2	H1	H0	0	0	0	0

表 7-13. Byte 1 of the T_{LOW} Register

D7	D6	D5	D4	D3	D2	D1	D0
L11	L10	L9	L8	L7	L6	L5	L4

表 7-14. Byte 2 of the T_{LOW} Register

D7	D6	D5	D4	D3	D2	D1	D0
L3	L2	L1	L0	0	0	0	0

All 12 bits for the Temperature, T_{HIGH}, and T_{LOW} registers are used in the comparisons for the ALERT function for all converter resolutions. The three LSBs in T_{HIGH} and T_{LOW} can affect the ALERT output even if the converter is configured for 9-bit resolution.

8 Application and Implementation

Note

以下应用部分的信息不属于 TI 组件规范，TI 不担保其准确性和完整性。客户应负责确定 TI 组件是否适用于其应用。客户应验证并测试其设计，以确保系统功能。

8.1 Application Information

The TMP175 and TMP75 devices are used to measure the PCB temperature of the location it is mounted. The TMP175 and TMP75 feature SMBus, two-wire, and I^2C interface compatibility, with the TMP175 allowing up to 27 devices on one bus and the TMP75 allowing up to eight devices on one bus. The TMP175 and TMP75 both feature an SMBus Alert function. The TMP175 and TMP75 require no external components for operation except for pullup resistors on SCL, SDA, and ALERT, although a 0.01-μF bypass capacitor is recommended.

The sensing device of the TMP175 and TMP75 devices is the device itself. Thermal paths run through the package leads as well as the plastic package. The lower thermal resistance of metal causes the leads to provide the primary thermal path.

8.2 Typical Application

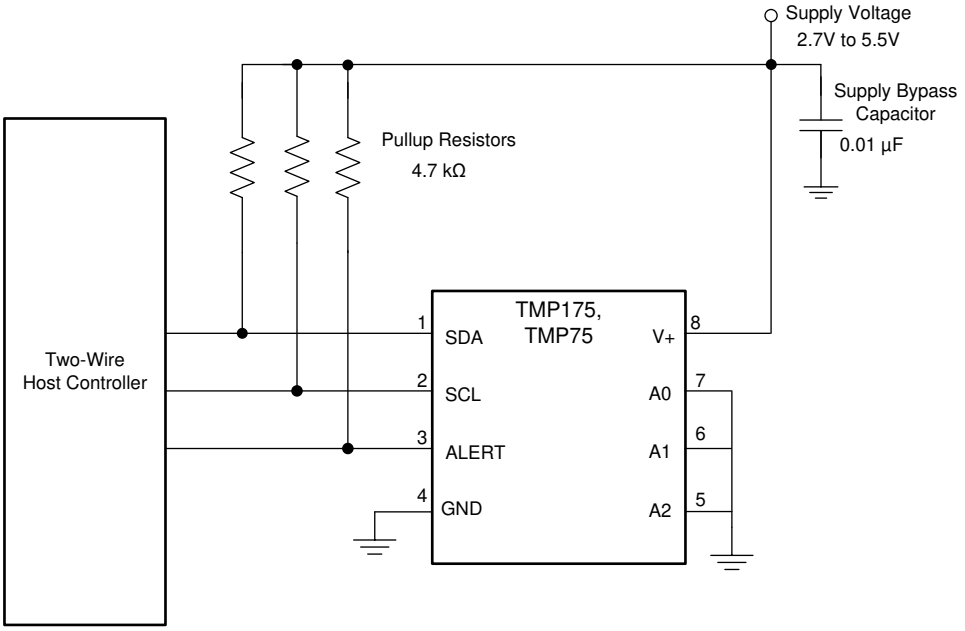

图 8-1. Typical Connections of the TMP175 and TMP75

8.2.1 Design Requirements

The TMP175 and TMP75 devices requires pullup resistors on the SCL, SDA, and ALERT pins. The recommended value for the pullup resistor is 4.7 kΩ. In some applications the pullup resistor can be lower or higher than 4.7 kΩ but must not exceed 3 mA of current on the SCL and SDA pins, and must not exceed 4 mA on the ALERT pin. A 0.01-μF bypass capacitor is recommended, as shown in 图 8-1. The SCL, SDA, and ALERT lines can be pulled up to a supply that is equal to or higher than V_S through the pullup resistors. For TMP175, to configure one of 27 different addresses on the bus, connect A0, A1, and A2 to either the GND or V+ pin, or float. Float indicates the pin is left unconnected. For the TMP75, to configure one of eight different addresses on the bus, connect A0, A1, and A2 to either the GND or V+ pin.

8.2.2 Detailed Design Procedure

Place the TMP175 and TMP75 devices in close proximity to the heat source that must be monitored, with a proper layout for good thermal coupling. This placement ensures that temperature changes are captured within

Copyright © 2021 Texas Instruments Incorporated

the shortest possible time interval. To maintain accuracy in applications that require air or surface temperature measurement, take care to isolate the package and leads from ambient air temperature. A thermally-conductive adhesive is helpful in achieving accurate surface temperature measurement.

8.2.3 Application Curve

图 8-2 shows the step response of the TMP175 and TMP75 devices to a submersion in an oil bath of 100 °C from room temperature (27 °C). The time-constant, or the time for the output to reach 63% of the input step, is 1.5 s. The time-constant result depends on the printed-circuit-board (PCB) that the TMPx175 devices are mounted. For this test, the TMP175 and TMP75 devices were soldered to a two-layer PCB that measured 0.375 inch × 0.437 inch.

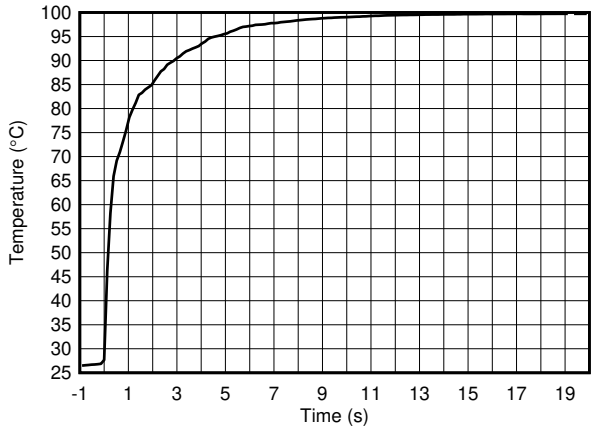

图 8-2. Temperature Step Response

9 Power Supply Recommendations

The TMP175 and TMP75 devices operate with a power supply in the range of 2.7 V to 5.5 V. A power-supply bypass capacitor is required for stability; place this capacitor as close as possible to the supply and ground pins of the device. A typical value for this supply bypass capacitor is 0.01 μF. Applications with noisy or high-impedance power supplies can require additional decoupling capacitors to reject power-supply noise.

10 Layout

10.1 Layout Guidelines

Place the power-supply bypass capacitor as close as possible to the supply and ground pins. The recommended value of this bypass capacitor is 0.01 μF. Additional decoupling capacitance can be added to compensate for noisy or high-impedance power supplies. Pull up the open-drain output pins SDA , SCL, and ALERT through 4.7-kΩ pullup resistors.

10.2 Layout Example

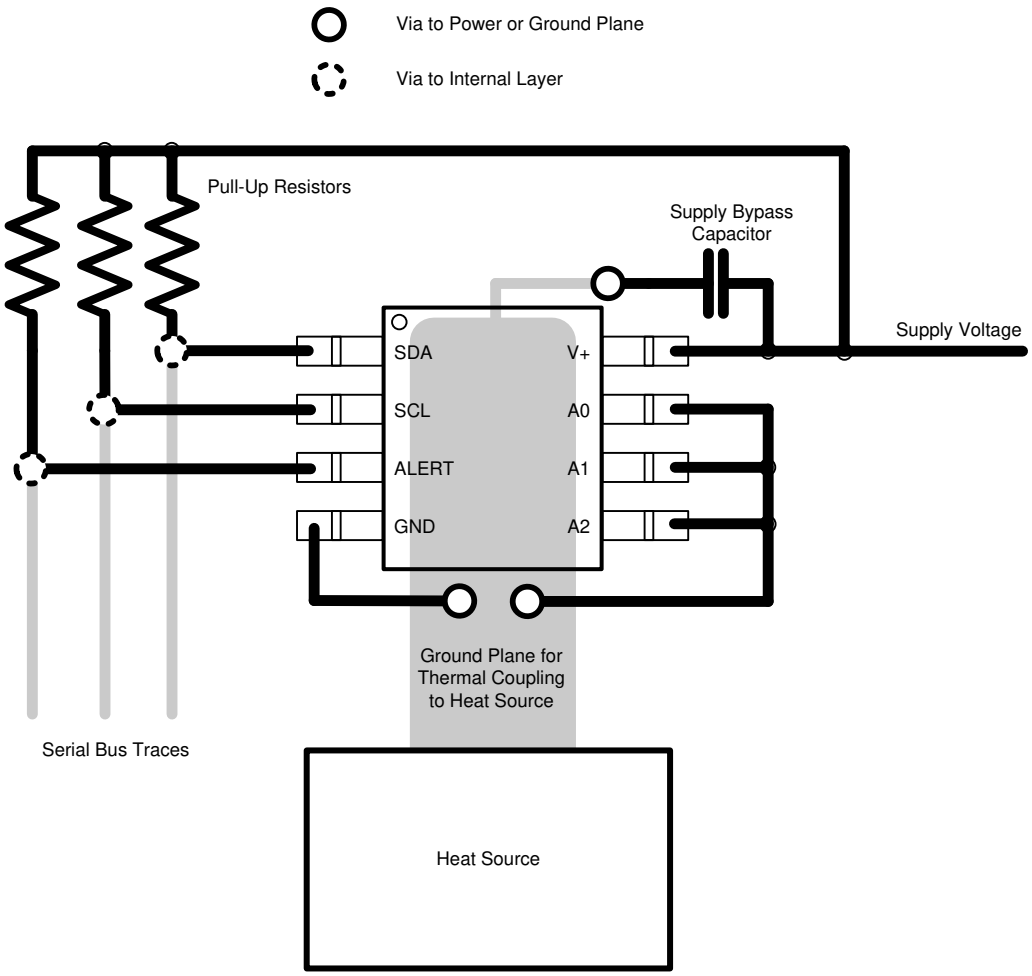

图 10-1. Layout Example

Copyright © 2021 Texas Instruments Incorporated

11 Device and Documentation Support

11.1 接收文档更新通知

要接收文档更新通知，请导航至 ti.com 上的器件产品文件夹。点击*订阅更新* 进行注册，即可每周接收产品信息更改摘要。有关更改的详细信息，请查看任何已修订文档中包含的修订历史记录。

11.2 支持资源

TI E2E™ 中文支持论坛是工程师的重要参考资料，可直接从专家处获得快速、经过验证的解答和设计帮助。搜索现有解答或提出自己的问题，获得所需的快速设计帮助。

链接的内容由各个贡献者“按原样”提供。这些内容并不构成 TI 技术规范，并且不一定反映 TI 的观点；请参阅 TI 的使用条款。

11.3 Trademarks

SMBus™ is a trademark of Intel Corporation.
TI E2E™ is a trademark of Texas Instruments.
所有商标均为其各自所有者的财产。

11.4 静电放电警告

静电放电 (ESD) 会损坏这个集成电路。德州仪器 (TI) 建议通过适当的预防措施处理所有集成电路。如果不遵守正确的处理和安装程序，可能会损坏集成电路。

ESD 的损坏小至导致微小的性能降级，大至整个器件故障。精密的集成电路可能更容易受到损坏，这是因为非常细微的参数更改都可能会导致器件与其发布的规格不相符。

11.5 术语表

TI 术语表	本术语表列出并解释了术语、首字母缩略词和定义。

12 Mechanical, Packaging, and Orderable Information

The following pages include mechanical, packaging, and orderable information. This information is the most current data available for the designated devices. This data is subject to change without notice and revision of this document. For browser-based versions of this data sheet, refer to the left-hand navigation.

PACKAGING INFORMATION

Orderable Device	Status (1)	Package Type	Package Drawing	Pins	Package Qty	Eco Plan (2)	Lead finish/ Ball material (6)	MSL Peak Temp (3)	Op Temp (°C)	Device Marking (4/5)	Samples
TMP175AID	ACTIVE	SOIC	D	8	75	RoHS & Green	NIPDAU	Level-2-250C-1 YEAR	-40 to 125	TMP175	Samples
TMP175AIDGKR	ACTIVE	VSSOP	DGK	8	2500	RoHS & Green	NIPDAU | NIPDAUAG	Level-2-260C-1 YEAR	-40 to 125	DABQ	Samples
TMP175AIDGKT	ACTIVE	VSSOP	DGK	8	250	RoHS & Green	NIPDAU | NIPDAUAG	Level-2-260C-1 YEAR	-40 to 125	DABQ	Samples
TMP175AIDGKTG4	ACTIVE	VSSOP	DGK	8	250	RoHS & Green	NIPDAU	Level-2-260C-1 YEAR	-40 to 125	DABQ	Samples
TMP175AIDR	ACTIVE	SOIC	D	8	2500	RoHS & Green	NIPDAU	Level-2-260C-1 YEAR	-40 to 125	TMP175	Samples
TMP75AID	ACTIVE	SOIC	D	8	75	RoHS & Green	NIPDAU	Level-1-260C-UNLIM	-40 to 125	TMP75	Samples
TMP75AIDG4	ACTIVE	SOIC	D	8	75	RoHS & Green	NIPDAU	Level-1-260C-UNLIM	-40 to 125	TMP75	Samples
TMP75AIDGKR	ACTIVE	VSSOP	DGK	8	2500	RoHS & Green	NIPDAU | SN | NIPDAUAG	Level-2-260C-1 YEAR	-40 to 125	T127	Samples
TMP75AIDGKRG4	ACTIVE	VSSOP	DGK	8	2500	RoHS & Green	SN	Level-2-260C-1 YEAR	-40 to 125	T127	Samples
TMP75AIDGKT	ACTIVE	VSSOP	DGK	8	250	RoHS & Green	NIPDAU | SN | NIPDAUAG	Level-2-260C-1 YEAR	-40 to 125	T127	Samples
TMP75AIDGKTG4	ACTIVE	VSSOP	DGK	8	250	RoHS & Green	SN	Level-2-260C-1 YEAR	-40 to 125	T127	Samples
TMP75AIDR	ACTIVE	SOIC	D	8	2500	RoHS & Green	NIPDAU	Level-1-260C-UNLIM	-40 to 125	TMP75	Samples
TMP75AIDRG4	ACTIVE	SOIC	D	8	2500	RoHS & Green	NIPDAU	Level-1-260C-UNLIM	-40 to 125	TMP75	Samples

(1) The marketing status values are defined as follows:
ACTIVE: Product device recommended for new designs.
LIFEBUY: TI has announced that the device will be discontinued, and a lifetime-buy period is in effect.
NRND: Not recommended for new designs. Device is in production to support existing customers, but TI does not recommend using this part in a new design.
PREVIEW: Device has been announced but is not in production. Samples may or may not be available.
OBSOLETE: TI has discontinued the production of the device.

(2) **RoHS:** TI defines "RoHS" to mean semiconductor products that are compliant with the current EU RoHS requirements for all 10 RoHS substances, including the requirement that RoHS substance do not exceed 0.1% by weight in homogeneous materials. Where designed to be soldered at high temperatures, "RoHS" products are suitable for use in specified lead-free processes. TI may reference these types of products as "Pb-Free".
RoHS Exempt: TI defines "RoHS Exempt" to mean products that contain lead but are compliant with EU RoHS pursuant to a specific EU RoHS exemption.

Green: TI defines "Green" to mean the content of Chlorine (Cl) and Bromine (Br) based flame retardants meet JS709B low halogen requirements of <=1000ppm threshold. Antimony trioxide based flame retardants must also meet the <=1000ppm threshold requirement.

(3) MSL, Peak Temp. - The Moisture Sensitivity Level rating according to the JEDEC industry standard classifications, and peak solder temperature.

(4) There may be additional marking, which relates to the logo, the lot trace code information, or the environmental category on the device.

(5) Multiple Device Markings will be inside parentheses. Only one Device Marking contained in parentheses and separated by a "~" will appear on a device. If a line is indented then it is a continuation of the previous line and the two combined represent the entire Device Marking for that device.

(6) Lead finish/Ball material - Orderable Devices may have multiple material finish options. Finish options are separated by a vertical ruled line. Lead finish/Ball material values may wrap to two lines if the finish value exceeds the maximum column width.

Important Information and Disclaimer: The information provided on this page represents TI's knowledge and belief as of the date that it is provided. TI bases its knowledge and belief on information provided by third parties, and makes no representation or warranty as to the accuracy of such information. Efforts are underway to better integrate information from third parties. TI has taken and continues to take reasonable steps to provide representative and accurate information but may not have conducted destructive testing or chemical analysis on incoming materials and chemicals. TI and TI suppliers consider certain information to be proprietary, and thus CAS numbers and other limited information may not be available for release.

In no event shall TI's liability arising out of such information exceed the total purchase price of the TI part(s) at issue in this document sold by TI to Customer on an annual basis.

OTHER QUALIFIED VERSIONS OF TMP175, TMP75 :

- Automotive : TMP175-Q1, TMP75-Q1

NOTE: Qualified Version Definitions:

- Automotive - Q100 devices qualified for high-reliability automotive applications targeting zero defects

TAPE AND REEL INFORMATION

REEL DIMENSIONS

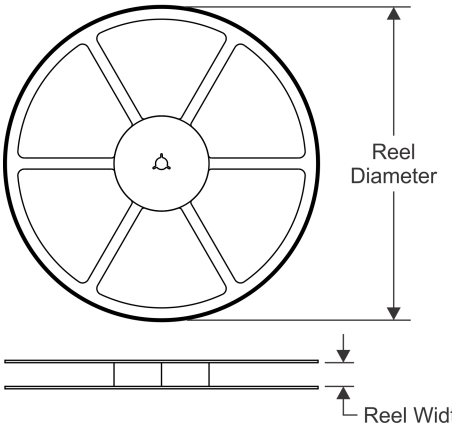

TAPE DIMENSIONS

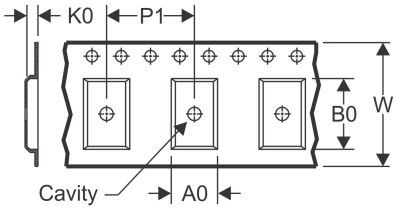

A0	Dimension designed to accommodate the component width
B0	Dimension designed to accommodate the component length
K0	Dimension designed to accommodate the component thickness
W	Overall width of the carrier tape
P1	Pitch between successive cavity centers

QUADRANT ASSIGNMENTS FOR PIN 1 ORIENTATION IN TAPE

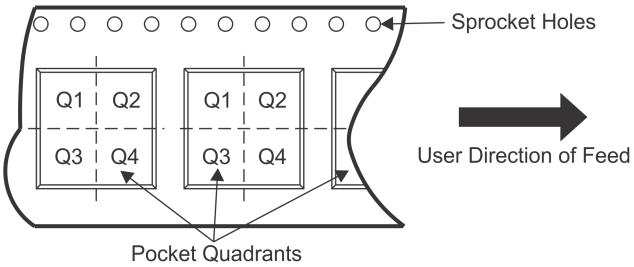

*All dimensions are nominal

Device	Package Type	Package Drawing	Pins	SPQ	Reel Diameter (mm)	Reel Width W1 (mm)	A0 (mm)	B0 (mm)	K0 (mm)	P1 (mm)	W (mm)	Pin1 Quadrant
TMP175AIDGKR	VSSOP	DGK	8	2500	330.0	12.4	5.3	3.3	1.3	8.0	12.0	Q1
TMP175AIDGKR	VSSOP	DGK	8	2500	330.0	12.4	5.3	3.4	1.4	8.0	12.0	Q1
TMP175AIDGKT	VSSOP	DGK	8	250	180.0	12.4	5.3	3.3	1.3	8.0	12.0	Q1
TMP175AIDGKT	VSSOP	DGK	8	250	330.0	12.4	5.3	3.4	1.4	8.0	12.0	Q1
TMP175AIDR	SOIC	D	8	2500	330.0	12.4	6.4	5.2	2.1	8.0	12.0	Q1
TMP75AIDGKR	VSSOP	DGK	8	2500	330.0	12.4	5.3	3.4	1.4	8.0	12.0	Q1
TMP75AIDGKR	VSSOP	DGK	8	2500	330.0	12.4	5.3	3.4	1.4	8.0	12.0	Q1
TMP75AIDGKT	VSSOP	DGK	8	250	330.0	12.4	5.3	3.4	1.4	8.0	12.0	Q1
TMP75AIDGKT	VSSOP	DGK	8	250	330.0	12.4	5.3	3.4	1.4	8.0	12.0	Q1
TMP75AIDR	SOIC	D	8	2500	330.0	12.4	6.4	5.2	2.1	8.0	12.0	Q1

TAPE AND REEL BOX DIMENSIONS

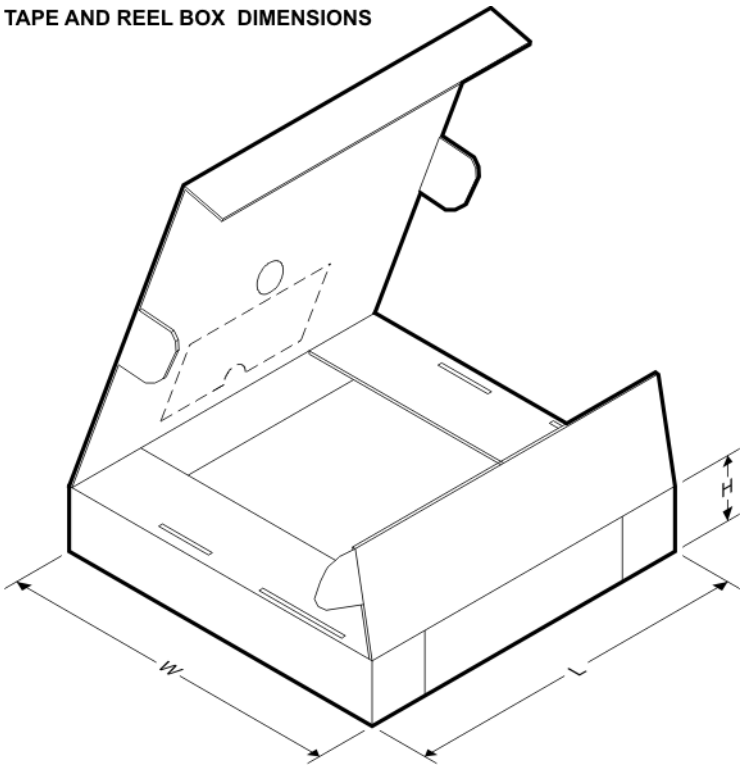

*All dimensions are nominal

Device	Package Type	Package Drawing	Pins	SPQ	Length (mm)	Width (mm)	Height (mm)
TMP175AIDGKR	VSSOP	DGK	8	2500	367.0	367.0	38.0
TMP175AIDGKR	VSSOP	DGK	8	2500	366.0	364.0	50.0
TMP175AIDGKT	VSSOP	DGK	8	250	213.0	191.0	35.0
TMP175AIDGKT	VSSOP	DGK	8	250	366.0	364.0	50.0
TMP175AIDR	SOIC	D	8	2500	853.0	449.0	35.0
TMP75AIDGKR	VSSOP	DGK	8	2500	366.0	364.0	50.0
TMP75AIDGKR	VSSOP	DGK	8	2500	366.0	364.0	50.0
TMP75AIDGKT	VSSOP	DGK	8	250	366.0	364.0	50.0
TMP75AIDGKT	VSSOP	DGK	8	250	366.0	364.0	50.0
TMP75AIDR	SOIC	D	8	2500	853.0	449.0	35.0

TUBE

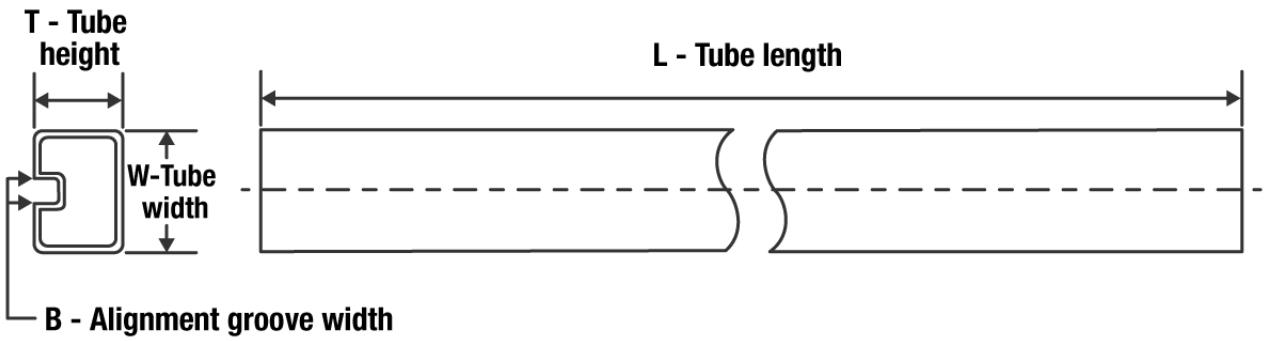

*All dimensions are nominal

Device	Package Name	Package Type	Pins	SPQ	L (mm)	W (mm)	T (µm)	B (mm)
TMP175AID	D	SOIC	8	75	506.6	8	3940	4.32
TMP75AID	D	SOIC	8	75	506.6	8	3940	4.32
TMP75AIDG4	D	SOIC	8	75	506.6	8	3940	4.32

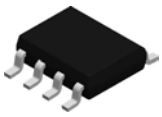

PACKAGE OUTLINE

D0008A

SOIC - 1.75 mm max height

SMALL OUTLINE INTEGRATED CIRCUIT

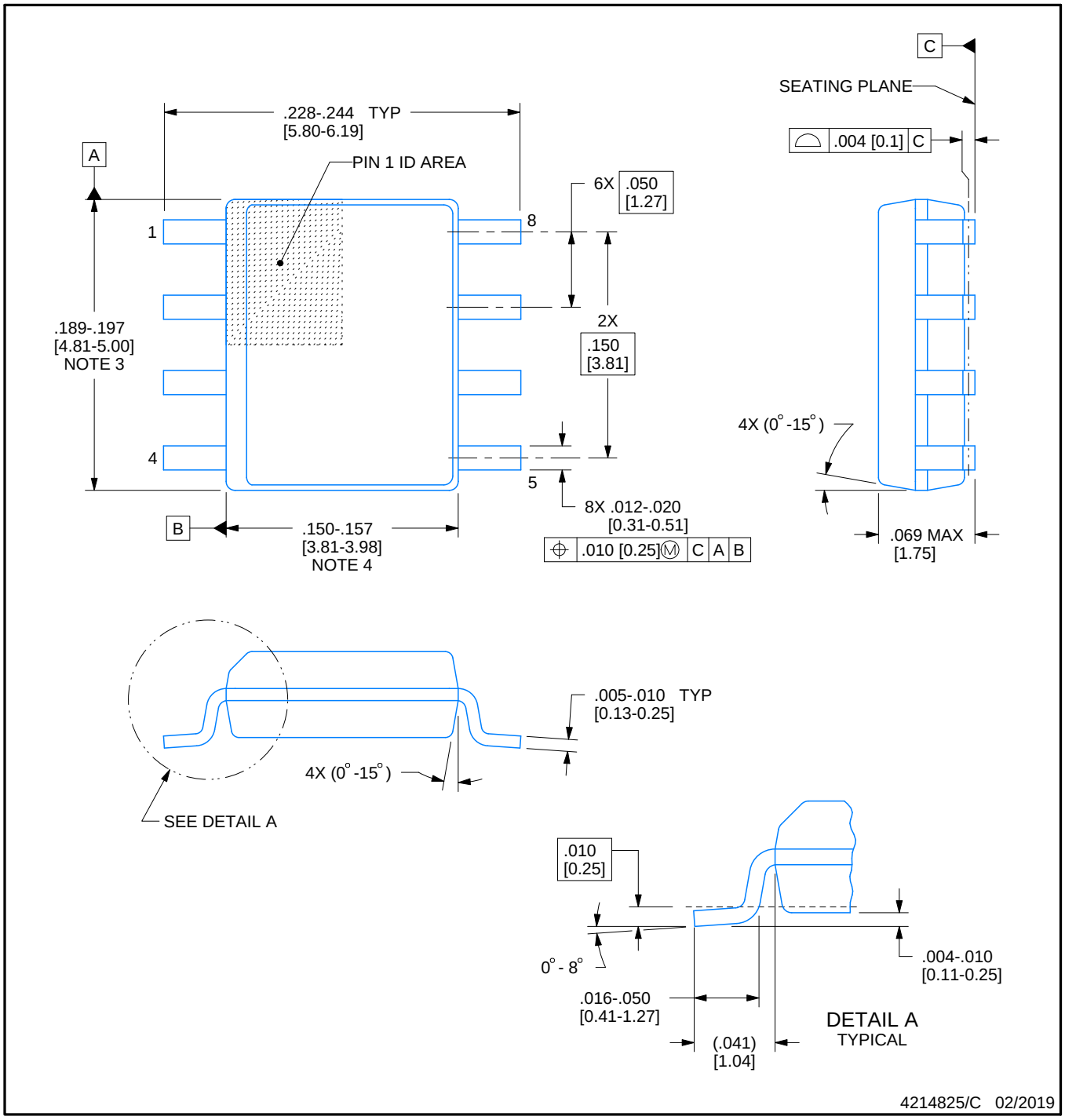

NOTES:

1. Linear dimensions are in inches [millimeters]. Dimensions in parenthesis are for reference only. Controlling dimensions are in inches. Dimensioning and tolerancing per ASME Y14.5M.
2. This drawing is subject to change without notice.
3. This dimension does not include mold flash, protrusions, or gate burrs. Mold flash, protrusions, or gate burrs shall not exceed .006 [0.15] per side.
4. This dimension does not include interlead flash.
5. Reference JEDEC registration MS-012, variation AA.

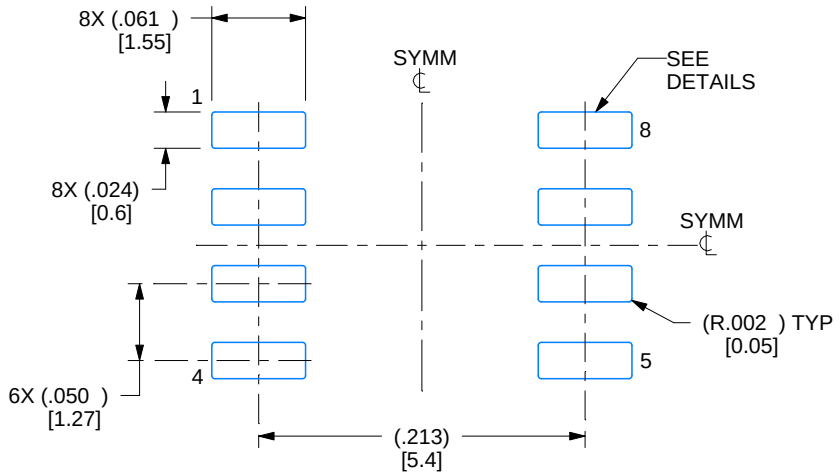

LAND PATTERN EXAMPLE
EXPOSED METAL SHOWN
SCALE:8X

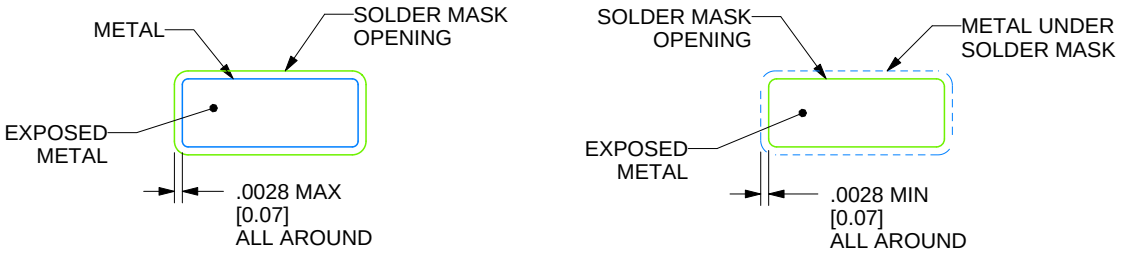

SOLDER MASK DETAILS

4214825/C 02/2019

NOTES: (continued)

6. Publication IPC-7351 may have alternate designs.
7. Solder mask tolerances between and around signal pads can vary based on board fabrication site.

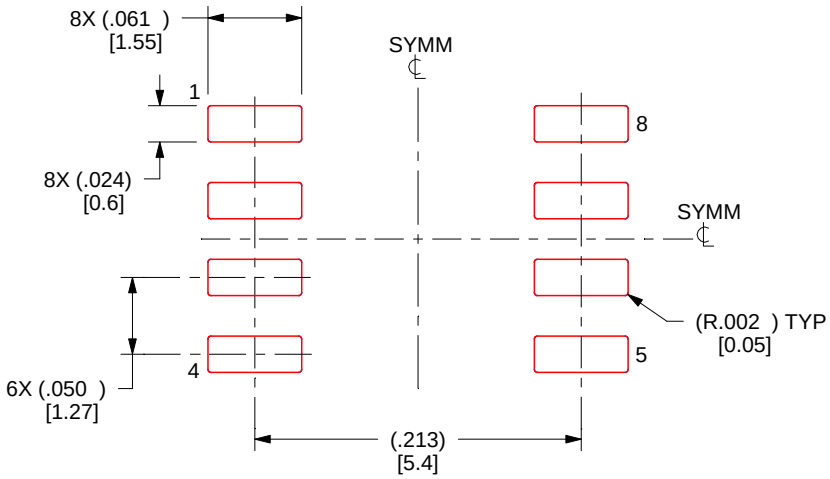

SOLDER PASTE EXAMPLE
BASED ON .005 INCH [0.125 MM] THICK STENCIL
SCALE:8X

4214825/C 02/2019

NOTES: (continued)

8. Laser cutting apertures with trapezoidal walls and rounded corners may offer better paste release. IPC-7525 may have alternate design recommendations.
9. Board assembly site may have different recommendations for stencil design.

DGK (S–PDSO–G8) PLASTIC SMALL–OUTLINE PACKAGE

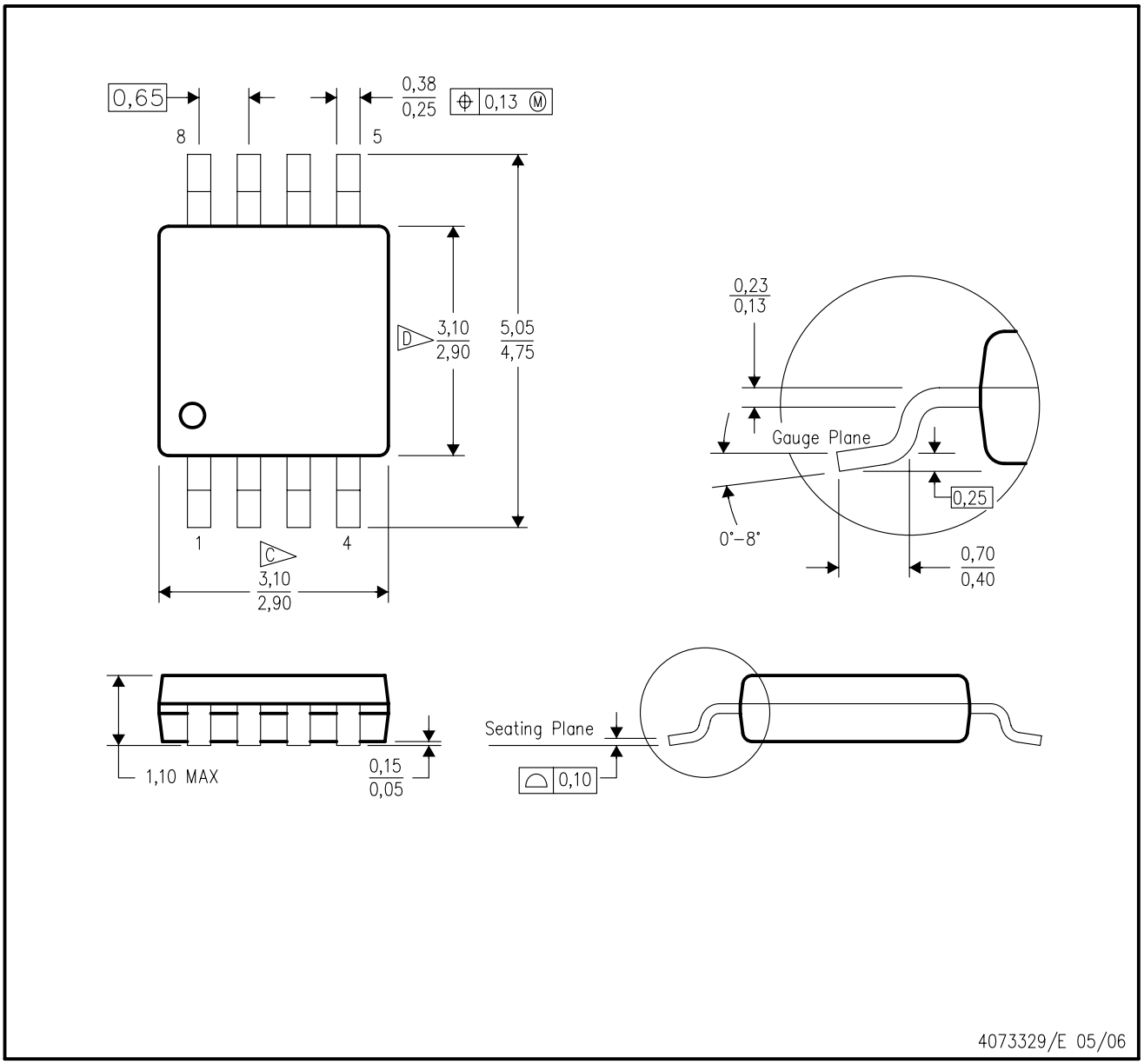

NOTES:
A. All linear dimensions are in millimeters.
B. This drawing is subject to change without notice.
C. Body length does not include mold flash, protrusions, or gate burrs. Mold flash, protrusions, or gate burrs shall not exceed 0.15 per end.
D. Body width does not include interlead flash. Interlead flash shall not exceed 0.50 per side.
E. Falls within JEDEC MO–187 variation AA, except interlead flash.

DGK (S–PDSO–G8) PLASTIC SMALL OUTLINE PACKAGE

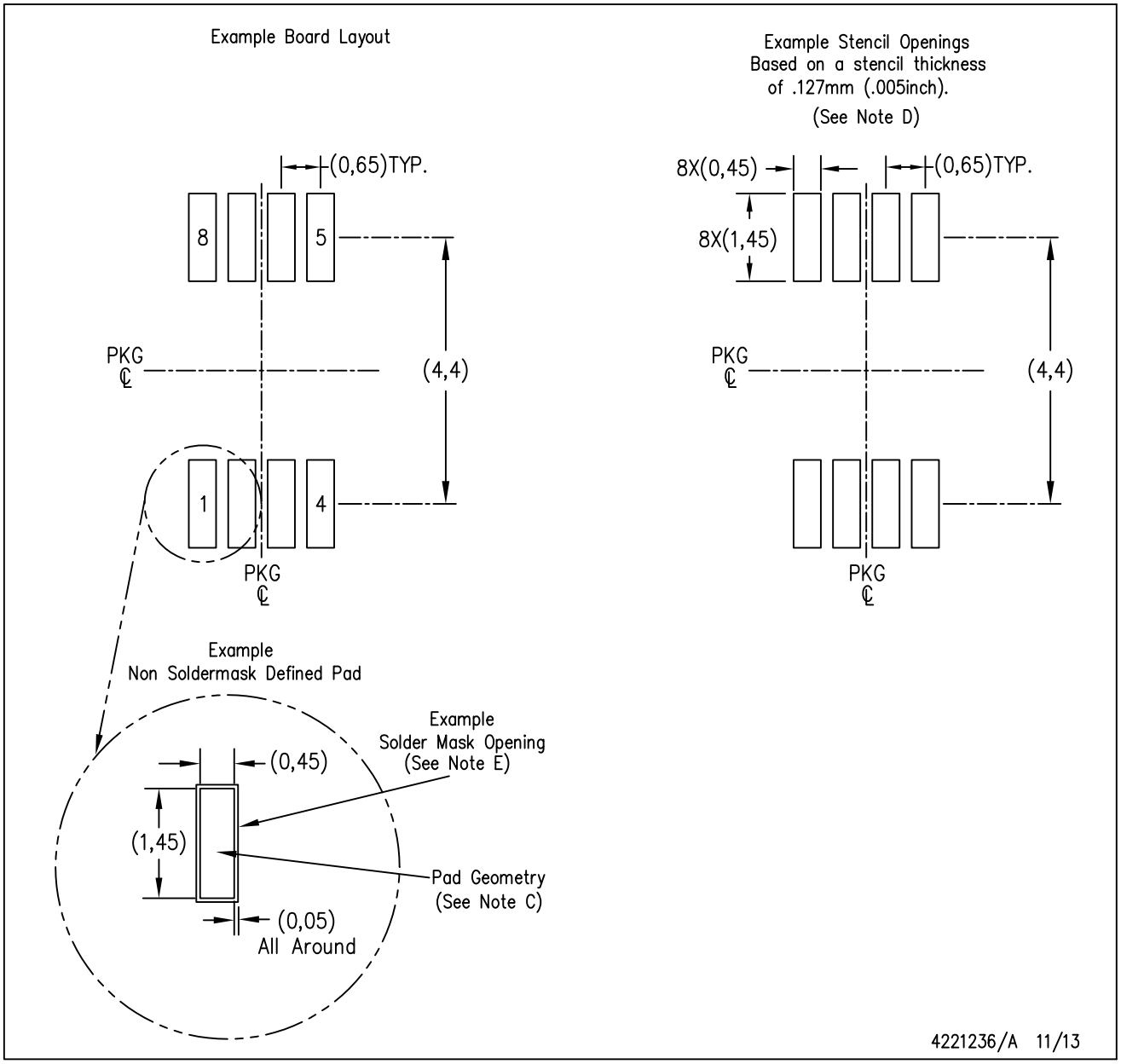

NOTES:
A. All linear dimensions are in millimeters.
B. This drawing is subject to change without notice.
C. Publication IPC–7351 is recommended for alternate designs.
D. Laser cutting apertures with trapezoidal walls and also rounding corners will offer better paste release. Customers should contact their board assembly site for stencil design recommendations. Refer to IPC–7525 for other stencil recommendations.
E. Customers should contact their board fabrication site for solder mask tolerances between and around signal pads.

重要声明和免责声明

TI“按原样”提供技术和可靠性数据（包括数据表）、设计资源（包括参考设计）、应用或其他设计建议、网络工具、安全信息和其他资源，不保证没有瑕疵且不做出任何明示或暗示的担保，包括但不限于对适销性、某特定用途方面的适用性或不侵犯任何第三方知识产权的暗示担保。

这些资源可供使用 TI 产品进行设计的熟练开发人员使用。您将自行承担以下全部责任：(1) 针对您的应用选择合适的 TI 产品，(2) 设计、验证并测试您的应用，(3) 确保您的应用满足相应标准以及任何其他功能安全、信息安全、监管或其他要求。

这些资源如有变更，恕不另行通知。TI 授权您仅可将这些资源用于研发本资源所述的 TI 产品的应用。严禁对这些资源进行其他复制或展示。您无权使用任何其他 TI 知识产权或任何第三方知识产权。您应全额赔偿因在这些资源的使用中对 TI 及其代表造成的任何索赔、损害、成本、损失和债务，TI 对此概不负责。

TI 提供的产品受 TI 的销售条款或 ti.com 上其他适用条款/TI 产品随附的其他适用条款的约束。TI 提供这些资源并不会扩展或以其他方式更改 TI 针对 TI 产品发布的适用的担保或担保免责声明。

TI 反对并拒绝您可能提出的任何其他或不同的条款。

邮寄地址：Texas Instruments, Post Office Box 655303, Dallas, Texas 75265
Copyright © 2022，德州仪器 (TI) 公司