±1°C Remote and Local TEMPERATURE SENSOR

Check for Samples: TMP421, TMP422, TMP423

FEATURES

- **SOT23-8 and DSBGA (WCSP) PACKAGES**
- **±1°C REMOTE DIODE SENSOR (MAX)**
- **±1.5°C LOCAL TEMPERATURE SENSOR (MAX)**
- **SERIES RESISTANCE CANCELLATION**
- **n-FACTOR CORRECTION**
- **TWO-WIRE/ SMBus™ SERIAL INTERFACE**
- **MULTIPLE INTERFACE ADDRESSES**
- **DIODE FAULT DETECTION**
- **RoHS COMPLIANT AND NO Sb/Br**

APPLICATIONS

- **PROCESSOR/FPGA TEMPERATURE MONITORING**
- **LCD/ DLP®/LCOS PROJECTORS**
- **SERVERS**
- **CENTRAL OFFICE TELECOM EQUIPMENT**
- **STORAGE AREA NETWORKS (SAN)**

DESCRIPTION

The TMP421, TMP422, and TMP423 are remote temperature sensor monitors with a built-in local temperature sensor. The remote temperature sensor diode-connected transistors are typically low-cost, NPN- or PNP-type transistors or diodes that are an integral part of microcontrollers, microprocessors, or FPGAs.

Remote accuracy is ±1°C for multiple IC manufacturers, with no calibration needed. The two-wire serial interface accepts SMBus write byte, read byte, send byte, and receive byte commands to configure the device.

The TMP421, TMP422, and TMP423 include series resistance cancellation, programmable non-ideality factor, wide remote temperature measurement range (up to +150°C), and diode fault detection.

The TMP421, TMP422, and TMP423 are all available in a SOT23-8 package. The TMP421C is also available in a DSBGA (WCSP) package.

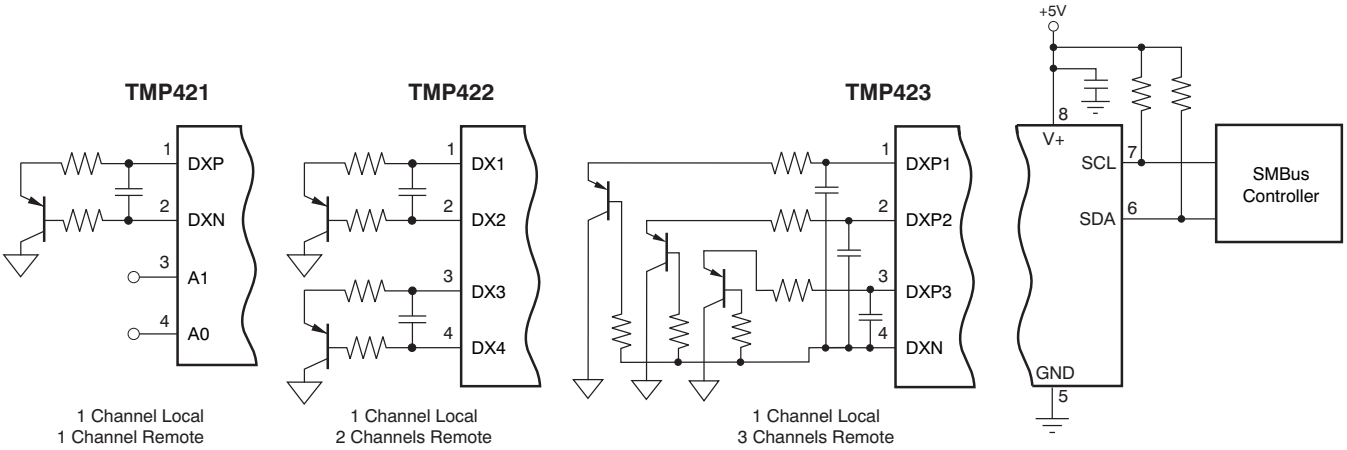

Please be aware that an important notice concerning availability, standard warranty, and use in critical applications of Texas Instruments semiconductor products and disclaimers thereto appears at the end of this data sheet.

DLP is a registered trademark of Texas Instruments.
SMBus is a trademark of Intel Corporation.
All other trademarks are the property of their respective owners.

PRODUCTION DATA information is current as of publication date. Products conform to specifications per the terms of the Texas Instruments standard warranty. Production processing does not necessarily include testing of all parameters.

Copyright © 2007–2012, Texas Instruments Incorporated

This integrated circuit can be damaged by ESD. Texas Instruments recommends that all integrated circuits be handled with appropriate precautions. Failure to observe proper handling and installation procedures can cause damage.

ESD damage can range from subtle performance degradation to complete device failure. Precision integrated circuits may be more susceptible to damage because very small parametric changes could cause the device not to meet its published specifications.

PACKAGE INFORMATION(1)

PRODUCT	DESCRIPTION	TWO-WIRE ADDRESS	PACKAGE-LEAD	PACKAGE DESIGNATOR	PACKAGE MARKING
TMP421	Single Channel Remote Junction Temperature Sensor	100 11xx	SOT23-8	DCN	DACI
TMP421C		100 11xx	DSBGA-8	YZD	TMP421
TMP422	Dual Channel Remote Junction Temperature Sensor	100 11xx	SOT23-8	DCN	DADI
TMP423A	Triple Channel Remote Junction Temperature Sensor	100 1100	SOT23-8	DCN	DAEI
TMP423B		100 1101	SOT23-8	DCN	DAFI

(1) For the most current package and ordering information see the Package Option Addendum at the end of this document, or see the TI web site at www.ti.com.

ABSOLUTE MAXIMUM RATINGS(1)

Over operating free-air temperature range, unless otherwise noted.

		TMP421, TMP422, TMP423	UNIT
Power Supply, V_S		+7	V
Input Voltage	Pins 1, 2, 3, and 4 only	–0.5 to V_S + 0.5	V
	Pins 6 and 7 only	–0.5 to 7	V
Input Current		10	mA
Operating Temperature Range		–55 to +127	°C
Storage Temperature Range		–60 to +130	°C
Junction Temperature (T_J max)		+150	°C
ESD Rating	Human Body Model (HBM)	3000	V
	Charged Device Model (CDM)	1000	V
	Machine Model (MM)	200	V

(1) Stresses above these ratings may cause permanent damage. Exposure to absolute maximum conditions for extended periods may degrade device reliability. These are stress ratings only, and functional operation of the device at these or any other conditions beyond those specified is not implied.

Copyright © 2007–2012, Texas Instruments Incorporated

ELECTRICAL CHARACTERISTICS: TMP421, TMP422, TMP423

At T_A = –40°C to +125°C and V+ = 2.7V to 5.5V, unless otherwise noted.

PARAMETER		CONDITIONS	TMP421, TMP422, TMP423 MIN	TYP	MAX	UNIT
TEMPERATURE ERROR						
Local Temperature Sensor	TE_{LOCAL}	T_A = –40°C to +125°C		±1.25	±2.5	°C
		T_A = +15°C to +85°C, V+ = 3.3V		±0.25	±1.5	°C
Remote Temperature Sensor(1)	TE_{REMOTE}	T_A = +15°C to +85°C, T_D = –40°C to +150°C, V+ = 3.3V		±0.25	±1	°C
		T_A = –40°C to +100°C, T_D = –40°C to +150°C, V+ = 3.3V		±1	±3	°C
		T_A = –40°C to +125°C, T_D = –40°C to +150°C		±3	±5	°C
vs Supply (Local/Remote)		V+ = 2.7V to 5.5V		±0.2	±0.5	°C/V
TEMPERATURE MEASUREMENT						
Conversion Time (per channel)			100	115	130	ms
Resolution						
Local Temperature Sensor (programmable)				12		Bits
Remote Temperature Sensor				12		Bits
Remote Sensor Source Currents						
High		Series Resistance 3kΩ Max		120		µA
Medium High				60		µA
Medium Low				12		µA
Low				6		µA
Remote Transistor Ideality Factor	η	TMP421/22/23 Optimized Ideality Factor		1.008		
SMBus INTERFACE						
Logic Input High Voltage (SCL, SDA)	V_{IH}		2.1			V
Logic Input Low Voltage (SCL, SDA)	V_{IL}				0.8	V
Hysteresis				500		mV
SMBus Output Low Sink Current			6			mA
SDA Output Low Voltage	V_{OL}	I_{OUT} = 6mA		0.15	0.4	V
Logic Input Current		0 ≤ V_{IN} ≤ 6V	–1		+1	µA
SMBus Input Capacitance (SCL, SDA)				3		pF
SMBus Clock Frequency					3.4	MHz
SMBus Timeout			25	30	35	ms
SCL Falling Edge to SDA Valid Time					1	µs
DIGITAL INPUTS						
Input Capacitance				3		pF
Input Logic Levels						
Input High Voltage	V_{IH}		0.7(V+)		(V+)+0.5	V
Input Low Voltage	V_{IL}		–0.5		0.3(V+)	V
Leakage Input Current	I_{IN}	0V ≤ V_{IN} ≤ V+			1	µA
POWER SUPPLY						
Specified Voltage Range	V+		2.7		5.5	V
Quiescent Current	I_Q	0.0625 Conversions per Second		32	38	µA
		Eight Conversions per Second		400	525	µA
		Serial Bus Inactive, Shutdown Mode		3	10	µA
		Serial Bus Active, f_S = 400kHz, Shutdown Mode		90		µA
		Serial Bus Active, f_S = 3.4MHz, Shutdown Mode		350		µA
Undervoltage Lockout	UVLO		2.3	2.4	2.6	V
Power-On Reset Threshold	POR			1.6	2.3	V
TEMPERATURE RANGE						
Specified Range			–40		+125	°C
Storage Range			–60		+130	°C
Thermal Resistance	θ_{JA}	SOT23		100		°C/W

(1) Tested with less than 5Ω effective series resistance and 100pF differential input capacitance.

Copyright © 2007–2012, Texas Instruments Incorporated

ELECTRICAL CHARACTERISTICS: TMP421C

At T_A = –40°C to +125°C and V+ = 2.55V to 5.5V, unless otherwise noted.

PARAMETER		CONDITIONS	TMP421C MIN	TMP421C TYP	TMP421C MAX	UNIT
TEMPERATURE ERROR						
Local Temperature Sensor	TE_{LOCAL}	T_A = –40°C to +125°C		±1.25	±2.5	°C
		T_A = +15°C to +85°C, V+ = 3.3V		±0.25	±1.5	°C
Remote Temperature Sensor(1)	TE_{REMOTE}	T_A = +15°C to +85°C, T_D = –40°C to +150°C, V+ = 3.3V		±0.25	±1	°C
		T_A = –40°C to +100°C, T_D = –40°C to +150°C, V+ = 3.3V		±1	±3	°C
		T_A = –40°C to +125°C, T_D = –40°C to +150°C		±3	±5	°C
vs Supply (Local/Remote)		V+ = 2.55V to 5.5V		±0.2	±0.5	°C/V
TEMPERATURE MEASUREMENT						
Conversion Time (per channel)			100	115	130	ms
Resolution						
Local Temperature Sensor (programmable)				12		Bits
Remote Temperature Sensor				12		Bits
Remote Sensor Source Currents						
High		Series Resistance 3kΩ Max		120		µA
Medium High				60		µA
Medium Low				12		µA
Low				6		µA
Remote Transistor Ideality Factor	η	TMP421C Optimized Ideality Factor		1.008		
SMBus INTERFACE						
Logic Input High Voltage (SCL, SDA)	V_{IH}		2.1			V
Logic Input Low Voltage (SCL, SDA)	V_{IL}				0.8	V
Hysteresis				500		mV
SMBus Output Low Sink Current			6			mA
SDA Output Low Voltage	V_{OL}	I_{OUT} = 6mA		0.15	0.4	V
Logic Input Current		0 ≤ V_{IN} ≤ 6V	–1		+1	µA
SMBus Input Capacitance (SCL, SDA)				3		pF
SMBus Clock Frequency					3.4	MHz
SMBus Timeout			25	30	35	ms
SCL Falling Edge to SDA Valid Time					1	µs
DIGITAL INPUTS						
Input Capacitance				3		pF
Input Logic Levels						
Input High Voltage	V_{IH}		0.7(V+)		(V+)+0.5	V
Input Low Voltage	V_{IL}		–0.5		0.3(V+)	V
Leakage Input Current	I_{IN}	0V ≤ V_{IN} ≤ V+			1	µA
POWER SUPPLY						
Specified Voltage Range	V+		2.55		5.5	V
Quiescent Current	I_Q	0.0625 Conversions per Second		32	38	µA
		Eight Conversions per Second		400	525	µA
		Serial Bus Inactive, Shutdown Mode		3	10	µA
		Serial Bus Active, f_S = 400kHz, Shutdown Mode		90		µA
		Serial Bus Active, f_S = 3.4MHz, Shutdown Mode		350		µA
Undervoltage Lockout	UVLO		2.3	2.4	2.5	V
Power-On Reset Threshold	POR			1.6	2.3	V
TEMPERATURE RANGE						
Specified Range			–40		+125	°C
Storage Range			–60		+130	°C
Thermal Resistance	θ_{JA}	DSBGA		128		°C/W

(1) Tested with less than 5Ω effective series resistance and 100pF differential input capacitance.

Copyright © 2007–2012, Texas Instruments Incorporated

TMP421 PIN CONFIGURATION

DCN PACKAGE
SOT23-8
(TOP VIEW)

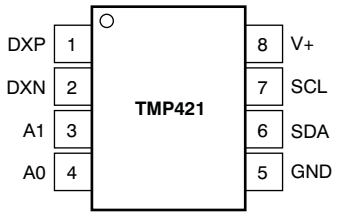

YZD PACKAGE
DSBGA-8
(TOP VIEW)

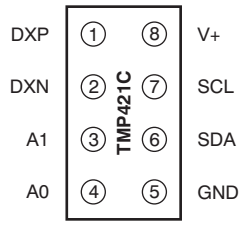

TMP421 PIN ASSIGNMENTS

TMP421		
NO.	**NAME**	**DESCRIPTION**
1	DXP	Positive connection to remote temperature sensor.
2	DXN	Negative connection to remote temperature sensor.
3	A1	Address pin
4	A0	Address pin
5	GND	Ground
6	SDA	Serial data line for SMBus, open-drain; requires pull-up resistor to V+.
7	SCL	Serial clock line for SMBus, open-drain; requires pull-up resistor to V+.
8	V+	Positive supply voltage (2.7V to 5.5V for the TMP421; 2.55V to 5.5V for the TMP421C)

TMP422 PIN CONFIGURATION

DCN PACKAGE
SOT23-8
(TOP VIEW)

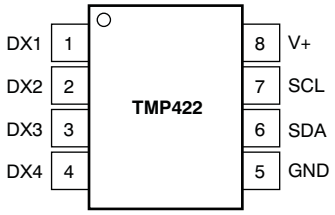

TMP422 PIN ASSIGNMENTS

TMP422		
NO.	**NAME**	**DESCRIPTION**
1	DX1	Channel 1 remote temperature sensor connection pin. Also sets the TMP422 address; see Table 10.
2	DX2	Channel 1 remote temperature sensor connection pin. Also sets the TMP422 address; see Table 10.
3	DX3	Channel 2 remote temperature sensor connection pin. Also sets the TMP422 address; see Table 10.
4	DX4	Channel 2 remote temperature sensor connection pin. Also sets the TMP422 address; see Table 10.
5	GND	Ground
6	SDA	Serial data line for SMBus, open-drain; requires pull-up resistor to V+.
7	SCL	Serial clock line for SMBus, open-drain; requires pull-up resistor to V+.
8	V+	Positive supply voltage (2.7V to 5.5V)

Copyright © 2007–2012, Texas Instruments Incorporated

TMP423 PIN CONFIGURATION

DCN PACKAGE
SOT23-8
(TOP VIEW)

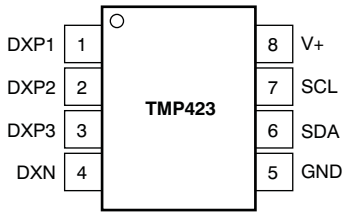

TMP423 PIN ASSIGNMENTS

TMP423		
NO.	**NAME**	**DESCRIPTION**
1	DXP1	Channel 1 positive connection to remote temperature sensor.
2	DXP2	Channel 2 positive connection to remote temperature sensor.
3	DXP3	Channel 3 positive connection to remote temperature sensor.
4	DXN	Common negative connection to remote temperature sensors, Channel 1, Channel 2, Channel 3.
5	GND	Ground
6	SDA	Serial data line for SMBus, open-drain; requires pull-up resistor to V+.
7	SCL	Serial clock line for SMBus, open-drain; requires pull-up resistor to V+.
8	V+	Positive supply voltage (2.7V to 5.5V)

Copyright © 2007–2012, Texas Instruments Incorporated

TYPICAL CHARACTERISTICS

At T_A = +25°C and V+ = +5.0V, unless otherwise noted.

REMOTE TEMPERATURE ERROR vs TEMPERATURE

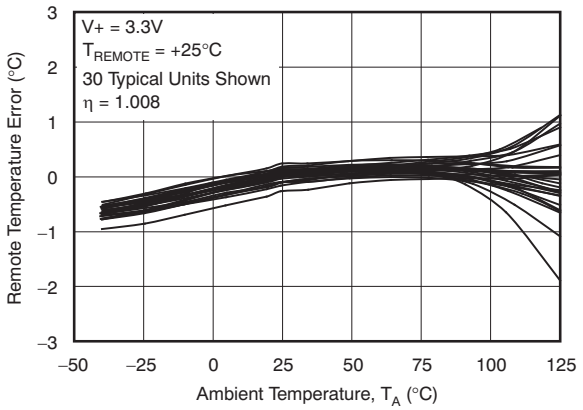

Figure 1.

LOCAL TEMPERATURE ERROR vs TEMPERATURE

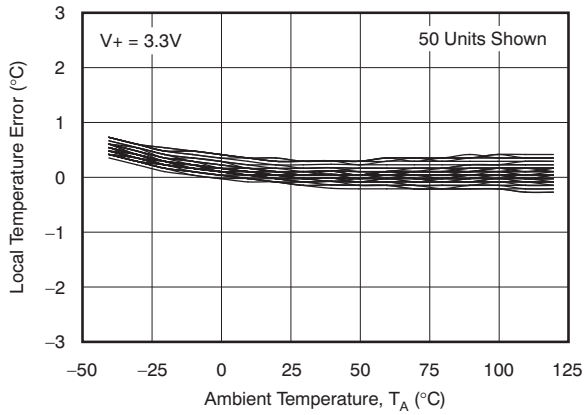

Figure 2.

REMOTE TEMPERATURE ERROR vs LEAKAGE RESISTANCE

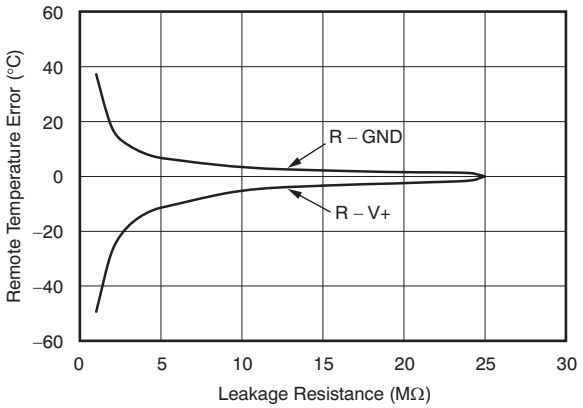

Figure 3.

REMOTE TEMPERATURE ERROR vs SERIES RESISTANCE (Diode-Connected Transistor, 2N3906 PNP)

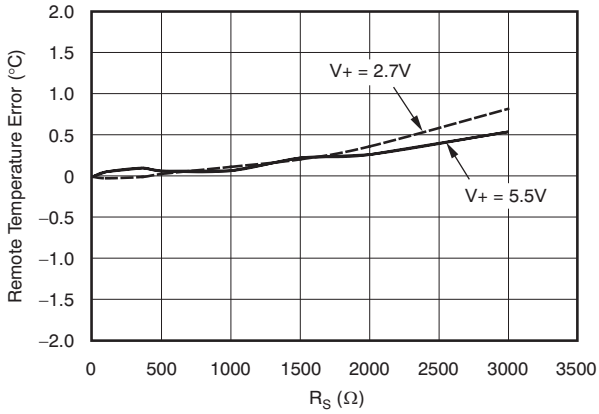

Figure 4.

TYPICAL CHARACTERISTICS (continued)

At T_A = +25°C and V+ = +5.0V, unless otherwise noted.

REMOTE TEMPERATURE ERROR vs SERIES RESISTANCE (GND Collector-Connected Transistor, 2N3906 PNP)

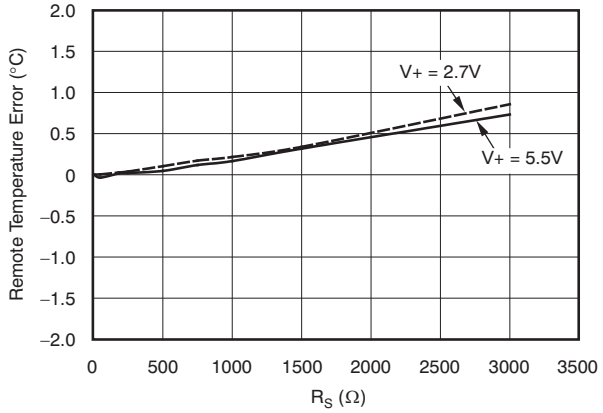

Figure 5.

REMOTE TEMPERATURE ERROR vs DIFFERENTIAL CAPACITANCE

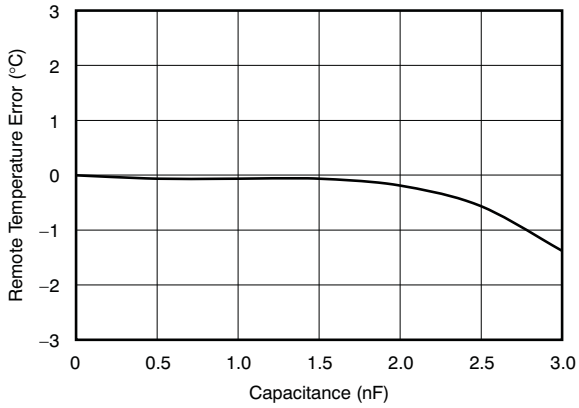

Figure 6.

TEMPERATURE ERROR vs POWER-SUPPLY NOISE FREQUENCY

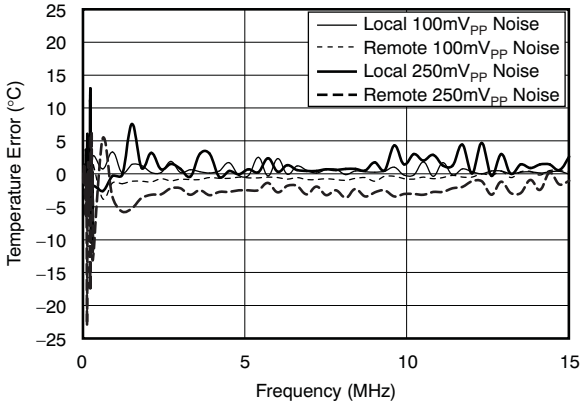

Figure 7.

QUIESCENT CURRENT vs CONVERSION RATE

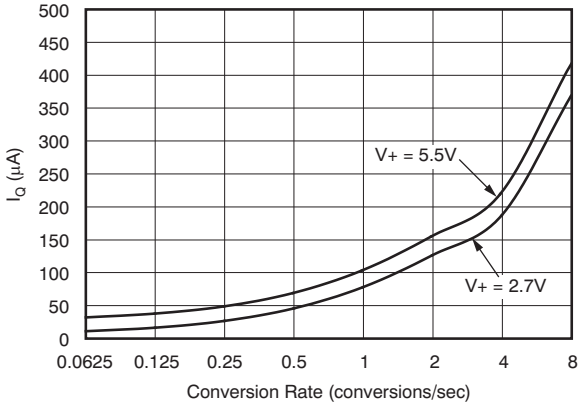

Figure 8.

SHUTDOWN QUIESCENT CURRENT vs SCL CLOCK FREQUENCY

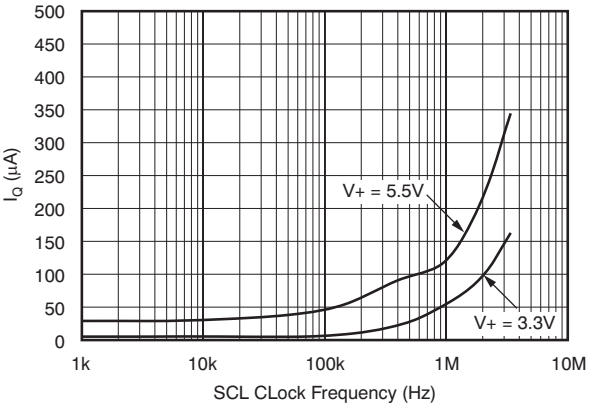

Figure 9.

SHUTDOWN QUIESCENT CURRENT vs SUPPLY VOLTAGE

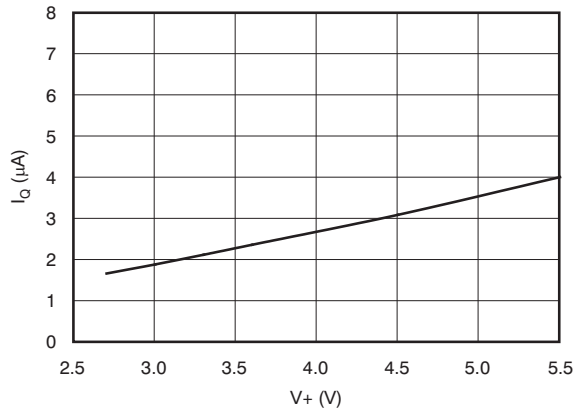

Figure 10.

Copyright © 2007–2012, Texas Instruments Incorporated

APPLICATION INFORMATION

The TMP421 is a two-channel digital temperature sensor that combines a local die temperature-measurement channel and a remote-junction temperature-measurement channel, and is available in SOT23-8 and DSBGA-8 packages. The TMP422 (three-channel), and TMP423 (four-channel) are digital temperature sensors that combine a local die temperature measurement channel and two or three remote junction temperature measurement channels, respectively, in a single SOT23-8 package. These devices are two-wire- and SMBus interface-compatible and are specified over a temperature range of –40°C to +125°C. The TMP421/22/23 each contain multiple registers for holding configuration information and temperature measurement results.

For proper remote temperature sensing operation, the TMP421 requires only a transistor connected between DXP and DXN pins. If the remote channel is not utilized, DXP can be left open or tied to GND.

The TMP422 requires transistors connected between DX1 and DX2 and between DX3 and DX4. Unused channels on the TMP422 must be connected to GND. The TMP423 requires a transistor connected to each positive channel (DXP1, DXP2, and DXP3), with the base of each channel tied to the common negative, DXN. For an unused channel, the TMP423 DXP pin can be left open or tied to GND.

The TMP421/22/23 SCL and SDA interface pins each require pull-up resistors as part of the communication bus. A 0.1µF power-supply bypass capacitor is recommended for local bypassing. Figure 11, Figure 12, and Figure 13 show typical configurations for the TMP421, TMP422, and TMP423, respectively.

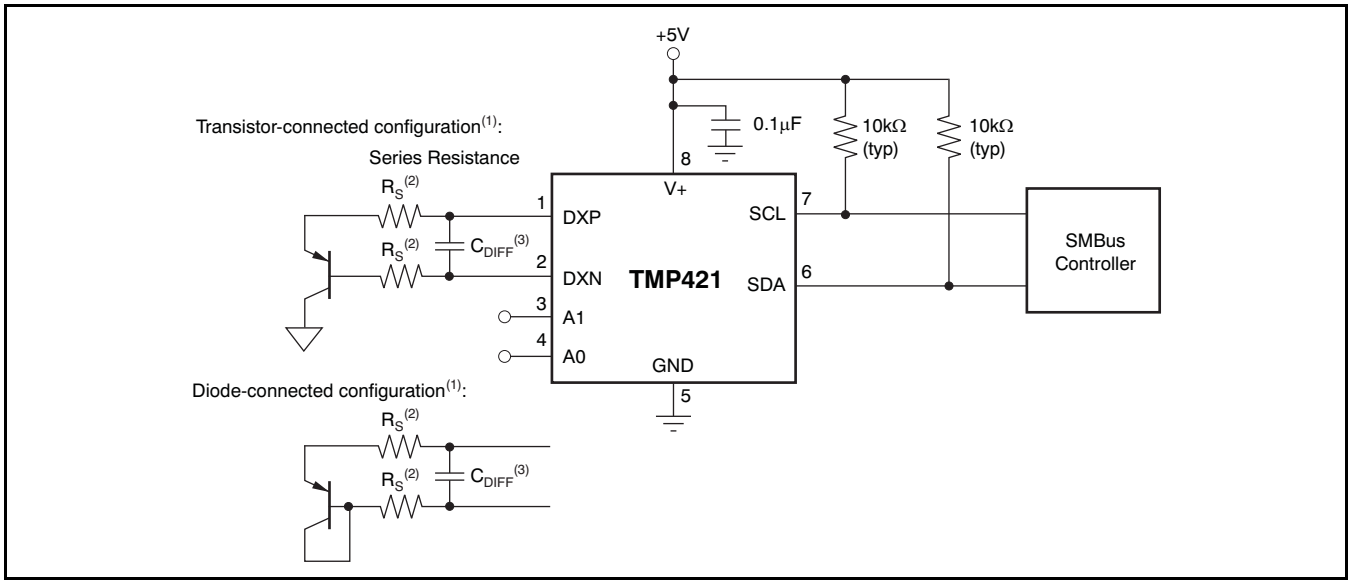

(1) Diode-connected configuration provides better settling time. Transistor-connected configuration provides better series resistance cancellation.

(2) R_S (optional) should be < 1.5kΩ in most applications. Selection of R_S depends on application; see the *Filtering* section.

(3) C_{DIFF} (optional) should be < 1000pF in most applications. Selection of C_{DIFF} depends on application; see the *Filtering* section and Figure 6, *Remote Temperature Error vs Differential Capacitance*.

Figure 11. TMP421 Basic Connections

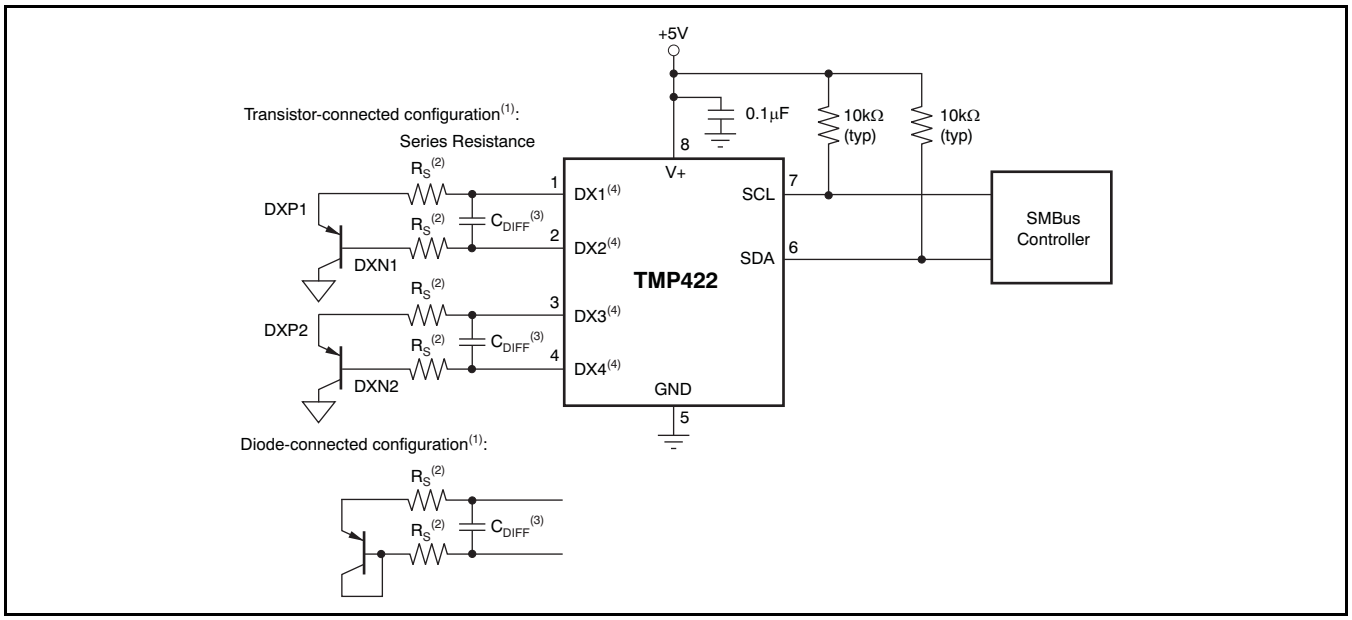

(1) Diode-connected configuration provides better settling time. Transistor-connected configuration provides better series resistance cancellation.

(2) R_S (optional) should be < 1.5kΩ in most applications. Selection of R_S depends on application; see the *Filtering* section.

(3) C_{DIFF} (optional) should be < 1000pF in most applications. Selection of C_{DIFF} depends on application; see the *Filtering* section and Figure 6, *Remote Temperature Error vs Differential Capacitance*.

(4) TMP422 SMBus slave address is *1001 100* when connected as shown.

Figure 12. TMP422 Basic Connections

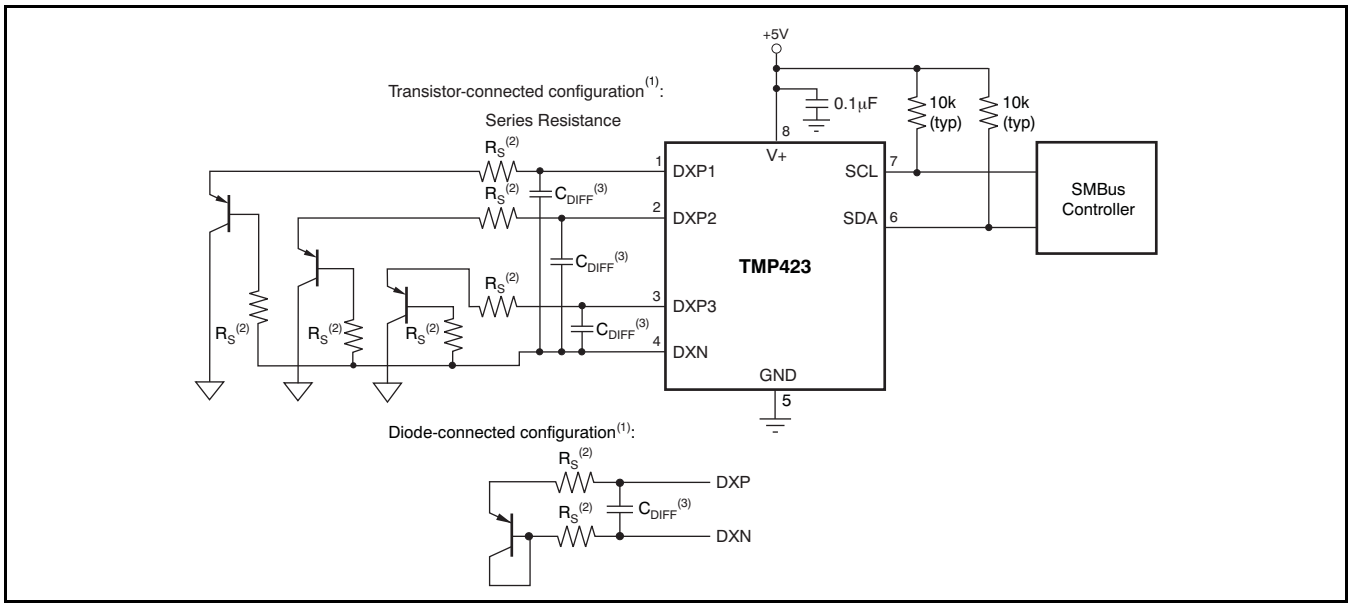

(1) Diode-connected configuration provides better settling time. Transistor-connected configuration provides better series resistance cancellation.

(2) R_S (optional) should be < 1.5kΩ in most applications. Selection of R_S depends on application; see the *Filtering* section.

(3) C_{DIFF} (optional) should be < 1000pF in most applications. Selection of C_{DIFF} depends on application; see the *Filtering* section and Figure 6, *Remote Temperature Error vs Differential Capacitance*.

Figure 13. TMP423 Basic Connections

Copyright © 2007–2012, Texas Instruments Incorporated

SERIES RESISTANCE CANCELLATION

Series resistance in an application circuit that typically results from printed circuit board (PCB) trace resistance and remote line length is automatically cancelled by the TMP421/22/23, preventing what would otherwise result in a temperature offset. A total of up to 3kΩ of series line resistance is cancelled by the TMP421/22/23, eliminating the need for additional characterization and temperature offset correction. See the two *Remote Temperature Error vs Series Resistance* typical characteristic curves (Figure 4 and Figure 5) for details on the effects of series resistance and power-supply voltage on sensed remote temperature error.

DIFFERENTIAL INPUT CAPACITANCE

The TMP421/22/23 tolerate differential input capacitance of up to 1000pF with minimal change in temperature error. The effect of capacitance on sensed remote temperature error is illustrated in Figure 6, *Remote Temperature Error vs Differential Capacitance*.

TEMPERATURE MEASUREMENT DATA

Temperature measurement data may be taken over an operating range of –40°C to +127°C for both local and remote locations.

However, measurements from –55°C to +150°C can be made both locally and remotely by reconfiguring the TMP421/22/23 for the extended temperature range, as described below.

Temperature data that result from conversions within the default measurement range are represented in binary form, as shown in Table 1, Standard Binary column. Note that although the device is rated to only measure temperatures down to –55°C, it may read temperatures below this level. However, any temperature below –64°C results in a data value of –64 (C0h). Likewise, temperatures above +127°C result in a value of 127 (7Fh). The device can be set to measure over an extended temperature range by changing bit 2 (RANGE) of Configuration Register 1 from low to high. The change in measurement range and data format from standard binary to extended binary occurs at the next temperature conversion. For data captured in the extended temperature range configuration, an offset of 64 (40h) is added to the standard binary value, as shown in the *Extended Binary* column of Table 1. This configuration allows measurement of temperatures as low as –64°C, and as high as +191°C; however, most temperature-sensing diodes only measure with the range of –55°C to +150°C. Additionally, the TMP421/22/23 are rated only for ambient temperatures ranging from –40°C to +125°C. Parameters in the Absolute Maximum Ratings table must be observed.

Table 1. Temperature Data Format (Local and Remote Temperature High Bytes)

TEMP (°C)	LOCAL/REMOTE TEMPERATURE REGISTER HIGH BYTE VALUE (1°C RESOLUTION)			
	STANDARD BINARY (1)		EXTENDED BINARY (2)	
	BINARY	HEX	BINARY	HEX
–64	1100 0000	C0	0000 0000	00
–50	1100 1110	CE	0000 1110	0E
–25	1110 0111	E7	0010 0111	27
0	0000 0000	00	0100 0000	40
1	0000 0001	01	0100 0001	41
5	0000 0101	05	0100 0101	45
10	0000 1010	0A	0100 1010	4A
25	0001 1001	19	0101 1001	59
50	0011 0010	32	0111 0010	72
75	0100 1011	4B	1000 1011	8B
100	0110 0100	64	1010 0100	A4
125	0111 1101	7D	1011 1101	BD
127	0111 1111	7F	1011 1111	BF
150	0111 1111	7F	1101 0110	D6
175	0111 1111	7F	1110 1111	EF
191	0111 1111	7F	1111 1111	FF

(1) Resolution is 1°C/count. Negative numbers are represented in two's complement format.
(2) Resolution is 1°C/count. All values are unsigned with a –64°C offset.

Copyright © 2007–2012, Texas Instruments Incorporated

Both local and remote temperature data use two bytes for data storage. The high byte stores the temperature with 1°C resolution. The second or low byte stores the decimal fraction value of the temperature and allows a higher measurement resolution, as shown in Table 2. The measurement resolution for the both the local and remote channels is 0.0625°C, and is not adjustable.

Table 2. Decimal Fraction Temperature Data Format (Local and Remote Temperature Low Bytes)

TEMP (°C)	TEMPERATURE REGISTER LOW BYTE VALUE (0.0625°C RESOLUTION)(1)	
	STANDARD AND EXTENDED BINARY	HEX
0	0000 0000	00
0.0625	0001 0000	10
0.1250	0010 0000	20
0.1875	0011 0000	30
0.2500	0100 0000	40
0.3125	0101 0000	50
0.3750	0110 0000	60
0.4375	0111 0000	70
0.5000	1000 0000	80
0.5625	1001 0000	90
0.6250	1010 0000	A0
0.6875	1011 0000	B0
0.7500	1100 0000	C0
0.8125	1101 0000	D0
0.8750	1110 0000	E0
0.9385	1111 0000	F0

(1) Resolution is 0.0625°C/count. All possible values are shown.

Standard Binary to Decimal Temperature Data Calculation Example

High byte conversion (for example, 0111 0011):

Convert the right-justified binary high byte to hexadecimal.

From hexadecimal, multiply the first number by $16^0 = 1$ and the second number by $16^1 = 16$.

The sum equals the decimal equivalent.

0111 0011b → 73h → $(3 \times 16^0) + (7 \times 16^1) = 115$

Low byte conversion (for example, 0111 0000):

To convert the left-justified binary low-byte to decimal, use bits 7 through 4 and ignore bits 3 through 0 because they do not affect the value of the number.

0111b → $(0 \times 1/2)^1 + (1 \times 1/2)^2 + (1 \times 1/2)^3 + (1 \times 1/2)^4 = 0.4375$

Note that the final numerical result is the sum of the high byte and low byte. In negative temperatures, the unsigned low byte adds to the negative high byte to result in a value less than the high byte (for instance, –15 + 0.75 = –14.25, not –15.75).

Standard Decimal to Binary Temperature Data Calculation Example

For positive temperatures (for example, +20°C):

(+20°C)/(+1°C/count) = 20 → 14h → 0001 0100

Convert the number to binary code with 8-bit, right-justified format, and MSB = '0' to denote a positive sign.

+20°C is stored as 0001 0100 → 14h.

For negative temperatures (for example, –20°C):

(|–20|)/(+1°C/count) = 20 → 14h → 0001 0100

Generate the two's complement of a negative number by complementing the absolute value binary number and adding 1.

–20°C is stored as 1110 1100 → ECh.

REGISTER INFORMATION

The TMP421/22/23 contain multiple registers for holding configuration information, temperature measurement results, and status information. These registers are described in Figure 14 and Table 3.

POINTER REGISTER

Figure 14 shows the internal register structure of the TMP421/22/23. The 8-bit Pointer Register is used to address a given data register. The Pointer Register identifies which of the data registers should respond to a read or write command on the two-wire bus. This register is set with every write command. A write command must be issued to set the proper value in the Pointer Register before executing a read command. Table 3 describes the pointer address of the TMP421/22/23 registers. The power-on reset (POR) value of the Pointer Register is 00h (0000 0000b).

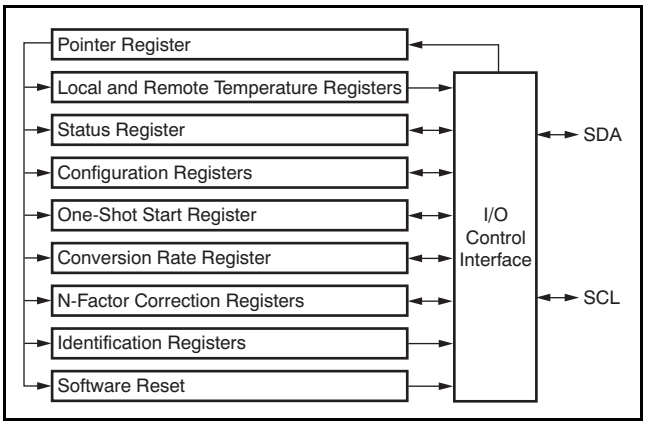

Figure 14. Internal Register Structure

Copyright © 2007–2012, Texas Instruments Incorporated

Table 3. Register Map

POINTER (HEX)	POR (HEX)	BIT DESCRIPTION								REGISTER DESCRIPTION
		7	6	5	4	3	2	1	0	
00	00	LT11	LT10	LT9	LT8	LT7	LT6	LT5	LT4	Local Temperature (High Byte) (1)
01	00	RT11	RT10	RT9	RT8	RT7	RT6	RT5	RT4	Remote Temperature 1 (High Byte)(1)
02	00	RT11	RT10	RT9	RT8	RT7	RT6	RT5	RT4	Remote Temperature 2 (High Byte)(1) (2) (3)
03	00	RT11	RT10	RT9	RT8	RT7	RT6	RT5	RT4	Remote Temperature 3 (High Byte)(1) (3)
08		BUSY	0	0	0	0	0	0	0	Status Register
09	00	0	SD	0	0	0	RANGE	0	0	Configuration Register 1
0A	1C/3C(2)/ 7C(3)	0	REN3(3)	REN2(2) (3)	REN	LEN	RC	0	0	Configuration Register 2
0B	07	0	0	0	0	0	R2	R1	R0	Conversion Rate Register
0F		X	X	X	X	X	X	X	X	One-Shot Start(4)
10	00	LT3	LT2	LT1	LT0	0	0	$\overline{\text{PVLD}}$	0	Local Temperature (Low Byte)
11	00	RT3	RT2	RT1	RT0	0	0	$\overline{\text{PVLD}}$	OPEN	Remote Temperature 1 (Low Byte)
12	00	RT3	RT2	RT1	RT0	0	0	$\overline{\text{PVLD}}$	OPEN	Remote Temperature 2 (Low Byte)(2) (3)
13	00	RT3	RT2	RT1	RT0	0	0	$\overline{\text{PLVD}}$	OPEN	Remote Temperature 3 (Low Byte)(3)
21	00	NC7	NC6	NC5	NC4	NC3	NC2	NC1	NC0	N Correction 1
22	00	NC7	NC6	NC5	NC4	NC3	NC2	NC1	NC0	N Correction 2(2) (3)
23	00	NC7	NC6	NC5	NC4	NC3	NC2	NC1	NC0	N Correction 3(3)
FC		X	X	X	X	X	X	X	X	Software Reset(5)
FE	55	0	1	0	1	0	1	0	1	Manufacturer ID
FF	21	0	0	1	0	0	0	0	1	TMP421 Device ID
		0	0	1	0	0	0	1	0	TMP422 Device ID
		0	0	1	0	0	0	1	1	TMP423 Device ID

(1) Compatible with Two-Byte Read; see Figure 19.
(2) TMP422.
(3) TMP423.
(4) X = undefined. Writing any value to this register initiates a one-shot start; see the *One-Shot Conversion* section.
(5) X = undefined. Writing any value to this register initiates a software reset; see the *Software Reset* section.

TEMPERATURE REGISTERS

The TMP421/22/23 have multiple 8-bit registers that hold temperature measurement results. The local channel and each of the remote channels have a high byte register that contains the most significant bits (MSBs) of the temperature analog-to-digital converter (ADC) result and a low byte register that contains the least significant bits (LSBs) of the temperature ADC result. The local channel high byte address is 00h; the local channel low byte address is 10h. The remote channel high byte is at address 01h; the remote channel low byte address is 11h. For the TMP422, the second remote channel high byte address is 02h; the second remote channel low byte is 12h. The TMP 423 uses the same local and remote address as the TMP421 and TMP422, with the third remote channel high byte of 03h; the third remote channel low byte is 13h. These registers are read-only and are updated by the ADC each time a temperature measurement is completed.

The TMP421/22/23 contain circuitry to assure that a low byte register read command returns data from the same ADC conversion as the immediately preceding high byte read command. This assurance remains valid only until another register is read. For proper operation, the high byte of a temperature register should be read first. The low byte register should be read in the next read command. The low byte register may be left unread if the LSBs are not needed. Alternatively, the temperature registers may be read as a 16-bit register by using a single two-byte read command from address 00h for the local channel result, or from address 01h for the remote channel result (02h for the second remote channel result, and 03h for the third remote channel). The high byte is output first, followed by the low byte. Both bytes of this read operation are from the same ADC conversion. The power-on reset value of all temperature registers is 00h.

Copyright © 2007–2012, Texas Instruments Incorporated

STATUS REGISTER

The Status Register reports the state of the temperature ADCs. Table 4 summarizes the Status Register bits. The Status Register is read-only, and is read by accessing pointer address 08h.

The BUSY bit = '1' if the ADC is making a conversion; it is set to '0' if the ADC is not converting.

CONFIGURATION REGISTER 1

Configuration Register 1 (pointer address 09h) sets the temperature range and controls the shutdown mode. The Configuration Register is set by writing to pointer address 09h and read by reading from pointer address 09h. Table 5 summarizes the bits of Configuration Register 1.

The shutdown (SD) bit (bit 6) enables or disables the temperature measurement circuitry. If SD = '0', the TMP421/22/23 convert continuously at the rate set in the conversion rate register. When SD is set to '1', the TMP421/22/23 stop converting when the current conversion sequence is complete and enter a shutdown mode. When SD is set to '0' again, the TMP421/22/23 resume continuous conversions. When SD = '1', a single conversion can be started by writing to the One-Shot Register. See the *One-Shot Conversion* section for more information.

The temperature range is set by configuring the RANGE bit (bit 2) of the Configuration Register. Setting this bit low configures the TMP421/22/23 for the standard measurement range (–40°C to +127°C); temperature conversions will be stored in the standard binary format. Setting bit 2 high configures the TMP421/22/23 for the extended measurement range (–55°C to +150°C); temperature conversions will be stored in the extended binary format (see Table 1).

The remaining bits of the Configuration Register are reserved and must always be set to '0'. The power-on reset value for this register is 00h.

CONFIGURATION REGISTER 2

Configuration Register 2 (pointer address 0Ah) controls which temperature measurement channels are enabled and whether the external channels have the resistance correction feature enabled or not. Table 6 summarizes the bits of Configuration Register 2.

Table 4. Status Register Format

STATUS REGISTER (Read = 08h, Write = NA)								
BIT #	**D7**	**D6**	**D5**	**D4**	**D3**	**D2**	**D1**	**D0**
BIT NAME	BUSY	0	0	0	0	0	0	0
POR VALUE	0 (1)	0	0	0	0	0	0	0

(1) **FOR TMP421/TMP423:** The BUSY changes to '1' almost immediately (< 100µs) following power-up, as the TMP421/TMP423 begin the first temperature conversion. It is high whenever the TMP421/TMP423 convert a temperature reading.
FOR TMP422: The BUSY bit changes to '1' approximately 1ms following power-up. It is high whenever the TMP422 converts a temperature reading.

Table 5. Configuration Register 1 Bit Descriptions

CONFIGURATION REGISTER 1 (Read/Write = 09h, POR = 00h)			
BIT	**NAME**	**FUNCTION**	**POWER-ON RESET VALUE**
7	Reserved	—	0
6	SD	0 = Run 1 = Shut Down	0
5, 4, 3	Reserved	—	0
2	Temperature Range	0 = –40°C to +127°C 1 = –55°C to +150°C	0
1, 0	Reserved	—	0

Copyright © 2007–2012, Texas Instruments Incorporated

The RC bit (bit 2) enables the resistance correction feature for the external temperature channels. If RC = '1', series resistance correction is enabled; if RC = '0', resistance correction is disabled. Resistance correction should be enabled for most applications. However, disabling the resistance correction may yield slightly improved temperature measurement noise performance, and reduce conversion time by about 50%, which could lower power consumption when conversion rates of two per second or less are selected.

The LEN bit (bit 3) enables the local temperature measurement channel. If LEN = '1', the local channel is enabled; if LEN = '0', the local channel is disabled.

The REN bit (bit 4) enables external temperature measurement for channel 1. If REN = '1', the first external channel is enabled; if REN = '0', the external channel is disabled.

For the TMP422 and TMP423 only, the REN2 bit (bit 5) enables the second external measurement channel. If REN2 = '1', the second external channel is enabled; if REN2 = '0', the second external channel is disabled.

For the TMP423 only, the REN3 bit (bit 6) enables the third external measurement channel. If REN3 = '1', the third external channel is enabled; if REN3 = '0', the third external channel is disabled.

The temperature measurement sequence is: local channel, external channel 1, external channel 2, external channel 3, shutdown, and delay (to set conversion rate, if necessary). The sequence starts over with the local channel. If any of the channels are disabled, they are bypassed in the sequence.

CONVERSION RATE REGISTER

The Conversion Rate Register (pointer address 0Bh) controls the rate at which temperature conversions are performed. This register adjusts the idle time between conversions but not the conversion timing itself, thereby allowing the TMP421/22/23 power dissipation to be balanced with the temperature register update rate. Table 7 describes the conversion rate options and corresponding current consumption. A one-shot command can be used during the idle time between conversions to immediately start temperature conversions on all enabled channels.

Table 6. Configuration Register 2 Bit Descriptions

CONFIGURATION REGISTER 2 (Read/Write = 0Ah, POR = 1Ch for TMP421; 3Ch for TMP422; 7Ch for TMP423)			
BIT	**NAME**	**FUNCTION**	**POWER-ON RESET VALUE**
7	Reserved	—	0
6	REN3	0 = External Channel 3 Disabled 1 = External Channel 3 Enabled	1 (TMP423) 0 (TMP421, TMP422)
5	REN2	0 = External Channel 2 Disabled 1 = External Channel 2 Enabled	1 (TMP422, TMP423) 0 (TMP421)
4	REN	0 = External Channel 1 Disabled 1 = External Channel 1 Enabled	1
3	LEN	0 = Local Channel Disabled 1 = Local Channel Enabled	1
2	RC	0 = Resistance Correction Disabled 1 = Resistance Correction Enabled	1
1, 0	Reserved	—	0

Copyright © 2007–2012, Texas Instruments Incorporated

Table 7. Conversion Rate Register

CONVERSION RATE REGISTER (Read/Write = 0Bh, POR = 07h)										
									AVERAGE I_Q (TYP) (µA)	
R7	R6	R5	R4	R3	R2	R1	R0	CONVERSIONS/SEC	V+ = 2.7V	V+ = 5.5V
0	0	0	0	0	0	0	0	0.0625	11	32
0	0	0	0	0	0	0	1	0.125	17	38
0	0	0	0	0	0	1	0	0.25	28	49
0	0	0	0	0	0	1	1	0.5	47	69
0	0	0	0	0	1	0	0	1	80	103
0	0	0	0	0	1	0	1	2	128	155
0	0	0	0	0	1	1	0	4(1)	190	220
0	0	0	0	0	1	1	1	8(2)	373	413

(1) Conversion rate shown is for only one or two enabled measurement channels. When three channels are enabled, the conversion rate is 2 and 2/3 conversions-per-second. When four channels are enabled, the conversion rate is 2 per second.
(2) Conversion rate shown is for only one enabled measurement channel. When two channels are enabled, the conversion rate is 4 conversions-per-second. When three channels are enabled, the conversion rate is 2 and 2/3 conversions-per-second. When four channels are enabled, the conversion rate is 2 conversions-per-second.

ONE-SHOT CONVERSION

When the TMP421/22/23 are in shutdown mode (SD = 1 in the Configuration Register 1), a single conversion is started on all enabled channels by writing any value to the One-Shot Start Register, pointer address 0Fh. This write operation starts one conversion; the TMP421/22/23 return to shutdown mode when that conversion completes. The value of the data sent in the write command is irrelevant and is not stored by the TMP421/22/23. When the TMP421/22/23 are in shutdown mode, the conversion sequence currently in process must be completed before a one-shot command can be issued. One-shot commands issued during a conversion are ignored.

η-FACTOR CORRECTION REGISTER

The TMP421/22/23 allow for a different η-factor value to be used for converting remote channel measurements to temperature. The remote channel uses sequential current excitation to extract a differential V_{BE} voltage measurement to determine the temperature of the remote transistor. Equation 1 describes this voltage and temperature.

$$V_{BE2} - V_{BE1} = \frac{\eta kT}{q} \ln\left(\frac{I_2}{I_1}\right) \tag{1}$$

The value η in Equation 1 is a characteristic of the particular transistor used for the remote channel. The power-on reset value for the TMP421/22/23 is η = 1.008. The value in the η-Factor Correction Register may be used to adjust the effective η-factor according to Equation 2 and Equation 3.

$$\eta_{eff} = \left(\frac{1.008 \times 300}{300 - N_{ADJUST}}\right) \tag{2}$$

$$N_{ADJUST} = 300 - \left(\frac{300 \times 1.008}{\eta_{eff}}\right) \tag{3}$$

The η-correction value must be stored in two's-complement format, yielding an effective data range from –128 to +127. The *n*-correction value may be written to and read from pointer address 21h. The η-correction value for the second remote channel (TMP422 and TMP423) may be written and read from pointer address 22h. The η-correction value for the third remote channel (TMP423 only) may be written to and read from pointer address 23h. The register power-on reset value is 00h, thus having no effect unless the register is written to.

Copyright © 2007–2012, Texas Instruments Incorporated

SOFTWARE RESET

The TMP421/22/23 may be reset by writing any value to the Software Reset Register (pointer address FCh). This action restores the power-on reset state to all of the TMP421/22/23 registers as well as aborts any conversion in process. The TMP421/22/23 also support reset via the two-wire general call address (0000 0000). The *General Call Reset* section contains more information.

Table 8. η-Factor Range

N_{ADJUST}			
BINARY	**HEX**	**DECIMAL**	**η**
0111 1111	7F	127	1.747977
0000 1010	0A	10	1.042759
0000 1000	08	8	1.035616
0000 0110	06	6	1.028571
0000 0100	04	4	1.021622
0000 0010	02	2	1.014765
0000 0001	01	1	1.011371
0000 0000	00	0	1.008
1111 1111	FF	–1	1.004651
1111 1110	FE	–2	1.001325
1111 1100	FC	–4	0.994737
1111 1010	FA	–6	0.988235
1111 1000	F8	–8	0.981818
1111 0110	F6	–10	0.975484
1000 0000	80	–128	0.706542

GENERAL CALL RESET

The TMP421/22/23 support reset via the two-wire General Call address 00h (0000 0000b). The TMP421/22/23 acknowledge the General Call address and respond to the second byte. If the second byte is 06h (0000 0110b), the TMP421/22/23 execute a software reset. This software reset restores the power-on reset state to all TMP421/22/23 registers, and aborts any conversion in progress. The TMP421/22/23 take no action in response to other values in the second byte.

IDENTIFICATION REGISTERS

The TMP421/22/23 allow for the two-wire bus controller to query the device for manufacturer and device IDs to enable software identification of the device at the particular two-wire bus address. The manufacturer ID is obtained by reading from pointer address FEh. The device ID is obtained by reading from pointer address FFh. The TMP421/22/23 each return 55h for the manufacturer code. The TMP421 returns 21h for the device ID; the TMP422 returns 22h for the device ID; and the TMP423 returns 23h for the device ID. These registers are read-only.

BUS OVERVIEW

The TMP421/22/23 are SMBus interface-compatible. In SMBus protocol, the device that initiates the transfer is called a master, and the devices controlled by the master are slaves. The bus must be controlled by a master device that generates the serial clock (SCL), controls the bus access, and generates the START and STOP conditions.

To address a specific device, a START condition is initiated. START is indicated by pulling the data line (SDA) from a high-to-low logic level while SCL is high. All slaves on the bus shift in the slave address byte, with the last bit indicating whether a read or write operation is intended. During the ninth clock pulse, the slave being addressed responds to the master by generating an Acknowledge and pulling SDA low.

Data transfer is then initiated and sent over eight clock pulses followed by an Acknowledge bit. During data transfer SDA must remain stable while SCL is high, because any change in SDA while SCL is high is interpreted as a control signal.

Once all data have been transferred, the master generates a STOP condition. STOP is indicated by pulling SDA from low to high, while SCL is high.

SERIAL INTERFACE

The TMP421/22/23 operate only as a slave device on either the two-wire bus or the SMBus. Connections to either bus are made via the open-drain I/O lines, SDA and SCL. The SDA and SCL pins feature integrated spike suppression filters and Schmitt triggers to minimize the effects of input spikes and bus noise. The TMP421/22/23 support the transmission protocol for fast (1kHz to 400kHz) and high-speed (1kHz to 3.4MHz) modes. All data bytes are transmitted MSB first.

Copyright © 2007–2012, Texas Instruments Incorporated

SERIAL BUS ADDRESS

To communicate with the TMP421/22/23, the master must first address slave devices via a slave address byte. The slave address byte consists of seven address bits, and a direction bit indicating the intent of executing a read or write operation.

Two-Wire Interface Slave Device Addresses

The TMP421 supports nine slave device addresses and the TMP422 supports four slave device addresses. The TMP423 has one of two factory-preset slave addresses.

The slave device address for the TMP421 is set by the A1 and A0 pins according to Table 9.

The slave device address for the TMP422 is set by the connections between the external transistors and the TMP422 according to Figure 15 and Table 10. If one of the channels is unused, the respective DXP connection should be connected to GND, and the DXN connection should be left unconnected. The polarity of the transistor for external channel 2 (pins 3 and 4) sets the least significant bit of the slave address. The polarity of the transistor for external channel 1 (pins 1 and 2) sets the next least significant bit of the slave address.

Table 9. TMP421 Slave Address Options

TWO-WIRE SLAVE ADDRESS	A1	A0
0011 100	Float	0
0011 101	Float	1
0011 110	0	Float
0011 111	1	Float
0101 010	Float	Float
1001 100	0	0
1001 101	0	1
1001 110	1	0
1001 111	1	1

Table 10. TMP422 Slave Address Options

TWO-WIRE SLAVE ADDRESS	DX1	DX2	DX3	DX4
1001 100	DXP1	DXN1	DXP2	DXN2
1001 101	DXP1	DXN1	DXN2	DXP2
1001 110	DXN1	DXP1	DXP2	DXN2
1001 111	DXN1	DXP1	DXN2	DXP2

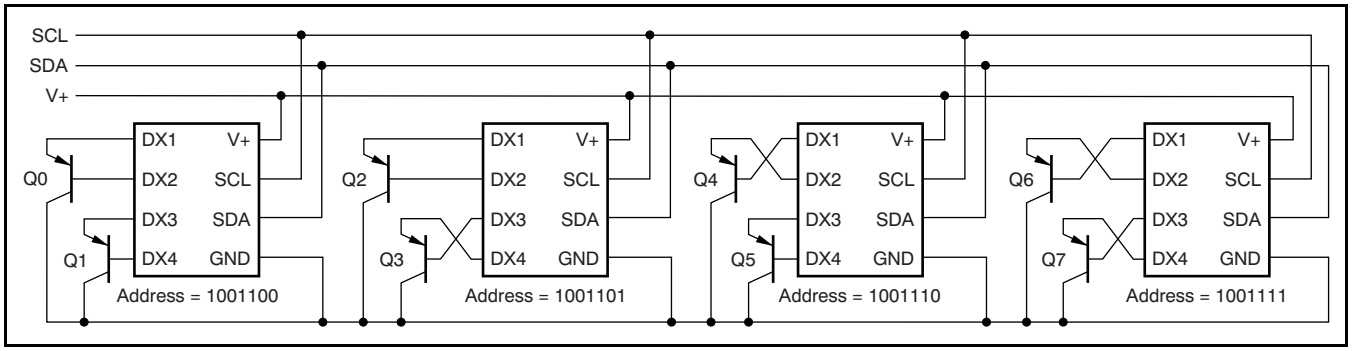

Figure 15. TMP422 Connections for Device Address Setup

Copyright © 2007–2012, Texas Instruments Incorporated

The TMP422 checks the polarity of the external transistor at power-on, or after software reset, by forcing current to pin 1 while connecting pin 2 to approximately 0.6V. If the voltage on pin 1 does not pull up to near the V+ of the TMP422, pin 1 functions as DXP for channel 1, and the second LSB of the slave address is '0'. If the voltage on pin 1 does pull up to near V+, the TMP422 forces current to pin 2 while connecting pin 1 to 0.6V. If the voltage on pin 2 does not pull up to near V+, the TMP422 uses pin 2 for DXP of channel 1, and sets the second LSB of the slave address to '1'. If both pins are shorted to GND or if both pins are open, the TMP422 uses pin 1 as DXP and sets the address bit to '0'. This process is then repeated for channel 2 (pins 3 and 4).

If the TMP422 is to be used with transistors that are located on another IC (such as a CPU, DSP, or graphics processor), it is recommended to use pin 1 or pin 3 as DXP to ensure correct address detection. If the other IC has a lower supply voltage or is not powered when the TMP422 tries to detect the slave address, a protection diode may turn on during the detection process and the TMP422 may incorrectly choose the DXP pin and corresponding slave address. Using pin 1 and/or pin 3 for transistors that are on other ICs ensures correct operation independent of supply sequencing or levels.

The TMP423 has a factory-preset slave address. The TMP423A slave address is 1001100b, and the TMP423B slave address is 1001101b. The configuration of the DXP and DXN channels are independent of the address. Unused DXP channels can be left open or tied to GND.

READ/WRITE OPERATIONS

Accessing a particular register on the TMP421/22/23 is accomplished by writing the appropriate value to the Pointer Register. The value for the Pointer Register is the first byte transferred after the slave address byte with the R/$\overline{W}$ bit low. Every write operation to the TMP421/22/23 requires a value for the Pointer Register (see Figure 17).

When reading from the TMP421/22/23, the last value stored in the Pointer Register by a write operation is used to determine which register is read by a read operation. To change which register is read for a read operation, a new value must be written to the Pointer Register. This transaction is accomplished by issuing a slave address byte with the R/$\overline{W}$ bit low, followed by the Pointer Register byte; no additional data are required. The master can then generate a START condition and send the slave address byte with the R/$\overline{W}$ bit high to initiate the read command. See Figure 19 for details of this sequence. If repeated reads from the same register are desired, it is not necessary to continually send the Pointer Register bytes, because the TMP421/22/23 retain the Pointer Register value until it is changed by the next write operation. Note that register bytes are sent MSB first, followed by the LSB.

Read operations should be terminated by issuing a Not-Acknowledge command at the end of the last byte to be read. For a single-byte operation, the master should leave the SDA line high during the Acknowledge time of the first byte that is read from the slave. For a two-byte read operation, the master must pull SDA low during the Acknowledge time of the first byte read, and should leave SDA high during the Acknowledge time of the second byte read from the slave.

Copyright © 2007–2012, Texas Instruments Incorporated

TIMING DIAGRAMS

The TMP421/22/23 are two-wire and SMBus-compatible. Figure 16 to Figure 19 describe the timing for various operations on the TMP421/22/23. Parameters for Figure 16 are defined in Table 11. Bus definitions are:

Bus Idle: Both SDA and SCL lines remain high.

Start Data Transfer: A change in the state of the SDA line, from high to low, while the SCL line is high, defines a START condition. Each data transfer initiates with a START condition. Denoted as *S* in Figure 16.

Stop Data Transfer: A change in the state of the SDA line from low to high while the SCL line is high defines a STOP condition. Each data transfer terminates with a repeated START or STOP condition. Denoted as *P* in Figure 16.

Data Transfer: The number of data bytes transferred between a START and a STOP condition is not limited and is determined by the master device. The receiver acknowledges data transfer.

Acknowledge: Each receiving device, when addressed, is obliged to generate an Acknowledge bit. A device that acknowledges must pull down the SDA line during the Acknowledge clock pulse in such a way that the SDA line is stable low during the high period of the Acknowledge clock pulse. Setup and hold times must be taken into account. On a master receive, data transfer termination can be signaled by the master generating a Not-Acknowledge on the last byte that has been transmitted by the slave.

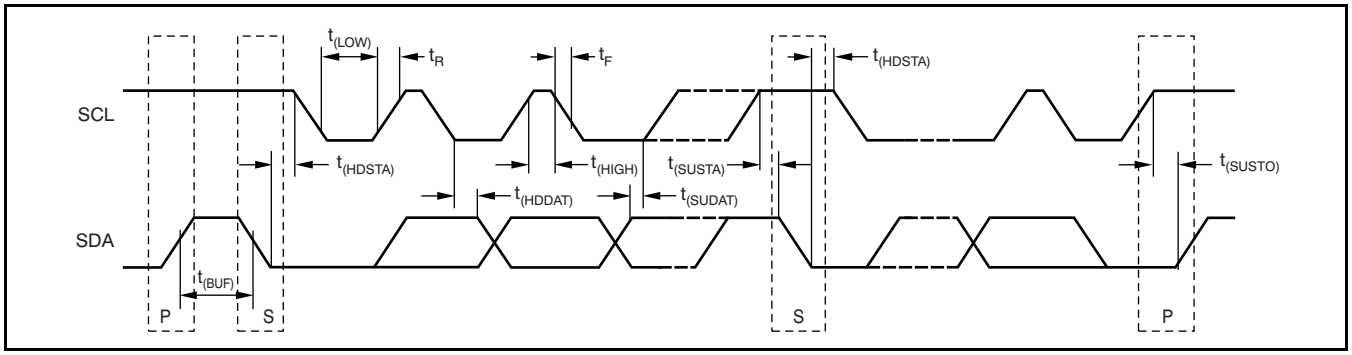

Figure 16. Two-Wire Timing Diagram

Table 11. Timing Characteristics for Figure 16

PARAMETER		FAST MODE		HIGH-SPEED MODE		UNIT
		MIN	MAX	MIN	MAX	
SCL Operating Frequency	$f_{(SCL)}$	0.001	0.4	0.001	3.4	MHz
Bus Free Time Between STOP and START Condition	$t_{(BUF)}$	600		160		ns
Hold time after repeated START condition. After this period, the first clock is generated.	$t_{(HDSTA)}$	100		100		ns
Repeated START Condition Setup Time	$t_{(SUSTA)}$	100		100		ns
STOP Condition Setup Time	$t_{(SUSTO)}$	100		100		ns
Data Hold Time	$t_{(HDDAT)}$	0 (1)		0 (2)		ns
Data Setup Time	$t_{(SUDAT)}$	100		10		ns
SCL Clock LOW Period	$t_{(LOW)}$	1300		160		ns
SCL Clock HIGH Period	$t_{(HIGH)}$	600		60		ns
Clock/Data Fall Time	t_F		300		160	ns
Clock/Data Rise Time	t_R		300		160	ns
for SCL ≤ 100kHz	t_R		1000			

(1) For cases with fall time of SCL less than 20ns and/or the rise or fall time of SDA less than 20ns, the hold time should be greater than 20ns.
(2) For cases with a fall time of SCL less than 10ns and/or the rise or fall time of SDA less than 10ns, the hold time should be greater than 10ns.

Copyright © 2007–2012, Texas Instruments Incorporated

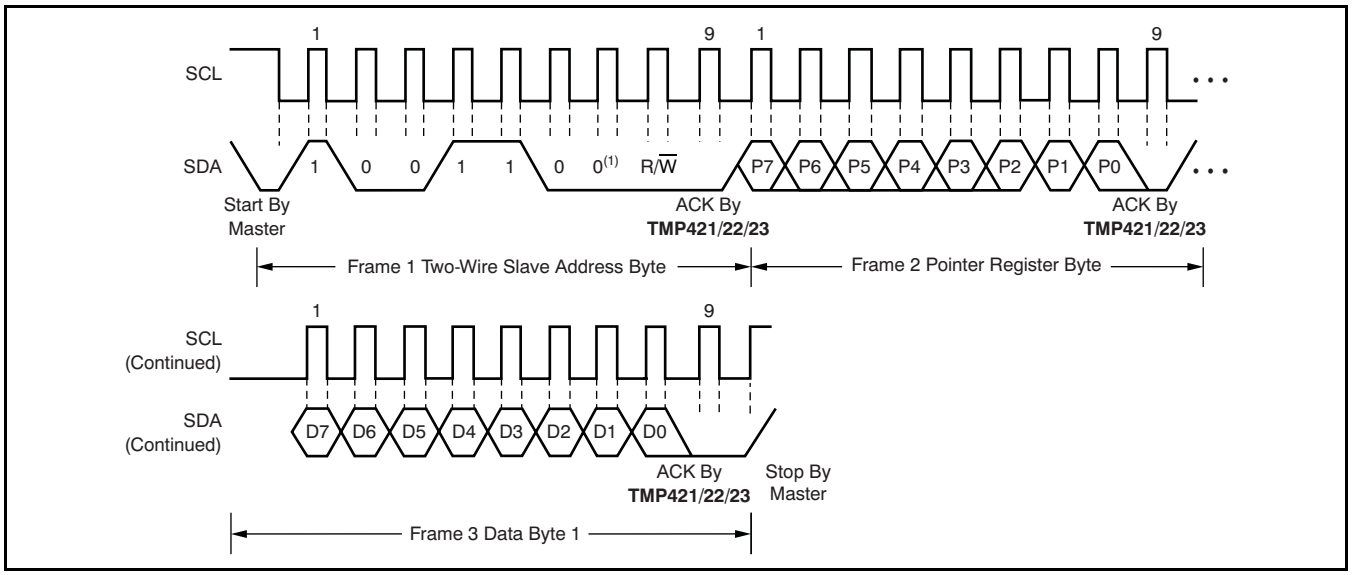

(1) Slave address 1001100 shown.

Figure 17. Two-Wire Timing Diagram for Write Word Format

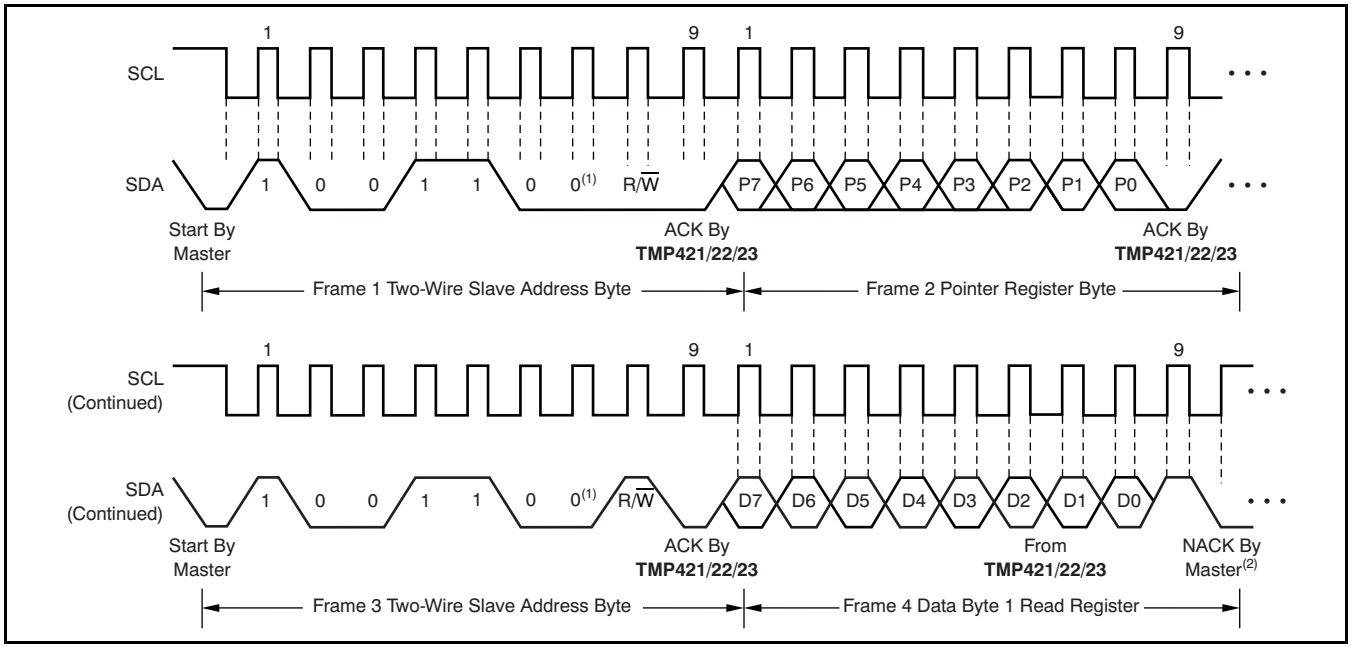

(1) Slave address 1001100 shown.

(2) Master should leave SDA high to terminate a single-byte read operation.

Figure 18. Two-Wire Timing Diagram for Single-Byte Read Format

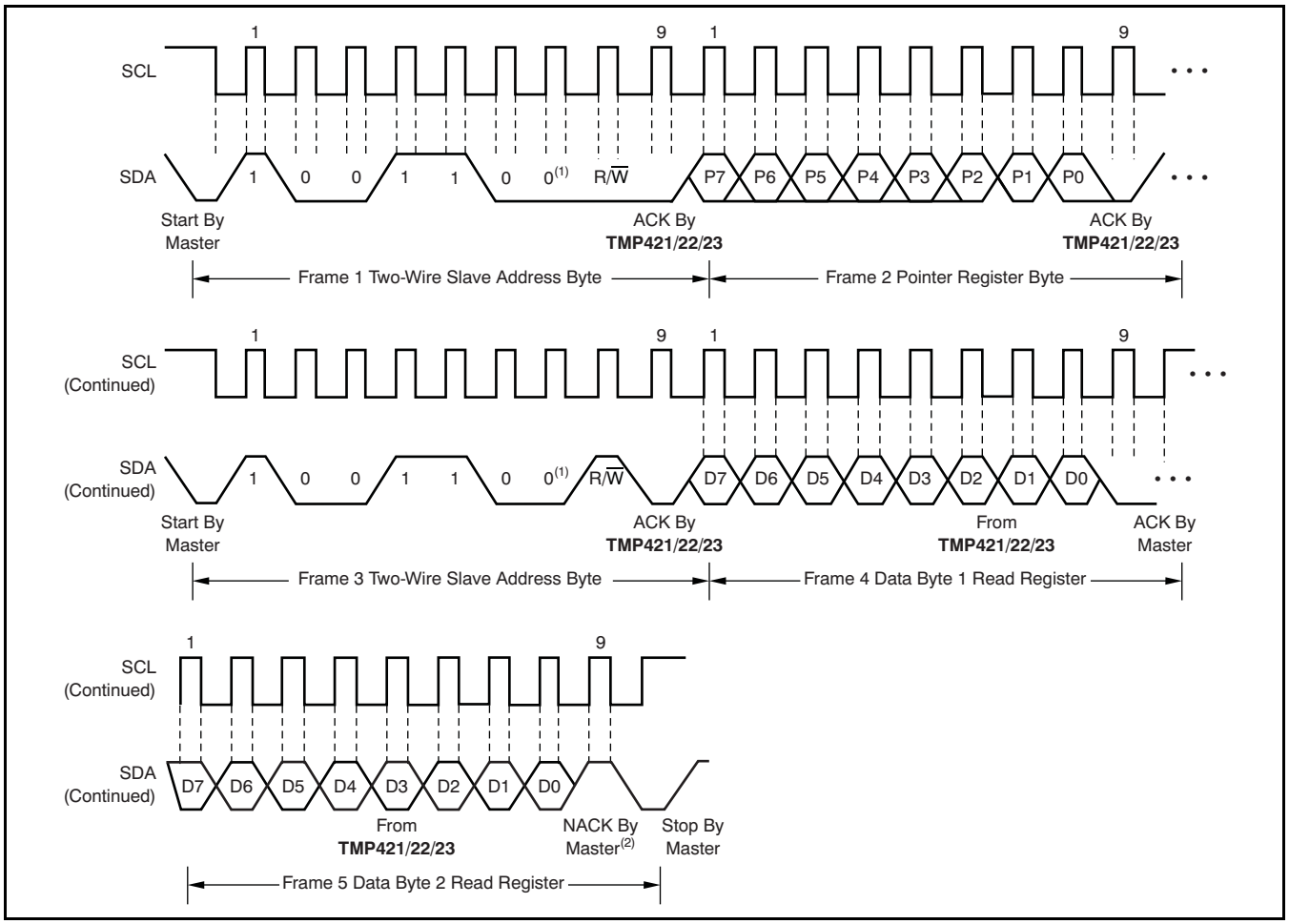

(1) Slave address 1001100 shown.

(2) Master should leave SDA high to terminate a two-byte read operation.

Figure 19. Two-Wire Timing Diagram for Two-Byte Read Format

HIGH-SPEED MODE

In order for the two-wire bus to operate at frequencies above 400kHz, the master device must issue a High-Speed mode (Hs-mode) master code (0000 1xxx) as the first byte after a START condition to switch the bus to high-speed operation. The TMP421/22/23 do not acknowledge this byte, but switch the input filters on SDA and SCL and the output filter on SDA to operate in Hs-mode, allowing transfers at up to 3.4MHz. After the Hs-mode master code has been issued, the master transmits a two-wire slave address to initiate a data transfer operation. The bus continues to operate in Hs-mode until a STOP condition occurs on the bus. Upon receiving the STOP condition, the TMP421/22/23 switch the input and output filters back to fast mode operation.

TIMEOUT FUNCTION

The TMP421/22/23 reset the serial interface if either SCL or SDA are held low for 30ms (typical) between a START and STOP condition. If the TMP421/22/23 are holding the bus low, the device releases the bus and waits for a START condition. To avoid activating the timeout function, it is necessary to maintain a communication speed of at least 1kHz for the SCL operating frequency.

Copyright © 2007–2012, Texas Instruments Incorporated

SHUTDOWN MODE (SD)

The TMP421/22/23 Shutdown Mode allows the user to save maximum power by shutting down all device circuitry other than the serial interface, reducing current consumption to typically less than 3μA; see Figure 10, *Shutdown Quiescent Current vs Supply Voltage*. Shutdown Mode is enabled when the SD bit (bit 6) of Configuration Register 1 is high; the device shuts down once the current conversion is completed. When SD is low, the device maintains a continuous conversion state.

SENSOR FAULT

The TMP421 can sense a fault at the DXP input resulting from incorrect diode connection. The TMP421/22/23 can all sense an open circuit. Short-circuit conditions return a value of –64°C. The detection circuitry consists of a voltage comparator that trips when the voltage at DXP exceeds (V+) – 0.6V (typical). The comparator output is continuously checked during a conversion. If a fault is detected, the OPEN bit (bit 0) in the temperature result register is set to '1' and the rest of the register bits should be ignored.

When not using the remote sensor with the TMP421, the DXP and DXN inputs must be connected together to prevent meaningless fault warnings. When not using a remote sensor with the TMP422, the DX pins should be connected (refer to Table 10) such that DXP connections are grounded and DXN connections are left open (unconnected). Unused TMP423 DXP pins can be left open or connected to GND.

UNDERVOLTAGE LOCKOUT

The TMP421/22/23 sense when the power-supply voltage has reached a minimum voltage level for the ADC to function. The detection circuitry consists of a voltage comparator that enables the ADC after the power supply (V+) exceeds 2.45V (typical). The comparator output is continuously checked during a conversion. The TMP421/22/23 do not perform a temperature conversion if the power supply is not valid. The $\overline{\text{PVLD}}$ bit (bit 1, see Table 3) of the individual Local/Remote Temperature Register is set to '1' and the temperature result may be incorrect.

FILTERING

Remote junction temperature sensors are usually implemented in a noisy environment. Noise is most often created by fast digital signals, and it can corrupt measurements. The TMP421/22/23 have a built-in 65kHz filter on the inputs of DXP and DXN (TMP421/TMP423), or on the inputs of DX1 through DX4 (TMP422), to minimize the effects of noise. However, a bypass capacitor placed differentially across the inputs of the remote temperature sensor is recommended to make the application more robust against unwanted coupled signals. The value of this capacitor should be between 100pF and 1nF. Some applications attain better overall accuracy with additional series resistance; however, this increased accuracy is *application-specific*. When series resistance is added, the total value should not be greater than 3kΩ. If filtering is needed, suggested component values are 100pF and 50Ω on each input; exact values are application-specific.

REMOTE SENSING

The TMP421/22/23 are designed to be used with either discrete transistors or substrate transistors built into processor chips and ASICs. Either NPN or PNP transistors can be used, as long as the base-emitter junction is used as the remote temperature sense. NPN transistors must be diode-connected. PNP transistors can either be transistor- or diode-connected (see Figure 11, Figure 12, and Figure 13).

Errors in remote temperature sensor readings are typically the consequence of the ideality factor and current excitation used by the TMP421/22/23 versus the manufacturer-specified operating current for a given transistor. Some manufacturers specify a high-level and low-level current for the temperature-sensing substrate transistors. The TMP421/22/23 use 6μA for I_{LOW} and 120μA for I_{HIGH}.

The ideality factor (η) is a measured characteristic of a remote temperature sensor diode as compared to an ideal diode. The TMP421/22/23 allow for different η-factor values; see the *N-Factor Correction Register* section.

The ideality factor for the TMP421/22/23 is trimmed to be 1.008. For transistors that have an ideality factor that does not match the TMP421/22/23, Equation 4 can be used to calculate the temperature error. Note that for the equation to be used correctly, actual temperature (°C) must be converted to kelvins (K).

$$T_{ERR} = \left(\frac{\eta - 1.008}{1.008}\right) \times (273.15 + T(°C)) \quad (4)$$

Where:

η = ideality factor of remote temperature sensor
T(°C) = actual temperature
T_{ERR} = error in TMP421/22/23 because η ≠ 1.008
Degree delta is the same for °C and K

For η = 1.004 and T(°C) = 100°C:

$$T_{ERR} = \left(\frac{1.004 - 1.008}{1.008}\right) \times (273.15 + 100^{\circ}C)$$

$$T_{ERR} = 1.48^{\circ}C \quad (5)$$

If a discrete transistor is used as the remote temperature sensor with the TMP421/22/23, the best accuracy can be achieved by selecting the transistor according to the following criteria:

1. Base-emitter voltage > 0.25V at 6μA, at the highest sensed temperature.
2. Base-emitter voltage < 0.95V at 120μA, at the lowest sensed temperature.
3. Base resistance < 100Ω.
4. Tight control of V_{BE} characteristics indicated by small variations in h_{FE} (that is, 50 to 150).

Based on these criteria, two recommended small-signal transistors are the 2N3904 (NPN) or 2N3906 (PNP).

MEASUREMENT ACCURACY AND THERMAL CONSIDERATIONS

The temperature measurement accuracy of the TMP421/22/23 depends on the remote and/or local temperature sensor being at the same temperature as the system point being monitored. Clearly, if the temperature sensor is not in good thermal contact with the part of the system being monitored, then there will be a delay in the response of the sensor to a temperature change in the system. For remote temperature-sensing applications using a substrate transistor (or a small, SOT23 transistor) placed close to the device being monitored, this delay is usually not a concern.

The local temperature sensor inside the TMP421/22/23 monitors the ambient air around the device. The thermal time constant for the TMP421/22/23 is approximately two seconds. This constant implies that if the ambient air changes quickly by 100°C, it would take the TMP421/22/23 about 10 seconds (that is, five thermal time constants) to settle to within 1°C of the final value. In most applications, the TMP421/22/23 package is in electrical, and therefore thermal, contact with the printed circuit board (PCB), as well as subjected to forced airflow. The accuracy of the measured temperature directly depends on how accurately the PCB and forced airflow temperatures represent the temperature that the TMP421/22/23 is measuring. Additionally, the internal power dissipation of the TMP421/22/23 can cause the temperature to rise above the ambient or PCB temperature. The internal power dissipated as a result of exciting the remote temperature sensor is negligible because of the small currents used. For a 5.5V supply and maximum conversion rate of eight conversions per second, the TMP421/22/23 dissipate 2.3mW (PD_{IQ} = 5.5V × 415μA). A θ_{JA} of 100°C/W (for SOT23 package) causes the junction temperature to rise approximately +0.23°C above the ambient.

LAYOUT CONSIDERATIONS

Remote temperature sensing on the TMP421/22/23 measures very small voltages using very low currents; therefore, noise at the IC inputs must be minimized. Most applications using the TMP421/22/23 will have high digital content, with several clocks and logic level transitions creating a noisy environment. Layout should adhere to the following guidelines:

1. Place the TMP421/22/23 as close to the remote junction sensor as possible.
2. Route the DXP and DXN traces next to each other and shield them from adjacent signals through the use of ground guard traces; see Figure 20. If a multilayer PCB is used, bury these traces between ground or V+ planes to shield them from extrinsic noise sources. 5 mil (0.127mm) PCB traces are recommended.
3. Minimize additional thermocouple junctions caused by copper-to-solder connections. If these junctions are used, make the same number and approximate locations of copper-to-solder connections in both the DXP and DXN connections to cancel any thermocouple effects.
4. Use a 0.1μF local bypass capacitor directly between the V+ and GND of the TMP421/22/23; see Figure 21. Minimize filter capacitance between DXP and DXN to 1000pF or less for optimum measurement performance. This capacitance includes any cable capacitance between the remote temperature sensor and the TMP421/22/23.
5. If the connection between the remote temperature sensor and the TMP421/22/23 is less than 8 in (20.32 cm) long, use a twisted-wire pair connection. Beyond 8 in, use a twisted, shielded pair with the shield grounded as close to the TMP421/22/23 as possible. Leave the remote sensor connection end of the shield wire open to avoid ground loops and 60Hz pickup.
6. Thoroughly clean and remove all flux residue in and around the pins of the TMP421/22/23 to avoid temperature offset readings as a result of leakage paths between DXP or DXN and GND, or between DXP or DXN and V+.

Copyright © 2007–2012, Texas Instruments Incorporated

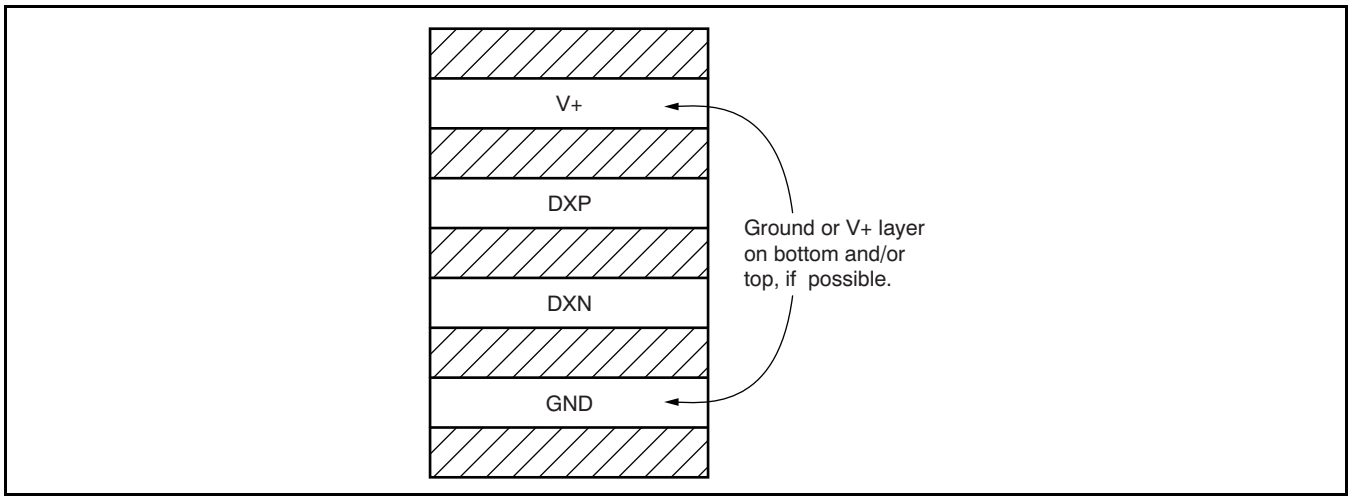

NOTE: Use minimum 5 mil (0.127mm) traces with 5 mil spacing.

Figure 20. Suggested PCB Layer Cross-Section

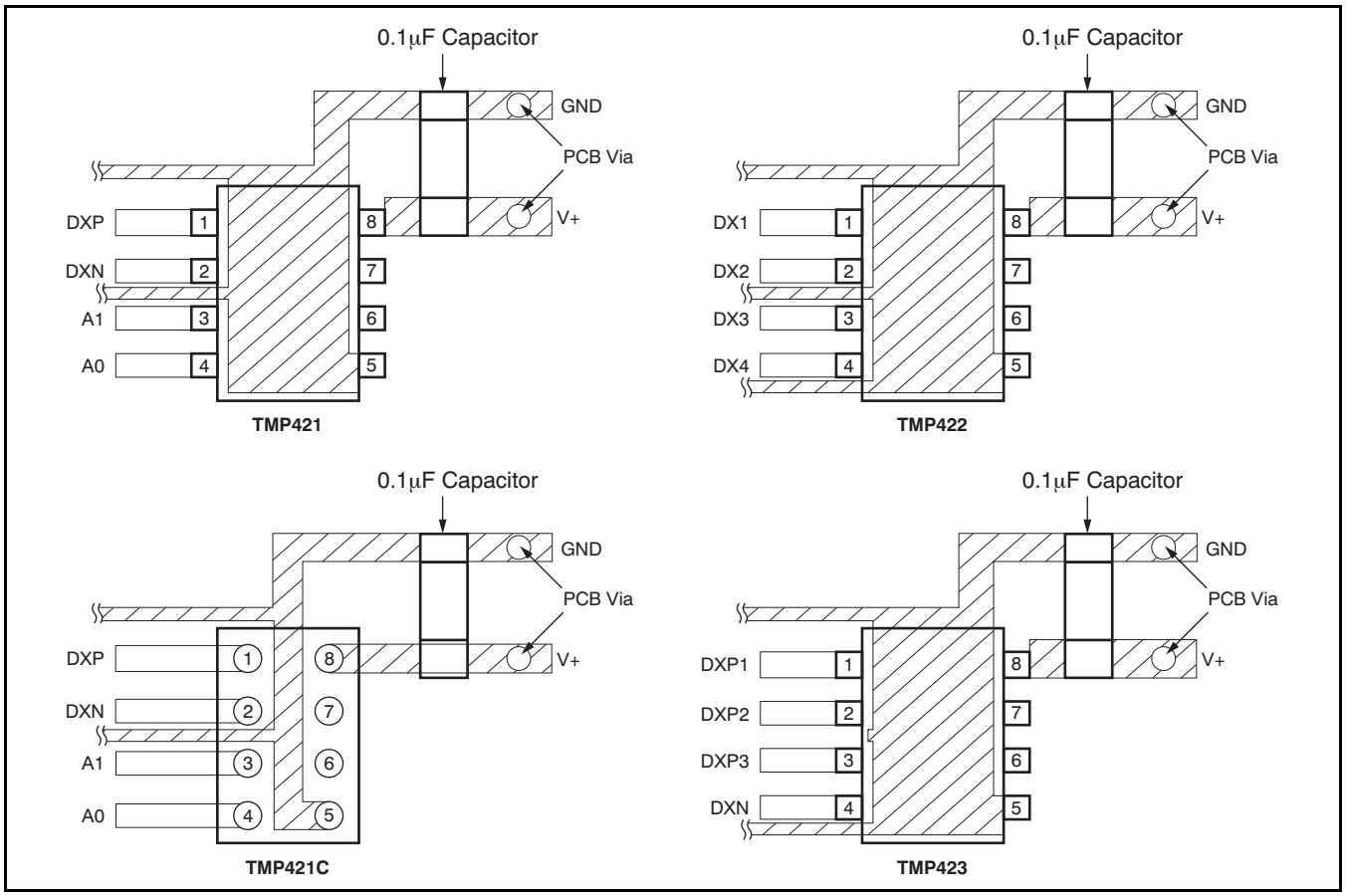

Figure 21. Suggested Bypass Capacitor Placement and Trace Shielding

REVISION HISTORY

NOTE: Page numbers for previous revisions may differ from page numbers in the current version.

Changes from Revision B (March 2008) to Revision C **Page**

- Removed package name from title 1
- Added new DSBGA package to feature bullet 1
- Added TMP421C device to *Description* section 1
- Added TMP421C device with DSBGA package to Package Information table 2
- Added new Electrical Characteristics table for TMP421C 4
- Changed V+ pin voltage range in all Pin Assignment tables from 2.7V to 2.55V 5
- Added DSBGA package to TMP421 *Pin Configuration* section 5
- Changed supply voltage minimum range for pin 8 from 2.55V to 2.7V in TMP422 Pin Assignments table 5
- Changed supply voltage minimum range for pin 8 from 2.55V to 2.7V in TMP423 Pin Assignments table 6
- Changed label from V_S to V+ and value from 2.7V to 2.55V in Figure 4 7
- Changed label from V_S to V+ and value from 2.7V to 2.55V in Figure 5 8
- Changed label from V_S to V+ and value from 2.7V to 2.55V in Figure 8 8
- Added new DSBGA package text to first paragraph of *Application Information* section 9
- Changed text in first paragraph of *Application Information* section 9
- Changed text in first paragraph of *Application Information* section to clarify temperature measurement channels 9
- Changed text in last paragraph of *Application Information* section 9
- Changed minimum temperature value for bit 2 = 0 from –55°C to –40°C in Table 5 14
- Changed header row for Table 6 15
- Changed V_S to V+ in Table 7 16
- Added "(for SOT23 package)" to end of *Measurement Accuracy and Thermal Considerations* section 24
- Changed V_{DD} to V+ in bullet 2 of *Layout Considerations* section 24
- Added TMP421C to Figure 21 25

Copyright © 2007–2012, Texas Instruments Incorporated

PACKAGING INFORMATION

Orderable Device	Status (1)	Package Type	Package Drawing	Pins	Package Qty	Eco Plan (2)	Lead finish/ Ball material (6)	MSL Peak Temp (3)	Op Temp (°C)	Device Marking (4/5)	Samples
TMP421AIDCNR	ACTIVE	SOT-23	DCN	8	3000	RoHS & Green	NIPDAU	Level-2-260C-1 YEAR	-40 to 125	DACI	Samples
TMP421AIDCNT	ACTIVE	SOT-23	DCN	8	250	RoHS & Green	NIPDAU	Level-2-260C-1 YEAR	-40 to 125	DACI	Samples
TMP421AIDCNTG4	ACTIVE	SOT-23	DCN	8	250	RoHS & Green	NIPDAU	Level-2-260C-1 YEAR	-40 to 125	DACI	Samples
TMP421YZDR	ACTIVE	DSBGA	YZD	8	3000	RoHS & Green	SNAGCU	Level-1-260C-UNLIM	-40 to 125	TMP421	Samples
TMP421YZDT	ACTIVE	DSBGA	YZD	8	250	RoHS & Green	SNAGCU	Level-1-260C-UNLIM	-40 to 125	TMP421	Samples
TMP422AIDCNR	ACTIVE	SOT-23	DCN	8	3000	RoHS & Green	NIPDAU	Level-2-260C-1 YEAR	-40 to 125	DADI	Samples
TMP422AIDCNRG4	ACTIVE	SOT-23	DCN	8	3000	RoHS & Green	NIPDAU	Level-2-260C-1 YEAR	-40 to 125	DADI	Samples
TMP422AIDCNT	ACTIVE	SOT-23	DCN	8	250	RoHS & Green	NIPDAU	Level-2-260C-1 YEAR	-40 to 125	DADI	Samples
TMP422AIDCNTG4	ACTIVE	SOT-23	DCN	8	250	RoHS & Green	NIPDAU	Level-2-260C-1 YEAR	-40 to 125	DADI	Samples
TMP423AIDCNR	ACTIVE	SOT-23	DCN	8	3000	RoHS & Green	NIPDAU	Level-2-260C-1 YEAR	-40 to 125	DAEI	Samples
TMP423AIDCNRG4	ACTIVE	SOT-23	DCN	8	3000	RoHS & Green	NIPDAU	Level-2-260C-1 YEAR	-40 to 125	DAEI	Samples
TMP423AIDCNT	ACTIVE	SOT-23	DCN	8	250	RoHS & Green	NIPDAU	Level-2-260C-1 YEAR	-40 to 125	DAEI	Samples
TMP423AIDCNTG4	ACTIVE	SOT-23	DCN	8	250	RoHS & Green	NIPDAU	Level-2-260C-1 YEAR	-40 to 125	DAEI	Samples
TMP423BIDCNR	ACTIVE	SOT-23	DCN	8	3000	RoHS & Green	NIPDAU	Level-2-260C-1 YEAR	-40 to 125	DAFI	Samples
TMP423BIDCNRG4	ACTIVE	SOT-23	DCN	8	3000	RoHS & Green	NIPDAU	Level-2-260C-1 YEAR	-40 to 125	DAFI	Samples
TMP423BIDCNT	ACTIVE	SOT-23	DCN	8	250	RoHS & Green	NIPDAU	Level-2-260C-1 YEAR	-40 to 125	DAFI	Samples

(1) The marketing status values are defined as follows:
ACTIVE: Product device recommended for new designs.
LIFEBUY: TI has announced that the device will be discontinued, and a lifetime-buy period is in effect.
NRND: Not recommended for new designs. Device is in production to support existing customers, but TI does not recommend using this part in a new design.
PREVIEW: Device has been announced but is not in production. Samples may or may not be available.
OBSOLETE: TI has discontinued the production of the device.

(2) **RoHS:** TI defines "RoHS" to mean semiconductor products that are compliant with the current EU RoHS requirements for all 10 RoHS substances, including the requirement that RoHS substance do not exceed 0.1% by weight in homogeneous materials. Where designed to be soldered at high temperatures, "RoHS" products are suitable for use in specified lead-free processes. TI may reference these types of products as "Pb-Free".
RoHS Exempt: TI defines "RoHS Exempt" to mean products that contain lead but are compliant with EU RoHS pursuant to a specific EU RoHS exemption.
Green: TI defines "Green" to mean the content of Chlorine (Cl) and Bromine (Br) based flame retardants meet JS709B low halogen requirements of <=1000ppm threshold. Antimony trioxide based flame retardants must also meet the <=1000ppm threshold requirement.

(3) MSL, Peak Temp. - The Moisture Sensitivity Level rating according to the JEDEC industry standard classifications, and peak solder temperature.

(4) There may be additional marking, which relates to the logo, the lot trace code information, or the environmental category on the device.

(5) Multiple Device Markings will be inside parentheses. Only one Device Marking contained in parentheses and separated by a "~" will appear on a device. If a line is indented then it is a continuation of the previous line and the two combined represent the entire Device Marking for that device.

(6) Lead finish/Ball material - Orderable Devices may have multiple material finish options. Finish options are separated by a vertical ruled line. Lead finish/Ball material values may wrap to two lines if the finish value exceeds the maximum column width.

Important Information and Disclaimer: The information provided on this page represents TI's knowledge and belief as of the date that it is provided. TI bases its knowledge and belief on information provided by third parties, and makes no representation or warranty as to the accuracy of such information. Efforts are underway to better integrate information from third parties. TI has taken and continues to take reasonable steps to provide representative and accurate information but may not have conducted destructive testing or chemical analysis on incoming materials and chemicals. TI and TI suppliers consider certain information to be proprietary, and thus CAS numbers and other limited information may not be available for release.

In no event shall TI's liability arising out of such information exceed the total purchase price of the TI part(s) at issue in this document sold by TI to Customer on an annual basis.

OTHER QUALIFIED VERSIONS OF TMP421, TMP422, TMP423 :

- Automotive: TMP421-Q1, TMP422-Q1, TMP423-Q1
- Enhanced Product: TMP422-EP

NOTE: Qualified Version Definitions:

- Automotive - Q100 devices qualified for high-reliability automotive applications targeting zero defects
- Enhanced Product - Supports Defense, Aerospace and Medical Applications

TAPE AND REEL INFORMATION

REEL DIMENSIONS

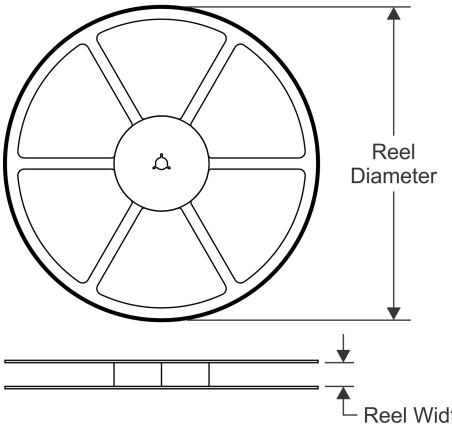

TAPE DIMENSIONS

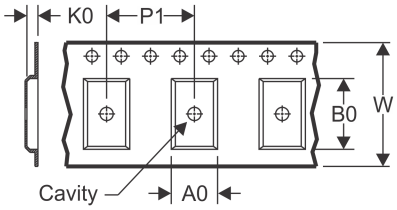

A0	Dimension designed to accommodate the component width
B0	Dimension designed to accommodate the component length
K0	Dimension designed to accommodate the component thickness
W	Overall width of the carrier tape
P1	Pitch between successive cavity centers

QUADRANT ASSIGNMENTS FOR PIN 1 ORIENTATION IN TAPE

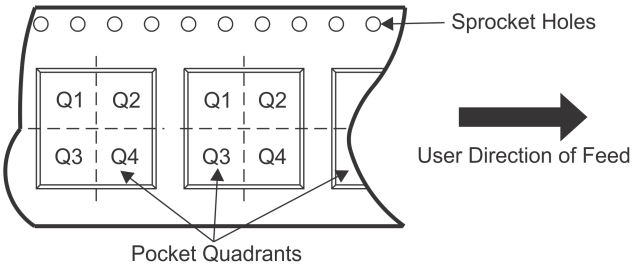

*All dimensions are nominal

Device	Package Type	Package Drawing	Pins	SPQ	Reel Diameter (mm)	Reel Width W1 (mm)	A0 (mm)	B0 (mm)	K0 (mm)	P1 (mm)	W (mm)	Pin1 Quadrant
TMP421AIDCNR	SOT-23	DCN	8	3000	179.0	8.4	3.2	3.2	1.4	4.0	8.0	Q3
TMP421AIDCNT	SOT-23	DCN	8	250	179.0	8.4	3.2	3.2	1.4	4.0	8.0	Q3
TMP421YZDR	DSBGA	YZD	8	3000	180.0	8.4	1.1	2.29	0.69	2.0	8.0	Q1
TMP421YZDT	DSBGA	YZD	8	250	180.0	8.4	1.1	2.29	0.69	2.0	8.0	Q1
TMP422AIDCNR	SOT-23	DCN	8	3000	179.0	8.4	3.2	3.2	1.4	4.0	8.0	Q3
TMP422AIDCNT	SOT-23	DCN	8	250	179.0	8.4	3.2	3.2	1.4	4.0	8.0	Q3
TMP423AIDCNR	SOT-23	DCN	8	3000	179.0	8.4	3.2	3.2	1.4	4.0	8.0	Q3
TMP423AIDCNT	SOT-23	DCN	8	250	179.0	8.4	3.2	3.2	1.4	4.0	8.0	Q3
TMP423BIDCNR	SOT-23	DCN	8	3000	179.0	8.4	3.2	3.2	1.4	4.0	8.0	Q3
TMP423BIDCNT	SOT-23	DCN	8	250	179.0	8.4	3.2	3.2	1.4	4.0	8.0	Q3

TAPE AND REEL BOX DIMENSIONS

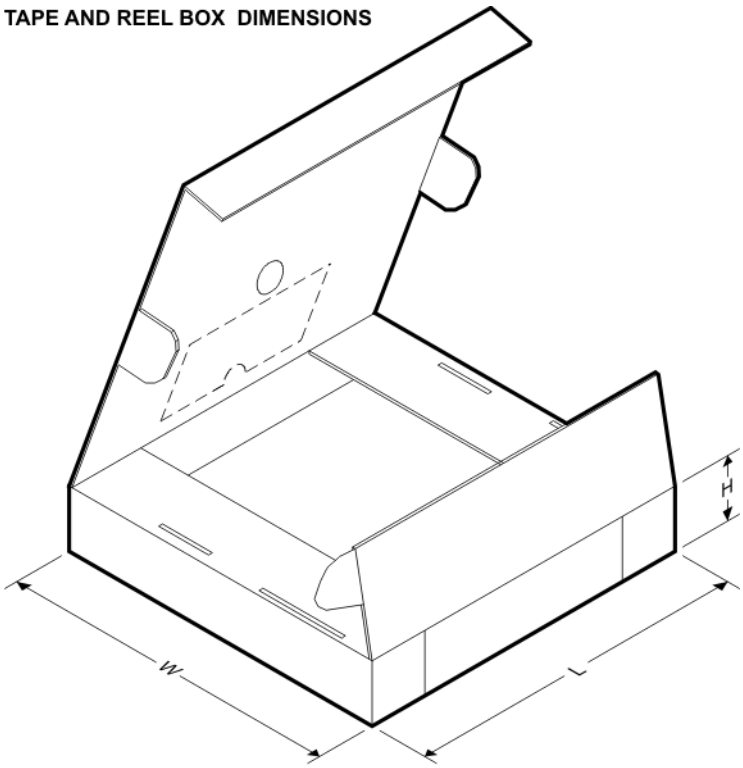

*All dimensions are nominal

Device	Package Type	Package Drawing	Pins	SPQ	Length (mm)	Width (mm)	Height (mm)
TMP421AIDCNR	SOT-23	DCN	8	3000	213.0	191.0	35.0
TMP421AIDCNT	SOT-23	DCN	8	250	213.0	191.0	35.0
TMP421YZDR	DSBGA	YZD	8	3000	182.0	182.0	20.0
TMP421YZDT	DSBGA	YZD	8	250	182.0	182.0	20.0
TMP422AIDCNR	SOT-23	DCN	8	3000	213.0	191.0	35.0
TMP422AIDCNT	SOT-23	DCN	8	250	213.0	191.0	35.0
TMP423AIDCNR	SOT-23	DCN	8	3000	213.0	191.0	35.0
TMP423AIDCNT	SOT-23	DCN	8	250	213.0	191.0	35.0
TMP423BIDCNR	SOT-23	DCN	8	3000	213.0	191.0	35.0
TMP423BIDCNT	SOT-23	DCN	8	250	213.0	191.0	35.0

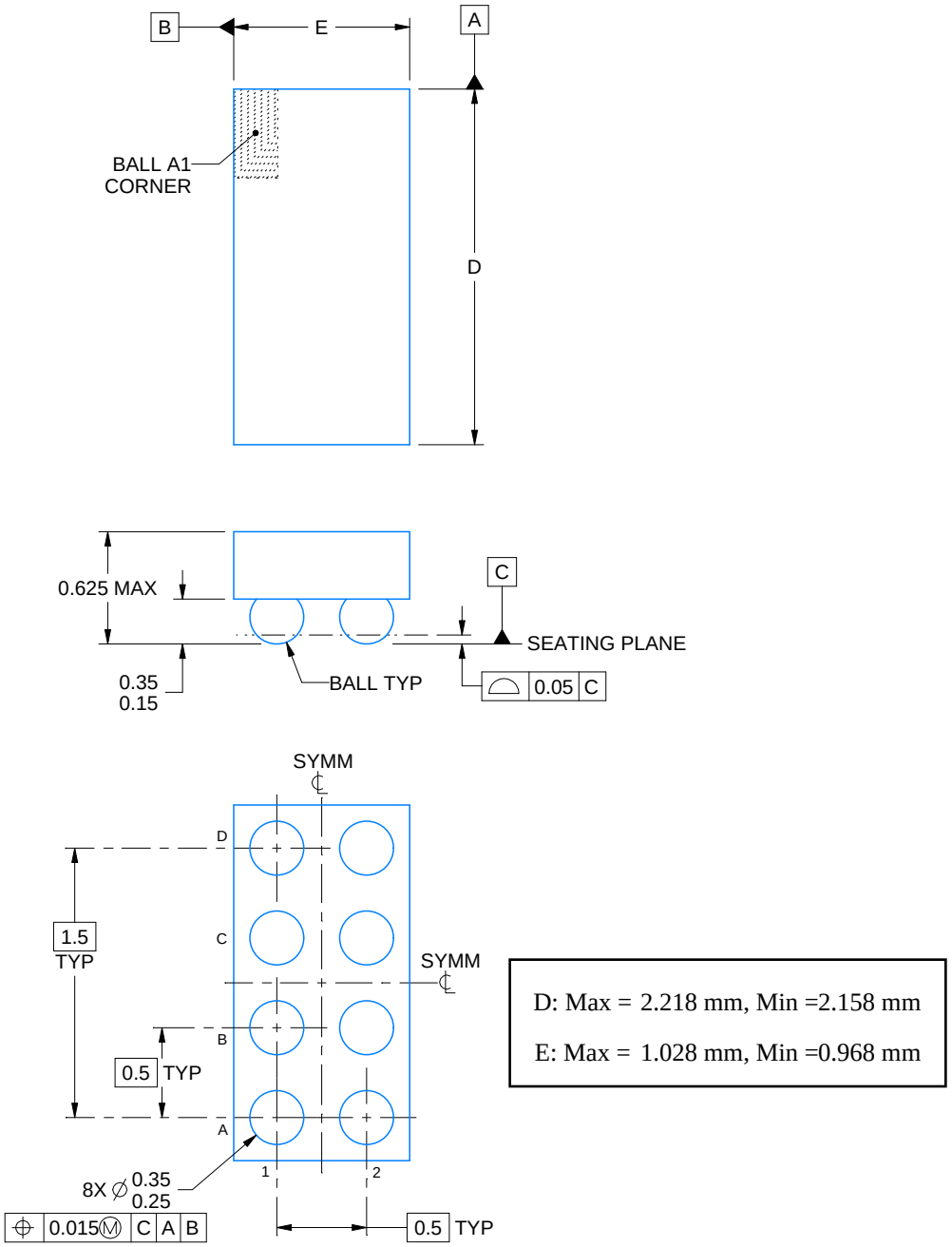

NOTES:

1. All linear dimensions are in millimeters. Any dimensions in parenthesis are for reference only. Dimensioning and tolerancing per ASME Y14.5M.
2. This drawing is subject to change without notice.

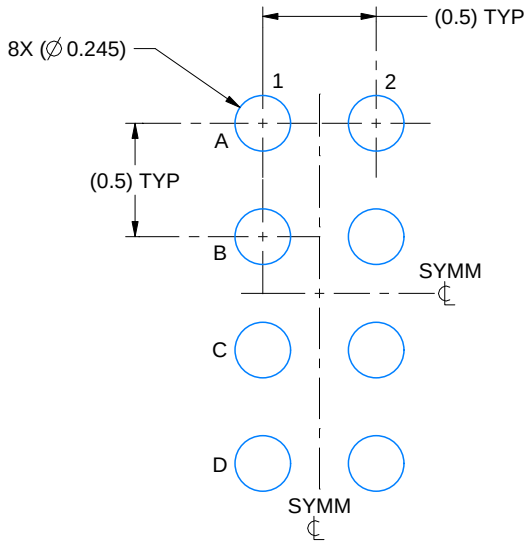

LAND PATTERN EXAMPLE
EXPOSED METAL SHOWN
SCALE: 30X

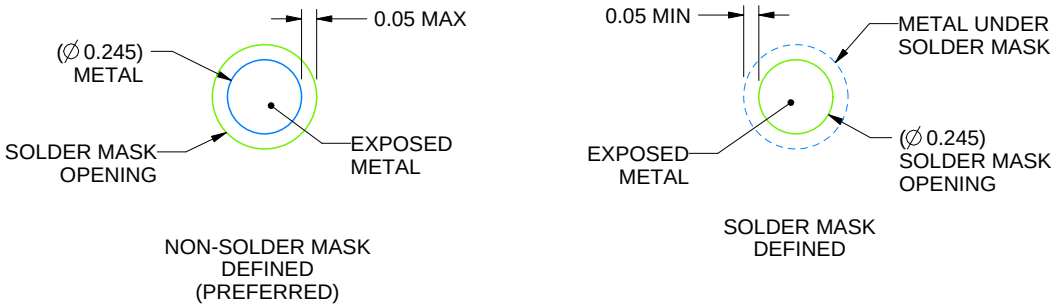

SOLDER MASK DETAILS
NOT TO SCALE

4219545/A 12/2018

NOTES: (continued)

3. Final dimensions may vary due to manufacturing tolerance considerations and also routing constraints.
   See Texas Instruments Literature No. SNVA009 (www.ti.com/lit/snva009).

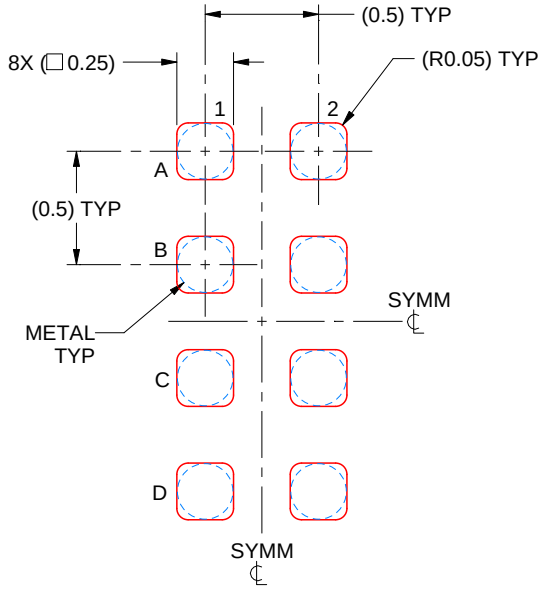

SOLDER PASTE EXAMPLE
BASED ON 0.1 mm THICK STENCIL
SCALE: 30X

4219545/A 12/2018

NOTES: (continued)

4. Laser cutting apertures with trapezoidal walls and rounded corners may offer better paste release.

DCN (R–PDSO–G8) PLASTIC SMALL–OUTLINE PACKAGE (DIE DOWN)

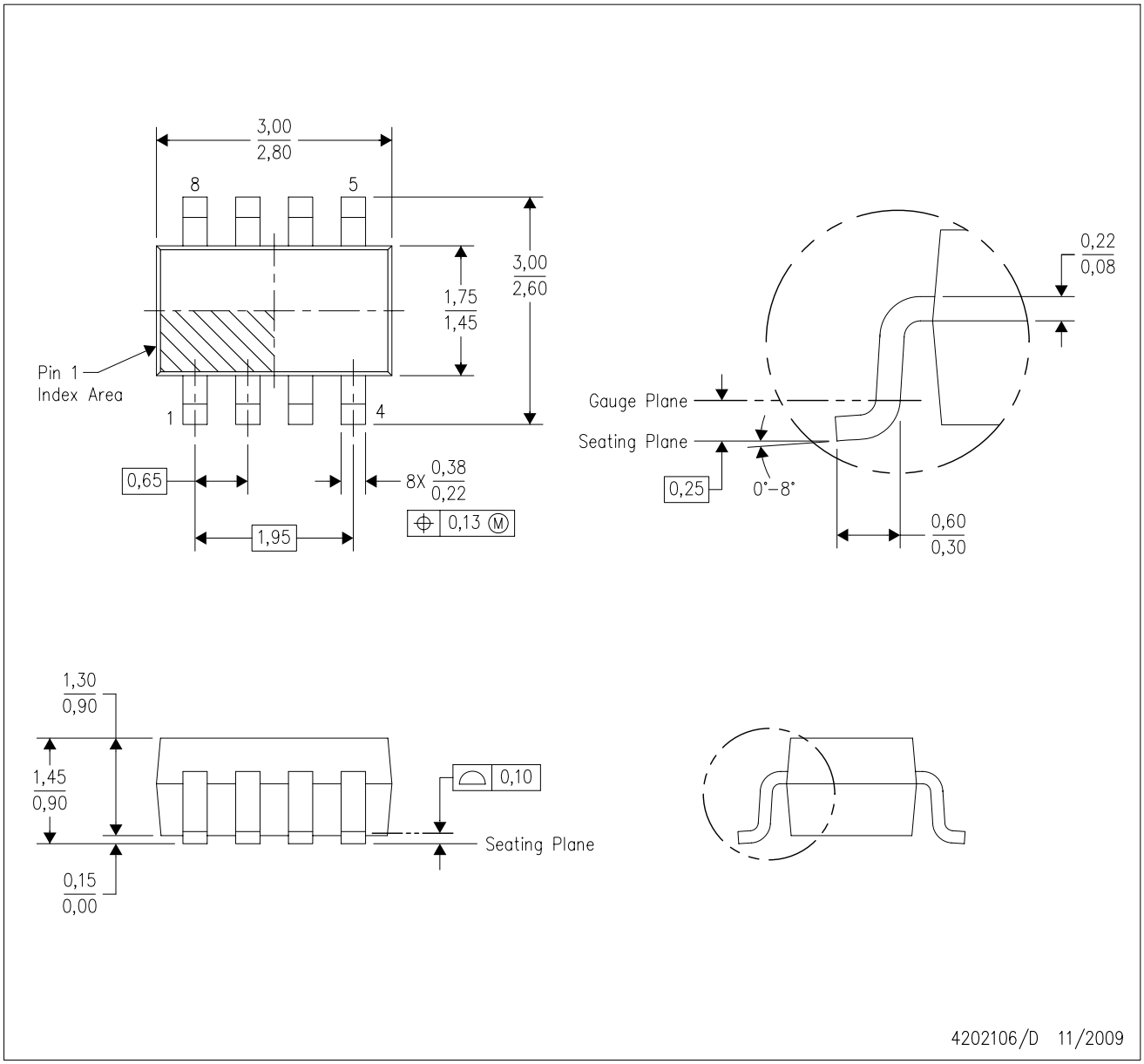

NOTES:
A. All linear dimensions are in millimeters.
B. This drawing is subject to change without notice.
C. Package outline exclusive of metal burr & dambar protrusion/intrusion.
D. Package outline inclusive of solder plating.
E. A visual index feature must be located within the Pin 1 index area.
F. Falls within JEDEC MO–178 Variation BA.
G. Body dimensions do not include flash or protrusion. Mold flash and protrusion shall not exceed 0.25 per side.

DCN (R-PDSO-G8) PLASTIC SMALL-OUTLINE PACKAGE (DIE DOWN)

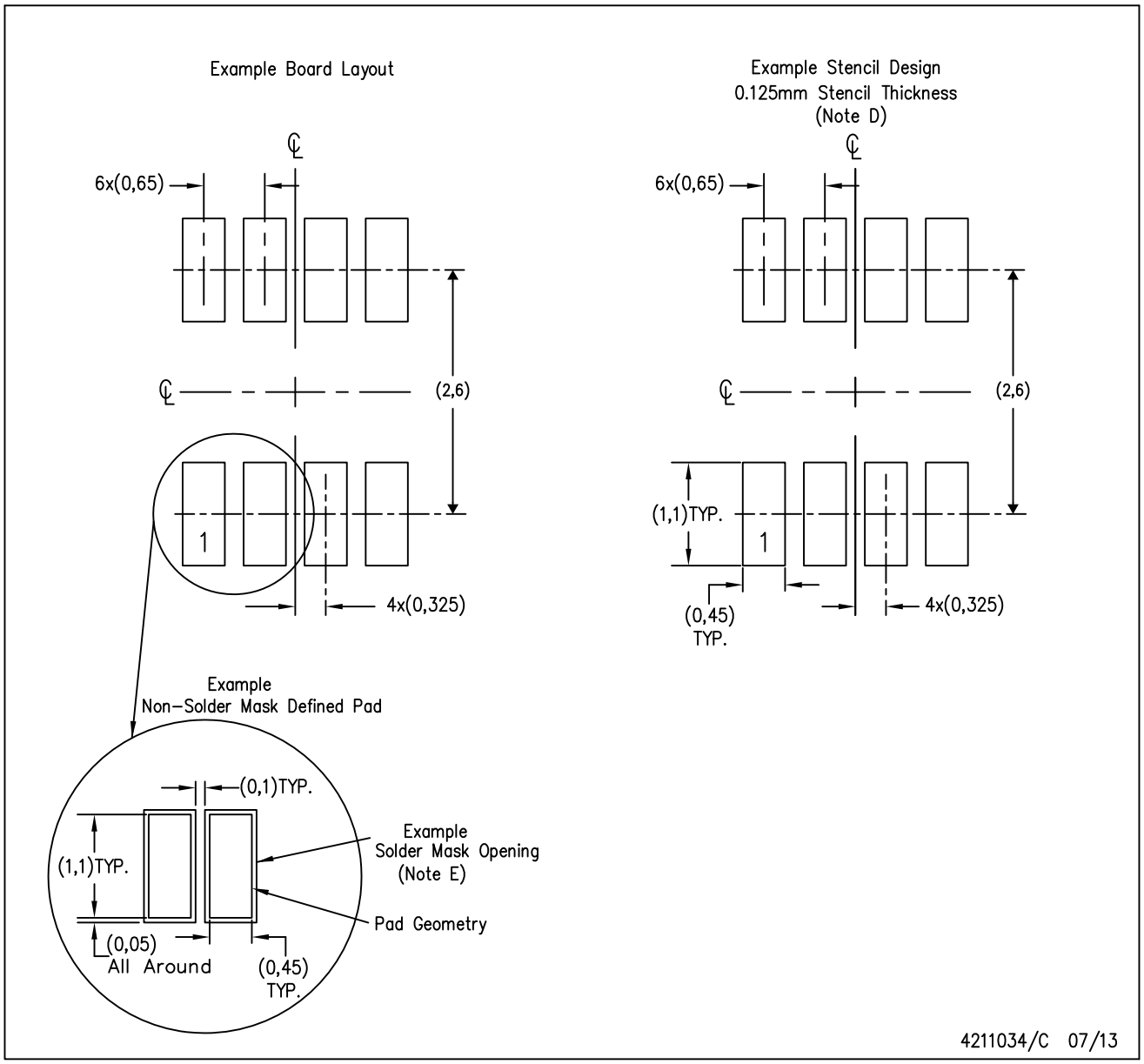

NOTES:
A. All linear dimensions are in millimeters.
B. This drawing is subject to change without notice.
C. Publication IPC-7351 is recommended for alternate designs.
D. Laser cutting apertures with trapezoidal walls and also rounding corners will offer better paste release. Customers should contact their board assembly site for stencil design recommendations. Refer to IPC-7525.
E. Customers should contact their board fabrication site for solder mask tolerances between and around signal pads.

IMPORTANT NOTICE AND DISCLAIMER

TI PROVIDES TECHNICAL AND RELIABILITY DATA (INCLUDING DATASHEETS), DESIGN RESOURCES (INCLUDING REFERENCE DESIGNS), APPLICATION OR OTHER DESIGN ADVICE, WEB TOOLS, SAFETY INFORMATION, AND OTHER RESOURCES “AS IS” AND WITH ALL FAULTS, AND DISCLAIMS ALL WARRANTIES, EXPRESS AND IMPLIED, INCLUDING WITHOUT LIMITATION ANY IMPLIED WARRANTIES OF MERCHANTABILITY, FITNESS FOR A PARTICULAR PURPOSE OR NON-INFRINGEMENT OF THIRD PARTY INTELLECTUAL PROPERTY RIGHTS.

These resources are intended for skilled developers designing with TI products. You are solely responsible for (1) selecting the appropriate TI products for your application, (2) designing, validating and testing your application, and (3) ensuring your application meets applicable standards, and any other safety, security, or other requirements. These resources are subject to change without notice. TI grants you permission to use these resources only for development of an application that uses the TI products described in the resource. Other reproduction and display of these resources is prohibited. No license is granted to any other TI intellectual property right or to any third party intellectual property right. TI disclaims responsibility for, and you will fully indemnify TI and its representatives against, any claims, damages, costs, losses, and liabilities arising out of your use of these resources.

TI’s products are provided subject to TI’s Terms of Sale (https:www.ti.com/legal/termsofsale.html) or other applicable terms available either on ti.com or provided in conjunction with such TI products. TI’s provision of these resources does not expand or otherwise alter TI’s applicable warranties or warranty disclaimers for TI products.

Mailing Address: Texas Instruments, Post Office Box 655303, Dallas, Texas 75265
Copyright © 2021, Texas Instruments Incorporated