TMS320DM6467
Digital Media System-on-Chip

Check for Samples: TMS320DM6467

1 Digital Media System-on-Chip (DMSoC)

1.1 Features

- High-Performance Digital Media SoC
  - 594-, 729-MHz C64x+™ Clock Rate
  - 297-, 364.5-MHz ARM926EJ-S™ Clock Rate
  - Eight 32-Bit C64x+ Instructions/Cycle
  - 4752, 5832 C64x+ MIPS
  - Fully Software-Compatible With C64x/ARM9™
  - Supports SmartReflex™ [-594 *only*]
    - Class 0
    - 1.05-V and 1.2-V Adaptive Core Voltage
  - Extended Temp Available [-594 *only*]
  - Industrial Temp Available [-729 *only*]
- Advanced Very-Long-Instruction-Word (VLIW) TMS320C64x+™ DSP Core
  - Eight Highly Independent Functional Units
    - Six ALUs (32-/40-Bit), Each Supports Single 32-Bit, Dual 16-Bit, or Quad 8-Bit Arithmetic per Clock Cycle
    - Two Multipliers Support Four 16 x 16-Bit Multiplies (32-Bit Results) per Clock Cycle or Eight 8 x 8-Bit Multiplies (16-Bit Results) per Clock Cycle
  - Load-Store Architecture With Non-Aligned Support
  - 64 32-Bit General-Purpose Registers
  - Instruction Packing Reduces Code Size
  - All Instructions Conditional
  - Additional C64x+™ Enhancements
    - Protected Mode Operation
    - Exceptions Support for Error Detection and Program Redirection
    - Hardware Support for Modulo Loop Operation
- C64x+ Instruction Set Features
  - Byte-Addressable (8-/16-/32-/64-Bit Data)
  - 8-Bit Overflow Protection
  - Bit-Field Extract, Set, Clear
  - Normalization, Saturation, Bit-Counting
  - Compact 16-Bit Instructions
  - Additional Instructions to Support Complex Multiplies
- C64x+ L1/L2 Memory Architecture
  - 32K-Byte L1P Program RAM/Cache (Direct Mapped)
  - 32K-Byte L1D Data RAM/Cache (2-Way Set-Associative)
  - 128K-Byte L2 Unified Mapped RAM/Cache (Flexible RAM/Cache Allocation)
- ARM926EJ-S Core
  - Support for 32-Bit and 16-Bit (Thumb® Mode) Instruction Sets
  - DSP Instruction Extensions and Single Cycle MAC
  - ARM® Jazelle® Technology
  - EmbeddedICE-RT™ Logic for Real-Time Debug
- ARM9 Memory Architecture
  - 16K-Byte Instruction Cache
  - 8K-Byte Data Cache
  - 32K-Byte RAM
  - 8K-Byte ROM
- Embedded Trace Buffer™ (ETB11™) With 4KB Memory for ARM9 Debug
- Endianness: Little Endian for ARM and DSP
- Dual Programmable High-Definition Video Image Co-Processor (HDVICP) Engines
  - Supports a Range of Encode, Decode, and Transcode Operations
    - H.264, MPEG2, VC1, MPEG4 SP/ASP
- 99-/108-MHz Video Port Interface (VPIF)
  - Two 8-Bit SD (BT.656), Single 16-Bit HD (BT.1120), or Single Raw (8-/10-/12-Bit) Video Capture Channels
  - Two 8-Bit SD (BT.656) or Single 16-Bit HD (BT.1120) Video Display Channels
- Video Data Conversion Engine (VDCE)
  - Horizontal and Vertical Downscaling
  - Chroma Conversion (4:2:2↔4:2:0)
- Two Transport Stream Interface (TSIF) Modules (One Parallel/Serial and One Serial Only)
  - TSIF for MPEG Transport Stream
  - Simultaneous Synchronous or Asynchronous Input/Output Streams

Please be aware that an important notice concerning availability, standard warranty, and use in critical applications of Texas Instruments semiconductor products and disclaimers thereto appears at the end of this data sheet.
All trademarks are the property of their respective owners.

PRODUCTION DATA information is current as of publication date. Products conform to specifications per the terms of the Texas Instruments standard warranty. Production processing does not necessarily include testing of all parameters.

Copyright © 2007–2012, Texas Instruments Incorporated

  - Absolute Time Stamp Detection
  - PID Filter With 7 PID Filter Tables
  - Corresponding Clock Reference Generator (CRGEN) Modules for System Time-Clock Recovery
- External Memory Interfaces (EMIFs)
  - 297-/310.5-MHz 32-Bit DDR2 SDRAM Memory Controller With 512M-Byte Address Space (1.8-V I/O)
  - Asynchronous16-Bit-Wide EMIF (EMIFA) With 128M-Byte Address Reach
    - Flash Memory Interfaces
      - NOR (8-/16-Bit-Wide Data)
      - NAND (8-/16-Bit-Wide Data)
- Enhanced Direct-Memory-Access (EDMA) Controller (64 Independent Channels)
  - Programmable Default Burst Size
- 10/100/1000 Mb/s Ethernet MAC (EMAC)
  - IEEE 802.3 Compliant (3.3-V I/O Only)
  - Supports MII and GMII Media Independent Interfaces
  - Management Data I/O (MDIO) Module
- USB Port With Integrated 2.0 PHY
  - USB 2.0 High-/Full-Speed Client
  - USB 2.0 High-/Full-/Low-Speed Host (Mini-Host, Supporting One External Device)
- 32-Bit, 33-MHz, 3.3-V Peripheral Component Interconnect (PCI) Master/Slave Interface
  - Conforms to PCI Specification 2.3
- Two 64-Bit General-Purpose Timers (Each Configurable as Two 32-Bit Timers)
- One 64-Bit Watchdog Timer
- Three Configurable UART/IrDA/CIR Modules (One With Modem Control Signals)
  - Supports up to 1.8432 Mbps UART
  - SIR and MIR (0.576 MBAUD)
  - CIR With Programmable Data Encoding
- One Serial Peripheral Interface (SPI) With Two Chip-Selects
- Master/Slave Inter-Integrated Circuit (I^2C Bus™)
- Two Multichannel Audio Serial Ports (McASPs)
  - One Four-Serializer Transmit/Receive Port
  - One Single DIT Transmit Port for S/PDIF
- 32-Bit Host Port Interface (HPI)
- VLYNQ™ Interface (FPGA Interface)
- Two Pulse Width Modulator (PWM) Outputs
- ATA/ATAPI I/F (ATA/ATAPI-6 Specification)
- Up to 33 General-Purpose I/O (GPIO) Pins (Multiplexed With Other Device Functions)
- On-Chip ARM ROM Bootloader (RBL)
- Individual Power-Saving Modes for ARM/DSP
- Flexible PLL Clock Generators
- IEEE-1149.1 (JTAG) Boundary-Scan-Compatible
- 529-Pin Pb-Free BGA Package (CUT Suffix), 0.8-mm Ball Pitch
- 0.09-µm/7-Level Cu Metal Process (CMOS)
- 3.3-V and 1.8-V I/O, 1.2-/1.05-V Internal
- Applications:
  - Video Encode/Decode/Transcode/Transrate
  - Digital Media
  - Networked Media Encode/Decode
  - Video Imaging
  - Video Infrastructure
  - Video Conferencing

Copyright © 2007–2012, Texas Instruments Incorporated

1.2 Description

The TMS320DM6467 (also referenced as DM6467) leverages TI's DaVinci™ technology to meet the networked media encode and decode digital media processing needs of next-generation embedded devices.

The DM6467 enables OEMs and ODMs to quickly bring to market devices featuring robust operating systems support, rich user interfaces, high processing performance, and long battery life through the maximum flexibility of a fully integrated mixed processor solution.

The dual-core architecture of the DM6467 provides benefits of both DSP and Reduced Instruction Set Computer (RISC) technologies, incorporating a high-performance TMS320C64x+ DSP core and an ARM926EJ-S core.

The ARM926EJ-S is a 32-bit RISC processor core that performs 32-bit or 16-bit instructions and processes 32-bit, 16-bit, or 8-bit data. The core uses pipelining so that all parts of the processor and memory system can operate continuously.

The ARM core incorporates:

- A coprocessor 15 (CP15) and protection module
- Data and program Memory Management Units (MMUs) with table look-aside buffers.
- Separate 16K-byte instruction and 8K-byte data caches. Both are four-way associative with virtual index virtual tag (VIVT).

The TMS320C64x+™ DSPs are the highest-performance fixed-point DSP generation in the TMS320C6000™ DSP platform. It is based on an enhanced version of the second-generation high-performance, advanced very-long-instruction-word (VLIW) architecture developed by Texas Instruments (TI), making these DSP cores an excellent choice for digital media applications. The C64x is a code-compatible member of the C6000™ DSP platform. The TMS320C64x+ DSP is an enhancement of the C64x+ DSP with added functionality and an expanded instruction set.

Any reference to the C64x DSP or C64x CPU also applies, unless otherwise noted, to the C64x+ DSP and C64x+ CPU, respectively.

With performance of up to 5832 million instructions per second (MIPS) at a clock rate of 729 MHz, the C64x+ core offers solutions to high-performance DSP programming challenges. The DSP core possesses the operational flexibility of high-speed controllers and the numerical capability of array processors. The C64x+ DSP core processor has 64 general-purpose registers of 32-bit word length and eight highly independent functional units—two multipliers for a 32-bit result and six arithmetic logic units (ALUs). The eight functional units include instructions to accelerate the performance in video and imaging applications. The DSP core can produce four 16-bit multiply-accumulates (MACs) per cycle for a total of 2376 million MACs per second (MMACS), or eight 8-bit MACs per cycle for a total of 4752 MMACS. For more details on the C64x+ DSP, see the *TMS320C64x/C64x+ DSP CPU and Instruction Set Reference Guide* (literature number SPRU732).

The DM6467 also has application-specific hardware logic, on-chip memory, and additional on-chip peripherals similar to the other C6000 DSP platform devices. The DM6467 core uses a two-level cache-based architecture. The Level 1 program cache (L1P) is a 256K-bit direct mapped cache and the Level 1 data cache (L1D) is a 640K-bit 2-way set-associative cache. The Level 2 memory/cache (L2) consists of an 512K-bit memory space that is shared between program and data space. L2 memory can be configured as mapped memory, cache, or combinations of the two.

The peripheral set includes: a configurable video port; a 10/100/1000 Mb/s Ethernet MAC (EMAC) with a Management Data Input/Output (MDIO) module; a 4-bit transfer/4-bit receive VLYNQ interface; an inter-integrated circuit (I2C) Bus interface; a multichannel audio serial port (McASP0) with 4 serializers; a secondary multichannel audio serial port (McASP1) with a single transmit serializer; 2 64-bit general-purpose timers each configurable as 2 independent 32-bit timers; 1 64-bit watchdog timer; a configurable 32-bit host port interface (HPI); up to 33-pins of general-purpose input/output (GPIO) with programmable

Copyright © 2007–2012, Texas Instruments Incorporated

interrupt/event generation modes, multiplexed with other peripherals; 3 UART/IrDA/CIR interfaces with modem interface signals on UART0; 2 pulse width modulator (PWM) peripherals; an ATA/ATAPI-6 interface; a 33-MHz peripheral component interface (PCI); and 2 external memory interfaces: an asynchronous external memory interface (EMIFA) for slower memories/peripherals, and a higher speed synchronous memory interface for DDR2.

The Ethernet Media Access Controller (EMAC) provides an efficient interface between the DM6467 and the network. The DM6467 EMAC support both 10Base-T and 100Base-TX, or 10 Mbits/second (Mbps) and 100 Mbps in either half- or full-duplex mode; and 1000Base-TX (1 Gbps) in full-duplex mode with hardware flow control and quality of service (QOS) support.

The Management Data Input/Output (MDIO) module continuously polls all 32 MDIO addresses in order to enumerate all PHY devices in the system. Once a PHY candidate has been selected by the ARM, the MDIO module transparently monitors its link state by reading the PHY status register. Link change events are stored in the MDIO module and can optionally interrupt the ARM, allowing the ARM to poll the link status of the device without continuously performing costly MDIO accesses.

The PCI, HPI, I2C, SPI, USB2.0, and VLYNQ ports allow the DM6467 to easily control peripheral devices and/or communicate with host processors.

The DM6467 also includes a High-Definition Video/Imaging Co-processor (HDVICP) and Video Data Conversion Engine (VDCE) to offload many video and imaging processing tasks from the DSP core, making more DSP MIPS available for common video and imaging algorithms. For more information on the HDVICP enhanced codecs, such as H.264 and MPEG4, please contact your nearest TI sales representative.

The rich peripheral set provides the ability to control external peripheral devices and communicate with external processors. For details on each of the peripherals, see the related sections later in this document and the associated peripheral reference guides.

The DM6467 has a complete set of development tools for both the ARM and DSP. These include C compilers, a DSP assembly optimizer to simplify programming and scheduling, and a Windows™ debugger interface for visibility into source code execution.

Copyright © 2007–2012, Texas Instruments Incorporated

1.3 Functional Block Diagram

Figure 1-1 shows the functional block diagram of the device.

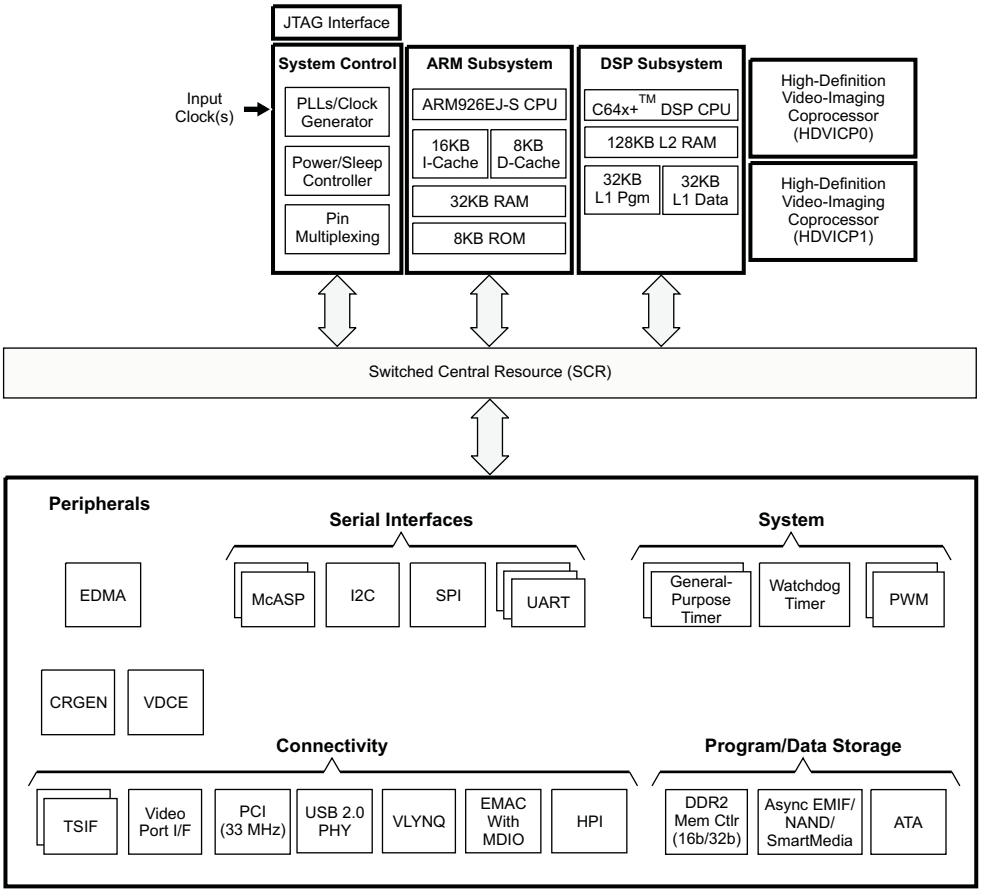

Figure 1-1. TMS320DM6467 Functional Block Diagram

1 Digital Media System-on-Chip (DMSoC) 1
1.1 Features 1
1.2 Description 3
1.3 Functional Block Diagram 5
2 Revision History 7
3 Device Overview 7
3.1 Device Characteristics 7
3.2 Device Compatibility 10
3.3 ARM Subsystem 10
3.4 DSP Subsystem 14
3.5 Memory Map Summary 19
3.6 Pin Assignments 23
3.7 Terminal Functions 29
3.8 Device Support 80
3.9 Documentation Support 82
3.10 Community Resources 82
4 Device Configurations 84
4.1 System Module Registers 84
4.2 Power Considerations 86
4.3 Clock Considerations 89
4.4 Boot Sequence 96
4.5 Configurations At Reset 102
4.6 Configurations After Reset 105
4.7 Multiplexed Pin Configurations 113
4.8 Debugging Considerations 136
5 System Interconnect 138
6 Device Operating Conditions 139
6.1 Absolute Maximum Ratings Over Operating Case Temperature Range (Unless Otherwise Noted) .. 139
6.2 Recommended Operating Conditions 140
6.3 Electrical Characteristics Over Recommended Ranges of Supply Voltage and Operating Temperature (Unless Otherwise Noted) 141
7 Peripheral Information and Electrical Specifications 142
7.1 Parameter Information 142
7.2 Recommended Clock and Control Signal Transition Behavior 143
7.3 Power Supplies 144
7.4 External Clock Input From DEV_MXI/DEV_CLKIN and AUX_MXI/AUX_CLKIN Pins 153
7.5 Clock PLLs 156
7.6 Enhanced Direct Memory Access (EDMA3) Controller 164
7.7 Reset 184
7.8 Interrupts 195
7.9 External Memory Interface (EMIF) 201
7.10 DDR2 Memory Controller 208
7.11 Video Port Interface (VPIF) 221
7.12 Transport Stream Interface (TSIF) 229
7.13 Clock Recovery Generator (CRGEN) 239
7.14 Video Data Conversion Engine (VDCE) 242
7.15 Peripheral Component Interconnect (PCI) 245
7.16 Ethernet MAC (EMAC) 251
7.17 Management Data Input/Output (MDIO) 261
7.18 Host-Port Interface (HPI) Peripheral 263
7.19 USB 2.0 271
7.20 ATA Controller 281
7.21 VLYNQ 296
7.22 Multichannel Audio Serial Port (McASP0/1) Peripherals 301
7.23 Serial Peripheral Interface (SPI) 313
7.24 Universal Asynchronouse Receiver/Transmitter (UART) 328
7.25 Inter-Integrated Circuit (I2C) 335
7.26 Pulse Width Modulator (PWM) 339
7.27 Timers 341
7.28 General-Purpose Input/Output (GPIO) 344
7.29 IEEE 1149.1 JTAG 347
8 Mechanical Packaging and Orderable Information 350
8.1 Thermal Data for CUT 350
8.2 Packaging Information 350

Copyright © 2007–2012, Texas Instruments Incorporated

2 Revision History

This data manual revision history highlights the technical changes made to the SPRS403G device-specific data manual to make it an SPRS403H revision.

Scope: Applicable updates to the DM646x DMSoC device family, specifically relating to the TMS320DM6467 device (all Silicon Revisions 3.0, 1.1, and 1.0) which is now in the production data (PD) stage of development have been incorporated.

- The ZUT 529-pin PBGA device orderables have now been classified as end of life (EOL) product and replaced with CUT 529-pin PBGA (Pb-Free die bump and solder ball) package orderables.

3 Device Overview

3.1 Device Characteristics

Table 3-1 provides an overview of the TMS320DM6467 SoC. The table shows significant features of the device, including the capacity of on-chip RAM, peripherals, internal peripheral bus frequency relative to the C64x+ DSP, and the package type with pin count.

Copyright © 2007–2012, Texas Instruments Incorporated

Table 3-1. Characteristics of the DM6467 Processor

HARDWARE FEATURES		DM6467
Peripherals Not all peripherals pins are available at the same time (for more detail, see the Device Configurations section).	DDR2 Memory Controller 297-MHz (-594) 310.5-MHz (-729)	DDR2 (16/32-bit bus width)
	Asynchronous EMIF (EMIFA)	Asynchronous (8/16-bit bus width) RAM, Flash (NOR, NAND)
	EDMA	64 independent channels 8 QDMA channels
	Timers	2 64-Bit General Purpose (each configurable as 2 separate 32-bit timers) 1 64-Bit Watchdog
	UART	3 (with SIR, MIR, CIR support and RTS/CTS flow control) (UART0 Supports Modem Interface)
	SPI	1 (supports 2 slave devices)
	I^2C	1 (Master/Slave)
	Multichannel Audio Serial Port (McASP)	2 (one transmit/receive with 4 serializers, one DIT transmit *only* with 1 serializer for S/PDIF output)
	10/100/1000 Ethernet MAC with Management Data Input/Output (MDIO)	1 (with MII/GMII Interface)
	VLYNQ	1
	General-Purpose Input/Output Port (GPIO)	Up to 33 pins
	PWM	2 outputs
	ATA	1 (ATA/ATAPI-6)
	PCI	1 (32-bit, 33 MHz)
	HPI	1 (16-/32-bit multiplexed address/data)
	VDCE	1 [horizontal and vertical downscaling, chroma conversion (4:2:2↔4:2:0)]
	Clock Recovery Generator (CRGEN)	1
	Power Sleep Controller (PSC)	1 (peripheral/module clock gating)
	Configurable Video Port Interface (VPIF) 99-MHz (-594) 108-MHz (-729)	2 8-bit BT.656 capture channels ***or*** 1 16-bit Y/C capture channel ***or*** 1 8-/10-/12-bit raw video capture channel ***and*** 2 8-bit BT.656 display channels or 1 16-bit Y/C display channel
	Transport Stream Interface (TSIF)	MPEG transport stream interface 1 with 8-bit parallel *or* serial input and output 1 with serial-only input and output Each with corresponding clock recovery generator (CRGEN) for external VCXO control.
	USB 2.0	High- and Full-Speed Device High-, Full-, and Low-Speed Host
On-Chip Memory	Size (Bytes)	248KB RAM, 8KB ROM
	Organization	DSP • 32KB L1 Program (L1P)/Cache (up to 32KB) • 32KB L1 Data (L1D)/Cache (up to 32KB) • 128KB Unified Mapped RAM/Cache (L2) ARM • 16KB I-cache • 8KB D-cache • 32KB RAM • 8KB ROM
CPU ID + CPU Rev ID	Control Status Register (CSR.[31:16])	0x1000

Copyright © 2007–2012, Texas Instruments Incorporated

Table 3-1. Characteristics of the DM6467 Processor (continued)

HARDWARE FEATURES			DM6467
C64x+ Megamodule Revision	Revision ID Register (MM_REVID[15:0]) (address location: 0x0181 2000)		0x0000
JTAG BSDL_ID	JTAGID Register (address location: 0x01C4 0028)		See Section 7.29.1, *JTAG ID (JTAGID) Register Description(s)*
CPU Frequency	MHz		DSP 594 MHz (-594) DSP 729 MHz (-729)
			ARM926 297 MHz(-594) ARM926 364.5 MHz(-729)
Cycle Time	ns		DSP 1.68 ns (-594) DSP 1.37 ns (-729)
			ARM926 3.37 ns (-594) ARM926 2.74 ns (-729)
Voltage	Core (V)	Normal	1.2 V (-594, -594A, -729, -729D)
		SmartReflex (see Table 4-39)	1.2 V (-594V, -594AV)
			1.05 V (-594V, -594AV)
	I/O (V)		1.8 V, 3.3 V (-594, -729)
PLL Options	DEV_CLKIN frequency multiplier (PLLC1) (27-MHz reference)		x1 (Bypass), x14 to x22 (-594) x1 (Bypass), x14 to x27 (-729)
	DEV_CLKIN frequency multiplier (PLLC2) (27-MHz reference)		x1 (Bypass), x14 to x22 (-594) x1 (Bypass), x14 to x23 (-729)
	AUX_CLKIN frequency		24/48-MHz reference
BGA Package	19 x 19 mm		529-Pin BGA (CUT)
Process Technology	µm		0.09 µm
Product Status(1)	Product Preview (PP), Advance Information (AI), or Production Data (PD)		PD

(1) PRODUCTION DATA information is current as of publication date. Products conform to specifications per the terms of the Texas Instruments standard warranty. Production processing does not necessarily include testing of all parameters.

Copyright © 2007–2012, Texas Instruments Incorporated

3.2 Device Compatibility

The ARM926EJ-S RISC CPU is compatible with other ARM9 CPUs from ARM Holdings plc.

The C64x+ DSP core is code-compatible with the C6000™ DSP platform and supports features of the C64x DSP family.

3.3 ARM Subsystem

The ARM Subsystem is designed to give the ARM926EJ-S (ARM9) master control of the device. In general, the ARM is responsible for configuration and control of the device; including the DSP Subsystem, the VPSS Subsystem, and a majority of the peripherals and external memories.

The ARM Subsystem includes the following features:

- ARM926EJ-S RISC processor
- ARMv5TEJ (32/16-bit) instruction set
- Little endian operation
- Co-Processor 15 (CP15)
- MMU
- 16KB Instruction cache
- 8KB Data cache
- Write Buffer
- 32KB Internal Tightly-Coupled Memory (TCM) RAM (32-bit wide access)
- 8KB Internal ROM (ARM bootloader for non-EMIFA boot options)
- Embedded Trace Module and Embedded Trace Buffer (ETM/ETB)
- ARM Interrupt Controller
- PLL Controller
- Power and Sleep Controller (PSC)
- System Module

3.3.1 ARM926EJ-S RISC CPU

The ARM Subsystem integrates the ARM926EJ-S processor. The ARM926EJ-S processor is a member of ARM9 family of general-purpose microprocessors. This processor is targeted at multi-tasking applications where full memory management, high performance, low die size, and low power are all important. The ARM926EJ-S processor supports the 32-bit ARM and 16 bit THUMB instruction sets, enabling the user to trade off between high performance and high code density. Specifically, the ARM926EJ-S processor supports the ARMv5TEJ instruction set, which includes features for efficient execution of Java byte codes, providing Java performance similar to Just in Time (JIT) Java interpreter, but without associated code overhead.

The ARM926EJ-S processor supports the ARM debug architecture and includes logic to assist in both hardware and software debug. The ARM926EJ-S processor has a Harvard architecture and provides a complete high performance subsystem, including:

- ARM926EJ -S integer core
- CP15 system control coprocessor
- Memory Management Unit (MMU)
- Separate instruction and data Caches
- Write buffer
- Separate instruction and data Tightly-Coupled Memories (TCMs) [internal RAM] interfaces
- Separate instruction and data AHB bus interfaces
- Embedded Trace Module and Embedded Trace Buffer (ETM/ETB)

Copyright © 2007–2012, Texas Instruments Incorporated

For more complete details on the ARM9, refer to the ARM926EJ-S Technical Reference Manual, available at http://www.arm.com

3.3.2 CP15

The ARM926EJ-S system control coprocessor (CP15) is used to configure and control instruction and data caches, Tightly-Coupled Memories (TCMs), Memory Management Unit (MMU), and other ARM subsystem functions. The CP15 registers are programmed using the MRC and MCR ARM instructions, when the ARM in a privileged mode such as supervisor or system mode.

3.3.3 MMU

The ARM926EJ-S MMU provides virtual memory features required by operating systems such as Linux®, Windows® CE, Ultron®, ThreadX®, etc. A single set of two level page tables stored in main memory is used to control the address translation, permission checks and memory region attributes for both data and instruction accesses. The MMU uses a single unified Translation Lookaside Buffer (TLB) to cache the information held in the page tables. The MMU features are:

- Standard ARM architecture v4 and v5 MMU mapping sizes, domains and access protection scheme.
- Mapping sizes are:
  - 1MB (sections)
  - 64KB (large pages)
  - 4KB (small pages)
  - 1KB (tiny pages)
- Access permissions for large pages and small pages can be specified separately for each quarter of the page (subpage permissions)
- Hardware page table walks
- Invalidate entire TLB, using CP15 register 8
- Invalidate TLB entry, selected by MVA, using CP15 register 8
- Lockdown of TLB entries, using CP15 register 10

3.3.4 Caches and Write Buffer

The size of the Instruction Cache is 16KB, Data cache is 8KB. Additionally, the Caches have the following features:

- Virtual index, virtual tag, and addressed using the Modified Virtual Address (MVA)
- Four-way set associative, with a cache line length of eight words per line (32-bytes per line) and with two dirty bits in the Dcache
- Dcache supports write-through and write-back (or copy back) cache operation, selected by memory region using the C and B bits in the MMU translation tables.
- Critical-word first cache refilling
- Cache lockdown registers enable control over which cache ways are used for allocation on a line fill, providing a mechanism for both lockdown, and controlling cache corruption
- Dcache stores the Physical Address TAG (PA TAG) corresponding to each Dcache entry in the TAG RAM for use during the cache line write-backs, in addition to the Virtual Address TAG stored in the TAG RAM. This means that the MMU is not involved in Dcache write-back operations, removing the possibility of TLB misses related to the write-back address.
- Cache maintenance operations provide efficient invalidation of, the entire Dcache or Icache, regions of the Dcache or Icache, and regions of virtual memory.

The write buffer is used for all writes to a noncachable bufferable region, write-through region and write misses to a write-back region. A separate buffer is incorporated in the Dcache for holding write-back for cache line evictions or cleaning of dirty cache lines. The main write buffer has 16-word data buffer and a four-address buffer. The Dcache write-back has eight data word entries and a single address entry.

Copyright © 2007–2012, Texas Instruments Incorporated

3.3.5 Tightly Coupled Memory (TCM)

ARM internal RAM is provided for storing real-time and performance-critical code/data and the Interrupt Vector table. ARM internal ROM enables non-EMIFA boot options, such as NAND and UART. The RAM and ROM memories interfaced to the ARM926EJ-S via the tightly coupled memory interface that provides for separate instruction and data bus connections. Since the ARM TCM does not allow instructions on the D-TCM bus or data on the I-TCM bus, an arbiter is included so that both data and instructions can be stored in the internal RAM/ROM. The arbiter also allows accesses to the RAM/ROM from extra-ARM sources (e.g., EDMA or other masters). The ARM926EJ-S has built-in DMA support for direct accesses to the ARM internal memory from a non-ARM master. Because of the time-critical nature of the TCM link to the ARM internal memory, all accesses from non-ARM devices are treated as DMA transfers.

Instruction and Data accesses are differentiated via accessing different memory map regions, with the instruction region from 0x0000 through 0x7FFF and data from 0x10000 through 0x17FFF. The instruction region at 0x0000 and data region at 0x10000 map to the same physical 32-KB TCM RAM. Placing the instruction region at 0x0000 is necessary to allow the ARM Interrupt Vector table to be placed at 0x0000, as required by the ARM architecture. The internal 32-KB RAM is split into two physical banks of 16KB each, which allows simultaneous instruction and data accesses to be accomplished if the code and data are in separate banks.

3.3.6 Advanced High-Performance Bus (AHB)

The ARM Subsystem uses the AHB port of the ARM926EJ-S to connect the ARM to the Config bus and the external memories. Arbiters are employed to arbitrate access to the separate D-AHB and I-AHB by the Config Bus and the external memories bus.

3.3.7 Embedded Trace Macrocell (ETM) and Embedded Trace Buffer (ETB)

To support real-time trace, the ARM926EJ-S processor provides an interface to enable connection of an Embedded Trace Macrocell (ETM). The ARM926ES-J Subsystem in the DM6467 also includes the Embedded Trace Buffer (ETB). The ETM consists of two parts:

- Trace Port provides real-time trace capability for the ARM9.
- Triggering facilities provide trigger resources, which include address and data comparators, counter, and sequencers.

The DM6467 trace port is not pinned out and is instead only connected to the Embedded Trace Buffer. The ETB has a 4KB buffer memory. ETB enabled debug tools are required to read/interpret the captured trace data.

3.3.8 ARM Memory Mapping

The ARM memory map is shown in Section 3.5, *Memory Map Summary* of this document. The ARM has access to memories shown in the following sections.

3.3.8.1 ARM Internal Memories

The ARM has access to the following ARM internal memories:

- 32KB ARM Internal RAM on TCM interface, logically separated into two 16KB pages to allow simultaneous access on any given cycle if there are separate accesses for code (I-TCM bus) and data (D-TCM) to the different memory regions.
- 8KB ARM Internal ROM

3.3.8.2 External Memories

The ARM has access to the following external memories:

- DDR2 Synchronous DRAM
- Asynchronous EMIF / NOR Flash / NAND Flash
- ATA

Copyright © 2007–2012, Texas Instruments Incorporated

3.3.8.3 DSP Memories

The ARM has access to the following DSP memories:

- L2 RAM
- L1P RAM
- L1D RAM

3.3.8.4 ARM-DSP Integration

DM6467 ARM and DSP integration features are as follows:

- DSP visibility from ARM's memory map, see Section 3.5, *Memory Map Summary*, for details
- Boot Modes for DSP - see *Device Configurations* section, Section 4.4.1, *DSP Boot*, for details
- ARM control of DSP boot / reset - see *Device Configurations* section, Section 4.4.2.4, *ARM Boot*, for details
- ARM control of DSP isolation and powerdown / powerup - see Section 4, *Device Configurations*, for details
- ARM & DSP Interrupts - see Section 7.8.1, *ARM CPU Interrupts*, and Section 7.8.2, *DSP Interrupts*, for details

3.3.9 Peripherals

The ARM9 has access to all of the peripherals on the DM6467 device.

3.3.10 PLL Controller (PLLC)

The ARM Subsystem includes the PLL Controller. The PLL Controller contains a set of registers for configuring DM6467's two internal PLLs (PLL1 and PLL2). The PLL Controller provides the following configuration and control:

- PLL Bypass Mode
- Set PLL multiplier parameters
- Set PLL divider parameters
- PLL power down
- Oscillator power down

The PLLs are briefly described in this document in the Clocking section. For more detailed information on the PLLs and PLL Controller register descriptions, see the *TMS320DM646x DMSoC ARM Subsystem* Reference Guide (literature number SPRUEP9).

3.3.11 Power and Sleep Controller (PSC)

The ARM Subsystem includes the Power and Sleep Controller (PSC). Through register settings accessible by the ARM9, the PSC provides two levels of power savings: peripheral/module clock gating and power domain shut-off. Brief details on the PSC are given in Section 7.3, *Power Supplies*. For more detailed information and complete register descriptions for the PSC, see the *TMS320DM646x DMSoC ARM Subsystem* Reference Guide (literature number SPRUEP9).

3.3.12 ARM Interrupt Controller (AINTC)

The ARM Interrupt Controller (AINTC) accepts device interrupts and maps them to either the ARM's IRQ (interrupt request) or FIQ (fast interrupt request). The ARM Interrupt Controller is briefly described in this document in the Interrupts section. For detailed information on the ARM Interrupt Controller, see the *TMS320DM646x DMSoC ARM Subsystem* Reference Guide (literature number SPRUEP9).

Copyright © 2007–2012, Texas Instruments Incorporated

3.3.13 System Module

The ARM Subsystem includes the System module. The System module consists of a set of registers for configuring and controlling a variety of system functions. For details and register descriptions for the System module, see Section 4, *Device Configurations* and see the *TMS320DM646x DMSoC ARM Subsystem* Reference Guide (literature number SPRUEP9).

3.3.14 Power Management

DM6467 has several means of managing power consumption. There is extensive use of clock gating, which reduces the power used by global device clocks and individual peripheral clocks. Clock management can be utilized to reduce clock frequencies in order to reduce switching power. For more details on power management techniques, see Section 4, *Device Configurations*, Section 7, *Peripheral and Electrical Specifications*, and see the *TMS320DM646x DMSoC ARM Subsystem* Reference Guide (literature number SPRUEP9).

DM6467 gives the programmer full flexibility to use any and all of the previously mentioned capabilities to customize an optimal power management strategy. Several typical power management scenarios are described in the following sections.

3.4 DSP Subsystem

The DSP Subsystem includes the following features:

- C64x+ DSP CPU
- 32KB L1 Program (L1P)/Cache (up to 32KB)
- 32KB L1 Data (L1D)/Cache (up to 32KB)
- 128KB Unified Mapped RAM/Cache (L2)
- Little endian

3.4.1 C64x+ DSP CPU Description

The C64x+ Central Processing Unit (CPU) consists of eight functional units, two register files, and two data paths as shown in Figure 3-1. The two general-purpose register files (A and B) each contain 32 32-bit registers for a total of 64 registers. The general-purpose registers can be used for data or can be data address pointers. The data types supported include packed 8-bit data, packed 16-bit data, 32-bit data, 40-bit data, and 64-bit data. Values larger than 32 bits, such as 40-bit-long or 64-bit-long values are stored in register pairs, with the 32 LSBs of data placed in an even register and the remaining 8 or 32 MSBs in the next upper register (which is always an odd-numbered register).

The eight functional units (.M1, .L1, .D1, .S1, .M2, .L2, .D2, and .S2) are each capable of executing one instruction every clock cycle. The .M functional units perform all multiply operations. The .S and .L units perform a general set of arithmetic, logical, and branch functions. The .D units primarily load data from memory to the register file and store results from the register file into memory.

The C64x+ CPU extends the performance of the C64x core through enhancements and new features.

Each C64x+ .M unit can perform one of the following each clock cycle: one 32 x 32 bit multiply, one 16 x 32 bit multiply, two 16 x 16 bit multiplies, two 16 x 32 bit multiplies, two 16 x 16 bit multiplies with add/subtract capabilities, four 8 x 8 bit multiplies, four 8 x 8 bit multiplies with add operations, and four 16 x 16 multiplies with add/subtract capabilities (including a complex multiply). There is also support for Galois field multiplication for 8-bit and 32-bit data. Many communications algorithms such as FFTs and modems require complex multiplication. The complex multiply (CMPY) instruction takes for 16-bit inputs and produces a 32-bit real and a 32-bit imaginary output. There are also complex multiplies with rounding capability that produces one 32-bit packed output that contain 16-bit real and 16-bit imaginary values. The 32 x 32 bit multiply instructions provide the extended precision necessary for audio and other high-precision algorithms on a variety of signed and unsigned 32-bit data types.

Copyright © 2007–2012, Texas Instruments Incorporated

The .L or (Arithmetic Logic Unit) now incorporates the ability to do parallel add/subtract operations on a pair of common inputs. Versions of this instruction exist to work on 32-bit data or on pairs of 16-bit data performing dual 16-bit add and subtracts in parallel. There are also saturated forms of these instructions.

The C64x+ core enhances the .S unit in several ways. In the C64x core, dual 16-bit MIN2 and MAX2 comparisons were only available on the .L units. On the C64x+ core they are also available on the .S unit which increases the performance of algorithms that do searching and sorting. Finally, to increase data packing and unpacking throughput, the .S unit allows sustained high performance for the quad 8-bit/16-bit and dual 16-bit instructions. Unpack instructions prepare 8-bit data for parallel 16-bit operations. Pack instructions return parallel results to output precision including saturation support.

Other new features include:

- **SPLOOP** - A small instruction buffer in the CPU that aids in creation of software pipelining loops where multiple iterations of a loop are executed in parallel. The SPLOOP buffer reduces the code size associated with software pipelining. Furthermore, loops in the SPLOOP buffer are fully interruptible.
- **Compact Instructions** - The native instruction size for the C6000 devices is 32 bits. Many common instructions such as MPY, AND, OR, ADD, and SUB can be expressed as 16 bits if the C64x+ compiler can restrict the code to use certain registers in the register file. This compression is performed by the code generation tools.
- **Instruction Set Enhancement** - As noted above, there are new instructions such as 32-bit multiplications, complex multiplications, packing, sorting, bit manipulation, and 32-bit Galois field multiplication.
- **Exceptions Handling** - Intended to aid the programmer in isolating bugs. The C64x+ CPU is able to detect and respond to exceptions, both from internally detected sources (such as illegal op-codes) and from system events (such as a watchdog time expiration).
- **Privilege** - Defines user and supervisor modes of operation, allowing the operating system to give a basic level of protection to sensitive resources. Local memory is divided into multiple pages, each with read, write, and execute permissions.
- **Time-Stamp Counter** - Primarily targeted for Real-Time Operating System (RTOS) robustness, a free-running time-stamp counter is implemented in the CPU which is ***not*** sensitive to system stalls.

For more details on the C64x+ CPU and its enhancements over the C64x architecture, see the following documents:

- *TMS320C64x/C64x+ DSP CPU and Instruction Set Reference Guide* (literature number SPRU732)
- *TMS320C64x Technical Overview* (literature number SPRU395)

Copyright © 2007–2012, Texas Instruments Incorporated

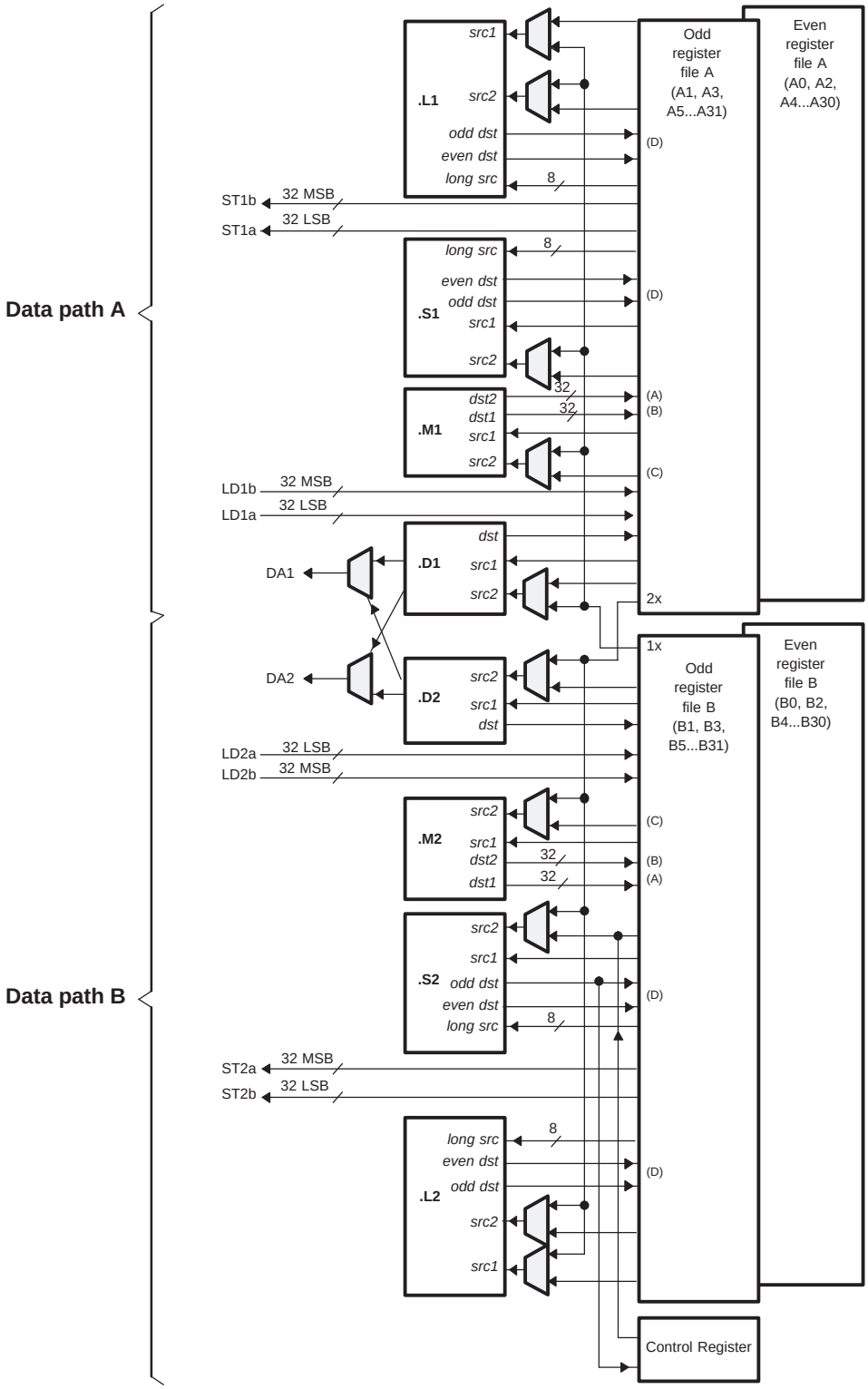

A. On .M unit, *dst2* is 32 MSB.
B. On .M unit, *dst1* is 32 LSB.
C. On C64x CPU .M unit, *src2* is 32 bits; on C64x+ CPU .M unit, *src2* is 64 bits.
D. On .L and .S units, *odd dst* connects to odd register files and *even dst* connects to even register files.

Figure 3-1. TMS320C64x+™ CPU (DSP Core) Data Paths

Copyright © 2007–2012, Texas Instruments Incorporated

3.4.2 DSP Memory Mapping

The DSP memory map is shown in Section 3.5, *Memory Map Summary*. Configuration of the control registers for DDR2, EMIFA, and ARM Internal RAM is supported by the ARM. The DSP has access to memories shown in the following sections.

3.4.2.1 ARM Internal Memories

The DSP has access to the 32KB ARM Internal RAM on the ARM D-TCM interface (i.e., data only).

3.4.2.2 External Memories

The DSP has access to the following External memories:

- DDR2 Synchronous DRAM
- Asynchronous EMIF / NOR Flash
- ATA

3.4.2.3 DSP Internal Memories

The DSP has access to the following DSP memories:

- L2 RAM
- L1P RAM
- L1D RAM

3.4.2.4 C64x+ CPU

The C64x+ core uses a two-level cache-based architecture. The Level 1 Program memory/cache (L1P) consists of 32 KB memory space that can be configured as mapped memory or direct mapped cache. The Level 1 Data memory/cache (L1D) consists of 32 KB that can be configured as mapped memory or 2-way set associated cache. The Level 2 memory/cache (L2) consists of a 128 KB RAM memory space that is shared between program and data space. L2 memory can be configured as mapped memory, cache, or a combination of both.

Table 3-2 shows a memory map of the C64x+ CPU cache registers for the device.

Table 3-2. C64x+ Cache Registers

HEX ADDRESS RANGE	REGISTER ACRONYM	DESCRIPTION
0x0184 0000	L2CFG	L2 Cache configuration register
0x0184 0020	L1PCFG	L1P Size Cache configuration register
0x0184 0024	L1PCC	L1P Freeze Mode Cache configuration register
0x0184 0040	L1DCFG	L1D Size Cache configuration register
0x0184 0044	L1DCC	L1D Freeze Mode Cache configuration register
0x0184 0048 - 0x0184 0FFC	-	Reserved
0x0184 1000	EDMAWEIGHT	L2 EDMA access control register
0x0184 1004 - 0x0184 1FFC	-	Reserved
0x0184 2000	L2ALLOC0	L2 allocation register 0
0x0184 2004	L2ALLOC1	L2 allocation register 1
0x0184 2008	L2ALLOC2	L2 allocation register 2
0x0184 200C	L2ALLOC3	L2 allocation register 3
0x0184 2010 - 0x0184 3FFF	-	Reserved
0x0184 4000	L2WBAR	L2 writeback base address register
0x0184 4004	L2WWC	L2 writeback word count register
0x0184 4010	L2WIBAR	L2 writeback invalidate base address register
0x0184 4014	L2WIWC	L2 writeback invalidate word count register
0x0184 4018	L2IBAR	L2 invalidate base address register

Copyright © 2007–2012, Texas Instruments Incorporated

Table 3-2. C64x+ Cache Registers (continued)

HEX ADDRESS RANGE	REGISTER ACRONYM	DESCRIPTION
0x0184 401C	L2IWC	L2 invalidate word count register
0x0184 4020	L1PIBAR	L1P invalidate base address register
0x0184 4024	L1PIWC	L1P invalidate word count register
0x0184 4030	L1DWIBAR	L1D writeback invalidate base address register
0x0184 4034	L1DWIWC	L1D writeback invalidate word count register
0x0184 4038	-	Reserved
0x0184 4040	L1DWBAR	L1D Block Writeback
0x0184 4044	L1DWWC	L1D Block Writeback
0x0184 4048	L1DIBAR	L1D invalidate base address register
0x0184 404C	L1DIWC	L1D invalidate word count register
0x0184 4050 - 0x0184 4FFF	-	Reserved
0x0184 5000	L2WB	L2 writeback all register
0x0184 5004	L2WBINV	L2 writeback invalidate all register
0x0184 5008	L2INV	L2 Global Invalidate without writeback
0x0184 500C - 0x0184 5027	-	Reserved
0x0184 5028	L1PINV	L1P Global Invalidate
0x0184 502C - 0x0184 5039	-	Reserved
0x0184 5040	L1DWB	L1D Global Writeback
0x0184 5044	L1DWBINV	L1D Global Writeback with Invalidate
0x0184 5048	L1DINV	L1D Global Invalidate without writeback
0x0184 8000 - 0x0184 803C	MAR0 - MAR15	Reserved (corresponds to byte address 0x0000 0000 - 0x0FFF FFFF)
0x0184 8040	MAR16	Memory Attribute Registers for ARM TCM (corresponds to byte address 0x1000 0000 - 0x10FF FFFF)
0x0184 8044 - 0x0184 80FC	MAR17 - MAR63	Reserved (corresponds to byte address 0x1100 0000 - 0x3FFF FFFF)
0x0184 8100	MAR64	Reserved (corresponds to byte address 0x4000 0000 - 0x40FF FFFF)
0x0184 8104	MAR65	Reserved (corresponds to byte address 0x4100 0000 - 0x41FF FFFF)
0x0184 8108 - 0x0184 8124	MAR66 - MAR73	Memory Attribute Registers for EMIFA (corresponds to byte address 0x4200 0000 - 0x49FF FFFF)
0x0184 8128 - 0x0184 812C	MAR74 - MAR75	Reserved (corresponds to byte address 0x4A00 0000 - 0x4BFF FFFF)
0x0184 8130 - 0x0184 813C	MAR76 - MAR79	Memory Attribute Registers for VLYNQ (corresponds to byte address 0x4C00 0000 - 0x4FFF FFFF)
0x0184 8140 - 0x0184 81FC	MAR80 - MAR127	Reserved (corresponds to byte address 0x5000 0000 - 0x7FFF FFFF)
0x0184 8200 - 0x0184 82FC	MAR128 - MAR191	Memory Attribute Registers for DDR2 (corresponds to byte address 0x8000 0000 - 0xBFFF FFFF)
0x0184 8300 - 0x0184 83FC	MAR192 - MAR255	Reserved (corresponds to byte address 0xC000 0000 - 0xFFFF FFFF)

3.4.3 Peripherals

The DSP has access/controllability of the following peripherals:

- HDVICP0/1
- EDMA
- McASP0/1
- 2 Timers (Timer0 and Timer1) that can each be configured as 1 64-bit or 2 32-bit timers

3.4.4 DSP Interrupt Controller

The DSP Interrupt Controller accepts device interrupts and appropriately maps them to the DSP's available interrupts. The DSP Interrupt Controller is briefly described in this document in the Interrupts section. For more detailed on the DSP Interrupt Controller, see the *TMS320C64x+ DSP Megamodule* Reference Guide (literature number SPRU871).

Copyright © 2007–2012, Texas Instruments Incorporated

3.5 Memory Map Summary

Table 3-3 shows the memory map address ranges of the device. Table 3-4 depicts the expanded map of the Configuration Space (0x0180 0000 through 0x0FFF FFFF). The device has multiple on-chip memories associated with its two processors and various subsystems. To help simplify software development a unified memory map is used where possible to maintain a consistent view of device resources across all bus masters.

Copyright © 2007–2012, Texas Instruments Incorporated

Table 3-3. Memory Map Summary

START ADDRESS	END ADDRESS	SIZE (Bytes)	ARM	C64x+	EDMA/ PERIPHERAL	MASTER PERIPHERAL ACCESSIBILITY(1)								
						Video Port	VDCE	TSIF (0/1)	EMAC	HPI	PCI	USB	VLYNQ	ATA
0x0000 0000	0x0000 3FFF	16K	ARM RAM0 (Instruction)	Reserved	Reserved									
0x0000 4000	0x0000 7FFF	16K	ARM RAM1 (Instruction)											
0x0000 8000	0x0000 FFFF	32K	ARM ROM (Instruction)											
0x0001 0000	0x0001 3FFF	16K	ARM RAM0 (Data)											
0x0001 4000	0x0001 7FFF	16K	ARM RAM1 (Data)											
0x0001 8000	0x0001 FFFF	32K	ARM ROM (Data)											
0x0002 0000	0x000F FFFF	896K	Reserved											
0x0010 0000	0x003F FFFF	3M												
0x0040 0000	0x004F FFFF	1M												
0x0050 0000	0x005F FFFF	1M												
0x0060 0000	0x006F FFFF	1M												
0x0070 0000	0x007F FFFF	1M												
0x0080 0000	0x0080 FFFF	64K												
0x0081 0000	0x0081 7FFF	32K	Reserved	Hole (MPPA Disable)(2)	Reserved									
0x0081 8000	0x0083 7FFF	128K	Reserved	L2 RAM/Cache	Reserved									
0x0083 8000	0x008F FFFF	800K		Reserved										
0x0090 0000	0x0092 FFFF	192K												
0x0093 0000	0x009F FFFF	832K												
0x00A0 0000	0x00DF FFFF	4M												
0x00E0 0000	0x00E0 7FFF	32K		L1P RAM/Cache										
0x00E0 8000	0x00EF FFFF	992K		Reserved										
0x00F0 0000	0x00F0 7FFF	32K		L1D RAM/Cache										
0x00F0 8000	0x017F FFFF	9184K		Reserved										
0x0180 0000	0x01BB FFFF	3840K		CFG Space										
0x01BC 0000	0x01BC 0FFF	4K	ARM ETB Memory											
0x01BC 1000	0x01BC 17FF	2K	ARM ETB Registers											
0x01BC 1800	0x01BC 18FF	256	ARM IceCrusher											
0x01BC 1900	0x01BC 1BFF	768	Reserved											
0x01BC 1C00	0x01BF FFFF	249K												
0x01C0 0000	0x0FFF FFFF	228M	CFG Bus Peripherals	CFG Bus Peripherals	CFG Bus Peripherals					✓(3)	✓(3)		✓(3)	
0x1000 0000	0x1000 FFFF	64K	Reserved		Reserved									
0x1001 0000	0x1001 3FFF	16K		ARM RAM0 (Data)	ARM RAM0 (Data)		✓	✓		✓	✓	✓	✓	✓
0x1001 4000	0x1001 7FFF	16K		ARM RAM1 (Data)	ARM RAM1 (Data)		✓	✓		✓	✓	✓	✓	✓
0x1001 8000	0x1001 FFFF	32K		ARM ROM (Data)	ARM ROM (Data)		✓	✓		✓	✓	✓	✓	✓
0x1002 0000	0x10FF FFFF	16256K												
0x1100 0000	0x113F FFFF	4M		Reserved	Reserved									
0x1140 0000	0x114F FFFF	1M												
0x1150 0000	0x115F FFFF	1M												
0x1160 0000	0x116F FFFF	1M												
0x1170 0000	0x117F FFFF	1M												
0x1180 0000	0x1180 FFFF	64K												
0x1181 0000	0x1181 7FFF	32K	Reserved	Hole (MPPA Disable)(2)	Reserved									
0x1181 8000	0x1183 7FFF	128K	L2 RAM/Cache	L2 RAM/Cache	L2 RAM/Cache				✓	✓	✓	✓	✓	✓
0x1183 8000	0x118F FFFF	800K	Reserved	Reserved	Reserved									
0x1190 0000	0x11DF FFFF	5M												
0x11E0 0000	0x11E0 7FFF	32K	L1P RAM/Cache	L1P RAM/Cache	L1P RAM/Cache					✓	✓	✓	✓	✓
0x11E0 8000	0x11EF FFFF	992K	Reserved	Reserved	Reserved									

(1) These peripherals have their own DMA engine or master port interface to the DMSoC system bus and ***do not*** use the EDMA for data transfers. The ✓ symbol indicates that the peripheral has a valid connection through the device switch fabric to the memory region identified in the EDMA access column.

(2) MPPA should be used to disable the hole. For more information on MPPA, see the *TMS320C64x+ DSP Megamodule* Reference Guide (SPRU871).

(3) The HPI's, PCI's, and VLYNQ's access to the configuration bus peripherals is limited, see Table 3-4, *Configuration Memory Map Summary* for the details.

Copyright © 2007–2012, Texas Instruments Incorporated

Table 3-3. Memory Map Summary (continued)

START ADDRESS	END ADDRESS	SIZE (Bytes)	ARM	C64x+	EDMA/ PERIPHERAL	MASTER PERIPHERAL ACCESSIBILITY(1)								
						Video Port	VDCE	TSIF (0/1)	EMAC	HPI	PCI	USB	VLYNQ	ATA
0x11F0 0000	0x11F0 7FFF	32K	L1D RAM/Cache	L1D RAM/Cache	L1D RAM/Cache					✓	✓	✓	✓	✓
0x11F0 8000	0x11FF FFFF	992K	Reserved	Reserved	Reserved									
0x1200 0000	0x1FFF FFFF	224M												
0x2000 0000	0x2000 7FFF	32K	DDR2 Control Registers	DDR2 Control Registers	DDR2 Control Registers						✓			
0x2000 8000	0x2000 FFFF	32K	EMIFA Control Registers	EMIFA Registers	EMIFA Registers									
0x2001 0000	0x2001 7FFF	32K	VLYNQ Control Registers	VLYNQ Registers	VLYNQ Registers									
0x2001 8000	0x200F FFFF	928K	Reserved	Reserved	Reserved									
0x2010 0000	0x2FFF FFFF	255M												
0x3000 0000	0x3FFF FFFF	256M	PCI Data		PCI Data									
0x4000 0000	0x403F FFFF	4M	Reserved	Reserved	Reserved									
0x4040 0000	0x4043 FFFF	256K												
0x4044 0000	0x4047 FFFF	256K												
0x4048 0000	0x404B FFFF	256K												
0x404C 0000	0x404F FFFF	256K												
0x4050 0000	0x405F FFFF	1M												
0x4060 0000	0x4063 FFFF	256K	Reserved	Reserved	Reserved									
0x4064 0000	0x4067 FFFF	256K												
0x4068 0000	0x406B FFFF	256K												
0x406C 0000	0x406F FFFF	256K												
0x4070 0000	0x41FF FFFF	25M												
0x4200 0000	0x43FF FFFF	32M	EMIFA Data ($\overline{CS2}$)(4)	EMIFA Data ($\overline{CS2}$)(4)	EMIFA Data ($\overline{CS2}$)(4)		✓	✓				✓	✓	
0x4400 0000	0x45FF FFFF	32M	EMIFA Data ($\overline{CS3}$)(4)	EMIFA Data ($\overline{CS3}$)(4)	EMIFA Data ($\overline{CS3}$)(4)		✓	✓				✓	✓	
0x4600 0000	0x47FF FFFF	32M	EMIFA Data ($\overline{CS4}$)(4)	EMIFA Data ($\overline{CS4}$)(4)	EMIFA Data ($\overline{CS4}$)(4)		✓	✓				✓	✓	
0x4800 0000	0x49FF FFFF	32M	EMIFA Data ($\overline{CS5}$)(4)	EMIFA Data ($\overline{CS5}$)(4)	EMIFA Data ($\overline{CS5}$)(4)		✓	✓				✓	✓	
0x4A00 0000	0x4BFF FFFF	32M	Reserved	Reserved	Reserved									
0x4C00 0000	0x4FFF FFFF	64M	VLYNQ (Remote Data)	VLYNQ (Remote Data)	VLYNQ (Remote Data)		✓	✓	✓	✓	✓	✓		✓
0x5000 0000	0x7FFF FFFF	768M	Reserved	Reserved	Reserved									
0x8000 0000	0x9FFF FFFF	512M	DDR2 Memory	DDR2 Memory	DDR2 Memory	✓	✓	✓	✓	✓	✓	✓	✓	✓
0xA000 0000	0xBFFF FFFF	512M	Reserved	Reserved	Reserved									
0xC000 0000	0xFFFF FFFF	1G	Reserved	Reserved	Reserved									

(4) EMIFA $\overline{CS0}$ and $\overline{CS1}$ are ***not*** functionally supported on the DM6467, and therefore, are ***not*** pinned out.

Table 3-4. Configuration Memory Map Summary

START ADDRESS	END ADDRESS	SIZE (Bytes)	ARM/EDMA	C64x+	MASTER PERIPHERAL ACCESSIBILITY		
					HPI	PCI	VLYNQ
0x0180 0000	0x0180 FFFF	64K	Reserved	C64x+ Interrupt Controller			
0x0181 0000	0x0181 0FFF	4K		C64x+ Powerdown Controller			
0x0181 1000	0x0181 1FFF	4K		C64x+ Security ID			
0x0181 2000	0x0181 2FFF	4K		C64x+ Revision ID			
0x0182 0000	0x0182 FFFF	64K		C64x+ EMC			
0x0183 0000	0x0183 FFFF	64K		Reserved			
0x0184 0000	0x0184 FFFF	64K		C64x+ Memory System			
0x0185 0000	0x01BB FFFF	3520K		Reserved			
0x01BC 0000	0x01BC 00FF	256	ARM ETB Memory	Reserved			
0x01BC 0100	0x01BC 01FF	256					
0x01BC 0200	0x01BC 0FFF	3.5K					
0x01BC 1000	0x01BC 17FF	2K	ARM ETB Registers				
0x01BC 1800	0x01BC 18FF	256	ARM Ice Crusher				
0x01BC 1900	0x01BF FFFF	255744	Reserved				
0x01C0 0000	0x01C0 FFFF	64K	EDMA CC	EDMA CC			
0x01C1 0000	0x01C1 03FF	1K	EDMA TC0	EDMA TC0			
0x01C1 0400	0x01C1 07FF	1K	EDMA TC1	EDMA TC1			
0x01C1 0800	0x01C1 0BFF	1K	EDMA TC2	EDMA TC2			
0x01C1 0C00	0x01C1 0FFF	1K	EDMA TC3	EDMA TC3			
0x01C1 1000	0x01C1 1FFF	4K	Reserved	Reserved			
0x01C1 2000	0x01C1 23FF	1K	Video Port				
0x01C1 2400	0x01C1 27FF	1K	Reserved	Reserved			
0x01C1 2800	0x01C1 2FFF	2K	VDCE				
0x01C1 3000	0x01C1 33FF	1K	TSIF0				
0x01C1 3400	0x01C1 37FF	1K	TSIF1				
0x01C1 3800	0x01C1 9FFF	26K	Reserved	Reserved			
0x01C1 A000	0x01C1 A7FF	2K	PCI Control Registers				
0x01C1 A800	0x01C1 FFFF	22K	Reserved	Reserved			
0x01C2 0000	0x01C2 03FF	1K	UART0		✓	✓	✓
0x01C2 0400	0x01C2 07FF	1K	UART1		✓	✓	✓
0x01C2 0800	0x01C2 0BFF	1K	UART2		✓	✓	✓
0x01C2 0C00	0x01C2 0FFF	1K	Reserved	Reserved	✓	✓	✓
0x01C2 1000	0x01C2 13FF	1K	I2C		✓	✓	✓
0x01C2 1400	0x01C2 17FF	1K	Timer0	Timer0	✓	✓	✓
0x01C2 1800	0x01C2 1BFF	1K	Timer1	Timer1	✓	✓	✓
0x01C2 1C00	0x01C2 1FFF	1K	Timer2 (Watchdog)		✓	✓	✓
0x01C2 2000	0x01C2 23FF	1K	PWM0		✓	✓	✓
0x01C2 2400	0x01C2 27FF	1K	PWM1		✓	✓	✓
0x01C2 2800	0x01C2 5FFF	14K	Reserved	Reserved	✓	✓	✓
0x01C2 6000	0x01C2 63FF	1K	CRGEN0		✓	✓	✓
0x01C2 6400	0x01C2 67FF	1K	CRGEN1		✓	✓	✓
0x01C2 6800	0x01C3 FFFF	102K	Reserved	Reserved	✓	✓	✓
0x01C4 0000	0x01C4 07FF	2K	System Module	System Module	✓	✓	✓
0x01C4 0800	0x01C4 0BFF	1K	PLL Controller 1		✓	✓	✓
0x01C4 0C00	0x01C4 0FFF	1K	PLL Controller 2		✓	✓	✓
0x01C4 1000	0x01C4 1FFF	4K	Power and Sleep Controller	Power and Sleep Controller	✓	✓	✓
0x01C4 2000	0x01C4 7FFF	24K	Reserved	Reserved	✓	✓	✓
0x01C4 8000	0x01C4 83FF	1K	ARM Interrupt Controller	Reserved	✓	✓	✓
0x01C4 8400	0x01C6 3FFF	111K	Reserved	Reserved	✓	✓	✓
0x01C6 4000	0x01C6 5FFF	8K	USB2.0 Registers / RAM		✓	✓	✓

Copyright © 2007–2012, Texas Instruments Incorporated

Table 3-4. Configuration Memory Map Summary (continued)

START ADDRESS	END ADDRESS	SIZE (Bytes)	ARM/EDMA	C64x+	MASTER PERIPHERAL ACCESSIBILITY		
					HPI	PCI	VLYNQ
0x01C6 6000	0x01C6 67FF	2K	ATA		✓	✓	✓
0x01C6 6800	0x01C6 6FFF	2K	SPI		✓	✓	✓
0x01C6 7000	0x01C6 77FF	2K	GPIO		✓	✓	✓
0x01C6 7800	0x01C6 7FFF	2K	HPI	HPI	✓	✓	✓
0x01C6 8000	0x01C7 FFFF	96K	Reserved	Reserved	✓	✓	✓
0x01C8 0000	0x01C8 0FFF	4K	EMAC Control Registers	Reserved	✓	✓	✓
0x01C8 1000	0x01C8 1FFF	4K	EMAC Control Module Registers		✓	✓	✓
0x01C8 2000	0x01C8 3FFF	8K	EMAC Control Module RAM		✓	✓	✓
0x01C8 4000	0x01C8 47FF	2K	MDIO Control Registers		✓	✓	✓
0x01C8 4800	0x01D0 0FFF	498K	Reserved	Reserved	✓	✓	✓
0x01D0 1000	0x01D0 13FF	1K	McASP0 Registers	McASP0 Registers	✓	✓	✓
0x01D0 1400	0x01D0 17FF	1K	McASP0 Data Port	McASP0 Data Port	✓	✓	✓
0x01D0 1800	0x01D0 1BFF	1K	McASP1 Registers	McASP1 Registers	✓	✓	✓
0x01D0 1C00	0x01D0 1FFF	1K	McASP1 Data Port	McASP1 Data Port	✓	✓	✓
0x01D0 2000	0x01DF FFFF	1016K	Reserved	Reserved			
0x01E0 0000	0x01FF FFFF	2M	Reserved	Reserved			
0x0200 0000	0x021F FFFF	2M	Reserved	Reserved			
0x0220 0000	0x023F FFFF	2M	Reserved	Reserved			
0x0240 0000	0x0FFF FFFF	220M	Reserved	Reserved			

3.6 Pin Assignments

Extensive use of pin multiplexing is used to accommodate the largest number of peripheral functions in the smallest possible package. Pin multiplexing is controlled using a combination of hardware configuration at device reset and software programmable register settings. For more information on pin muxing, see Section 4.7, *Multiplexed Pin Configurations*, of this document.

3.6.1 Pin Map (Bottom View)

Figure 3-2 through Figure 3-7 show the bottom view of the package pin assignments in six quadrants (A, B, C, D, E, and F).

Copyright © 2007–2012, Texas Instruments Incorporated

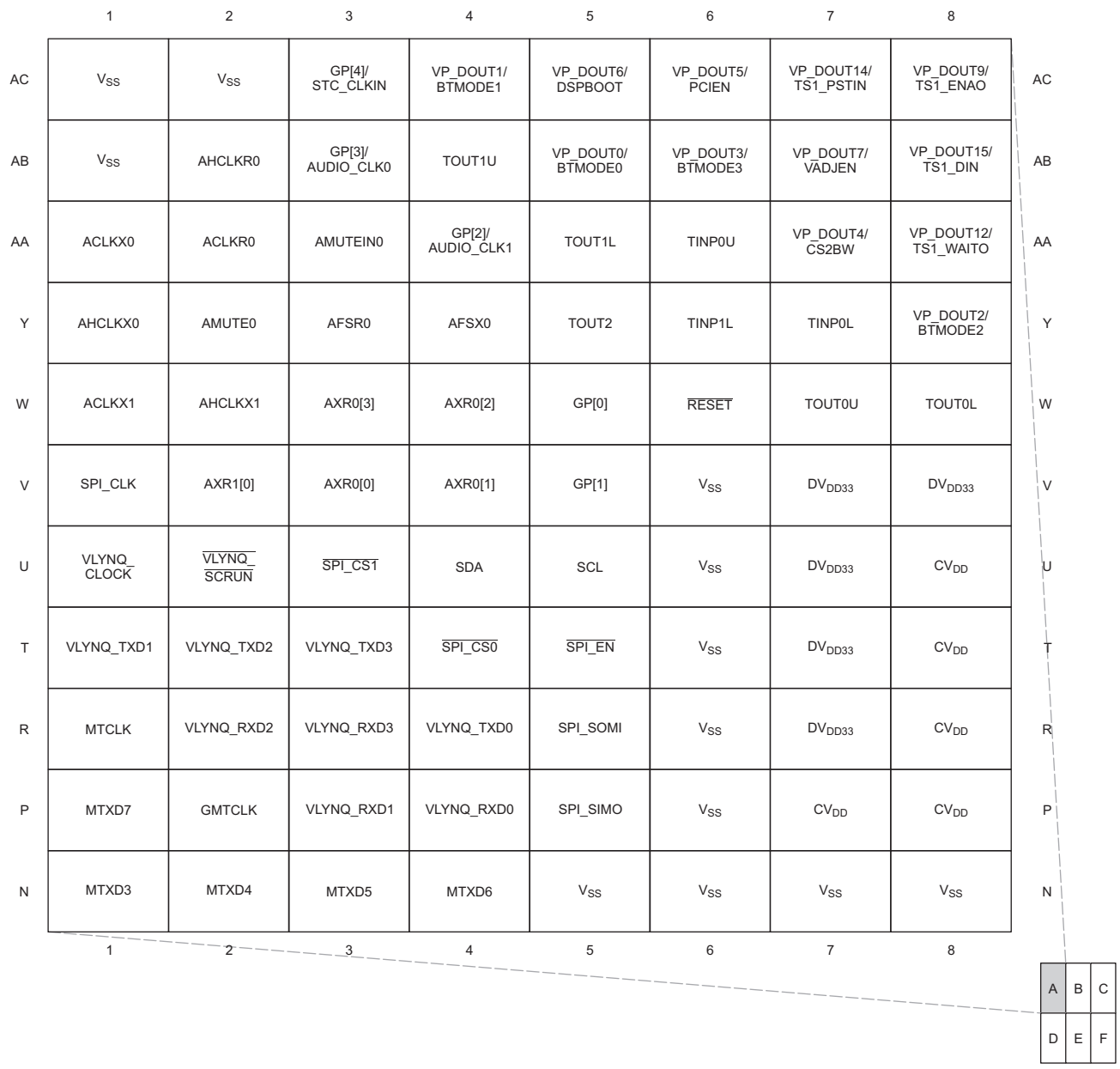

Figure 3-2. Pin Map [Section A]

Copyright © 2007–2012, Texas Instruments Incorporated

	9	10	11	12	13	14	15	16	
AC	VP_CLKIN3/ TS1_CLKO	VP_CLKO3/ TS0_CLKO	TS1_CLKIN	$\overline{\text{UCTS0}}$/ USD0	VP_CLKIN0	VP_DIN4/ TS0_DOUT4/ TS1_WAITO	VP_DIN0/ TS0_DOUT0	VP_DIN8/ TS0_DIN0	AC
AB	VP_DOUT8/ TS1_WAITIN	VP_DOUT11/ TS1_DOUT	$\overline{\text{UDSR0}}$/ TS0_PSTO/ GP[37]	V_{SS}	URXD0/ TS1_DIN	VP_DIN5/ TS0_DOUT5/ TS1_EN_WAITO	VP_DIN1/ TS0_DOUT1	VP_DIN9/ TS0_DIN1	AB
AA	VP_CLKO2	VP_DOUT10/ TS1_PSTO	$\overline{\text{UDCD0}}$/ TS0_WAITIN/ GP[38]	DV_{DD33}	$\overline{\text{URTS0}}$/ UIRTX0/ TS1_EN_WAITO	VP_DIN6/ TS0_DOUT6/ TS1_PSTIN	VP_DIN2/ TS0_DOUT2	VP_DIN10/ TS0_DIN2	AA
Y	VP_DOUT13/ TS1_EN_WAITO	VP_CLKIN2	$\overline{\text{URIN0}}$/ GP[8]/ TS1_WAITIN	$\overline{\text{UDTR0}}$/ TS0_ENAO/ GP[36]	UTXD0/ URCTX0/ TS1_PSTIN	VP_DIN7/ TS0_DOUT7/ TS1_DIN	VP_DIN3/ TS0_DOUT3	VP_DIN11/ TS0_DIN3	Y
W	DV_{DD33}	DV_{DD33}	DV_{DD33}	DV_{DD33}	DV_{DD33}	DV_{DD33}	DV_{DD33}	DV_{DD33}	W
V	CV_{DD}	CV_{DD}	CV_{DD}	CV_{DD}	CV_{DD}	CV_{DD}	CV_{DD}	CV_{DD}	V
U	CV_{DD}	CV_{DD}	V_{SS}	V_{SS}	V_{SS}	CV_{DD}	CV_{DD}	CV_{DD}	U
T	CV_{DD}	CV_{DD}	CV_{DD}	V_{SS}	CV_{DD}	CV_{DD}	CV_{DD}	V_{SS}	T
R	CV_{DD}	CV_{DD}	CV_{DD}	V_{SS}	CV_{DD}	CV_{DD}	CV_{DD}	V_{SS}	R
P	CV_{DD}	CV_{DD}	CV_{DD}	V_{SS}	CV_{DD}	CV_{DD}	CV_{DD}	V_{SS}	P
N	V_{SS}	V_{SS}	V_{SS}	V_{SS}	V_{SS}	V_{SS}	V_{SS}	V_{SS}	N
	9	10	11	12	13	14	15	16	

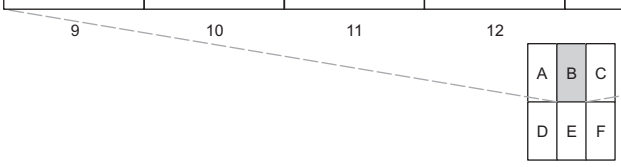

Figure 3-3. Pin Map [Section B]

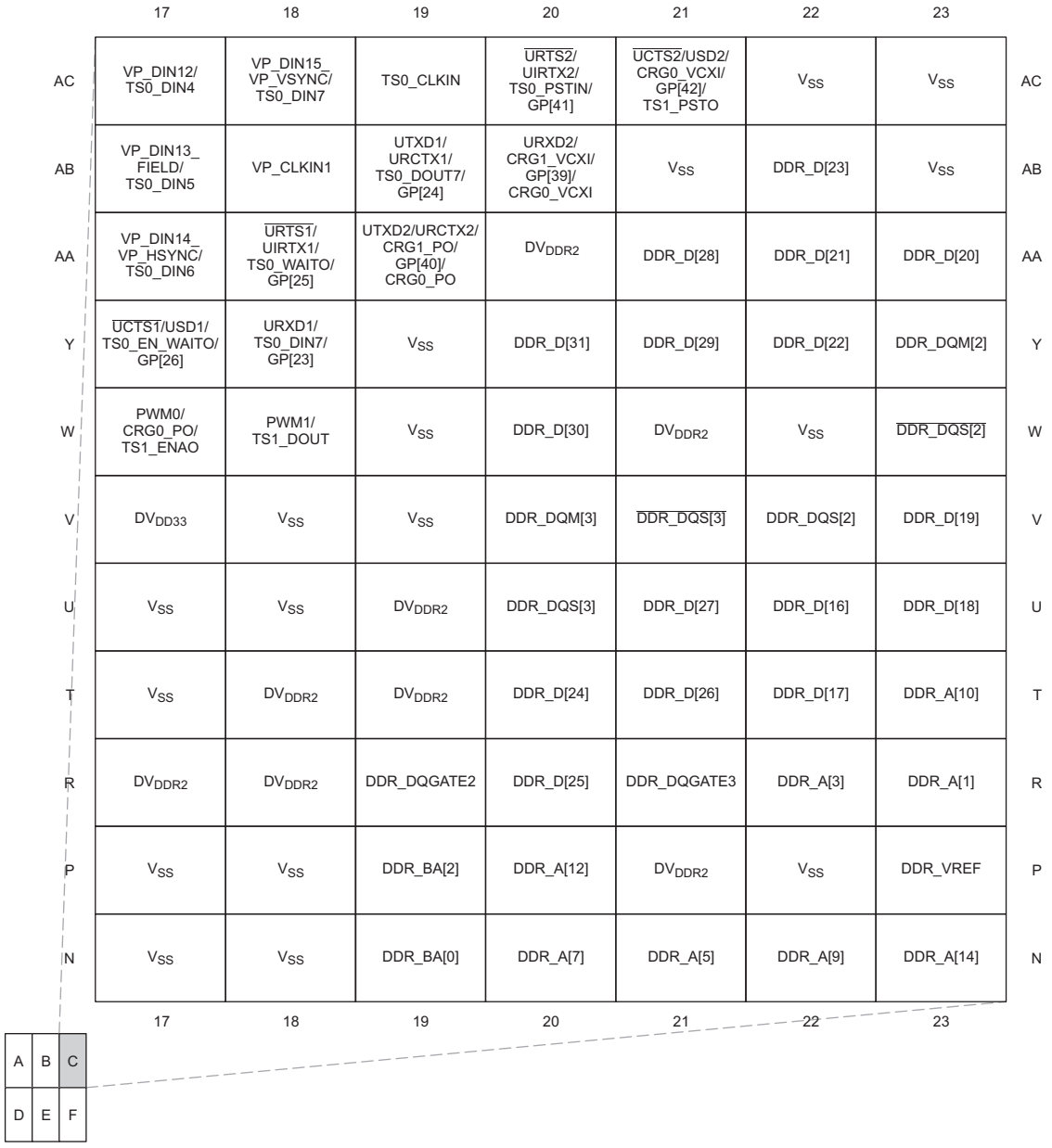

Figure 3-4. Pin Map [Section C]

Copyright © 2007–2012, Texas Instruments Incorporated

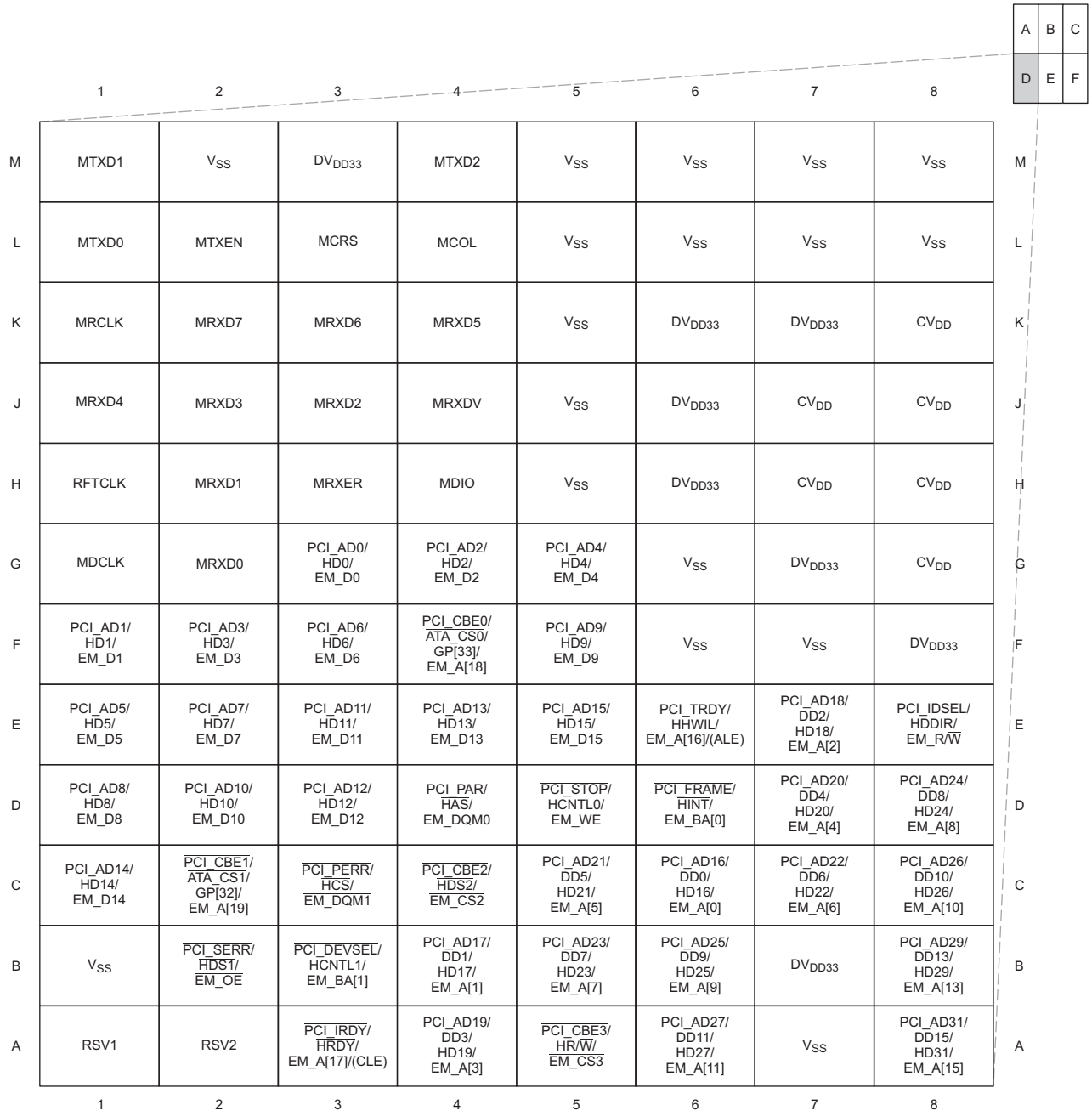

	1	2	3	4	5	6	7	8
M	MTXD1	V_{SS}	DV_{DD33}	MTXD2	V_{SS}	V_{SS}	V_{SS}	V_{SS}
L	MTXD0	MTXEN	MCRS	MCOL	V_{SS}	V_{SS}	V_{SS}	V_{SS}
K	MRCLK	MRXD7	MRXD6	MRXD5	V_{SS}	DV_{DD33}	DV_{DD33}	CV_{DD}
J	MRXD4	MRXD3	MRXD2	MRXDV	V_{SS}	DV_{DD33}	CV_{DD}	CV_{DD}
H	RFTCLK	MRXD1	MRXER	MDIO	V_{SS}	DV_{DD33}	CV_{DD}	CV_{DD}
G	MDCLK	MRXD0	PCI_AD0/ HD0/ EM_D0	PCI_AD2/ HD2/ EM_D2	PCI_AD4/ HD4/ EM_D4	V_{SS}	DV_{DD33}	CV_{DD}
F	PCI_AD1/ HD1/ EM_D1	PCI_AD3/ HD3/ EM_D3	PCI_AD6/ HD6/ EM_D6	PCI_CBE0/ ATA_CS0/ GP[33]/ EM_A[18]	PCI_AD9/ HD9/ EM_D9	V_{SS}	V_{SS}	DV_{DD33}
E	PCI_AD5/ HD5/ EM_D5	PCI_AD7/ HD7/ EM_D7	PCI_AD11/ HD11/ EM_D11	PCI_AD13/ HD13/ EM_D13	PCI_AD15/ HD15/ EM_D15	PCI_TRDY/ HHWIL/ EM_A[16]/(ALE)	PCI_AD18/ DD2/ HD18/ EM_A[2]	PCI_IDSEL/ HDDIR/ EM_R/W
D	PCI_AD8/ HD8/ EM_D8	PCI_AD10/ HD10/ EM_D10	PCI_AD12/ HD12/ EM_D12	PCI_PAR/ HAS/ EM_DQM0	PCI_STOP/ HCNTL0/ EM_WE	PCI_FRAME/ HINT/ EM_BA[0]	PCI_AD20/ DD4/ HD20/ EM_A[4]	PCI_AD24/ DD8/ HD24/ EM_A[8]
C	PCI_AD14/ HD14/ EM_D14	PCI_CBE1/ ATA_CS1/ GP[32]/ EM_A[19]	PCI_PERR/ HCS/ EM_DQM1	PCI_CBE2/ HDS2/ EM_CS2	PCI_AD21/ DD5/ HD21/ EM_A[5]	PCI_AD16/ DD0/ HD16/ EM_A[0]	PCI_AD22/ DD6/ HD22/ EM_A[6]	PCI_AD26/ DD10/ HD26/ EM_A[10]
B	V_{SS}	PCI_SERR/ HDS1/ EM_OE	PCI_DEVSEL/ HCNTL1/ EM_BA[1]	PCI_AD17/ DD1/ HD17/ EM_A[1]	PCI_AD23/ DD7/ HD23/ EM_A[7]	PCI_AD25/ DD9/ HD25/ EM_A[9]	DV_{DD33}	PCI_AD29/ DD13/ HD29/ EM_A[13]
A	RSV1	RSV2	PCI_IRDY/ HRDY/ EM_A[17]/(CLE)	PCI_AD19/ DD3/ HD19/ EM_A[3]	PCI_CBE3/ HR/W/ EM_CS3	PCI_AD27/ DD11/ HD27/ EM_A[11]	V_{SS}	PCI_AD31/ DD15/ HD31/ EM_A[15]

Figure 3-5. Pin Map [Section D]

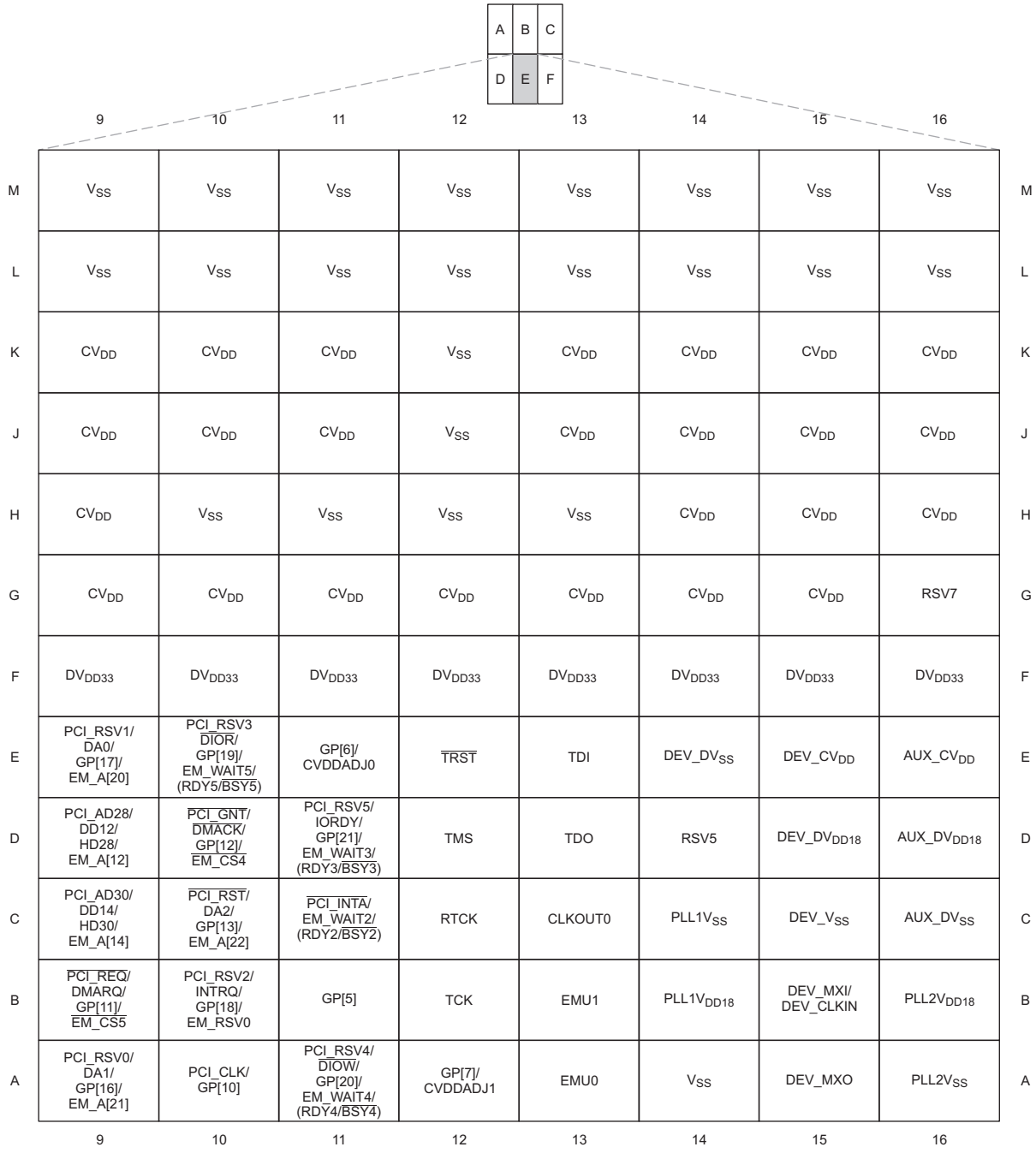

Figure 3-6. Pin Map [Section E]

Copyright © 2007–2012, Texas Instruments Incorporated

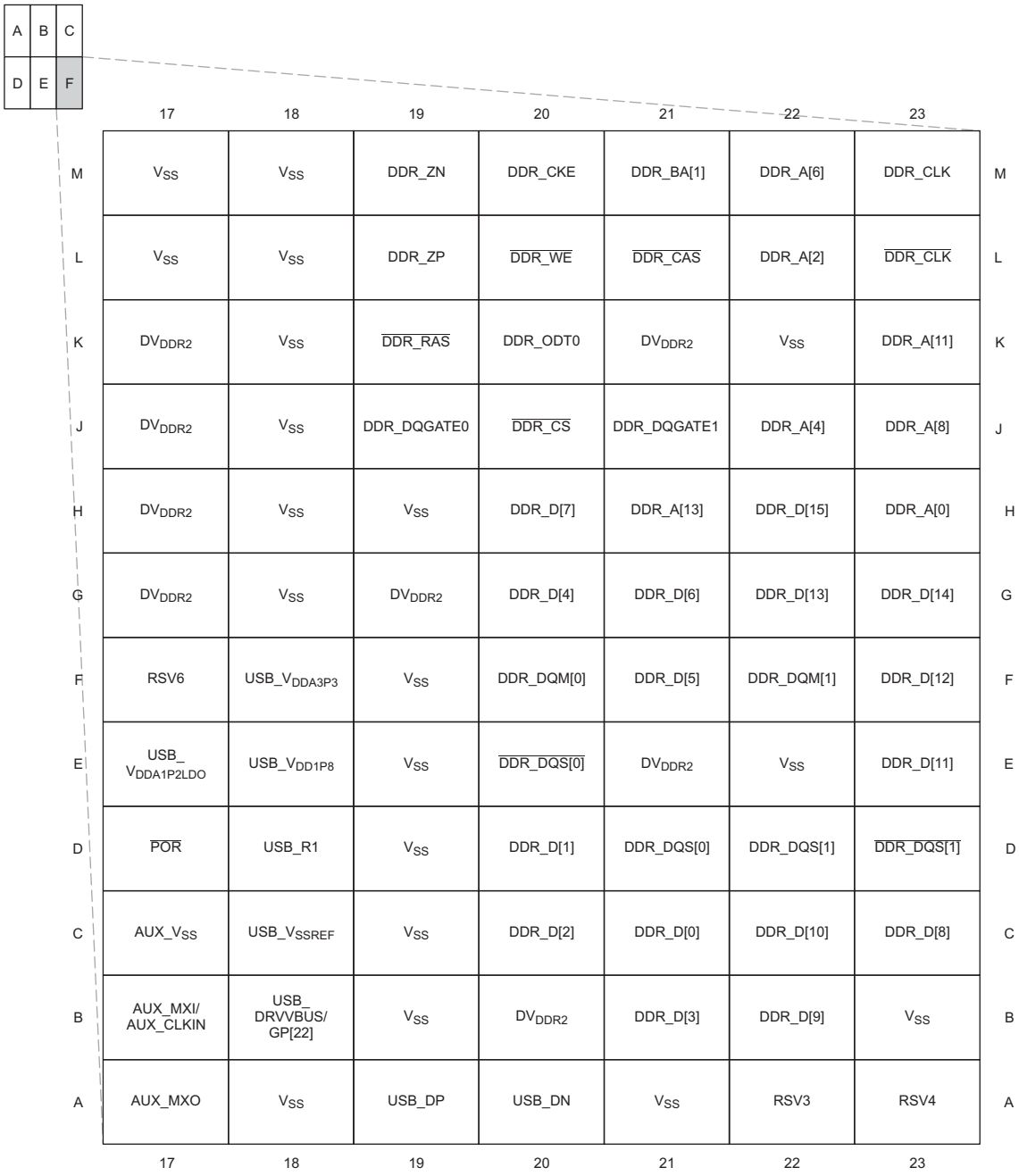

Figure 3-7. Pin Map [Section F]

3.7 Terminal Functions

The terminal functions tables (Table 3-5 through Table 3-32) identify the external signal names, the associated pin (ball) numbers along with the mechanical package designator, the pin type, whether the pin has any internal pullup or pulldown resistors, and a functional pin description. For more detailed information on device configuration, peripheral selection, multiplexed/shared pin, and see the *Device Configurations* section of this data manual.

Copyright © 2007–2012, Texas Instruments Incorporated

3.7.1 BOOT

Table 3-5. BOOT Terminal Functions

SIGNAL NAME	NO.	TYPE(1)	OTHER(2) (3)	DESCRIPTION	
BOOT					
ARM Boot Mode configuration bits. These pins are multiplexed between ARM boot mode and the Video Port Interface (VPIF). At reset, the boot mode inputs BTMODE[3:0] are sampled to determine the ARM boot configuration. See below the boot modes set by these inputs. For more details on the types of boot modes, see the Section 4.4.1, *Boot Modes*. After reset, these pins are Video port data outputs 3 through 0 (VP_DOUT[3:0]).					
				BTMODE[3:0]	**ARM Boot Mode**
VP_DOUT0/ **BTMODE0**	AB5	I/O/Z	IPD DV_{DD33}	0000	Emulation Boot (PCIEN = 0)
				0001	Reserved
				0010	HPI Boot (16-Bit width) (if PCIEN = 0) or PCI Boot without auto-initialization (if PCIEN = 1)
				0011	HPI Boot (32-Bit width) (if PCIEN = 0) or PCI Boot with auto-initialization (if PCIEN = 1)
VP_DOUT1/ **BTMODE1**	AC4	I/O/Z	IPD DV_{DD33}	0100	EMIFA Direct Boot (ROM/NOR) (PCIEN = 0) [error if PCIEN = 1; defaults to UART0]
				0101	Reserved
				0110	I2C Boot
				0111	NAND Flash Boot (PCIEN = 0) [error if PCIEN = 1]
VP_DOUT2/ **BTMODE2**	Y8	I/O/Z	IPD DV_{DD33}	1000	UART0 Boot
				1001	Reserved
				1010	Reserved
				1011	Reserved
VP_DOUT3/ **BTMODE3**	AB6	I/O/Z	IPD DV_{DD33}	1100 - 1101	Reserved
				1110	SPI Boot
				1111	Reserved
DEVICE CONTROL					
VP_DOUT4/ **CS2BW**	AA7	I/O/Z	IPD DV_{DD33}	EMIFA CS2 space data bus width. This pin is multiplexed between EMIFA control and the VPIF. At reset, the input state is sampled to set the EMIFA data bus width for the CS2 (boot) chip select region. For an 8-bit-wide EMIFA data bus, CS2BW = 0. For a 16-bit-wide EMIFA data bus, CS2BW = 1. After reset, this pin is video port data output 4 (VP_DOUT4).	
VP_DOUT5/ **PCIEN**	AC6	I/O/Z	IPD DV_{DD33}	PCI Enable. This pin is multiplexed between PCI Control and the VPIF. At reset, the input state is sampled to enable/disable the PCI interface pin multiplexing. **Note:** When PCI boot mode is ***not*** used, for proper device operation out of reset PCIEN ***must*** be "0". 0 = PCI pin function is disabled; EMIFA or HPI pin function enabled 1 = PCI pin function is enabled After reset, this pin is video port data output 5 (VP_DOUT5).-	

(1) I = Input, O = Output, Z = High impedance, S = Supply voltage, GND = Ground, A = Analog signal
(2) IPD = Internal pulldown, IPU = Internal pullup. For more detailed information on pullup/pulldown resistors and situations where external pullup/pulldown resistors are required, see Section 4.8.1, *Pullup/Pulldown Resistors*.
(3) Specifies the operating I/O supply voltage for each signal

Copyright © 2007–2012, Texas Instruments Incorporated

Table 3-5. BOOT Terminal Functions (continued)

SIGNAL NAME	NO.	TYPE(1)	OTHER(2) (3)	DESCRIPTION
VP_DOUT6/ **DSPBOOT**	AC5	I/O/Z	IPD DV_{DD33}	DSP boot source bit. This pin is multiplexed between DSP boot and the VPIF. At reset, the input state is sampled to set the DSP boot source DSPBOOT. The DSP is booted by the ARM when DSPBOOT = 0. The DSP boots from EMIFA when DSPBOOT = 1 (and ARM HPI or PCI boot mode is ***not*** selected). After reset, this pin is video port data output 6 (VP_DOUT6).
VP_DOUT7 / **VADJEN**	AB7	I/O/Z	IPD DV_{DD33}	Voltage Adjust Enable (SmartReflex). This pin is multiplexed between SmartReflex Output Control Enable and the VPIF. At reset, the input state is sampled to determine whether the SmartReflex Control Outputs are enbabled or disabled. 0 = SmartReflex outputs disabled [default]. GP[6]/CVDDADJ0 and GP[7]/CVDDADJ1 pins function as GPIO. 1 = SmartReflex outputs enabled. GP[6]/CVDDADJ0 and GP[7]/CVDDADJ1 pins function as SmartReflex control outputs to the adjustable core power supply [1.2 V or 1.05 V].

Copyright © 2007–2012, Texas Instruments Incorporated

3.7.2 Oscillator/PLL

Table 3-6. Oscillator/PLL Terminal Functions

SIGNAL NAME	NO.	TYPE(1)	OTHER(2)	DESCRIPTION
OSCILLATOR, PLL				
DEV_MXI/ DEV_CLKIN	B15	I	DEV_DV_{DD18}	Crystal input DEV_MXI for DEV oscillator (system oscillator, typically 27 MHz). If the internal oscillator is bypassed, this pin is the 1.8-V external oscillator clock input.
DEV_MXO	A15	O	DEV_DV_{DD18}	Crystal output for DEV oscillator. If the internal oscillator is bypassed, DEV_MXO should be left as a No Connect.
DEV_DV_{DD18}	D15	S	(3)	1.8-V power supply for DEV oscillator. If the internal oscillator is bypassed, DEV_DV_{DD18} should still be connected to the 1.8-V power supply.
DEV_DV_{SS}	E14	GND	(3)	I/O ground for DEV oscillator. If the internal oscillator is bypassed, DEV_DV_{SS} should be connected to ground V_{SS}.
DEV_CV_{DD}	E15	S	(3)	1.2-/1.05-V power supply for DEV oscillator. If the internal oscillator is bypassed, DEV_CV_{DD} should be connected to the 1.2-/1.05-V power supply (CV_{DD}).
DEV_V_{SS}	C15	GND	(3)	Ground for DEV oscillator. Connect to crystal load capacitors. ***Do not*** connect to board ground (V_{SS}). If the internal oscillator is bypassed, DEV_V_{SS} should still be connected to ground V_{SS}.
AUX_MXI/ AUX_CLKIN	B17	I	AUX_DV_{DD18}	Crystal input for Auxiliary (AUX) oscillator (24/48 MHz for USB, and UART2/1/0 and McASP1/0). If the internal oscillator is bypassed, this pin is the 1.8-V external oscillator clock input. When the peripheral ***is not*** used, AUX_MXI should be left as a No Connect.
AUX_MXO	A17	O	AUX_DV_{DD18}	Crystal output for AUX oscillator. If the internal oscillator is bypassed, AUX_MXO should be left as a No Connect. When the peripheral ***is not*** used, AUX_MXO should be left as a No Connect.
AUX_DV_{DD18}	D16	S	(3)	1.8-V power supply for AUX oscillator. If the internal oscillator is bypassed, AUX_DV_{DD18} should still be connected to the 1.8-V power supply. When the peripheral ***is not*** used, AUX_DV_{DD18} should be connected to the 1.8-V power supply.
AUX_DV_{SS}	C16	GND	(3)	I/O ground for AUX oscillator. If the internal oscillator is bypassed, AUX_DV_{SS} should be connected to ground (V_{SS}). When the peripheral ***is not*** used, AUX_DV_{SS} should be connected to ground (V_{SS}).
AUX_CV_{DD}	E16	S	(3)	1.2-/1.05-V power supply for AUX oscillator. If the internal oscillator is bypassed, AUX_CV_{DD} should be connected to the 1.2-/1.05-V power supply (CV_{DD}). When the peripheral ***is not*** used, AUX_CV_{DD} should be connected to the 1.2-/1.05-V power supply (CV_{DD}).
AUX_V_{SS}	C17	GND	(3)	Ground for AUX oscillator. Connect to crystal load capacitors. ***Do not*** connect to board ground (V_{SS}). If the internal oscillator is bypassed, AUX_V_{SS} should still be connected to ground (V_{SS}). When the peripheral ***is not*** used, AUX_V_{SS} should be connected to ground (V_{SS}).
$PLL1V_{DD18}$	B14	S	(3)	1.8-V power supply for PLLs.
$PLL2V_{DD18}$	B16			
$PLL1V_{SS}$	C14	GND	(3)	Ground for PLLs.
$PLL2V_{SS}$	A16			

(1) I = Input, O = Output, Z = High impedance, S = Supply voltage, GND = Ground, A = Analog signal
(2) Specifies the operating I/O supply voltage for each signal
(3) For more information, see the *Recommended Operating Conditions* table

Copyright © 2007–2012, Texas Instruments Incorporated

3.7.3 Clock Generator

Table 3-7. Clock Generator Terminal Functions

SIGNAL NAME	SIGNAL NO.	TYPE(1)	OTHER(2) (3)	DESCRIPTION
CLOCK GENERATOR				
CLKOUT0	C13	O/Z	DV_{DD33}	Configurable output clock.
GP[3]/ **AUDIO_CLK0**	AB3	I/O/Z	IPD DV_{DD33}	This pin is multiplexed between GPIO and the Audio Clock Selector. For the audio clock selector, this pin is the configurable AUDIO_CLK0 output.
GP[2]/ **AUDIO_CLK1**	AA4	I/O/Z	IPD DV_{DD33}	This pin is multiplexed between GPIO and the Audio Clock Selector. For the audio clock selector, this pin is the configurable AUDIO_CLK1 output.
GP[4]/ **STC_CLKIN**	AC3	I/O/Z	IPD DV_{DD33}	This pin is multiplexed between GPIO and the TSIF Clock Selector. For TSIF, this pin is the STC_CLKIN which can be used as an external clock source for the TSIF counters or as TSIF output clock.

(1) I = Input, O = Output, Z = High impedance, S = Supply voltage, GND = Ground, A = Analog signal
(2) IPD = Internal pulldown, IPU = Internal pullup. For more detailed information on pullup/pulldown resistors and situations where external pullup/pulldown resistors are required, see Section 4.8.1, *Pullup/Pulldown Resistors*.
(3) Specifies the operating I/O supply voltage for each signal

Copyright © 2007–2012, Texas Instruments Incorporated

3.7.4 RESET and JTAG

Table 3-8. RESET and JTAG Terminal Functions

SIGNAL NAME	NO.	TYPE(1)	OTHER(2) (3)	DESCRIPTION
RESET				
$\overline{\text{RESET}}$	W6	I	IPU DV_{DD33}	Device reset.
$\overline{\text{POR}}$	D17	I	IPU DV_{DD33}	Power-on reset.
JTAG				
TMS	D12	I	IPU DV_{DD33}	JTAG test-port mode select input. For proper device operation, ***do not*** oppose the IPU on this pin.
TDO	D13	O/Z	– DV_{DD33}	JTAG test-port data output.
TDI	E13	I	IPU DV_{DD33}	JTAG test-port data input.
TCK	B12	I	IPU DV_{DD33}	JTAG test-port clock input.
RTCK	C12	O/Z	– DV_{DD33}	JTAG test-port return clock output.
$\overline{\text{TRST}}$	E12	I	IPD DV_{DD33}	JTAG test-port reset. For IEEE 1149.1 JTAG compatibility, see the IEEE 1149.1 JTAG compatibility statement portion of this data manual.
EMU1	B13	I/O/Z	IPU DV_{DD33}	Emulation pin 1
EMU0	A13	I/O/Z	IPU DV_{DD33}	Emulation pin 0

(1) I = Input, O = Output, Z = High impedance, S = Supply voltage, GND = Ground, A = Analog signal
(2) IPD = Internal pulldown, IPU = Internal pullup. For more detailed information on pullup/pulldown resistors and situations where external pullup/pulldown resistors are required, see Section 4.8.1, *Pullup/Pulldown Resistors*.
(3) Specifies the operating I/O supply voltage for each signal

Copyright © 2007–2012, Texas Instruments Incorporated

3.7.5 Asynchronous External Memory Interface (EMIFA)

Table 3-9. Asynchronous External Memory Interface (EMIFA) Terminal Functions

SIGNAL NAME	NO.	TYPE(1)	OTHER(2) (3)	DESCRIPTION
EMIFA BOOT CONFIGURATION				
VP_DOUT4/ **CS2BW**	AA7	I/O/Z	IPD DV_{DD33}	EMIFA CS2 space data bus width. This pin is multiplexed between EMIFA control and the VPIF. At reset, the input state is sampled to set the EMIFA data bus width for the CS2 (boot) chip select region. For an 8-bit-wide EMIFA data bus, CS2BW = 0. For a 16-bit-wide EMIFA data bus, CS2BW = 1. After reset, this pin is video port data output 4 (VP_DOUT4).
VP_DOUT6/ **DSPBOOT**	AC5	I/O/Z	IPD DV_{DD33}	DSP boot source bit. This pin is multiplexed between DSP boot and the VPIF. At reset, the input state is sampled to set the DSP boot source DSPBOOT. The DSP is booted by the ARM when DSPBOOT = 0. The DSP boots from EMIFA when DSPBOOT=1. After reset, this pin is video port data output 6 (VP_DOUT6).
EMIFA FUNCTIONAL PINS: ASYNC				
PCI_CBE2/ HDS2/ **EM_CS2**	C4	I/O/Z	IPU DV_{DD33}	This pin is multiplexed between PCI, HPI, and EMIFA. In EMIFA mode, this pin is Chip Select 2 output EM_CS2 (O/Z). This is the chip select used for EMIFA boot modes. Asynchronous memories (i.e., NOR Flash) or NAND flash.
PCI_CBE3/ HR/W **EM_CS3**	A5	I/O/Z	IPU DV_{DD33}	This pin is multiplexed between PCI, HPI, and EMIFA. In EMIFA mode, this pin is Chip Select 3 output EM_CS3 (O/Z). Asynchronous memories (i.e., NOR Flash).
PCI_GNT/ DACK/ GP[12]/ **EM_CS4**	D10	I/O/Z	IPU DV_{DD33}	This pin is multiplexed between PCI, ATA, GPIO, and EMIFA. In EMIFA mode, this pin is Chip Select 4 output EM_CS4 (O/Z). Asynchronous memories (i.e., NOR Flash). This signal is ***not*** available when ATA is enabled (i.e., EMIF NAND Flash mode).
PCI_REQ/ DMARQ/ GP[11]/ **EM_CS5**	B9	I/O/Z	IPU DV_{DD33}	This pin is multiplexed between PCI, ATA, GPIO, and EMIFA. In EMIFA mode, this pin is Chip Select 5 output EM_CS5 (O/Z). This signal is ***not*** available when ATA is enabled (i.e., EMIF NAND Flash mode).
PCI_IDSEL/ HDDIR/ **EM_R/W**	E8	I/O/Z	IPU DV_{DD33}	This pin is multiplexed between PCI, ATA, and EMIFA. In EMIFA mode, this pin is the read/write output EM_R/W (O/Z).
PCI_SERR/ HDS1/ **EM_OE**	B2	I/O/Z	IPU DV_{DD33}	This pin is multiplexed between PCI, HPI, and EMIFA. In EMIFA mode, this pin is the output enable output EM_OE (O/Z).
PCI_STOP/ HCNTL0/ **EM_WE**	D5	I/O/Z	IPU DV_{DD33}	This pin is multiplexed between PCI, HPI, and EMIFA. In EMIFA mode, this pin is the write enable output EM_WE (O/Z).
PCI_PERR/ HCS/ **EM_DQM1**	C3	I/O/Z	IPU DV_{DD33}	These pins are multiplexed between PCI, HPI, and EMIFA. In EMIFA mode, these pins are EM_DQM[1:0] and act as byte enables (O/Z).
PCI_PAR/ HAS/ **EM_DQM0**	D4	I/O/Z	IPU DV_{DD33}	
PCI_INTA/ **EM_WAIT2/** (RDY2/BSY2)	C11	I/O/Z	IPU DV_{DD33}	This pin is multiplexed between PCI and EMIFA. In EMIFA mode, this pin is wait state extension input 2 EM_WAIT2 (I). When used for EMIFA (NAND), this pin is the ready/busy 2 input (RDY2/BSY2).
PCI_RSV5/IORDY/ GP[21]/**EM_WAIT3/** (RDY3/BSY3)	D11	I/O/Z	IPU DV_{DD33}	This pin is multiplexed between PCI, ATA, GPIO, and EMIFA. In EMIFA mode, this pin is wait state extension input 3 EM_WAIT3 (I). When used for EMIFA (NAND), this pin is the ready/busy 3 input (RDY3/BSY3).

(1) I = Input, O = Output, Z = High impedance, S = Supply voltage, GND = Ground, A = Analog signal
(2) IPD = Internal pulldown, IPU = Internal pullup. For more detailed information on pullup/pulldown resistors and situations where external pullup/pulldown resistors are required, see Section 4.8.1, *Pullup/Pulldown Resistors*.
(3) Specifies the operating I/O supply voltage for each signal

Copyright © 2007–2012, Texas Instruments Incorporated

Table 3-9. Asynchronous External Memory Interface (EMIFA) Terminal Functions (continued)

SIGNAL NAME	NO.	TYPE(1)	OTHER(2) (3)	DESCRIPTION
PCI_RSV4/DIOW/ GP[20]/**EM_WAIT4**/ (RDY4/BSY4)	A11	I/O/Z	IPU DV_{DD33}	This pin is multiplexed between PCI, ATA, GPIO, and EMIFA. In EMIFA mode, this pin is wait state extension input 4 EM_WAIT4 (I). When used for EMIFA (NAND), this pin is the ready/busy 4 input (RDY4/BSY4).
PCI_RSV3/DIOR/ GP[19]/**EM_WAIT5**/ (RDY5/BSY5)	E10	I/O/Z	IPU DV_{DD33}	This pin is multiplexed between PCI, ATA, GPIO, and EMIFA. For EMIFA, this pin is wait state extension input 5 EM_WAIT5 (I). When used for EMIFA (NAND), this pin is the ready/busy 5 input (RDY5/BSY5).
PCI_FRAME/ HINT/ **EM_BA[0]**	D6	I/O/Z	IPU DV_{DD33}	This pin is multiplexed between PCI, HPI, and EMIFA. For EMIFA, this is the Bank Address 0 output EM_BA[0] (O/Z). When connected to a 16-bit asynchronous memory, this pin has the same function as EMIF address pin 22 (EM_A[22]). When connected to an 8-bit asynchronous memory, this pin is the lowest order bit of the byte address.
PCI_DEVSEL/ HCNTL1/ **EM_BA[1]**	B3	I/O/Z	IPU DV_{DD33}	This pin is multiplexed between PCI, HPI, and EMIFA. For EMIFA, this is the Bank Address 1 output EM_BA[1] (O/Z). When connected to a 16 bit asynchronous memory this pin is the lowest order bit of the 16-bit word address. When connected to an 8-bit asynchronous memory, this pin is the second bit of the address.
PCI_RSV2/INTRQ/ GP[18]/**EM_RSV0**	B10	I/O/Z	IPD DV_{DD33}	This pin is multiplexed between PCI, ATA, GPIO, and EMIFA. In EMIFA mode, this pin is reserved. This signal is ***not*** available when ATA is enabled (i.e., EMIF NAND Flash mode).
PCI_RST/ DA2/ GP[13]/**EM_A[22]**	C10	I/O/Z	IPD DV_{DD33}	This pin is multiplexed between PCI, ATA, GPIO, and EMIFA. In EMIFA mode, this pin is address bit 22 output EM_A[22] (O/Z). This signal is ***not*** available when ATA is enabled (i.e., EMIF NAND Flash mode).
PCI_RSV0/DA1/ GP[16]/**EM_A[21]**	A9	I/O/Z	IPD DV_{DD33}	This pin is multiplexed between PCI, ATA, GPIO, and EMIFA. In EMIFA mode, this pin is address bit 21 output EM_A[21] (O/Z). This signal is ***not*** available when ATA is enabled (i.e., EMIF NAND Flash mode).
PCI_RSV1/DA0/ GP[17]/**EM_A[20]**	E9	I/O/Z	IPD DV_{DD33}	This pin is multiplexed between PCI ATA, GPIO, and EMIFA. In EMIFA mode, this pin is address bit 20 output EM_A[20] (O/Z). This signal is ***not*** available when ATA is enabled (i.e., EMIF NAND Flash mode).
PCI_CBE1/ ATA_CS1/ GP[32]/**EM_A[19]**	C2	I/O/Z	IPU DV_{DD33}	This pin is multiplexed between PCI, ATA, GPIO, and EMIFA. In EMIFA mode, this pin is address bit 19 output EM_A[19] (O/Z). This signal is ***not*** available when ATA is enabled (i.e., EMIF NAND Flash mode).
PCI_CBE0/ ATA_CS0/ GP[33]/**EM_A[18]**	F4	I/O/Z	IPU DV_{DD33}	This pin is multiplexed between PCI, ATA, GPIO, and EMIFA. In EMIFA mode, this pin is address bit 18 output EM_A[18] (O/Z). This signal is ***not*** available when ATA is enabled (i.e., EMIF NAND Flash mode).
PCI_IRDY/ HRDY/ **EM_A[17]**/(CLE)	A3	I/O/Z	IPU DV_{DD33}	This pin is multiplexed between PCI, HPI, and EMIFA. In EMIFA mode, this pin is address bit 17 output EM_A[17] (O/Z). When used for EMIFA (NAND), this pin is Command Latch Enable output (CLE).
PCI_TRDY/ HHWIL/ **EM_A[16]**/(ALE)	E6	I/O/Z	IPU DV_{DD33}	This pin is multiplexed between PCI, HPI, and EMIFA. For EMIFA, this pin is address bit 16 output EM_A[16] (O/Z). When used for EMIFA (NAND), this pin is Address Latch Enable output (ALE).
PCI_AD31/ DD15/ HD31/**EM_A[15]**	A8	I/O/Z	IPD DV_{DD33}	This pin is multiplexed between PCI, ATA, HPI, and EMIFA. For EMIFA, this pin is address bit 15 output EM_A[15] (O/Z). This signal is ***not*** available when ATA is enabled (i.e., EMIF NAND Flash mode).
PCI_AD30/ DD14/ HD30/**EM_A[14]**	C9	I/O/Z	IPD DV_{DD33}	This pin is multiplexed between PCI, ATA, HPI, and EMIFA. For EMIFA, this pin is address bit 14 output EM_A[14] (O/Z). This signal is ***not*** available when ATA is enabled (i.e., EMIF NAND Flash mode).
PCI_AD29/ DD13/ HD29/**EM_A[13]**	B8	I/O/Z	IPD DV_{DD33}	This pin is multiplexed between PCI, ATA, HPI, and EMIFA. For EMIFA, this pin is address bit 13 output EM_A[13] (O/Z). This signal is ***not*** available when ATA is enabled (i.e., EMIF NAND Flash mode).
PCI_AD28/ DD12/ HD28/**EM_A[12]**	D9	I/O/Z	IPD DV_{DD33}	This pin is multiplexed between PCI, ATA, HPI, and EMIFA. For EMIFA, this pin is address bit 12 output EM_A[12] (O/Z). This signal is ***not*** available when ATA is enabled (i.e., EMIF NAND Flash mode).
PCI_AD27/ DD11/ HD27/**EM_A[11]**	A6	I/O/Z	IPD DV_{DD33}	This pin is multiplexed between PCI, ATA, HPI, and EMIFA. For EMIFA, this pin is address bit 11 output EM_A[11] (O/Z). This signal is ***not*** available when ATA is enabled (i.e., EMIF NAND Flash mode).
PCI_AD26/ DD10/ HD26/**EM_A[10]**	C8	I/O/Z	IPD DV_{DD33}	This pin is multiplexed between PCI, ATA, HPI, and EMIFA. For EMIFA, this pin is address bit 10 output EM_A[10] (O/Z). This signal is ***not*** available when ATA is enabled (i.e., EMIF NAND Flash mode).

Copyright © 2007–2012, Texas Instruments Incorporated

Table 3-9. Asynchronous External Memory Interface (EMIFA) Terminal Functions (continued)

SIGNAL NAME	NO.	TYPE[1]	OTHER[2] [3]	DESCRIPTION
PCI_AD25/ DD9/ HD25/**EM_A[9]**	B6	I/O/Z	IPD DV_{DD33}	This pin is multiplexed between PCI, ATA, HPI, and EMIFA. For EMIFA, this pin is address bit 9 output EM_A[9] (O/Z). This signal is ***not*** available when ATA is enabled (i.e., EMIF NAND Flash mode).
PCI_AD24/ DD8/ HD24/**EM_A[8]**	D8	I/O/Z	IPD DV_{DD33}	This pin is multiplexed between PCI, ATA, HPI, and EMIFA. For EMIFA, this pin is address bit 8 output EM_A[8] (O/Z). This signal is ***not*** available when ATA is enabled (i.e., EMIF NAND Flash mode).
PCI_AD23/ DD7/ HD23/**EM_A[7]**	B5	I/O/Z	IPD DV_{DD33}	This pin is multiplexed between PCI, ATA, HPI, and EMIFA. For EMIFA, this pin is address bit 7 output EM_A[7] (O/Z). This signal is ***not*** available when ATA is enabled (i.e., EMIF NAND Flash mode).
PCI_AD22/ DD6/ HD22/**EM_A[6]**	C7	I/O/Z	IPD DV_{DD33}	This pin is multiplexed between PCI, ATA, HPI, and EMIFA. For EMIFA, this pin is address bit 6 output EM_A[6] (O/Z). This signal is ***not*** available when ATA is enabled (i.e., EMIF NAND Flash mode).
PCI_AD21/ DD5/ HD21/**EM_A[5]**	C5	I/O/Z	IPD DV_{DD33}	This pin is multiplexed between PCI, ATA, HPI, and EMIFA. For EMIFA, this pin is address bit 5 output EM_A[5] (O/Z). This signal is ***not*** available when ATA is enabled (i.e., EMIF NAND Flash mode).
PCI_AD20/ DD4/ HD20/**EM_A[4]**	D7	I/O/Z	IPD DV_{DD33}	This pin is multiplexed between PCI, ATA, HPI, and EMIFA. For EMIFA, this pin is address bit 4 output EM_A[4] (O/Z). This signal is ***not*** available when ATA is enabled (i.e., EMIF NAND Flash mode).
PCI_AD19/ DD3/ HD19/**EM_A[3]**	A4	I/O/Z	IPD DV_{DD33}	This pin is multiplexed between PCI, ATA, HPI, and EMIFA. For EMIFA, this pin is address bit 3 output EM_A[3] (O/Z). This signal is ***not*** available when ATA is enabled (i.e., EMIF NAND Flash mode).
PCI_AD18/ DD2/ HD18/**EM_A[2]**	E7	I/O/Z	IPD DV_{DD33}	This pin is multiplexed between PCI, ATA, HPI, and EMIFA. For EMIFA, this pin is address bit 2 output EM_A[2] (O/Z). This signal is ***not*** available when ATA is enabled (i.e., EMIF NAND Flash mode).
PCI_AD17/ DD1/ HD17/**EM_A[1]**	B4	I/O/Z	IPD DV_{DD33}	This pin is multiplexed between PCI, ATA, HPI, and EMIFA. For EMIFA, this pin is address bit 1 output EM_A[1] (O/Z). This signal is ***not*** available when ATA is enabled (i.e., EMIF NAND Flash mode).
PCI_AD16/ DD0/ HD16/**EM_A[0]**	C6	I/O/Z	IPD DV_{DD33}	This pin is multiplexed between PCI, ATA, HPI, and EMIFA. For EMIFA, this pin is address bit 0 output EM_A[0] (O/Z), which is the least significant bit on a 32-bit word address. When connected to a 16-bit asynchronous memory, this pin is the second bit of the address. For an 8-bit asynchronous memory, this pin is the third bit of the address.

Copyright © 2007–2012, Texas Instruments Incorporated

Table 3-9. Asynchronous External Memory Interface (EMIFA) Terminal Functions (continued)

SIGNAL NAME	NO.	TYPE[1]	OTHER[2] [3]	DESCRIPTION
PCI_AD15/ HD15/**EM_D15**	E5	I/O/Z	IPD DV_{DD33}	These pins are multiplexed between PCI, HPI, and EMIFA. For EMIFA mode, these pins are the 16-bit bidirectional data bus (EM_D[15:0]) [I/O/Z]. When EMIFA is configured for an 8-bit asynchronous memory, only EM_D[7:0] pins are used.
PCI_AD14/ HD14 /**EM_D14**	C1	I/O/Z	IPD DV_{DD33}	
PCI_AD13/ HD13/**EM_D13**	E4	I/O/Z	IPD DV_{DD33}	
PCI_AD12/ HD12/**EM_D12**	D3	I/O/Z	IPD DV_{DD33}	
PCI_AD11/ HD11/**EM_D11**	E3	I/O/Z	IPD DV_{DD33}	
PCI_AD10/ HD10/**EM_D10**	D2	I/O/Z	IPD DV_{DD33}	
PCI_AD9/ HD9/**EM_D9**	F5	I/O/Z	IPD DV_{DD33}	
PCI_AD8/ HD8/**EM_D8**	D1	I/O/Z	IPD DV_{DD33}	
PCI_AD7/ HD7/**EM_D7**	E2	I/O/Z	IPD DV_{DD33}	
PCI_AD6/ HD6/**EM_D6**	F3	I/O/Z	IPD DV_{DD33}	
PCI_AD5/ HD5/**EM_D5**	E1	I/O/Z	IPD DV_{DD33}	
PCI_AD4/ HD4/**EM_D4**	G5	I/O/Z	IPD DV_{DD33}	
PCI_AD3/ HD3/**EM_D3**	F2	I/O/Z	IPD DV_{DD33}	
PCI_AD2/ HD2/**EM_D2**	G4	I/O/Z	IPD DV_{DD33}	
PCI_AD1/ HD1/**EM_D1**	F1	I/O/Z	IPD DV_{DD33}	
PCI_AD0/ HD0/**EM_D0**	G3	I/O/Z	IPD DV_{DD33}	
EMIFA FUNCTIONAL PINS: NAND				
$\overline{\text{PCI_IRDY}}$/ $\overline{\text{HRDY}}$/ **EM_A[17]**/(CLE)	A3	I/O/Z	IPU DV_{DD33}	This pin is multiplexed between PCI, HPI, and EMIFA. In EMIFA mode, this pin is address bit 17 output EM_A[17] (O/Z). When used for EMIFA (NAND), this pin is Command Latch Enable output (CLE).
$\overline{\text{PCI_TRDY}}$/ HHWIL/ **EM_A[16]**/(ALE)	E6	I/O/Z	IPU DV_{DD33}	This pin is multiplexed between PCI, HPI, and EMIFA. For EMIFA, this pin is address bit 16 output EM_A[16] (O/Z). When used for EMIFA (NAND), this pin is Address Latch Enable output (ALE).
$\overline{\text{PCI_INTA}}$/ **EM_WAIT2**/ (RDY2/$\overline{\text{BSY2}}$)	C11	I/O/Z	IPU DV_{DD33}	This pin is multiplexed between PCI and EMIFA. In EMIFA mode, this pin is wait state extension input 2 EM_WAIT2 (I). When used for EMIFA (NAND), this pin is the ready/busy 2 input (RDY2/$\overline{\text{BSY2}}$).
IORDY/ GP[21]/**EM_WAIT3**/ (RDY3/$\overline{\text{BSY3}}$)	D11	I/O/Z	IPU DV_{DD33}	This pin is multiplexed between ATA, GPIO, and EMIFA. In EMIFA mode, this pin is wait state extension input 3 EM_WAIT3 (I). When used for EMIFA (NAND), this pin is the ready/busy 3 input (RDY3/$\overline{\text{BSY3}}$).
$\overline{\text{DIOW}}$/ GP[20]/**EM_WAIT4**/ (RDY4/$\overline{\text{BSY4}}$)	A11	I/O/Z	IPU DV_{DD33}	This pin is multiplexed between ATA, GPIO, and EMIFA. In EMIFA mode, this pin is wait state extension input 4 EM_WAIT4 (I). When used for EMIFA (NAND), this pin is the ready/busy 4 input (RDY4/$\overline{\text{BSY4}}$).
$\overline{\text{DIOR}}$/ GP[19]/**EM_WAIT5**/ (RDY5/$\overline{\text{BSY5}}$)	E10	I/O/Z	IPU DV_{DD33}	This pin is multiplexed between ATA, GPIO, and EMIFA. For EMIFA, this pin is wait state extension input 5 EM_WAIT5 (I). When used for EMIFA (NAND), this pin is the ready/busy 5 input (RDY5/$\overline{\text{BSY5}}$).
$\overline{\text{PCI_SERR}}$/ $\overline{\text{HDS1}}$/ **$\overline{\text{EM_OE}}$**	B2	I/O/Z	IPU DV_{DD33}	This pin is multiplexed between PCI, HPI, and EMIFA. In EMIFA mode, this pin is the output enable output $\overline{\text{EM_OE}}$ (O/Z).

Copyright © 2007–2012, Texas Instruments Incorporated

Table 3-9. Asynchronous External Memory Interface (EMIFA) Terminal Functions (continued)

SIGNAL NAME	NO.	TYPE(1)	OTHER(2) (3)	DESCRIPTION
PCI_STOP/ HCNTL0/ **EM_WE**	D5	I/O/Z	IPU DV_{DD33}	This pin is multiplexed between PCI, HPI, and EMIFA. In EMIFA mode, this pin is the write enable output EM_WE (O/Z).
PCI_CBE2/ HDS2/ **EM_CS2**	C4	I/O/Z	IPU DV_{DD33}	This pin is multiplexed between PCI, HPI, and EMIFA. In EMIFA mode, this pin is Chip Select 2 output EM_CS2 (O/Z). This is the chip select used for EMIFA boot modes. Asynchronous memories (i.e., NOR Flash) or NAND flash.
PCI_CBE3/ HR/W **EM_CS3**	A5	I/O/Z	IPU DV_{DD33}	This pin is multiplexed between PCI, HPI, and EMIFA. In EMIFA mode, this pin is Chip Select 3 output EM_CS3 (O/Z). Asynchronous memories (i.e., NOR Flash).
PCI_AD15/ HD15/**EM_D15**	E5	I/O/Z	IPD DV_{DD33}	These pins are multiplexed between PCI, HPI, and EMIFA. For EMIFA mode, these pins are the 16-bit bidirectional data bus (EM_D[15:0]) [I/O/Z]. When EMIFA is configured for an 8-bit asynchronous memory, only EM_D[7:0] pins are used.
PCI_AD14/ HD14 /**EM_D14**	C1	I/O/Z	IPD DV_{DD33}	
PCI_AD13/ HD13/**EM_D13**	E4	I/O/Z	IPD DV_{DD33}	
PCI_AD12/ HD12/**EM_D12**	D3	I/O/Z	IPD DV_{DD33}	
PCI_AD11/ HD11/**EM_D11**	E3	I/O/Z	IPD DV_{DD33}	
PCI_AD10/ HD10/**EM_D10**	D2	I/O/Z	IPD DV_{DD33}	
PCI_AD9/ HD9/**EM_D9**	F5	I/O/Z	IPD DV_{DD33}	
PCI_AD8/ HD8/**EM_D8**	D1	I/O/Z	IPD DV_{DD33}	
PCI_AD7/ HD7/**EM_D7**	E2	I/O/Z	IPD DV_{DD33}	
PCI_AD6/ HD6/**EM_D6**	F3	I/O/Z	IPD DV_{DD33}	
PCI_AD5/ HD5/**EM_D5**	E1	I/O/Z	IPD DV_{DD33}	
PCI_AD4/ HD4/**EM_D4**	G5	I/O/Z	IPD DV_{DD33}	
PCI_AD3/ HD3/**EM_D3**	F2	I/O/Z	IPD DV_{DD33}	
PCI_AD2/ HD2/**EM_D2**	G4	I/O/Z	IPD DV_{DD33}	
PCI_AD1/ HD1/**EM_D1**	F1	I/O/Z	IPD DV_{DD33}	
PCI_AD0/ HD0/**EM_D0**	G3	I/O/Z	IPD DV_{DD33}	

Copyright © 2007–2012, Texas Instruments Incorporated

3.7.6 DDR2 Memory Controller

Table 3-10. DDR2 Memory Controller Terminal Functions

SIGNAL NAME	NO.	TYPE(1)	OTHER(2) (3)	DESCRIPTION
DDR2 Memory Controller				
DDR_CLK	M23	O/Z	DV_{DDR2}	DDR2 Clock
$\overline{\text{DDR_CLK}}$	L23	O/Z	DV_{DDR2}	DDR2 Differential clock
DDR_CKE	M20	O/Z	DV_{DDR2}	DDR2 Clock Enable
$\overline{\text{DDR_CS}}$	J20	O/Z	DV_{DDR2}	DDR2 Active low chip select
$\overline{\text{DDR_WE}}$	L20	O/Z	DV_{DDR2}	DDR2 Active low Write enable
$\overline{\text{DDR_RAS}}$	K19	O/Z	DV_{DDR2}	DDR2 Row Access Signal output
$\overline{\text{DDR_CAS}}$	L21	O/Z	DV_{DDR2}	DDR2 Column Access Signal output
DDR_DQM[3]	V20	O/Z	DV_{DDR2}	DDR2 Data mask outputs DDR_DQM[3]: For upper byte data bus DDR_D[31:24] DDR_DQM[2]: For DDR_D[23:16] DDR_DQM[1]: For DDR_D[15:8] DDR_DQM[0]: For lower byte DDR_D[7:0]
DDR_DQM[2]	Y23	O/Z	DV_{DDR2}	
DDR_DQM[1]	F22	O/Z	DV_{DDR2}	
DDR_DQM[0]	F20	O/Z	DV_{DDR2}	
DDR_DQS[3]	U20	I/O/Z	DV_{DDR2}	Data strobe input/outputs for each byte of the 32-bit data bus. They are outputs to the DDR2 memory when writing and inputs when reading. They are used to synchronize the data transfers. DDR_DQS[3] : For upper byte DDR_D[31:24] DDR_DQS[2]: For DDR_D[23:16] DDR_DQS[1]: For DDR_D[15:8] DDR_DQS[0]: For bottom byte DDR_D[7:0]
DDR_DQS[2]	V22	I/O/Z	DV_{DDR2}	
DDR_DQS[1]	D22	I/O/Z	DV_{DDR2}	
DDR_DQS[0]	D21	I/O/Z	DV_{DDR2}	
$\overline{\text{DDR_DQS[3]}}$	V21	I/O/Z	DV_{DDR2}	Complimentary data strobe input/outputs for each byte of the 32-bit data bus. They are outputs to the DDR2 memory when writing and inputs when reading. They are used to synchronize the data transfers. $\overline{\text{DDR_DQS[3]}}$: For upper byte DDR_D[31:24] $\overline{\text{DDR_DQS[2]}}$: For DDR_D[23:16] $\overline{\text{DDR_DQS[1]}}$: For DDR_D[15:8] DDR_DQS[0]: For bottom byte DDR_D[7:0]
$\overline{\text{DDR_DQS[2]}}$	W23	I/O/Z	DV_{DDR2}	
$\overline{\text{DDR_DQS[1]}}$	D23	I/O/Z	DV_{DDR2}	
$\overline{\text{DDR_DQS[0]}}$	E20	I/O/Z	DV_{DDR2}	
DDR_ODT0	K20	O/Z	DV_{DDR2}	DDR2 on-die termination control
DDR_BA[2]	P19	O/Z	DV_{DDR2}	Bank address outputs (BA[2:0]).
DDR_BA[1]	M21			
DDR_BA[0]	N19			
DDR_A[14]	N23	O/Z	DV_{DDR2}	DDR2 address bus
DDR_A[13]	H21			
DDR_A[12]	P20			
DDR_A[11]	K23			
DDR_A[10]	T23			
DDR_A[9]	N22			
DDR_A[8]	J23			
DDR_A[7]	N20			
DDR_A[6]	M22			
DDR_A[5]	N21			
DDR_A[4]	J22			
DDR_A[3]	R22			
DDR_A[2]	L22			
DDR_A[1]	R23			
DDR_A[0]	H23			

(1) I = Input, O = Output, Z = High impedance, S = Supply voltage, GND = Ground, A = Analog signal
(2) Specifies the operating I/O supply voltage for each signal
(3) For more information, see the *Recommended Operating Conditions* table

Copyright © 2007–2012, Texas Instruments Incorporated

Table 3-10. DDR2 Memory Controller Terminal Functions (continued)

SIGNAL NAME	SIGNAL NO.	TYPE[1]	OTHER[2] [3]	DESCRIPTION
DDR_D[31]	Y20	I/O/Z	DV_{DDR2}	DDR2 data bus can be configured as 32 bits wide or 16 bits wide.
DDR_D[30]	W20			
DDR_D[29]	Y21			
DDR_D[28]	AA21			
DDR_D[27]	U21			
DDR_D[26]	T21			
DDR_D[25]	R20			
DDR_D[24]	T20			
DDR_D[23]	AB22			
DDR_D[22]	Y22			
DDR_D[21]	AA22			
DDR_D[20]	AA23			
DDR_D[19]	V23			
DDR_D[18]	U23			
DDR_D[17]	T22			
DDR_D[16]	U22			
DDR_D[15]	H22			
DDR_D[14]	G23			
DDR_D[13]	G22			
DDR_D[12]	F23			
DDR_D[11]	E23			
DDR_D[10]	C22			
DDR_D[9]	B22			
DDR_D[8]	C23			
DDR_D[7]	H20			
DDR_D[6]	G21			
DDR_D[5]	F21			
DDR_D[4]	G20			
DDR_D[3]	B21			
DDR_D[2]	C20			
DDR_D[1]	D20			
DDR_D[0]	C21			
DDR_DQGATE0	J19	O/Z	DV_{DDR2}	DDR2 strobe gate signal for lower-half data bus
DDR_DQGATE1	J21	I	DV_{DDR2}	DDR2 strobe gate signal return for lower-half data bus
DDR_DQGATE2	R19	O/Z	DV_{DDR2}	DDR2 strobe gate signal for upper-half data bus
DDR_DQGATE3	R21	I	DV_{DDR2}	DDR2 strobe gate signal return for upper-half data bus
DDR_VREF	P23	S	(4)	Reference voltage input for the SSTL_18 IO buffers.
DDR_ZP	L19	O	(4)	Impedance control for DDR2 outputs. This must be connected via a 50-Ω (±5% tolerance) resistor to V_{SS}.
DDR_ZN	M19	O	(4)	Impedance control for DDR2 outputs. This must be connected via a 50-Ω (±5% tolerance) resistor to DV_{DDR2}.

(4) For more information, see the *Recommended Operating Conditions* table

Copyright © 2007–2012, Texas Instruments Incorporated

3.7.7 Peripheral Component Interconnect (PCI)

Table 3-11. Peripheral Component Interconnect (PCI) Terminal Functions

SIGNAL NAME	NO.	TYPE(1)	OTHER(2) (3)	DESCRIPTION
PCI				
Note: When PCI boot mode is ***not*** used, for proper device operation out of reset PCIEN ***must*** be "0". The PCI pin functions are enabled when PCIEN = 1 (PCI mode). This can be done via an external PU on the PCIEN pin (AC6) or by setting the PCIEN bit (bit 2) in the PINMUX0 register to a "1" after device reset. For more details on the PCIEN pin, see Table 3-5, *Boot Terminal Functions*. In PCI mode (PCIEN = 1), the internal pullups/pulldowns (IPUs/IPDs) are disabled on all PCI pins and it is recommended to have external pullup resistors on the PCI_RSV[5:0] pins. For more detailed information on external pullup/pulldown resistors, see Section 4.8.1, *Pullup/Pulldown Resistors*. Also in PCI mode (PCIEN = 1), the internal pulldowns (IPDs) are disabled on the GP[5:7] pins. It is recommended to have external pullup resistors on the GP[5] pin when PCIEN = 1 and on GP[6:7] pins when PCIEN = 1 *and* VADJEN = 0.				
PCI_CLK/GP[10]	A10	I/O/Z	[IPU] DV_{DD33}	This pin is multiplexed between PCI and GPIO. In PCI mode, this pin is the PCI clock input PCI_CLK (I).
PCI_RST /DA2/ GP[13]/EM_A[22]	C10	I/O/Z	[IPD] DV_{DD33}	This pin is multiplexed between the PCI, ATA, GPIO, and EMIFA. In PCI mode, this pin is PCI reset PCI_RST (I).
PCI_IDSEL/ HDDIR/EM_R/W	E8	I/O/Z	[IPU] DV_{DD33}	This pin is multiplexed between PCI, ATA, and EMIFA. In PCI mode, this pin is the PCI initialization device select, PCI_IDSEL (I).
PCI_DEVSEL / HCNTL1/EM_BA[1]	B3	I/O/Z	[IPU] DV_{DD33}	This pin is multiplexed between PCI, HPI, and EMIFA. In PCI mode, this pin is the PCI device select, PCI_DEVSEL (I/O/Z).
PCI_FRAME / HINT/EM_BA[0]	D6	I/O/Z	[IPU] DV_{DD33}	This pin is multiplexed between PCI, HPI, and EMIFA. In PCI mode, this pin is the PCI cycle frame, PCI_FRAME (I/O/Z).
PCI_IRDY /HRDY/ EM_A[17]/(CLE)	A3	I/O/Z	[IPU] DV_{DD33}	This pin is multiplexed between PCI, HPI, and EMIFA. In PCI mode, this pin is the PCI initiator ready, PCI_IRDY (I/O/Z).
PCI_ TRDY /HHWIL/ EM_A[16]/(ALE)	E6	I/O/Z	IPU DV_{DD33}	This pin is multiplexed between PCI, HPI, and EMIFA. In PCI mode, this pin is the PCI target ready, PCI_ TRDY (I/O/Z).
PCI_STOP / HCNTL0/EM_WE	D5	I/O/Z	[IPU] DV_{DD33}	This pin is multiplexed between PCI, HPI, and EMIFA. In PCI mode, this pin is the PCI stop, PCI_STOP (I/O/Z).
PCI_SERR / HDS1/EM_OE	B2	I/O/Z	[IPU] DV_{DD33}	This pin is multiplexed between PCI, HPI, and EMIFA. In PCI mode, this pin is the PCI system error, PCI_SERR (I/O/Z).
PCI_PERR / HCS/EM_DQM1	C3	I/O/Z	[IPU] DV_{DD33}	This pin is multiplexed between PCI, HPI, and EMIFA. In PCI mode, this pin is the PCI parity error, PCI_PERR (I/O/Z).
PCI_PAR/ HAS/EM_DQM0	D4	I/O/Z	[IPU] DV_{DD33}	This pin is multiplexed between PCI, HPI, and EMIFA. In PCI mode, this pin is the PCI parity, PCI_PAR (I/O/Z).
PCI_INTA / EM_WAIT2/ (RDY2/BSY2)	C11	I/O/Z	[IPU] DV_{DD33}	This pin is multiplexed between the PCI and EMIFA. In PCI mode, this pin is the PCI interrupt A, PCI_INTA (O/Z).
PCI_REQ / DMARQ/ GP[11]/EM_CS5	B9	I/O/Z	[IPU] DV_{DD33}	This pin is multiplexed between the PCI, ATA, GPIO, and EMIFA. In PCI mode, this pin is the PCI bus request, PCI_REQ (O/Z).
PCI_GNT / DMACK/ GP[12]/EM_CS4	D10	I/O/Z	[IPU] DV_{DD33}	This pin is multiplexed between the PCI, ATA, GPIO, and EMIFA. In PCI mode, this pin is PCI bus grant, PCI_GNT (I).
PCI_CBE3 / HR/W/EM_CS3	A5	I/O/Z	[IPU] DV_{DD33}	This pin is multiplexed between PCI, HPI, and EMIFA. In PCI mode, this pin is the PCI command/byte enable 3, PCI_CBE3 (I/O/Z).
PCI_CBE2 / HDS2/EM_CS2	C4	I/O/Z	[IPU] DV_{DD33}	This pin is multiplexed between PCI, HPI, and EMIFA. In PCI mode, this pin is the PCI command/byte enable 2, PCI_CBE2 (I/O/Z).

(1) I = Input, O = Output, Z = High impedance, S = Supply voltage, GND = Ground, A = Analog signal
(2) IPD = Internal pulldown, IPU = Internal pullup. For more detailed information on pullup/pulldown resistors and situations where external pullup/pulldown resistors are required, see Section 4.8.1, *Pullup/Pulldown Resistors*.
(3) Specifies the operating I/O supply voltage for each signal

Copyright © 2007–2012, Texas Instruments Incorporated

Table 3-11. Peripheral Component Interconnect (PCI) Terminal Functions (continued)

SIGNAL NAME	NO.	TYPE(1)	OTHER(2) (3)	DESCRIPTION
$\overline{\text{PCI_CBE1}}$ / $\overline{\text{ATA_CS1}}$/ GP[32]/EM_A[19]	C2	I/O/Z	[IPU] DV_{DD33}	This pin is multiplexed between PCI, ATA, GPIO, and EMIFA. In PCI mode, this pin is the PCI command/byte enable 1 $\overline{\text{PCI_CBE1}}$ (I/O/Z).
$\overline{\text{PCI_CBE0}}$ / $\overline{\text{ATA_CS0}}$/ GP[33]/EM_A[18]	F4	I/O/Z	[IPU] DV_{DD33}	This pin is multiplexed between PCI, ATA, GPIO, and EMIFA. In PCI mode, this pin is the PCI command/byte enable 0 $\overline{\text{PCI_CBE0}}$ (I/O/Z).

Copyright © 2007–2012, Texas Instruments Incorporated

Table 3-11. Peripheral Component Interconnect (PCI) Terminal Functions (continued)

SIGNAL NAME	NO.	TYPE(1)	OTHER(2) (3)	DESCRIPTION
PCI_AD31/DD15/ HD31/EM_A[15]	A8	I/O/Z	[IPD] DV_{DD33}	These pins are multiplexed between PCI, ATA, HPI, and EMIFA. In PCI mode, these pins are the PCI address/data bus, PCI_AD[31:16] (I/O/Z).
PCI_AD30/DD14/ HD30/EM_A[14]	C9	I/O/Z	[IPD] DV_{DD33}	
PCI_AD29/DD13/ HD29/EM_A[13]	B8	I/O/Z	[IPD] DV_{DD33}	
PCI_AD28/DD12/ HD28/EM_A[12]	D9	I/O/Z	[IPD] DV_{DD33}	
PCI_AD27/DD11/ HD27/EM_A[11]	A6	I/O/Z	[IPD] DV_{DD33}	
PCI_AD26/DD10/ HD26/EM_A[10]	C8	I/O/Z	[IPD] DV_{DD33}	
PCI_AD25/DD9/ HD25/EM_A[9]	B6	I/O/Z	[IPD] DV_{DD33}	
PCI_AD24/DD8/ HD24/EM_A[8]	D8	I/O/Z	[IPD] DV_{DD33}	
PCI_AD23/DD7/ HD23/EM_A[7]	B5	I/O/Z	[IPD] DV_{DD33}	
PCI_AD22/DD6/ HD22/EM_A[6]	C7	I/O/Z	[IPD] DV_{DD33}	
PCI_AD21/DD5/ HD21/EM_A[5]	C5	I/O/Z	[IPD] DV_{DD33}	
PCI_AD20/DD4/ HD20/EM_A[4]	D7	I/O/Z	[IPD] DV_{DD33}	
PCI_AD19/DD3/ HD19/EM_A[3]	A4	I/O/Z	[IPD] DV_{DD33}	
PCI_AD18/DD2/ HD18/EM_A[2]	E7	I/O/Z	[IPU] DV_{DD33}	
PCI_AD17/DD1/ HD17/EM_A[1]	B4	I/O/Z	[IPD] DV_{DD33}	
PCI_AD16/DD0/ HD16/EM_A[0]	C6	I/O/Z	[IPD] DV_{DD33}	
PCI_AD15/ HD15/EM_D15	E5	I/O/Z	[IPD] DV_{DD33}	These pins are multiplexed between PCI, HPI, and EMIFA. For PCI, these pins are PCI data/address bus, PCI_AD [15:0] (I/O/Z).
PCI_AD14/ HD14/EM_D14	C1	I/O/Z	[IPD] DV_{DD33}	
PCI_AD13/ HD13/EM_D13	E4	I/O/Z	[IPD] DV_{DD33}	
PCI_AD12/ HD12/EM_D12	D3	I/O/Z	[IPD] DV_{DD33}	
PCI_AD11/ HD11/EM_D11	E3	I/O/Z	[IPD] DV_{DD33}	
PCI_AD10/ HD10/EM_D10	D2	I/O/Z	[IPD] DV_{DD33}	
PCI_AD9/ HD9/EM_D9	F5	I/O/Z	[IPU] DV_{DD33}	
PCI_AD8/ HD8/EM_D8	D1	I/O/Z	[IPD] DV_{DD33}	

Copyright © 2007–2012, Texas Instruments Incorporated

Table 3-11. Peripheral Component Interconnect (PCI) Terminal Functions (continued)

SIGNAL NAME	NO.	TYPE(1)	OTHER(2) (3)	DESCRIPTION
PCI_AD7/ HD7/EM_D7	E2	I/O/Z	[IPD] DV_{DD33}	These pins are multiplexed between PCI, HPI, and EMIFA. For PCI, these pins are PCI data/address bus [15:0] (I/O/Z)
PCI_AD6/ HD6/EM_D6	F3	I/O/Z	[IPD] DV_{DD33}	
PCI_AD5/ HD5/EM_D5	E1	I/O/Z	[IPD] DV_{DD33}	
PCI_AD4/ HD4/EM_D4	G5	I/O/Z	[IPD] DV_{DD33}	
PCI_AD3/ HD3/EM_D3	F2	I/O/Z	[IPD] DV_{DD33}	
PCI_AD2/ HD2/EM_D2	G4	I/O/Z	[IPD] DV_{DD33}	
PCI_AD1/ HD1/EM_D1	F1	I/O/Z	[IPD] DV_{DD33}	
PCI_AD0/ HD0/EM_D0	G3	I/O/Z	[IPD] DV_{DD33}	
PCI_RSV0/DA1/ GP[16]/EM_A[21]	A9	I/O/Z	[IPD] DV_{DD33}	PCI reserved for future enhancements (I)(1)
PCI_RSV1/DA0/ GP[17]/EM_A[20]	E9	I/O/Z	[IPD] DV_{DD33}	PCI reserved for future enhancements (O/Z)(1)
PCI_RSV2/INTRQ/ GP[18]/EM_RSV 0	B10	I/O/Z	[IPD] DV_{DD33}	PCI reserved for future enhancements (I)(1)
PCI_RSV3/$\overline{\text{DIOR}}$/ GP[19]/ EM_WAIT5	E10	I/O/Z	[IPU] DV_{DD33}	PCI reserved for future enhancements (O/Z)(1)
PCI_RSV4/$\overline{\text{DIOW}}$/ GP[20]/ EM_WAIT4	A11	I/O/Z	[IPU] DV_{DD33}	PCI reserved for future enhancements (I/O/Z)(1)
PCI_RSV5/IORDY/ GP[21]/ EM_WAIT3	D11	I/O/Z	[IPU] DV_{DD33}	PCI reserved for future enhancements (I/O/Z)(1)

(1) In PCI mode (PCIEN = 1), it is recommended to have an external pullup resistor on this pin.

Copyright © 2007–2012, Texas Instruments Incorporated

3.7.8 EMAC [G]MII and MDIO

Table 3-12. EMAC [G]MII and MDIO Terminal Functions

SIGNAL NAME	NO.	TYPE(1)	OTHER(2) (3)	DESCRIPTION
EMAC [G]MII				
RFTCLK	H1	I	IPD DV_{DD33}	Gigabit (GMII) reference transmit clock (125 MHz)
GMTCLK	P2	O/Z	- DV_{DD33}	GMII source asynchronous transmit clock
MTCLK	R1	I	IPD DV_{DD33}	[G]MII transmit clock input
MTXD7	P1	O/Z	- DV_{DD33}	[G]MII transmit data [7:0]. For 1000 GMII operation, MTXD[7:0] are used. For 10/100 MII operation, *only* MTXD[3:0] are used.
MTXD6	N4			
MTXD5	N3			
MTXD4	N2			
MTXD3	N1			
MTXD2	M4			
MTXD1	M1			
MTXD0	L1			
MTXEN	L2	O/Z	- DV_{DD33}	[G]MII transmit data enable output
MCOL	L4	I	IPD DV_{DD33}	[G]MII collision detect (sense) input
MCRS	L3	I	IPD DV_{DD33}	[G]MII carrier sense input
MRCLK	K1	I	IPU DV_{DD33}	[G]MII receive clock
MRXD7	K2	I	IPU DV_{DD33}	[G]MII receive data [7:0]. For 1000 GMII operation, MRXD[7:0] are used. For 10/100 MII operation, *only* MRXD[3:0] are used.
MRXD6	K3			
MRXD5	K4			
MRXD4	J1			
MRXD3	J2			
MRXD2	J3			
MRXD1	H2			
MRXD0	G2			
MRXDV	J4	I	IPU DV_{DD33}	[G]MII receive data valid input
MRXER	H3	I	IPU DV_{DD33}	[G]MII receive data error input
MDIO				
MDCLK	G1	O/Z	IPU DV_{DD33}	Management data serial clock output
MDIO	H4	I/O/Z	IPU DV_{DD33}	Management Data IO

(1) I = Input, O = Output, Z = High impedance, S = Supply voltage, GND = Ground, A = Analog signal
(2) IPD = Internal pulldown, IPU = Internal pullup. For more detailed information on pullup/pulldown resistors and situations where external pullup/pulldown resistors are required, see Section 4.8.1, *Pullup/Pulldown Resistors*.
(3) Specifies the operating I/O supply voltage for each signal

Copyright © 2007–2012, Texas Instruments Incorporated

3.7.9 VLYNQ

Table 3-13. VLYNQ Terminal Functions

SIGNAL NAME	NO.	TYPE(1)	OTHER(2) (3)	DESCRIPTION
VLYNQ				
VLYNQ_CLOCK	U1	I/O/Z	IPU DV_{DD33}	VLYNQ serial clock
$\overline{\text{VLYNQ_SCRUN}}$	U2	I/O/Z	IPU DV_{DD33}	VLYNQ serial clock run request
VLYNQ_TXD3	T3	O/Z	– DV_{DD33}	VLYNQ transmit bus [3:0]
VLYNQ_TXD2	T2			
VLYNQ_TXD1	T1			
VLYNQ_TXD0	R4			
VLYNQ_RXD3	R3	I	IPD DV_{DD33}	VLYNQ receive bus [3:0]
VLYNQ_RXD2	R2			
VLYNQ_RXD1	P3			
VLYNQ_RXD0	P4			

(1) I = Input, O = Output, Z = High impedance, S = Supply voltage, GND = Ground, A = Analog signal
(2) IPD = Internal pulldown, IPU = Internal pullup. For more detailed information on pullup/pulldown resistors and situations where external pullup/pulldown resistors are required, see Section 4.8.1, *Pullup/Pulldown Resistors*.
(3) Specifies the operating I/O supply voltage for each signal

Copyright © 2007–2012, Texas Instruments Incorporated

3.7.10 Host-Port Interface (HPI)

Table 3-14. HPI Terminal Functions

SIGNAL NAME	NO.	TYPE(1)	OTHER(2) (3)	DESCRIPTION
Host-Port Interface (HPI)				
HPI is enabled by the PINMUX0.HPIEN =1 (*and* PCIEN = 0 *and* ATAEN dependent for 16-/32-bit modes). For more detailed information on the HPI pin muxing, see Section 4.7.3.1, *PCI, HPI, EMIFA, and ATA Pin Muxing*.				
PCI_PERR/ **HCS** / EM_DQM1	C3	I/O/Z	IPU DV_{DD33}	This pin is multiplexed between PCI, HPI, and EMIFA. In HPI mode, this pin is the HPI active-low chip select input, HCS (I).
PCI_STOP/ **HCNTL0**/ EM_WE	D5	I/O/Z	IPU DV_{DD33}	This pin is multiplexed between PCI, HPI, and EMIFA. In HPI mode, this pin is the HPI control input 0, HCNTL0 (I)
PCI_DEVSEL/ **HCNTL1**/ EM_BA[1]	B3	I/O/Z	IPU DV_{DD33}	This pin is multiplexed between PCI, HPI, and EMIFA. In HPI mode, this pin is the HPI control input 1, HCNTL1 (I).
PCI_PAR/ **HAS** / EM_DQM0	D4	I/O/Z	IPU DV_{DD33}	This pin is multiplexed between PCI, HPI, and EMIFA. In HPI mode, this pin is the HPI address strobe, HAS (I). **NOTE:** The DM6467 HPI ***does not*** support the HAS feature. For proper HPI operation if the pin is routed out, it ***must*** be pulled up via an external resistor.
PCI_SERR/ **HDS1** /EM_OE	B2	I/O/Z	IPU DV_{DD33}	This pin is multiplexed between PCI, HPI, and EMIFA. In HPI mode, this pin is the HPI data strobe input 1, HDS1 (I).
PCI_CBE2/ **HDS2** /EM_CS2	C4	I/O/Z	IPU DV_{DD33}	This pin is multiplexed between PCI, HPI, and EMIFA. In HPI mode, this pin is the HPI data strobe input 2, HDS2 (I).
PCI_CBE3/ **HR/W** /EM_CS3	A5	I/O/Z	IPU DV_{DD33}	This pin is multiplexed between PCI, HPI, and EMIFA. In HPI mode, this pin is the HPI host read/write select input, HR/W (I).
PCI_TRDY/ **HHWIL**/ EM_A[16]/(ALE)	E6	I/O/Z	IPU DV_{DD33}	This pin is multiplexed between PCI, HPI, and EMIFA. In HPI mode, this pin is the HPI half-word identification input control, HHWIL (I).
PCI_AD31/ DD15/ **HD31**/EM_A[15]	A8	I/O/Z	IPD DV_{DD33}	These pins are multiplexed between PCI, ATA, HPI, and EMIFA. In HPI-32 mode, these pins are the HPI upper data bus, HD[31:16] (I/O/Z). In HPI-16 mode, the HD[31:16] pins are ***not*** used by the HPI .
PCI_AD30/ DD14/ **HD30**/EM_A[14]	C9			
PCI_AD29/ DD13/ **HD29**/EM_A[13]	B8			
PCI_AD28/ DD12/ **HD28**/EM_A[12]	D9			
PCI_AD27/ DD11/ **HD27**/EM_A[11]	A6			
PCI_AD26/ DD10/ **HD26**/ EM_A[10]	C8			
PCI_AD25/ DD9/ **HD25**/EM_A[9]	B6			
PCI_AD24/ DD8/ **HD24**/EM_A[8]	D8			

(1) IPD = Internal pulldown, IPU = Internal pullup. For more detailed information on pullup/pulldown resistors and situations where external pullup/pulldown resistors are required, see Section 4.8.1, *Pullup/Pulldown Resistors*.
(2) I = Input, O = Output, Z = High impedance, S = Supply voltage, GND = Ground, A = Analog signal
(3) Specifies the operating I/O supply voltage for each signal

Copyright © 2007–2012, Texas Instruments Incorporated

Table 3-14. HPI Terminal Functions (continued)

SIGNAL NAME	NO.	TYPE(1)	OTHER(2) (3)	DESCRIPTION
PCI_AD23/ DD7/ **HD23**/EM_A[7]	B5	I/O/Z	IPD DV_{DD33}	These pins are multiplexed between PCI, ATA, HPI, and EMIFA. In HPI-32 mode, these pins are the HPI upper data bus, HD[31:16] (I/O/Z). In HPI-16 mode, the HD[31:16] pins are ***not*** used by the HPI .
PCI_AD22/ DD6/ **HD22**/EM_A[6]	C7			
PCI_AD21/ DD5/ **HD21**/EM_A[5]	C5			
PCI_AD20/ DD4/ **HD20**/EM_A[4]	D7			
PCI_AD19/ DD3/ **HD19**/EM_A[3]	A4			
PCI_AD18/ DD2/ **HD18**/EM_A[2]	E7			
PCI_AD17/ DD1/ **HD17**/EM_A[1]	B4			
PCI_AD16/ DD0/ **HD16**/EM_A[0]	C6			
PCI_AD15/ **HD15**/EM_D15	E5	I/O/Z	IPD DV_{DD33}	These pins are multiplexed between PCI, HPI, and EMIFA. In HPI-16 mode, these pins are the HPI data bus, HD[15:0] (I/O/Z). In HPI-32 mode, these pins are the HPI lower data bus, HD[15:0] (I/O/Z).
PCI_AD14/ **HD14**/EM_D14	C1			
PCI_AD13/ **HD13**/EM_D13	E4			
PCI_AD12/ **HD12**/EM_D12	D3			
PCI_AD11/ **HD11**/EM_D11	E3			
PCI_AD10/ **HD10**/EM_D10	D2			
PCI_AD9/ **HD9**/EM_D9	F5			
PCI_AD8/ **HD8**/EM_D8	D1			
PCI_AD7/ **HD7**/EM_D7	E2	I/O/Z	IPD DV_{DD33}	These pins are multiplexed between PCI, HPI, and EMIFA. In HPI-16 mode, these pins are the HPI data bus, HD[15:0] (I/O/Z). In HPI-32 mode, these pins are the HPI lower data bus, HD[15:0] (I/O/Z).
PCI_AD6/ **HD6**/EM_D6	F3			
PCI_AD5/ **HD5**/EM_D5	E1			
PCI_AD4/ **HD4**/EM_D4	G5			
PCI_AD3/ **HD3**/EM_D3	F2			
PCI_AD2/ **HD2**/EM_D2	G4			
PCI_AD1/ **HD1**/EM_D1	F1			
PCI_AD0/ **HD0**/EM_D0	G3			

Copyright © 2007–2012, Texas Instruments Incorporated

Table 3-14. HPI Terminal Functions (continued)

SIGNAL NAME	NO.	TYPE[1]	OTHER[2] [3]	DESCRIPTION
PCI_IRDY/ **HRDY** / EM_A[17]/(CLE)	A3	I/O/Z	IPU DV_{DD33}	This pin is multiplexed between PCI, HPI, and EMIFA. In HPI mode, this pin is the HPI host ready output from DSP to host, HRDY (O/Z).
PCI_FRAME/ **HINT** /EM_BA[0]	D6	I/O/Z	IPU DV_{DD33}	This pin is multiplexed between PCI, HPI, and EMIFA. In HPI mode, this pin is the HPI host interrupt output, HINT (O/Z).

Copyright © 2007–2012, Texas Instruments Incorporated

3.7.11 USB

Table 3-15. USB Terminal Functions

SIGNAL NAME	NO.	TYPE(1)	OTHER(2) (3) (4)	DESCRIPTION
USB 2.0				
USB_DP	A19	A I/O		USB bidirectional Data Differential signal pair [positive/negative]. When the USB peripheral ***is not*** used, the USB_DP signal should be pulled up (high) and the USB_DN signal should be pulled down (low) via a 10-kΩ resistor.
USB_DN	A20	A I/O		
USB_R1	D18	A I/O	(4)	USB current reference output. When the USB peripheral is used, this pin must be connected via a 10-kΩ ±1% resistor to USB_V_{SSREF}. When the USB peripheral is ***not*** used, this pin must be connected via a 10-kΩ resistor to USB_V_{SSREF}.
USB_DRVVBUS/ GP[22]	B18	I/O/Z	IPD DV_{DD33}	This pin is multiplexed between USB and GPIO. When this pin is used as USB_DRVVBUS (PINMUX0.VBUSDIS = 0), and the USB Controller is operating as a Host (USBCTL.USBID = 0 *and* Session is in progress), this signal is used by the USB Controler to enable the external VBUS charge pump.
USB_V_{SSREF}	C18	GND	(4)	Ground for reference current. This pin must be connected via a 10-kΩ ±1% resistor to USB_R1. When the USB peripheral ***is not*** used, the USB_V_{SSREF} signal should be connected to V_{SS}.
USB_V_{DDA3P3}	F18	S	(4)	Analog 3.3 V power supply for USB PHY. When the USB peripheral ***is not*** used, the USB_V_{DDA3P3} signal should be connected to DV_{DD33}.
USB_V_{DD1P8}	E18	S	(4)	1.8-V I/O power supply for USB PHY. When the USB peripheral ***is not*** used, the USB_V_{DD1P8} signal should be connected to 1.8-V power supply.
$USB_V_{DDA1P2LDO}$	E17	S	(4)	Core power supply LDO output for USB PHY. This pin must be connected via a 1-µF capacitor to V_{SS}. When the USB peripheral ***is not*** used, the $USB_V_{DDA1P2LDO}$ signal should still be connected via a 1-µF capacitor to V_{SS}.

(1) I = Input, O = Output, Z = High impedance, S = Supply voltage, GND = Ground, A = Analog signal
(2) IPD = Internal pulldown, IPU = Internal pullup. For more detailed information on pullup/pulldown resistors and situations where external pullup/pulldown resistors are required, see Section 4.8.1, *Pullup/Pulldown Resistors*.
(3) Specifies the operating I/O supply voltage for each signal
(4) For more information, see the *Recommended Operating Conditions* table

Copyright © 2007–2012, Texas Instruments Incorporated

3.7.12 Video-Port Interface (VPIF)

Table 3-16. Video-Port Interface (VPIF) Terminal Functions

SIGNAL NAME	NO.	TYPE(1)	OTHER(2) (3)	DESCRIPTION
VIDEO-PORT INTERFACE (VPIF) – CAPTURE				
VP_CLKIN0	AC13	I	IPD DV_{DD33}	VPIF capture channel 0 input clock (I).
VP_CLKIN1	AB18	I	IPD DV_{DD33}	VPIF capture channel 1 input clock (I).
VP_DIN15_VP_VSYNC/ TS0_DIN7	AC18	I	IPD DV_{DD33}	This pin is multiplexed between the VPIF and TSIF0. When used for the VPIF, this pin is capture data bit 15 *or* the vertical sync input, VP_DIN15_VSYNC (I).
VP_DIN14_VP_HSYNC/ TS0_DIN6	AA17	I	IPD DV_{DD33}	This pin is multiplexed between the VPIF and TSIF0. When used for the VPIF, this pin is capture data bit 14 *or* the horizontal sync input, VP_DIN14_HSYNC (I).
VP_DIN13_FIELD/ TS0_DIN5	AB17	I	IPD DV_{DD33}	This pin is multiplexed between the VPIF and TSIF0. When used for the VPIF, this pin is capture data bit 13 *or* the field indicator input, VP_DIN13_FIELD (I).
VP_DIN12/ TS0_DIN4	AC17	I	IPD DV_{DD33}	These pins are multiplexed between the VPIF and TSIF0. When used for the VPIF, these pins are capture data bits, VP_DIN[12:8] (I).
VP_DIN11/ TS0_DIN3	Y16			
VP_DIN10/ TS0_DIN2	AA16			
VP_DIN9/ TS0_DIN1	AB16			
VP_DIN8/ TS0_DIN0	AC16			
VP_DIN7/ TS0_DOUT7/ TS1_DIN	Y14	I/O/Z	IPD DV_{DD33}	These pins are multiplexed between the VPIF, TSIF0, and TSIF1. When used for the VPIF, these pins are capture data bits, VP_DIN[7:4] (I).
VP_DIN6/ TS0_DOUT6/ TS1_PSTIN	AA14			
VP_DIN5/ TS0_DOUT5/ TS1_EN_WAITO	AB14			
VP_DIN4/ TS0_DOUT4/ TS1_WAITO	AC14			
VP_DIN3/ TS0_DOUT3	Y15	I/O/Z	IPD DV_{DD33}	These pins are multiplexed between the VPIF and TSIF0. When used for the VPIF, these pins are capture data bits, VP_DIN[3:0] (I).
VP_DIN2/ TS0_DOUT2	AA15			
VP_DIN1/ TS0_DOUT1	AB15			
VP_DIN0/ TS0_DOUT0	AC15			
VIDEO-PORT INTERFACE (VPIF) – DISPLAY				
VP_CLKIN2	Y10	I	IPD DV_{DD33}	VPIF display channel 2 source input clock (I).
VP_CLKIN3/ TS1_CLKO	AC9	I/O/Z	IPD DV_{DD33}	This pin is multiplexed between the VPIF and TSIF1. When used for VPIF, this pin is display channel 3 source clock, VP_CLKIN3 (I).

(1) I = Input, O = Output, Z = High impedance, S = Supply voltage, GND = Ground, A = Analog signal
(2) IPD = Internal pulldown, IPU = Internal pullup. For more detailed information on pullup/pulldown resistors and situations where external pullup/pulldown resistors are required, see Section 4.8.1, *Pullup/Pulldown Resistors*.
(3) Specifies the operating I/O supply voltage for each signal

Copyright © 2007–2012, Texas Instruments Incorporated

Table 3-16. Video-Port Interface (VPIF) Terminal Functions (continued)

SIGNAL NAME	NO.	TYPE(1)	OTHER(2) (3)	DESCRIPTION
VP_CLKO2	AA9	O/Z	- DV_{DD33}	VPIF display channel 2 output clock (O/Z).
VP_CLKO3/ TS0_CLKO	AC10	O/Z	- DV_{DD33}	This pin is multiplexed between the VPIF and TSIF0. When used for VPIF, this pin is the display channel 3 output clock, VP_CLKO3 (O/Z).
VP_DOUT15/ TS1_DIN	AB8	I/O/Z	IPD DV_{DD33}	These pins are multiplexed between the VPIF and TSIF1. When used for the VPIF, these pins are display data bits, VP_DOUT[15:8] (O/Z).
VP_DOUT14/ TS1_PSTIN	AC7	I/O/Z		
VP_DOUT13/ TS1_EN_WAITO	Y9	I/O/Z		
VP_DOUT12/ TS1_WAITO	AA8	I/O/Z		
VP_DOUT11/ TS1_DOUT	AB10	O/Z		
VP_DOUT10/ TS1_PSTO	AA10	O/Z		
VP_DOUT9/ TS1_ENAO	AC8	O/Z		
VP_DOUT8/ TS1_WAITIN	AB9	O/Z		
VP_DOUT7/ VADJEN	AB7	I/O/Z	IPD DV_{DD33}	These pins are multiplexed between the VPIF and boot configuration. After reset, these pins are used by the VPIF as display data bits, VP_DOUT[7:0] (O/Z).
VP_DOUT6/ DSPBOOT	AC5			
VP_DOUT5/ PCIEN	AC6			
VP_DOUT4/ CS2BW	AA7			
VP_DOUT3/ BTMODE3	AB6			
VP_DOUT2/ BTMODE2	Y8			
VP_DOUT1/ BTMODE1	AC4			
VP_DOUT0/ BTMODE0	AB5			

Copyright © 2007–2012, Texas Instruments Incorporated

3.7.13 Transport Stream Interface 0 (TSIF0)

Table 3-17. Transport Stream Interface 0 (TSIF0) Terminal Functions

SIGNAL NAME	NO.	TYPE(1)	OTHER(2) (3)	DESCRIPTION
TSIF0 PARALLEL INPUT (PINMUX0.PTSIMUX = 10)				
TS0_CLKIN	AC19	I	IPD DV_{DD33}	TSIF0 receive clock input (I).
$\overline{\text{UCTS1}}$/USD1/ **TS0_EN_WAITO**/ GP[26]	Y17	I/O/Z	IPU DV_{DD33}	This pin is multiplexed between UART1, TSIF0, and GPIO. When TSIF0 input is enabled (PINMUX0.PTSIMUX = 1x), in synchronous mode, this pin is the data enable indicator (I) ***or*** in asynchronous mode, this pin is the wait output (O/Z), TS0_EN_WAITO.
$\overline{\text{URTS1}}$/UIRTX1/ **TS0_WAITO**/GP[25]	AA18	I/O/Z	IPU DV_{DD33}	This pin is multiplexed between UART1, TSIF0, and GPIO. When TSIF0 input is enabled (PINMUX0.PTSIMUX = 1x), in asynchronous mode, this pin is the wait output, TS0_WAITO (O/Z). This TSIF pin function is *not* used in synchronous mode.
$\overline{\text{URTS2}}$/UIRTX2/ **TS0_PSTIN**/GP[41]	AC20	I/O/Z	IPU DV_{DD33}	This pin is multiplexed between UART2, TSIF0, and GPIO. When TSIF0 input is enabled (PINMUX0.PTSIMUX = 1x), this pin is the packet start input indicator, TS0_PSTIN (I).
VP_DIN15_VP_VSYNC/ **TS0_DIN7**	AC18	I/O/Z	IPD DV_{DD33}	These pins are multiplexed between the VPIF and TSIF0. When TSIF0 parallel input mux mode is enabled (PINMUX0.PTSIMUX = 10), these pins are input data bits TS0_DIN[7:0] (I).
VP_DIN14_VP_HSYNC/ **TS0_DIN6**	AA17			
VP_DIN13_FIELD/ **TS0_DIN5**	AB17			
VP_DIN12/ **TS0_DIN4**	AC17			
VP_DIN11/ **TS0_DIN3**	Y16			
VP_DIN10/ **TS0_DIN2**	AA16			
VP_DIN9/ **TS0_DIN1**	AB16			
VP_DIN8/ **TS0_DIN0**	AC16			
TSIF0 SERIAL INPUT (PINMUX0.PTSIMUX = 11)				
TS0_CLKIN	AC19	I	IPD DV_{DD33}	TSIF0 receive clock input (I).
$\overline{\text{UCTS1}}$/USD1/ **TS0_EN_WAITO**/ GP[26]	Y17	I/O/Z	IPU DV_{DD33}	This pin is multiplexed between UART1, TSIF0, and GPIO. When TSIF0 input is enabled (PINMUX0.PTSIMUX = 1x), in synchronous mode, this pin is the data enable indicator (I) ***or*** in asynchronous mode, this pin is the wait output (O/Z), TS0_EN_WAITO.
$\overline{\text{URTS2}}$/UIRTX2/ **TS0_PSTIN**/GP[41]	AC20	I/O/Z	IPU DV_{DD33}	This pin is multiplexed between UART2, TSIF0, and GPIO. When TSIF0 input is enabled (PINMUX0.PTSIMUX = 1x), in synchronous/asynchronous modes, this pin is the packet start input indicator, TS0_PSTIN (I).
URXD1/ **TS0_DIN7**/GP[23]	Y18	I/O/Z	IPD DV_{DD33}	This pin is multiplexed between UART1, TSIF0, and GPIO. When TSIF0 serial input mux mode is enabled (PINMUX0.PTSIMUX = 11), in synchronous/asynchronous modes, this pin is the serial input data bit (I), TS0_DIN7(I).

(1) I = Input, O = Output, Z = High impedance, S = Supply voltage, GND = Ground, A = Analog signal
(2) IPD = Internal pulldown, IPU = Internal pullup. For more detailed information on pullup/pulldown resistors and situations where external pullup/pulldown resistors are required, see Section 4.8.1, *Pullup/Pulldown Resistors*.
(3) Specifies the operating I/O supply voltage for each signal

Copyright © 2007–2012, Texas Instruments Incorporated

Table 3-17. Transport Stream Interface 0 (TSIF0) Terminal Functions (continued)

SIGNAL NAME	NO.	TYPE(1)	OTHER(2) (3)	DESCRIPTION
TSIF0 PARALLEL OUTPUT (PINMUX0.PTSIMUX = 10)				
VP_CLKO3/ **TS0_CLKO**	AC10	O/Z	- DV_{DD33}	This pin is multiplexed between the VPIF and TSIF0. When TSIF0 output is enabled (PINMUX0.PTSOMUX = 1x), this pin is the transmit clock output, TS0_CLKO (O/Z).
$\overline{\text{UDTR0}}$/ **TS0_ENAO**/GP[36]	Y12	I/O/Z	IPU DV_{DD33}	This pin is multiplexed between UART0, TSIF0, and GPIO. When TSIF0 output is enabled (PINMUX0.PTSOMUX = 1x), this pin is the data enable indicator, TS0_ENAO (O/Z) in either synchronous/asynchronous modes.
$\overline{\text{UDSR0}}$/ **TS0_PSTO**/ GP[37]	AB11	I/O/Z	IPU DV_{DD33}	This pin is multiplexed between UART0, TSIF0, and GPIO. When TSIF0 output is enabled (PINMUX0.PTSOMUX = 1x), this pin is the packet start output indicator, TS0_PSTO (O/Z) in either synchronous/asynchronous modes.
$\overline{\text{UDCD0}}$/ **TS0_WAITIN**/ GP[38]	AA11	I/O/Z	IPU DV_{DD33}	This pin is multiplexed between UART0, TSIF0, and GPIO. When TSIF0 output is enabled (PINMUX0.PTSOMUX = 1x), in asynchronous mode, this pin is the wait input, TS0_WAITIN (I). This TSIF pin function is *not* used in synchronous mode.
VP_DIN7/ **TS0_DOUT7**/ TS1_DIN	Y14	I/O/Z	IPD DV_{DD33}	These pins are multiplexed between the VPIF, TSIF0, and TSIF1. When parallel TSIF0 output is enabled (PINMUX0.PTSOMUX = 10), and TSIF1 VPIF_DIN muxing is ***not*** enabled (TSSI_MUX ≠ 11), these pins are the output data bits TS0_DOUT[7:4] (O/Z) in either synchronous/asynchronous modes.
VP_DIN6/ **TS0_DOUT6**/ TS1_PSTIN	AA14			
VP_DIN5/ **TS0_DOUT5**/ TS1_EN_WAITO	AB14			
VP_DIN4/ **TS0_DOUT4**/ TS1_WAITO	AC14			
VP_DIN3/ **TS0_DOUT3**	Y15	I/O/Z	IPD DV_{DD33}	These pins are multiplexed between the VPIF and TSIF0. When parallel TSIF0 output is enabled (PINMUX0.PTSOMUX = 10), these pins are the output data bits TS0_DOUT[3:0] (O/Z) in either synchronous/asynchronous modes.
VP_DIN2/ **TS0_DOUT2**	AA15			
VP_DIN1/ **TS0_DOUT1**	AB15			
VP_DIN0/ **TS0_DOUT0**	AC15			
TSIF0 SERIAL OUTPUT (PINMUX0.PTSIMUX = 11)				
VP_CLKO3/ **TS0_CLKO**	AC10	O/Z	- DV_{DD33}	This pin is multiplexed between the VPIF and TSIF0. When TSIF0 output is enabled (PINMUX0.PTSOMUX = 1x), this pin is the transmit clock output, TS0_CLKO (O/Z).
$\overline{\text{UDTR0}}$/ **TS0_ENAO**/GP[36]	Y12	I/O/Z	IPU DV_{DD33}	This pin is multiplexed between UART0, TSIF0, and GPIO. When TSIF0 output is enabled (PINMUX0.PTSOMUX = 1x), this pin is the data enable indicator, TS0_ENAO (O/Z) in either synchronous/asynchronous modes.
$\overline{\text{UDSR0}}$/ **TS0_PSTO**/GP[37]	AB11	I/O/Z	IPU DV_{DD33}	This pin is multiplexed between UART0, TSIF0, and GPIO. When TSIF0 output is enabled (PINMUX0.PTSOMUX = 1x), this pin is the packet start output indicator, TS0_PSTO (O/Z) in either synchronous/asynchronous modes.
$\overline{\text{UDCD0}}$/ **TS0_WAITIN**/GP[38]	AA11	I/O/Z	IPU DV_{DD33}	This pin is multiplexed between UART0, TSIF0, and GPIO. When TSIF0 output is enabled (PINMUX0.PTSOMUX = 1x), in asynchronous mode, this pin is the wait input, TS0_WAITIN (I). This TSIF pin function is *not* used in synchronous mode.
UTXD1/URCTX1/ **TS0_DOUT7**/GP[24]	AB19	I/O/Z	IPD DV_{DD33}	This pin is multiplexed between UART1, TSIF0, and GPIO. When serial TSIF0 output is enabled (PINMUX0.PTSOMUX = 11), in synchronous/asynchronous modes, this pin is the serial output data bit, TS0_DOUT[7] (O/Z).

Copyright © 2007–2012, Texas Instruments Incorporated

3.7.14 Transport Stream Interface 1 (TSIF1)

Table 3-18. Transport Stream Interface 1 (TSIF1) Terminal Functions

SIGNAL NAME	NO.	TYPE(1)	OTHER(2) (3)	DESCRIPTION
TSIF1 INPUT – UART0 MUXING (PINMUX0.TSSIMUX = 01)				
TS1_CLKIN	AC11	I	IPD DV_{DD33}	TSIF1 receive clock input (I).
URXD0/ **TS1_DIN**	AB13	I	IPD DV_{DD33}	This pin is multiplexed between UART0 and TSIF1. When TSIF1 input on UART0 muxing is enabled (PINMUX0.TSSIMUX = 01), this pin is the serial data input, TS1_DIN (I).
$\overline{\text{URTS0}}$/UIRTX0/ **TS1_EN_WAITO**	AA13	I/O/Z	IPU DV_{DD33}	This pin is multiplexed between UART0 and TSIF1. When TSIF1 input on UART0 muxing is enabled (PINMUX0.TSSIMUX = 01), in synchronous mode, this pin is the data enable indicator (I) ***or*** in asynchronous mode, this pin is the wait output, TS1_EN_WAITO (O/Z).
UTXD0/URCTX0/ **TS1_PSTIN**	Y13	I/O/Z	IPD DV_{DD33}	This pin is multiplexed between UART0 and TSIF1. When TSIF1 input on UART0 muxing is enabled (PINUMX0.TSSIMUX = 01), this pin is the packet start indicator, TS1_PSTIN (I).
TSIF1 INPUT – VPIF DOUT MUXING (PINMUX0.TSSIMUX = 10)				
TS1_CLKIN	AC11	I	IPD DV_{DD33}	TSIF1 receive clock input (I).
VP_DOUT15/ **TS1_DIN**	AB8	I/O/Z	IPD DV_{DD33}	This pin is multiplexed between VPIF and TSIF1. When TSIF1 input on VPIF DOUT muxing is enabled (PINMUX0.TSSIMUX = 10), this pin is the serial data input, TS1_DIN (I).
VP_DOUT13/ **TS1_EN_WAITO**	Y9	I/O/Z	IPD DV_{DD33}	This pin is multiplexed between VPIF and TSIF1. When TSIF1 input on VPIF DOUT muxing is enabled (PINMUX0.TSSIMUX = 10), in synchronous mode, this pin is the data enable indicator (I) ***or*** in asynchronous mode, this pin is the wait output, TS1_EN_WAITO (O/Z).
VP_DOUT14/ **TS1_PSTIN**	AC7	I/O/Z	IPD DV_{DD33}	This pin is multiplexed between VPIF and TSIF1. When TSIF1 input on VPIF DOUT muxing is enabled (PINMUX0.TSSIMUX = 10), in synchronous/asynchronous modes, this pin is the packet start indicator, TS1_PSTIN (I).
TSIF1 INPUT – VPIF DIN MUXING (PINMUX0.TSSIMUX = 11)				
TS1_CLKIN	AC11	I	IPD DV_{DD33}	TSIF1 receive clock input (I).
VP_DIN7/ TS0_DOUT7/ **TS1_DIN**	Y14	I/O/Z	IPD DV_{DD33}	This pin is multiplexed between VPIF, TSIF0, and TSIF1. When TSIF1 input on VPIF DIN muxing is enabled (PINMUX0.TSSIMUX = 11), in synchronous/asynchronous modes, this pin is the serial data input, TS1_DIN (I).
VP_DIN5/ TS0_DOUT5/ **TS1_EN_WAITO**	AB14	I/O/Z	IPD DV_{DD33}	This pin is multiplexed between VPIF, TSIF0, and TSIF1. When TSIF1 input on VPIF DIN muxing is enabled (PINMUX0.TSSIMUX = 11), in synchronous mode, this pin is the data enable indicator (I) ***or*** in asynchronous mode, this pin is the wait output, TS1_EN_WAITO (O/Z).
VP_DIN6/ TS0_DOUT6/ **TS1_PSTIN**	AA14	I/O/Z	IPD DV_{DD33}	This pin is multiplexed between VPIF, TSIF0, and TSIF1. When TSIF1 input on VPIF DIN muxing is enabled (PINMUX0.TSSIMUX = 11), in synchronous/asynchronous modes, this pin is the packet start indicator, TS1_PSTIN (I).

(1) I = Input, O = Output, Z = High impedance, S = Supply voltage, GND = Ground, A = Analog signal
(2) IPD = Internal pulldown, IPU = Internal pullup. For more detailed information on pullup/pulldown resistors and situations where external pullup/pulldown resistors are required, see Section 4.8.1, *Pullup/Pulldown Resistors*.
(3) Specifies the operating I/O supply voltage for each signal

Copyright © 2007–2012, Texas Instruments Incorporated

Table 3-18. Transport Stream Interface 1 (TSIF1) Terminal Functions (continued)

SIGNAL NAME	NO.	TYPE(1)	OTHER(2) (3)	DESCRIPTION
TSIF1 OUTPUT – VPIF DOUT MUXING (PINMUX0.TSSOMUX = 10)				
VP_CLKIN3/ **TS1_CLKO**	AC9	I/O/Z	IPD DV_{DD33}	This pin is multiplexed between the VPIF and TSIF1. When TSIF1 output is enabled (PINMUX0.TSSOMUX = 1x), in synchronous/asynchronous modes, this pin is the transmit clock output, TS1_CLKO (O/Z).
VP_DOUT11/ **TS1_DOUT**	AB10	I/O/Z	IPD DV_{DD33}	This pin is multiplexed between the VPIF and TSIF1. When TSIF1 output on VPIF DOUT muxing is enabled (PINMUX0.TSSOMUX = 10), in synchronous/asynchronous modes, this pin is the serial data output, TS1_DOUT (O/Z).
VP_DOUT9/ **TS1_ENAO**	AC8	I/O/Z	IPD DV_{DD33}	This pin is multiplexed between the VPIF and TSIF1. When TSIF1 output on VPIF DOUT muxing is enabled (PINMUX0.TSSOMUX = 10), in synchronous/asynchronous modes, this pin is the data enable indicator, TS1_ENAO (O/Z).
VP_DOUT10/ **TS1_PSTO**	AA10	I/O/Z	IPD DV_{DD33}	This pin is multiplexed between the VPIF and TSIF1. When TSIF1 output on VPIF DOUT muxing is enabled (PINMUX0.TSSOMUX = 10), in synchronous/asynchronous modes, this pin is the packet start indicator output, TS1_PSTO (O/Z).
VP_DOUT8/ **TS1_WAITIN**	AB9	I/O/Z	IPD DV_{DD33}	This pin is multiplexed between the VPIF and TSIF1. When TSIF1 output on VPIF DOUT muxing is enabled (PINMUX0.TSSOMUX = 10), in asynchronous mode, this pin is the wait indicator input, TS1_WAITIN (I). This TSIF pin function is *not* used in synchronous mode.
TSIF1 OUTPUT – UART/PWM MUXING (PINMUX0.TSSOMUX = 11)				
VP_CLKIN3/ **TS1_CLKO**	AC9	I/O/Z	IPD DV_{DD33}	This pin is multiplexed between the VPIF and TSIF1. When TSIF1 output is enabled (PINMUX0.TSSOMUX = 1x), in synchronous/asynchronous modes, this pin is the transmit clock output, TS1_CLKO (O/Z).
PWM1/ **TS1_DOUT**	W18	I/O/Z	- DV_{DD33}	This pin is multiplexed between PWM1 and TSIF1. When TSIF1 output on UART/PWM is enabled (PINMUX0.TSSOMUX = 11), in synchronous/asynchronous modes, this pin is the serial data output, TS1_DOUT (O/Z).
PWM0/ CRG0_PO/ **TS1_ENAO**	W17	O/Z	- DV_{DD33}	This pin is multiplexed between PWM0, CRGEN0, and TSIF1. When TSIF1 output on UART/PWM is enabled (PINMUX0.TSSOMUX = 11), in synchronous/asynchronous modes, this pin is the data enable indicator output, TS1_ENAO (O/Z)
$\overline{\text{UCTS2}}$/USD2/ CRG0_VCX1/ GP[42]/ **TS1_PSTO**	AC21	I/O/Z	IPU DV_{DD33}	This pin is multiplexed between UART2, CRGEN0, GPIO, and TSIF1. When TSIF1 output on UART/PWM is enabled (PINMUX0.TSSOMUX = 11), in synchronous/asynchronous modes, this pin is the packet start indicator output, TS1_PSTO (O/Z).
$\overline{\text{URIN0}}$/GP[8]/ **TS1_WAITIN**	Y11	I/O/Z	IPD DV_{DD33}	This pin is multiplexed between UART0, GPIO, and TSIF1. When TSIF1 output on UART/PWM is enabled (PINMUX0.TSSOMUX = 11), in asynchronous mode, this pin is the wait indicator input, TS1_WAITIN (I). This TSIF pin function is *not* used in synchronous mode.

Copyright © 2007–2012, Texas Instruments Incorporated

3.7.15 Inter-Integrated Circuit (I2C)

Table 3-19. I2C Terminal Functions

SIGNAL NAME	NO.	TYPE(1)	OTHER(2)	DESCRIPTION
I2C				
SCL	U5	I/O/Z	- DV_{DD33}	I2C clock output SCL. For proper device operation, this pin ***must*** be pulled up via external resistor.
SDA	U4	I/O/Z	- DV_{DD33}	I2C bidirectional data signal SDA. For proper device operation, this pin ***must*** be pulled up via external resistor.

(1) I = Input, O = Output, Z = High impedance, S = Supply voltage, GND = Ground, A = Analog signal
(2) Specifies the operating I/O supply voltage for each signal

Copyright © 2007–2012, Texas Instruments Incorporated

3.7.16 Serial Peripheral Interface (SPI)

Table 3-20. SPI Terminal Functions

SIGNAL NAME	NO.	TYPE(1)	OTHER(2) (3)	DESCRIPTION
SPI				
SPI_CLK	V1	I/O/Z	IPD DV_{DD33}	SPI clock
$\overline{\text{SPI_EN}}$	T5	I/O/Z	IPD DV_{DD33}	SPI device enable
$\overline{\text{SPI_CS0}}$	T4	I/O/Z	IPD DV_{DD33}	SPI chip select 0
$\overline{\text{SPI_CS1}}$	U3	I/O/Z	IPD DV_{DD33}	SPI chip select 1
SPI_SOMI	R5	I/O/Z	IPD DV_{DD33}	SPI slave out, master in data pin
SPI_SIMO	P5	I/O/Z	IPD DV_{DD33}	SPI slave in, master out data pin

(1) I = Input, O = Output, Z = High impedance, S = Supply voltage, GND = Ground, A = Analog signal
(2) IPD = Internal pulldown, IPU = Internal pullup. For more detailed information on pullup/pulldown resistors and situations where external pullup/pulldown resistors are required, see Section 4.8.1, *Pullup/Pulldown Resistors*.
(3) Specifies the operating I/O supply voltage for each signal

Copyright © 2007–2012, Texas Instruments Incorporated

3.7.17 Multichannel Audio Serial Port (McASP)

Table 3-21. Multichannel Audio Serial Port (McASP) Terminal Functions

SIGNAL NAME	SIGNAL NO.	TYPE(1)	OTHER(2) (3)	DESCRIPTION
McASP0				
ACLKR0	AA2	I/O/Z	IPD DV_{DD33}	McASP0 receive bit clock
AHCLKR0	AB2	I/O/Z	IPD DV_{DD33}	McASP0 receive high-frequency master clock
AFSR0	Y3	I/O/Z	IPD DV_{DD33}	McASP0 receive frame sync
ACLKX0	AA1	I/O/Z	IPD DV_{DD33}	McASP0 transmit bit clock
AHCLKX0	Y1	I/O/Z	IPD DV_{DD33}	McASP0 transmit high-frequency master clock
AFSX0	Y4	I/O/Z	IPD DV_{DD33}	McASP0 transmit frame sync
AXR0[3]	W3	I/O/Z	IPD DV_{DD33}	McASP0 transmit/receive data pins [3:0]
AXR0[2]	W4			
AXR0[1]	V4			
AXR0[0]	V3			
AMUTE0	Y2	I/O/Z	IPD DV_{DD33}	McASP0 mute output
AMUTEIN0	AA3	I	IPD DV_{DD33}	McASP0 mute input
McASP1				
ACLKX1	W1	I/O/Z	IPD DV_{DD33}	McASP1 transmit bit clock
AHCLKX1	W2	I/O/Z	IPD DV_{DD33}	McASP1 transmit high-frequency master clock
AXR1[0]	V2	I/O/Z	IPD DV_{DD33}	McASP1 transmit data pin [0]

(1) I = Input, O = Output, Z = High impedance, S = Supply voltage, GND = Ground, A = Analog signal
(2) IPD = Internal pulldown, IPU = Internal pullup. For more detailed information on pullup/pulldown resistors and situations where external pullup/pulldown resistors are required, see Section 4.8.1, *Pullup/Pulldown Resistors*.
(3) Specifies the operating I/O supply voltage for each signal

Copyright © 2007–2012, Texas Instruments Incorporated

3.7.18 Clock Recovery Generator (CRGEN)

Table 3-22. Clock Recovery Generator (CRGEN) Terminal Functions

SIGNAL NAME	NO.	TYPE(1)	OTHER(2) (3)	DESCRIPTION
CRGEN1 ONLY MODE (PINMUX0.CRGMUX = 001)				
URXD2/ **CRG1_VCXI**/ GP[39]/ CRG0_VCXI	AB20	I/O/Z	IPD DV_{DD33}	This pin is multiplexed between UART2, CRGEN1, GPIO, and CRGEN0. When CRGEN1 is enabled (PINMUX0.CRGMUX = 001), this pin is CRGEN1 input clock from external VCXO, CRG1_VCXI (I).
UTXD2/ URCTX2/ **CRG1_PO**/ GP[40]/ CRG0_PO	AA19	I/O/Z	IPD DV_{DD33}	This pin is multiplexed between UART2, CRGEN1, GPIO, and CRGEN0. When CRGEN1 is enabled (PINMUX0.CRGMUX = 001), this pin is CRGEN1 pulse width modulation output, CRG1_PO (O/Z).
CRGEN0 ONLY (UART2/PWM0 MUX) MODE (PINMUX0.CRGMUX = 100)				
$\overline{\text{UCTS2}}$/ USD2/ **CRG0_VCXI**/ GP[42]/ TS1_PSTO	AC21	I/O/Z	IPU DV_{DD33}	This pin is multiplexed between UART2, CRGEN0, GPIO, and TSIF1. When CRGEN0 on UART2/PWM muxing is enabled (PINMUX0.CRGMUX = 10x), this pin is CRGEN0 input clock from external VCXO, CRG0_VCXI (I).
PWM0/ **CRG0_PO**/ TS1_ENAO	W17	O/Z	– DV_{DD33}	This pin is multiplexed between PWM0, CRGEN0, and TSIF1. When CRGEN0 on UART2/PWM muxing is enabled (PINMUX0.CRGMUX = 10x), this pin is CRGEN0 pulse width modulation output, CRG0_PO (O/Z).
CRGEN0 AND CRGEN1 MODE (PINMUX0.CRGMUX = 101)				
URXD2/ **CRG1_VCXI**/ GP[39]/ CRG0_VCXI	AB20	I/O/Z	IPD DV_{DD33}	This pin is multiplexed between UART2, CRGEN1, GPIO, and CRGEN0. When CRGEN1 is enabled (PINMUX0.CRGMUX = x01), this pin is CRGEN1 input clock from external VCXO, CRG1_VCXI (I).
UTXD2/ URCTX2/ **CRG1_PO**/ GP[40]/ CRG0_PO	AA19	I/O/Z	IPD DV_{DD33}	This pin is multiplexed between UART2, CRGEN1, GPIO, and CRGEN0. When CRGEN1 is enabled (PINMUX0.CRGMUX = x01), this pin is CRGEN1 pulse width modulation output, CRG1_PO (O/Z).
$\overline{\text{UCTS2}}$/ USD2/ **CRG0_VCXI**/ GP[42]/ TS1_PSTO	AC21	I/O/Z	IPU DV_{DD33}	This pin is multiplexed between UART2, CRGEN0, GPIO, and TSIF1. When CRGEN0 on UART2/PWM muxing is enabled (PINMUX0.CRGMUX = 10x), this pin is CRGEN0 input clock from external VCXO, CRG0_VCXI (I).
PWM0/ **CRG0_PO**/ TS1_ENAO	W17	O/Z	– DV_{DD33}	This pin is multiplexed between PWM0, CRGEN0, and TSIF1. When CRGEN0 on UART2/PWM muxing is enabled (PINMUX0.CRGMUX = 10x), this pin is CRGEN0 pulse width modulation output, CRG0_PO (O/Z).
CRGEN0 ONLY (UART2 MUX) MODE (PINMUX0.CRGMUX = 110)				
URXD2/ CRG1_VCXI/ GP[39]/ **CRG0_VCXI**	AB20	I/O/Z	IPD DV_{DD33}	This pin is multiplexed between UART2, CRGEN1, GPIO, and CRGEN0. When CRGEN0 on UART2 muxing is enabled (PINMUX0.CRGMUX = 110), this pin is CRGEN0 input clock from external VCXO, CRG0_VCXI (I).
UTXD2/ URCTX2/ CRG1_PO/ GP[40]/ **CRG0_PO**	AA19	I/O/Z	IPD DV_{DD33}	This pin is multiplexed between UART2, CRGEN1, GPIO, and CRGEN0. When CRGEN0 on UART2 muxing is enabled (PINMUX0.CRGMUX = 110), this pin is CRGEN0 pulse width modulation output, CRG0_PO (O/Z).

(1) I = Input, O = Output, Z = High impedance, S = Supply voltage, GND = Ground, A = Analog signal
(2) IPD = Internal pulldown, IPU = Internal pullup. For more detailed information on pullup/pulldown resistors and situations where external pullup/pulldown resistors are required, see Section 4.8.1, *Pullup/Pulldown Resistors*.
(3) Specifies the operating I/O supply voltage for each signal

Copyright © 2007–2012, Texas Instruments Incorporated

3.7.19 UART0

Table 3-23. UART0 Terminal Functions

SIGNAL NAME	NO.	TYPE(1)	OTHER(2) (3)	DESCRIPTION
Actual UART0 pin functions are determined by the PINMUX0 and PINMUX1 register bit settings. For more details, see Section 4.7.3, *Pin Multiplexing*.				
UART0 WITH MODEM CONTROL (PINMUX1.UART0CTL = 00)				
URXD0/ TS1_DIN	AB13	I	IPD DV_{DD33}	This pin is multiplexed between UART0 and TSIF1. When UART0 UART functional muxing is selected (PINMUX1.UART0CTL = 0x) ***and*** TSIF1 input on UART0 muxing is ***not*** enabled (PINMUX0.TSSIMUX ≠ 01), this pin is UART0 receive data, URXD0 (I).
UTXD0/ URCTX0/ TS1_PSTIN	Y13	I/O/Z	IPD DV_{DD33}	This pin is multiplexed between UART0 and TSIF1. When UART0 UART functional muxing is selected (PINMUX1.UART0CTL = 0x) ***and*** TSIF1 input on UART0 muxing is ***not*** enabled (PINMUX0.TSSIMUX ≠ 01), this pin is UART0 transmit data, UTXD0 (O/Z).
$\overline{\text{URTS0}}$ / UIRTX0/ TS1_EN_WAITO	AA13	I/O/Z	IPU DV_{DD33}	This pin is multiplexed between UART0 and TSIF1. When UART0 UART functional muxing is selected (PINMUX1.UART0CTL = 0x) ***and*** TSIF1 input on UART0 muxing is ***not*** enabled (PINMUX0.TSSIMUX ≠ 01), this pin is the UART0 request-to-send signal, $\overline{\text{URTS0}}$ (O/Z).
$\overline{\text{UCTS0}}$ / USD0	AC12	I/O/Z	IPU DV_{DD33}	This pin is multiplexed between UART0 and TSIF1. When UART0 UART functional muxing is selected (PINMUX1.UART0CTL = 0x) ***and*** TSIF1 input on UART0 muxing is ***not*** enabled (PINMUX0.TSSIMUX ≠ 01), this pin is the UART0 clear-to-send signal, $\overline{\text{UCTS0}}$ (I).
$\overline{\text{UDTR0}}$ / TS0_ENAO/ GP[36]	Y12	I/O/Z	IPU DV_{DD33}	This pin is multiplexed between UART0, TSIF0, and GPIO. When UART0 UART with modem functional muxing is selected (PINMUX1.UART0CTL = 00) ***and*** TSIF0 output muxing is ***not*** enabled (PINMUX0.PTSOMUX ≠ 1x), this pin is UART0 data-terminal-ready, $\overline{\text{UDTR0}}$ (O/Z).
$\overline{\text{UDSR0}}$ / TS0_PSTO/ GP[37]	AB11	I/O/Z	IPU DV_{DD33}	This pin is multiplexed between UART0, TSIF0, and GPIO. When UART0 UART with modem functional muxing is selected (PINMUX1.UART0CTL = 00) ***and*** TSIF0 output muxing is ***not*** enabled (PINMUX0.PTSOMUX ≠ 1x), this pin is UART0 data-set-ready, $\overline{\text{UDSR0}}$ (I).
$\overline{\text{UDCD0}}$ / TS0_WAITIN/ GP[38]	AA11	I/O/Z	IPU DV_{DD33}	This pin is multiplexed between UART0, TSIF0, and GPIO. When UART0 UART with modem functional muxing is selected (PINMUX1.UART0CTL = 00) ***and*** TSIF0 output muxing is ***not*** enabled (PINMUX0.PTSOMUX ≠ 1x), this pin is UART0 data-carrier-detect, $\overline{\text{UDCD0}}$ (I).
$\overline{\text{URIN0}}$ /GP[8]/ TS1_WAITIN	Y11	I/O/Z	IPD DV_{DD33}	This pin is multiplexed between UART0, GPIO, and TSIF1. When UART0 UART with modem functional muxing is selected (PINMUX1.UART0CTL = 00) ***and*** TSIF1 output on UART/PWM muxing is ***not*** enabled (PINMUX0.TSSOMUX ≠ 11), this pin is the UART0 ring indicator, $\overline{\text{URIN0}}$ (I).
UART0 WITHOUT MODEM CONTROL (PINMUX1.UART0CTL = 01)				
URXD0/ TS1_DIN	AB13	I	IPD DV_{DD33}	This pin is multiplexed between UART0 and TSIF1. When UART0 UART functional muxing is selected (PINMUX1.UART0CTL = 0x) ***and*** TSIF1 input on UART0 muxing is ***not*** enabled (PINMUX0.TSSIMUX ≠ 01), this pin is UART0 receive data, URXD0 (I).
UTXD0/ URCTX0/ TS1_PSTIN	Y13	I/O/Z	IPD DV_{DD33}	This pin is multiplexed between UART0 and TSIF1. When UART0 UART functional muxing is selected (PINMUX1.UART0CTL = 0x) ***and*** TSIF1 input on UART0 muxing is ***not*** enabled (PINMUX0.TSSIMUX ≠ 01), this pin is UART0 transmit data, UTXD0 (O/Z).
$\overline{\text{URTS0}}$ / UIRTX0/ TS1_EN_WAITO	AA13	I/O/Z	IPU DV_{DD33}	This pin is multiplexed between UART0 and TSIF1. When UART0 UART functional muxing is selected (PINMUX1.UART0CTL = 0x) ***and*** TSIF1 input on UART0 muxing is ***not*** enabled (PINMUX0.TSSIMUX ≠ 01), this pin is UART0 request-to-send signal, $\overline{\text{URTS0}}$ (O/Z).
$\overline{\text{UCTS0}}$ / USD0	AC12	I/O/Z	IPU DV_{DD33}	When UART0 UART functional muxing is selected (PINMUX1.UART0CTL = 0x) ***and*** TSIF1 input on UART0 muxing is ***not*** enabled (PINMUX0.TSSIMUX ≠ 01), this pin is UART0 clear-to-send signal, $\overline{\text{UCTS0}}$ (I).

(1) IPD = Internal pulldown, IPU = Internal pullup. For more detailed information on pullup/pulldown resistors and situations where external pullup/pulldown resistors are required, see Section 4.8.1, *Pullup/Pulldown Resistors*.
(2) I = Input, O = Output, Z = High impedance, S = Supply voltage, GND = Ground, A = Analog signal
(3) Specifies the operating I/O supply voltage for each signal

Copyright © 2007–2012, Texas Instruments Incorporated

Table 3-23. UART0 Terminal Functions (continued)

SIGNAL NAME	SIGNAL NO.	TYPE(1)	OTHER(2) (3)	DESCRIPTION
UART0 IrDA/CIR FUNCTION (PINMUX1.UART0CTL = 1x)				
URXD0/ TS1_DIN	AB13	I	IPD DV_{DD33}	This pin is multiplexed between UART0 and TSIF1. When TSIF1 input on UART0 muxing is ***not*** enabled (PINMUX0.TSSIMUX ≠ 01), this pin is UART0 IrDA/CIR receive data, URXD0 (I).
UTXD0/ **URCTX0**/ TS1_PSTIN	Y13	I/O/Z	IPD DV_{DD33}	This pin is multiplexed between UART0 and TSIF1. When UART0 IrDA/CIR functional muxing is selected (PINMUX1.UART0CTL = 1x) ***and*** TSIF1 input on UART0 muxing is ***not*** enabled (PINMUX0.TSSIMUX ≠ 01), this pin is UART0 CIR transmit data, URCTX0 (O/Z).
$\overline{\text{URTS0}}$/ **UIRTX0**/ TS1_EN_WAITO	AA13	I/O/Z	IPU DV_{DD33}	This pin is multiplexed between UART0 and TSIF1. When UART0 IrDA/CIR functional muxing is selected (PINMUX1.UART0CTL = 1x) ***and*** TSIF1 input on UART0 muxing is ***not*** enabled (PINMUX0.TSSIMUX ≠ 01), this pin is UART0 IrDA transmit data, UIRTX0 (O/Z).
$\overline{\text{UCTS0}}$/ **USD0**	AC12	I/O/Z	IPU DV_{DD33}	When UART0 IrDA/CIR functional muxing is selected (PINMUX1.UART0CTL = 1x) ***and*** TSIF1 input on UART0 muxing is ***not*** enabled (PINMUX0.TSSIMUX ≠ 01), this pin is UART0 IrDA transceiver control, USD0 (O/Z).

Copyright © 2007–2012, Texas Instruments Incorporated

3.7.20 UART1

Table 3-24. UART1 Terminal Functions

SIGNAL NAME	NO.	TYPE(1)	OTHER(2) (3)	DESCRIPTION
UART1 WITH FLOW CONTROL (PINMUX1.UART1CTL = 00)				
Actual UART1 pin functions are determined by the PINMUX0 and PINMUX1 register bit settings. For more details, see Section 4.7.3, *Pin Multiplexing*.				
URXD1/ TS0_DIN7/ GP[23]	Y18	I/O/Z	IPD DV_{DD33}	This pin is multiplexed between UART1, TSIF0, and GPIO. When UART1 UART functional muxing is selected (PINMUX1.UART1CTL = 0x) ***and*** TSIF0 serial input is ***not*** enabled (PINMUX0.PTSIMUX ≠ 11), this pin is UART1 receive data, URXD1 (I).
UTXD1/ URCTX1/ TS0_DOUT7/ GP[24]	AB19	I/O/Z	IPD DV_{DD33}	This pin is multiplexed between UART1, TSIF0, and GPIO. When UART1 UART functional muxing is selected (PINMUX1.UART1CTL = 0x) ***and*** TSIF0 serial output is ***not*** enabled (PINMUX0.PTSIMUX ≠ 11), this pin is UART1 transmit data, UTXD1 (O/Z).
$\overline{\text{URTS1}}$ /UIRTX1/ TS0_WAITO/ GP[25]	AA18	I/O/Z	IPU DV_{DD33}	This pin is multiplexed between UART1, TSIF0, and GPIO. When UART1 UART with flow control muxing is selected (PINMUX1.UART1CTL = 00) ***and*** TSIF0 input is ***not*** enabled (PINMUX0.PTSIMUX ≠ 0x), this pin is UART1 request-to-send, $\overline{\text{URTS1}}$ (O/Z).
$\overline{\text{UCTS1}}$ /USD1 TS0_EN_WAITO/ GP[26]	Y17	I/O/Z	IPU DV_{DD33}	This pin is multiplexed between UART1, TSIF0, and GPIO. When UART1 UART with flow control muxing is selected (PINMUX1.UART1CTL = 00) ***and*** TSIF0 input is ***not*** enabled (PINMUX0.PTSIMUX ≠ 0x), this pin is UART1 clear-to-send, $\overline{\text{UCTS1}}$ (I).
UART1 WITHOUT FLOW CONTROL (PINMUX1.UART1CTL = 01)				
URXD1/ TS0_DIN7/ GP[23]	Y18	I/O/Z	IPD DV_{DD33}	This pin is multiplexed between UART1, TSIF0, and GPIO. When UART1 UART functional muxing is selected (PINMUX1.UART1CTL = 0x) ***and*** TSIF0 serial input is ***not*** enabled (PINMUX0.PTSIMUX ≠ 11), this pin is UART1 receive data, URXD1 (I).
UTXD1/ URCTX1/ TS0_DOUT7/ GP[24]	AB19	I/O/Z	IPD DV_{DD33}	This pin is multiplexed between UART1, TSIF0, and GPIO. When UART1 UART functional muxing is selected (PINMUX1.UART1CTL = 0x) ***and*** TSIF0 serial output is ***not*** enabled (PINMUX0.PTSIMUX ≠ 11), this pin is UART1 transmit data, UTXD1 (O/Z).
UART1 IrDA/CIR FUNCTION (PINMUX1.UART1CTL = 10)				
URXD1/ TS0_DIN7/ GP[23]	Y18	I/O/Z	IPD DV_{DD33}	This pin is multiplexed between UART1, TSIF0, and GPIO. When UART1 IrDA/CIR functional muxing is selected (PINMUX1.UART1CTL = 10) ***and*** TSIF0 serial input is ***not*** enabled (PINMUX0.PTSIMUX ≠ 11), this pin is UART1 receive data, URXD1 (I).
UTXD1/**URCTX1**/ TS0_DOUT7/ GP[24]	AB19	I/O/Z	IPD DV_{DD33}	This pin is multiplexed between UART1, TSIF0, and GPIO. When UART1 IrDA/CIR functional muxing is selected (PINMUX1.UART1CTL = 10) ***and*** TSIF0 serial output is ***not*** enabled (PINMUX0.PTSOMUX ≠ 11), this pin is UART1 CIR transmit data, URCTX1 (O/Z).
$\overline{\text{URTS1}}$/**UIRTX1**/ TS0_WAITO/ GP[25]	AA18	I/O/Z	IPU DV_{DD33}	This pin is multiplexed between UART1, TSIF0, and GPIO. When UART1 IrDA/CIR functional muxing is selected (PINMUX1.UART1CTL = 10) ***and*** TSIF0 input is ***not*** enabled (PINMUX0.PTSIMUX = 0x), this pin is UART1 IrDA transmit data, UIRTX1 (O/Z).
$\overline{\text{UCTS1}}$/**USD1**/ TS0_EN_WAITO/ GP[26]	Y17	I/O/Z	IPU DV_{DD33}	This pin is multiplexed between UART1, TSIF0, and GPIO. When UART1 IrDA/CIR functional muxing is selected (PINMUX1.UART1CTL = 10) ***and*** TSIF0 input is ***not*** enabled (PINMUX0.PTSIMUX = 0x), this pin is UART1 IrDA tranceiver control, USD1 (O/Z).

(1) IPD = Internal pulldown, IPU = Internal pullup. For more detailed information on pullup/pulldown resistors and situations where external pullup/pulldown resistors are required, see Section 4.8.1, *Pullup/Pulldown Resistors*.
(2) I = Input, O = Output, Z = High impedance, S = Supply voltage, GND = Ground, A = Analog signal
(3) Specifies the operating I/O supply voltage for each signal

Copyright © 2007–2012, Texas Instruments Incorporated

3.7.21 UART2

Table 3-25. UART2 Terminal Functions

SIGNAL NAME	NO.	TYPE(1)	OTHER(2) (3)	DESCRIPTION
UART2 WITH FLOW CONTROL (PINMUX1.UART2CTL = 00)				
Actual UART2 pin functions are determined by the PINMUX0 and PINMUX1 register bit settings. For more details, see Section 4.7.3, *Pin Multiplexing*.				
URXD2/ CRG1_VCXI/ GP[39]/ CRG0_VCXI	AB20	I/O/Z	IPD DV_{DD33}	This pin is multiplexed between UART2, CRGEN1, GPIO, and CRGEN0. When UART2 UART functional muxing is selected (PINMUX1.UART2CTL = 0x) ***and*** CRGEN0/1 are ***not*** enabled (PINMUX0.CRGMUX ≠ x01, 110), this pin is UART2 receive data, URXD2 (I).
UTXD2/ URCTX2/ CRG1_PO/ GP[40]/ CRG0_PO	AA19	I/O/Z	IPD DV_{DD33}	This pin is multiplexed between UART2, CRGEN1, GPIO, and CRGEN0. When UART2 UART functional muxing is selected (PINMUX1.UART2CTL = 0x) ***and*** CRGEN0/1 are ***not*** enabled (PINMUX0.CRGMUX ≠ x01, 110), this pin is UART2 transmit data, UTXD2 (O/Z).
$\overline{\text{URTS2}}$ /UIRTX2/ TS0_PSTIN/ GP[41]	AC20	I/O/Z	IPU DV_{DD33}	This pin is multiplexed between UART2, TSIF0, and GPIO. When UART2 UART with flow control muxing is selected (PINMUX1.UART2CTL = 00) ***and*** TSIF0 input is ***not*** enabled (PINMUX0.PTSIMUX = 0x), this pin is UART2 request-to-send, $\overline{\text{URTS2}}$ (O/Z).
$\overline{\text{UCTS2}}$ /USD2/ CRG0_VCXI/ GP[42]/ TS1_PSTO	AC21	I/O/Z	IPU DV_{DD33}	This pin is multiplexed between UART2, CRGEN0, GPIO, and TSIF1. When UART2 UART with flow control muxing is selected (PINMUX1.UART2CTL = 00) ***and*** TSIF1 output is ***not*** enabled (PINMUX0.PTSOMUX = 0x), this pin is UART2 clear-to-send, $\overline{\text{UCTS2}}$ (I).
UART2 WITHOUT FLOW CONTROL (PINMUX1.UART2CTL = 01)				
URXD2/ CRG1_VCXI/ GP[39]/ CRG0_VCXI	AB20	I/O/Z	IPD DV_{DD33}	This pin is multiplexed between UART2, CRGEN1, GPIO, and CRGEN0. When UART2 UART functional muxing is selected (PINMUX1.UART2CTL = 0x) ***and*** CRGEN0/1 are ***not*** enabled (PINMUX0.CRGMUX ≠ x01, 110), this pin is UART2 receive data, URXD2 (I).
UTXD2/ URCTX2/ CRG1_PO/ GP[40]/ CRG0_PO	AA19	I/O/Z	IPD DV_{DD33}	This pin is multiplexed between UART2, CRGEN1, GPIO, and CRGEN0. When UART2 UART functional muxing is selected (PINMUX1.UART2CTL = 0x) ***and*** CRGEN0/1 are ***not*** enabled (PINMUX0.CRGMUX ≠ x01, 110), this pin is UART2 transmit data, UTXD2 (O/Z).
UART2 IrDA/CIR FUNCTION (PINMUX1.UART2CTL = 10)				
URXD2/ CRG1_VCXI/ GP[39]/ CRG0_VCXI	AB20	I/O/Z	IPD DV_{DD33}	This pin is multiplexed between UART2, CRGEN1, GPIO, and CRGEN0. When UART2 IrDA/CIR functional muxing is selected (PINMUX1.UART2CTL = 10) ***and*** CRGEN0/1 are ***not*** enabled (PINMUX0.CRGMUX ≠ x01, 110), this pin is UART2 receive data, URXD2 (I).
UTXD2/**URCTX2**/ CRG1_PO/ GP[40]/ CRG0_PO	AA19	I/O/Z	IPD DV_{DD33}	This pin is multiplexed between UART2, CRGEN1, GPIO, and CRGEN0. When UART2 IrDA/CIR functional muxing is selected (PINMUX1.UART2CTL = 10) ***and*** CRGEN0/1 are ***not*** enabled (PINMUX0.CRGMUX ≠ x01, 110), this pin is the UART2 CIR transmit data, URCTX2 (O/Z).
$\overline{\text{URTS2}}$/**UIRTX2**/ TS0_PSTIN/ GP[41]	AC20	I/O/Z	IPU DV_{DD33}	This pin is multiplexed between UART2, TSIF0, and GPIO. When UART2 IrDA/CIR functional muxing is selected (PINMUX1.UART2CTL = 10) ***and*** TSIF0 input is ***not*** enabled (PINMUX0.PTSIMUX = 0x), this pin is UART2 IrDA transmit data, UIRTX2 (O/Z).
$\overline{\text{UCTS2}}$/**USD2**/ CRG0_VCXI/ GP[42]/ TS1_PSTO	AC21	I/O/Z	IPU DV_{DD33}	This pin is multiplexed between UART2, CRGEN0, GPIO, and TSIF1. When UART2 IrDA/CIR functional muxing is selected (PINMUX1.UART2CTL = 10) ***and*** CRGEN0 on TSIF0 output is ***not*** enabled (PINMUX0.TSSOMUX = 0x), this pin is UART2 IrDA tranceiver control, USD2 (O/Z).

(1) IPD = Internal pulldown, IPU = Internal pullup. For more detailed information on pullup/pulldown resistors and situations where external pullup/pulldown resistors are required, see Section 4.8.1, *Pullup/Pulldown Resistors*.
(2) I = Input, O = Output, Z = High impedance, S = Supply voltage, GND = Ground, A = Analog signal
(3) Specifies the operating I/O supply voltage for each signal

Copyright © 2007–2012, Texas Instruments Incorporated

3.7.22 Pulse-Width Modulation (PWM)

Table 3-26. PWM Terminal Functions

SIGNAL NAME	NO.	TYPE(1)	OTHER(2)	DESCRIPTION
PWM0				
PWM0/ CRG0_PO/ TS1_ENAO	W17	O/Z	– DV_{DD33}	This pin is multiplexed between PWM0, CRGEN0, and TSIF1. When ***not*** overridden by CRGEN or TSIF1 output muxing (PINMUX0.CRGMUX ≠ 10x ***and*** PINMUX0.TSSOMUX ≠ 11), this pin is the pulse width modulation 0 output, PWM0 (O/Z).
PWM1				
PWM1/ TS1_DOUT	W18	O/Z	– DV_{DD33}	This pin is multiplexed between PWM1 and TSIF1. When ***not*** overridden by TSIF1 output muxing (PINMUX0.TSSOMUX ≠ 11), this pin is the pulse width modulation 1 output, PWM1 (O/Z).

(1) I = Input, O = Output, Z = High impedance, S = Supply voltage, GND = Ground, A = Analog signal
(2) Specifies the operating I/O supply voltage for each signal

Copyright © 2007–2012, Texas Instruments Incorporated

3.7.23 Timers (Timer 0, Timer 1, and Timer 2)

Table 3-27. Timer 0, Timer 1, and Timer 2 Terminal Functions

SIGNAL NAME	SIGNAL NO.	TYPE[1]	OTHER[2] [3]	DESCRIPTION
Timer 0				
TINP0L	Y7	I/O/Z	IPD DV_{DD33}	Timer0 lower input. This pin is the Timer0 input for 64-mode operation. For 32-bit timer operation, this pin is the input for the Timer0 lower 32-bit counter.
TINP0U	AA6	I/O/Z	IPD DV_{DD33}	Timer0 upper input. For 32-bit timer operation, this pin is the input for the Timer0 upper 32-bit counter. Not used for Timer0 64-mode operation.
TOUT0L	W8	I/O/Z	IPD DV_{DD33}	Timer0 lower output. This pin is the Timer0 output for 64-mode operation. For 32-bit timer operation, this pin is the output for the Timer0 lower 32-bit counter.
TOUT0U	W7	I/O/Z	IPD DV_{DD33}	Timer0 upper output. For 32-bit timer operation, this pin is the output for the Timer0 upper 32-bit counter. Not used for Timer0 64-mode operation.
Timer 1				
TINP1L	Y6	I/O/Z	IPD DV_{DD33}	Timer1 lower input. This pin is the Timer1 input for 64-mode operation. For 32-bit timer operation, this pin is the input for the Timer1 lower 32-bit counter.
TOUT1L	AA5	I/O/Z	IPD DV_{DD33}	Timer1 lower output. This pin is the Timer1 output for 64-mode operation. For 32-bit timer operation, this pin is the output for the Timer1 lower 32-bit counter.
TOUT1U	AB4	I/O/Z	IPD DV_{DD33}	Timer1 upper output. For 32-bit timer operation, this pin is the output for the Timer1 upper 32-bit counter. Not used for Timer1 64-mode operation.
WATCHDOG TIMER (Timer 2)				
TOUT2	Y5	I/O/Z	IPD DV_{DD33}	Watchdog timer output.

(1) I = Input, O = Output, Z = High impedance, S = Supply voltage, GND = Ground, A = Analog signal
(2) IPD = Internal pulldown, IPU = Internal pullup. For more detailed information on pullup/pulldown resistors and situations where external pullup/pulldown resistors are required, see Section 4.8.1, *Pullup/Pulldown Resistors*.
(3) Specifies the operating I/O supply voltage for each signal

Copyright © 2007–2012, Texas Instruments Incorporated

3.7.24 ATA

Table 3-28. ATA Terminal Functions

SIGNAL NAME	NO.	TYPE(1)	OTHER(2) (3)	DESCRIPTION
ATA				
ATA is enabled by the PINMUX0.ATAEN =1 (*and* PCIEN = 0). For more detailed information on the ATA pin muxing, see Section 4.7.3.1, *PCI, HPI, EMIFA, and ATA Pin Muxing*.				
PCI_CBE0/ **ATA_CS0** / GP[33]/EM_A[18]	F4	I/O/Z	IPU DV_{DD33}	This pin is multiplexed between PCI, ATA, GPIO, and EMIFA. When ATA is enabled, this pin is ATA chip select 0 output, ATA_CS0 (O/Z).
PCI_CBE1/ **ATA_CS1** / GP[32]/EM_A[19]	C2	I/O/Z	IPU DV_{DD33}	This pin is multiplexed between PCI, ATA, GPIO, and EMIFA. When ATA is enabled, this pin is ATA chip select 1 output, ATA_CS1 (O/Z).
PCI_RSV4/ **DIOW** / GP[20]/EM_WAIT4	A11	I/O/Z	IPU DV_{DD33}	This pin is multiplexed between PCI, ATA, GPIO, and EMIFA. When ATA is enabled, this pin is the ATA write strobe output, DIOW (O/Z).
PCI_RSV3/ **DIOR** / GP[19]/EM_WAIT5	E10	I/O/Z	IPU DV_{DD33}	This pin is multiplexed between PCI, ATA, GPIO, and EMIFA. When ATA is enabled, this pin is the ATA read strobe output, DIOR (O/Z).
PCI_RSV5/**IORDY**/ GP[21]/EM_WAIT3	D11	I/O/Z	IPU DV_{DD33}	This pin is multiplexed between PCI, ATA, GPIO, and EMIFA. When ATA is enabled, this pin is ATA I/O ready, IORDY (I).
PCI_RST/ **DA2**/ GP[13]/EM_A[22]	C10	I/O/Z	IPD DV_{DD33}	This pin is multiplexed between PCI, ATA, GPIO, and EMIFA. When ATA is enabled, this pin is ATA address bit 2, DA2 (O/Z).
PCI_RSV0/**DA1**/ GP[16]/EM_A[21]	A9	I/O/Z	IPD DV_{DD33}	This pin is multiplexed between PCI, ATA, GPIO, and EMIFA. When ATA is enabled, this pin is ATA address bit 1, DA1 (O/Z).
PCI_RSV1/**DA0**/ GP[17]/EM_A[20]	E9	I/O/Z	IPD DV_{DD33}	This pin is multiplexed between PCI, ATA, GPIO, and EMIFA. When ATA is enabled, this pin is ATA address bit 0, DA0 (O/Z).
PCI_RSV2/**INTRQ**/ GP[18]/EM_RSV0	B10	I/O/Z	IPD DV_{DD33}	This pin is multiplexed between PCI, ATA, GPIO, and EMIFA. When ATA is enabled, this pin is the ATA interrupt request input, INTRQ (I).
PCI_REQ/ **DMARQ**/ GP[11]/EM_CS5	B9	I/O/Z	IPU DV_{DD33}	This pin is multiplexed between PCI, ATA, GPIO, and EMIFA. When ATA is enabled, this pin is the ATA DMA request input, DMARQ (I).
PCI_GNT/ **DMACK** / GP[12]/EM_CS4	D10	I/O/Z	IPU DV_{DD33}	This pin is multiplexed between PCI, ATA, GPIO, and EMIFA. When ATA is enabled, this pin is the ATA DMA acknowledge output, DMACK (O/Z).
PCI_IDSEL/ **HDDIR**/ EM_R/W	E8	I/O/Z	IPU DV_{DD33}	This pin is multiplexed between PCI, ATA, and EMIFA. When ATA is enabled, this pin is the data direction indicator for external buffer control, HDDIR (O/Z).

(1) I = Input, O = Output, Z = High impedance, S = Supply voltage, GND = Ground, A = Analog signal
(2) IPD = Internal pulldown, IPU = Internal pullup. For more detailed information on pullup/pulldown resistors and situations where external pullup/pulldown resistors are required, see Section 4.8.1, *Pullup/Pulldown Resistors*.
(3) Specifies the operating I/O supply voltage for each signal

Copyright © 2007–2012, Texas Instruments Incorporated

Table 3-28. ATA Terminal Functions (continued)

SIGNAL NAME	NO.	TYPE[1]	OTHER[2] [3]	DESCRIPTION
PCI_AD31/ **DD15**/ HD31/ EM_A[15]	A8	I/O/Z	IPD DV_{DD33}	These pins are multiplexed between PCI, ATA, HPI, and EMIFA. When ATA is enabled, these pins are the ATA 16-bit bidirectional data bus, DD[15:0] (I/O/Z).
PCI_AD30/ **DD14**/ HD30/EM_A[14]	C9			
PCI_AD29/ **DD13**/ HD29/EM_A[13]	B8			
PCI_AD28/ **DD12**/ HD28/EM_A[12]	D9			
PCI_AD27/ **DD11**/ HD27/EM_A[11]	A6			
PCI_AD26/ **DD10**/ HD26/EM_A[10]	C8			
PCI_AD25/ **DD9**/ HD25/EM_A[9]	B6			
PCI_AD24/ **DD8**/ HD24/EM_A[8]	D8			
PCI_AD23/ **DD7**/ HD23/EM_A[7]	B5			
PCI_AD22/ **DD6**/ HD22/EM_A[6]	C7			
PCI_AD21/ **DD5**/ HD21/EM_A[5]	C5			
PCI_AD20/ **DD4**/ HD20/EM_A[4]	D7			
PCI_AD19/ **DD3**/ HD19/EM_A[3]	A4			
PCI_AD18/ **DD2**/ HD18/EM_A[2]	E7			
PCI_AD17/ **DD1**/ HD17/EM_A[1]	B4			
PCI_AD16/ **DD0**/ HD16/EM_A[0]	C6			

Copyright © 2007–2012, Texas Instruments Incorporated

3.7.25 General Purpose Input/Output (GPIO)

Table 3-29. General Purpose Input/Output (GPIO) Terminal Functions

SIGNAL NAME	NO.	TYPE(1)	OTHER(2) (3)	DESCRIPTION
GPIO				
The DM6467 device does not support GP[47:43], GP[35:34], GP[31:27], GP[15:14], and GP[9] signals (not pinned out). GP[7:0] pins have dedicated ARM926 and DSP interrupts. When PCI is used, GP[19:16] pins are reserved.				
GP[0]	W5	I/O/Z	IPD DV_{DD33}	GP[0] (I/O/Z). This pin is general-purpose input/output 0.
GP[1]	V5	I/O/Z	IPD DV_{DD33}	GP[1] (I/O/Z). This pin is general-purpose input/output 1.
GP[2]/ AUDIO_CLK1	AA4	I/O/Z	IPD DV_{DD33}	This pin is multiplexed between GPIO and the audio clock selector. When audio clock 1 is disabled (PINMUX0.AUDCK1 = 0), this pin is GP[2] (I/O/Z).
GP[3]/ AUDIO_CLK0	AB3	I/O/Z	IPD DV_{DD33}	This pin is multiplexed between GPIO and the audio clock selector. When audio clock 0 is disabled (PINMUX0.AUDCK0 = 0), this pin is GP[3] (I/O/Z).
GP[4]/ STC_CLKIN	AC3	I/O/Z	IPD DV_{DD33}	This pin is multiplexed between GPIO and the TSIF clock selector. When the STC source clock input is disabled (PINMUX0.STCCK = 0), this pin is GP[4] (I/O/Z).
GP[5]	B11	I/O/Z	IPD DV_{DD33}	This pin is GP[5] (I/O/Z).
GP[6]/ CVDDADJ0	E11	I/O/Z	IPD DV_{DD33}	This pin is multiplexed between GPIO and SmartReflex (Voltage Adjust) Control Outputs. When the core voltage adjust function is disabled (VP_DOUT7/VADJEN = 0 at reset), this pin is GP[6] (I/O/Z).
GP[7]/ CVDDADJ1	A12	I/O/Z	IPD DV_{DD33}	This pin is multiplexed between GPIO and SmartReflex (Voltage Adjust) Control Outputs. When the core voltage adjust function is disabled (VP_DOUT7/VADJEN = 0 at reset), this pin is GP[7] (I/O/Z).
$\overline{\text{URIN0}}$/**GP[8]**/ TS1_WAITIN	Y11	I/O/Z	IPD DV_{DD33}	This pin is multiplexed between UART0, GPIO, and TSIF1. When UART0 UART with modem functional muxing is ***not*** selected (PINMUX1.UART0CTL = 00) ***and*** TSIF1 output on UART/PWM muxing is ***not*** enabled (PINMUX0.TSSOMUX ≠ 11), this pin is GP[8] (I/O/Z).
GP[9]	n/a	–	–	GP[9] is ***not*** pinned out on this device.
PCI_CLK/**GP[10]**	A10	I/O/Z	IPU DV_{DD33}	This pin is multiplexed between PCI and GPIO. When PCI is disabled (PINMUX0.PCIEN = 0), this pin is GP[10] (I/O/Z).
$\overline{\text{PCI_REQ}}$/ DMARQ/ **GP[11]**/$\overline{\text{EM_CS5}}$	B9	I/O/Z	IPU DV_{DD33}	This pin is multiplexed between PCI, ATA, GPIO, and EMIFA. When 32-bit HPI mode is enabled (PINMUX0.PCIEN = 0, PINMUX0.HPIEN = 1, PINMUX0.ATAEN = 0), this pin is GP[11] (I/O/Z).
$\overline{\text{PCI_GNT}}$/ $\overline{\text{DMACK}}$/ **GP[12]**/$\overline{\text{EM_CS4}}$	D10	I/O/Z	IPU DV_{DD33}	This pin is multiplexed between PCI, ATA, GPIO, and EMIFA. When 32-bit HPI mode is enabled (PINMUX0.PCIEN = 0, PINMUX0.HPIEN = 1, PINMUX0.ATAEN = 0), this pin is GP[12] (I/O/Z).
$\overline{\text{PCI_RST}}$/ DA2/ **GP[13]**/EM_A[22]	C10	I/O/Z	IPD DV_{DD33}	This pin is multiplexed between PCI, ATA, GPIO, and EMIFA. When 32-bit HPI mode is enabled (PINMUX0.PCIEN = 0, PINMUX0.HPIEN = 1, PINMUX0.ATAEN = 0), this pin is GP[13] (I/O/Z).
GP[14:15]	n/a	–	–	GP[14:15] are ***not*** pinned out on this device.

(1) I = Input, O = Output, Z = High impedance, S = Supply voltage, GND = Ground, A = Analog signal
(2) IPD = Internal pulldown, IPU = Internal pullup. For more detailed information on pullup/pulldown resistors and situations where external pullup/pulldown resistors are required, see Section 4.8.1, *Pullup/Pulldown Resistors*.
(3) Specifies the operating I/O supply voltage for each signal

Copyright © 2007–2012, Texas Instruments Incorporated

Table 3-29. General Purpose Input/Output (GPIO) Terminal Functions (continued)

SIGNAL NAME	NO.	TYPE[1]	OTHER[2] [3]	DESCRIPTION
PCI_RSV0/DA1/ **GP[16]/** EM_A[21]	A9	I/O/Z	IPD DV_{DD33}	These pins are multiplexed between PCI, ATA, GPIO, and EMIFA. When 32-bit HPI mode is enabled (PINMUX0.PCIEN = 0, PINMUX0.HPIEN = 1, PINMUX0.ATAEN = 0), these pins are GP[16:19] (I/0/Z). When PCI mode is enabled (PINMUX0.PCIEN = 1), these pins are reserved.
PCI_RSV1/DA0/ **GP[17]/**EM_A[20]	E9	I/O/Z	IPD DV_{DD33}	
PCI_RSV2/ INTRQ/ **GP[18]/** EM_RSV0	B10	I/O/Z	IPD DV_{DD33}	
PCI_RSV3/$\overline{\text{DIOR}}$/ **GP[19]/** EM_WAIT5	E10	I/O/Z	IPU DV_{DD33}	
PCI_RSV4/ $\overline{\text{DIOW}}$/ **GP[20]/** EM_WAIT4	A11	I/O/Z	IPU DV_{DD33}	These pins are multiplexed between PCI, ATA, GPIO, and EMIFA. When 32-bit HPI mode is enabled (PINMUX0.PCIEN = 0, PINMUX0.HPIEN = 1, PINMUX0.ATAEN = 0), these pins are GP[20:21] (I/0/Z).
PCI_RSV5/ IORDY/ **GP[21]/** EM_WAIT3	D11	I/O/Z	IPU DV_{DD33}	
USB_DRVVBUS/ **GP[22]**	B18	I/O/Z	IPD DV_{DD33}	This pin is multiplexed between USB and GPIO. When ***not*** used for USB (PINMUX0.VBUSDIS = 1), this pin is GP[22] (I/O/Z).
URXD1/ TS0_DIN7/ **GP[23]**	Y18	I/O/Z	IPD DV_{DD33}	This pin is multiplexed between UART1, TSIF0, and GPIO. When UART1 GPIO muxing ***is*** selected (PINMUX1.UART1CTL = 11) ***and*** TSIF0 serial input is ***not*** enabled (PINMUX0.PTSIMUX ≠ 11), this pin is GP[23] (I/O/Z).
UTXD1/ URCTX1/ TS0_DOUT7/ **GP[24]**	AB19	I/O/Z	IPD DV_{DD33}	This pin is multiplexed between UART1, TSIF0, and GPIO. When UART1 GPIO muxing ***is*** selected (PINMUX1. UART1CTL = 11) ***and*** TSIF0 serial input is ***not*** enabled (PINMUX0.PTSIMUX ≠ 11), this pin is GP[24] (I/O/Z).
$\overline{\text{URTS1}}$/ UIRTX1/ TS0_WAITO/ **GP[25]**	AA18	I/O/Z	IPD DV_{DD33}	These pins are multiplexed between UART1, TSIF0, and GPIO. When UART1 GPIO muxing ***is*** selected (PINMUX1.UART1CTL = 11) ***and*** TSIF0 input is ***not*** enabled (PINMUX0.PTSIMUX = 0x), these pins are GP[25:26] (I/O/Z).
$\overline{\text{UCTS1}}$/USD1/ TS0_EN_WAITO/ **GP[26]**	Y17	I/O/Z	IPU DV_{DD33}	
GP[27:31]	n/a	–	–	GP[27:31] are ***not*** pinned out on this device.
$\overline{\text{PCI_CBE1}}$/ $\overline{\text{ATA_CS1}}$/ **GP[32]/** EM_A[19]	C2	I/O/Z	IPU DV_{DD33}	These pins are multiplexed between PCI, ATA, GPIO, and EMIFA. When 32-bit HPI mode is enabled (PINMUX0.PCIEN = 0, PINMUX0.HPIEN = 1, PINMUX0.ATAEN = 0), these pins are GP[32:33] (I/O/Z).
$\overline{\text{PCI_CBE0}}$/ $\overline{\text{ATA_CS0}}$/ **GP[33]/** EM_A[18]	F4	I/O/Z	IPU DV_{DD33}	
GP[34:35]	n/a	–	–	GP[34:35] are ***not*** pinned out on this device.
$\overline{\text{UDTR0}}$/ TS0_ENAO/ **GP[36]**	Y12	I/O/Z	IPU DV_{DD33}	These pins are multiplexed between UART0, TSIF0, and GPIO. When UART0 UART with modem functional muxing is ***not*** selected (PINMUX1.UART0CTL ≠ 00) ***and*** TSIF0 output muxing is ***not*** enabled (PINMUX0.PTSOMUX ≠ 1x), these pins are GP[36:38] (I/O/Z).
$\overline{\text{UDSR0}}$/ TS0_PSTO/ **GP[37]**	AB11	I/O/Z	IPU DV_{DD33}	
$\overline{\text{UDCD0}}$/ TS0_WAITIN/ **GP[38]**	AA11	I/O/Z	IPU DV_{DD33}	

Copyright © 2007–2012, Texas Instruments Incorporated

Table 3-29. General Purpose Input/Output (GPIO) Terminal Functions (continued)

SIGNAL NAME	SIGNAL NO.	TYPE[1]	OTHER[2] [3]	DESCRIPTION
URXD2/ CRG1_VCXI/ **GP[39]**/ CRG0_VCXI	AB20	I/O/Z	IPD DV_{DD33}	These pins are multiplexed between UART2, CRGEN1, GPIO, and CRGEN0. When UART2 UART GPIO muxing ***is*** selected (PINMUX1.UART2CTL = 11) ***and*** CRGEN0/1 are ***not*** enabled (PINMUX0.CRGMUX ≠ x01, 110), these pins are GP[39:40] (I/O/Z).
UTXD2/URCTX2/ CRG1_PO/ **GP[40]**/ CRG0_PO	AA19	I/O/Z	IPD DV_{DD33}	
$\overline{\text{URTS2}}$/UIRTX2/ TS0_PSTIN/ **GP[41]**	AC20	I/O/Z	IPU DV_{DD33}	This pin is multiplexed between UART2, TSIF0, and GPIO. When UART2 UART without flow control or GPIO muxing ***is*** selected (PINMUX1.UART2CTL = x1) ***and*** TSIF0 input is ***not*** enabled (PINMUX0.PTSIMUX = 0x), this pin is GP[41] (I/O/Z).
$\overline{\text{UCTS2}}$/USD2/ CRG0_VCXI/ **GP[42]**/ TS1_PSTO	AC21	I/O/Z	IPU DV_{DD33}	This pin is multiplexed between UART2, CRGEN0, GPIO, and TSIF1. When UART2 UART without flow control or GPIO muxing ***is*** selected (PINMUX1.UART2CTL = x1) ***and*** CRGEN0 on UART2/PWM muxing is ***not*** enabled (PINMUX0.CRGMUX ≠ 10x) ***and*** TSIF1 output is ***not*** enabled (PINMUX0.TSSOMUX = 0x), this pin is GP[42] (I/O/Z).
GP[43:47]	n/a	–	–	GP[43:47] are ***not*** pinned out on this device.

Copyright © 2007–2012, Texas Instruments Incorporated

3.7.26 Reserved

Table 3-30. Reserved Terminal Functions

SIGNAL NAME	SIGNAL NO.	TYPE(1)	OTHER	DESCRIPTION
RESERVED				
RSV1	A1			Reserved. For proper device operation, this pin **must** be tied directly to V_{SS}.
RSV2	A2			Reserved. For proper device operation, this pin **must** be tied directly to V_{SS}.
RSV3	A22			Reserved. For proper device operation, this pin **must** be tied directly to V_{SS}.
RSV4	A23			Reserved. (Leave unconnected, ***do not*** connect to power or ground.)
RSV5	D14			Reserved. (Leave unconnected, ***do not*** connect to power or ground.)
RSV6	F17			Reserved. For proper device operation, this pin **must** be tied directly to CV_{DD}.
RSV7	G16			Reserved. For proper device operation, this pin **must** be tied directly to CV_{DD}.

(1) I = Input, O = Output, Z = High impedance, S = Supply voltage, GND = Ground, A = Analog signal

Copyright © 2007–2012, Texas Instruments Incorporated

3.7.27 Supply

Table 3-31. Supply Terminal Functions

SIGNAL NAME	NO.	TYPE(1)	OTHER	DESCRIPTION
SUPPLY VOLTAGE PINS				
DV_{DD33}	B7	S		3.3-V I/O supply voltage (see the Power-Supply Decoupling section of this data manual)
	F8			
	F9			
	F10			
	F11			
	F12			
	F13			
	F14			
	F15			
	F16			
	G7			
	H6			
	J6			
	K6			
	K7			
	M3			
	R7			
	T7			
	U7			
	V7			
	V8			
	V17			
	W9			
	W10			
	W11			
	W12			
	W13			
	W14			
	W15			
	W16			
	AA12			
DV_{DDR2}	B20	S		1.8-V DDR2 I/O supply voltage (see the Power-Supply Decoupling section of this data manual)
	E21			
	G17			
	G19			
	H17			
	J17			
	K17			
	K21			
	P21			
	R17			

(1) I = Input, O = Output, Z = High impedance, S = Supply voltage, GND = Ground, A = Analog signal

Copyright © 2007–2012, Texas Instruments Incorporated

Table 3-31. Supply Terminal Functions (continued)

SIGNAL NAME	NO.	TYPE[1]	OTHER	DESCRIPTION
DV_{DDR2}	R18	S		1.8-V DDR2 I/O supply voltage (see the Power-Supply Decoupling section of this data manual)
	T18			
	T19			
	U19			
	W21			
	AA20			
CV_{DD}	G8	S		1.20-V core supply voltage (-594, -594A, -729 devices) (see the Power-Supply Decoupling section of this data manual) **SmartReflex:** when selected (VP_DOUT7/VADJEN = 1 at reset), the GP[7]/CVDDADJ1 and GP[6]/CVDDADJ0 pins function as SmartReflex Control Outputs to the adjustable core power supply. For more detailed information on SmartReflex, see the Section 7.3.6, *SmartReflex (Voltage Scaling)*. 1.2-V core supply voltage (-594V, -594AV *only*) [GP[7]/CVDDADJ1 and GP[6]/CVDDADJ0 = 00] 1.05-V core supply voltage (-594V, -594AV *only*) [GP[7]/CVDDADJ1 and GP[6]/CVDDADJ0 = 11]
	G9			
	G10			
	G11			
	G12			
	G13			
	G14			
	G15			
	H7			
	H8			
	H9			
	H14			
	H15			
	H16			
	J7			
	J8			
	J9			
	J10			
	J11			
	J13			
	J14			
	J15			
	J16			
	K8			
	K9			
	K10			
	K11			
	K13			
	K14			
	K15			
	K16			
	P7			
	P8			
	P9			
	P10			
	P11			
	P13			
	P14			
	P15			

Copyright © 2007–2012, Texas Instruments Incorporated

Table 3-31. Supply Terminal Functions (continued)

SIGNAL NAME	SIGNAL NO.	TYPE[1]	OTHER	DESCRIPTION
CV_{DD}	R8	S		1.20-V core supply voltage (-594, -594A, -729 devices) (see the Power-Supply Decoupling section of this data manual) **SmartReflex:** when selected (VP_DOUT7/VADJEN = 1 at reset), the GP[7]/CVDDADJ1 and GP[6]/CVDDADJ0 pins function as SmartReflex Control Outputs to the adjustable core power supply. For more detailed information on SmartReflex, see the Section 7.3.6, *SmartReflex (Voltage Scaling)*. 1.2-V core supply voltage (-594V, -594AV *only*) [GP[7]/CVDDADJ1 and GP[6]/CVDDADJ0 = 00] 1.05-V core supply voltage (-594V, -594AV *only*) [GP[7]/CVDDADJ1 and GP[6]/CVDDADJ0 = 11]
	R9			
	R10			
	R11			
	R13			
	R14			
	R15			
	T8			
	T9			
	T10			
	T11			
	T13			
	T14			
	T15			
	U8			
	U9			
	U10			
	U14			
	U15			
	U16			
	V9			
	V10			
	V11			
	V12			
	V13			
	V14			
	V15			
	V16			

Copyright © 2007–2012, Texas Instruments Incorporated

3.7.28 Ground

Table 3-32. Ground Terminal Functions

SIGNAL NAME	NO.	TYPE(1)	OTHER	DESCRIPTION
GROUND PINS				
V_{SS}	A7	GND		Ground pins
	A14			
	A18			
	A21			
	B1			
	B19			
	B23			
	C19			
	D19			
	E19			
	E22			
	F6			
	F7			
	F19			
	G6			
	G18			
	H5			
	H10			
	H11			
	H12			
	H13			
	H18			
	H19			
	J5			
	J12			
	J18			
	K5			
	K12			
	K18			
	K22			
	L5			
	L6			
	L7			
	L8			
	L9			
	L10			

(1) I = Input, O = Output, Z = High impedance, S = Supply voltage, GND = Ground, A = Analog signal

Copyright © 2007–2012, Texas Instruments Incorporated

Table 3-32. Ground Terminal Functions (continued)

SIGNAL NAME	NO.	TYPE[1]	OTHER	DESCRIPTION
V_{SS}	L11	GND		Ground pins
	L12			
	L13			
	L14			
	L15			
	L16			
	L17			
	L18			
	M2			
	M5			
	M6			
	M7			
	M8			
	M9			
	M10			
	M11			
	M12			
	M13			
	M14			
	M15			
	M16			
	M17			
	M18			
	N5			
	N6			
	N7			
	N8			
	N9			
	N10			
	N11			
	N12			
	N13			
	N14			
	N15			
	N16			
	N17			
	N18			
	P6			
	P12			
	P16			
	P17			
	P18			
	P22			
	R6			
	R12			
	R16			

Copyright © 2007–2012, Texas Instruments Incorporated

Table 3-32. Ground Terminal Functions (continued)

SIGNAL NAME	NO.	TYPE[1]	OTHER	DESCRIPTION
V_{SS}	T6	GND		Ground Pins
	T12			
	T16			
	T17			
	U6			
	U11			
	U12			
	U13			
	U17			
	U18			
	V6			
	V18			
	V19			
	W19			
	W22			
	Y19			
	AB1			
	AB12			
	AB21			
	AB23			
	AC1			
	AC2			
	AC22			
	AC23			

Copyright © 2007–2012, Texas Instruments Incorporated

3.8 Device Support

3.8.1 Development Support

TI offers an extensive line of development tools for the TMS320DM646x DMSoC platform, including tools to evaluate the performance of the processors, generate code, develop algorithm implementations, and fully integrate and debug software and hardware modules. The tool's support documentation is electronically available within the Code Composer Studio™ Integrated Development Environment (IDE).

The following products support development of TMS320DM646x SoC-based applications:

Software Development Tools:

Code Composer Studio™ Integrated Development Environment (IDE): including Editor

C/C++/Assembly Code Generation, and Debug plus additional development tools

Scalable, Real-Time Foundation Software (DSP/BIOS™), which provides the basic run-time target software needed to support any SoC application.

Hardware Development Tools:

Extended Development System (XDS™) Emulator

For a complete listing of development-support tools for the TMS320DM644x DMSoC platform, visit the Texas Instruments web site on the Worldwide Web at http://www.ti.com uniform resource locator (URL). For information on pricing and availability, contact the nearest TI field sales office or authorized distributor.

3.8.2 Device and Development-Support Tool Nomenclature

To designate the stages in the product development cycle, TI assigns prefixes to the part numbers of all DSP devices and support tools. Each DSP commercial family member has one of three prefixes: TMX, TMP, or TMS (e.g.,TMX320DM6467CCUT7). Texas Instruments recommends two of three possible prefix designators for its support tools: TMDX and TMDS. These prefixes represent evolutionary stages of product development from engineering prototypes (TMX/TMDX) through fully qualified production devices/tools (TMS/TMDS).

Device development evolutionary flow:

TMX Experimental device that is not necessarily representative of the final device's electrical specifications.

TMP Final silicon die that conforms to the device's electrical specifications but has not completed quality and reliability verification.

TMS Fully-qualified production device.

Support tool development evolutionary flow:

TMDX Development-support product that has not yet completed Texas Instruments internal qualification testing.

TMDS Fully qualified development-support product.

TMX and TMP devices and TMDX development-support tools are shipped against the following disclaimer:

"Developmental product is intended for internal evaluation purposes."

TMS devices and TMDS development-support tools have been characterized fully, and the quality and reliability of the device have been demonstrated fully. TI's standard warranty applies.

Copyright © 2007–2012, Texas Instruments Incorporated

Predictions show that prototype devices (TMX or TMP) have a greater failure rate than the standard production devices. Texas Instruments recommends that these devices not be used in any production system because their expected end-use failure rate still is undefined. Only qualified production devices are to be used.

TI device nomenclature also includes a suffix with the device family name. This suffix indicates the package type (for example, CUT), the temperature range (for example, "Blank" is the commercial temperature range), and the device speed range in megahertz (for example, "Blank" is the default [594-MHz DSP, 297-MHz ARM9]).

Figure 3-8 provides a legend for reading the complete device name for any TMS320DM646x DMSoC platform member.

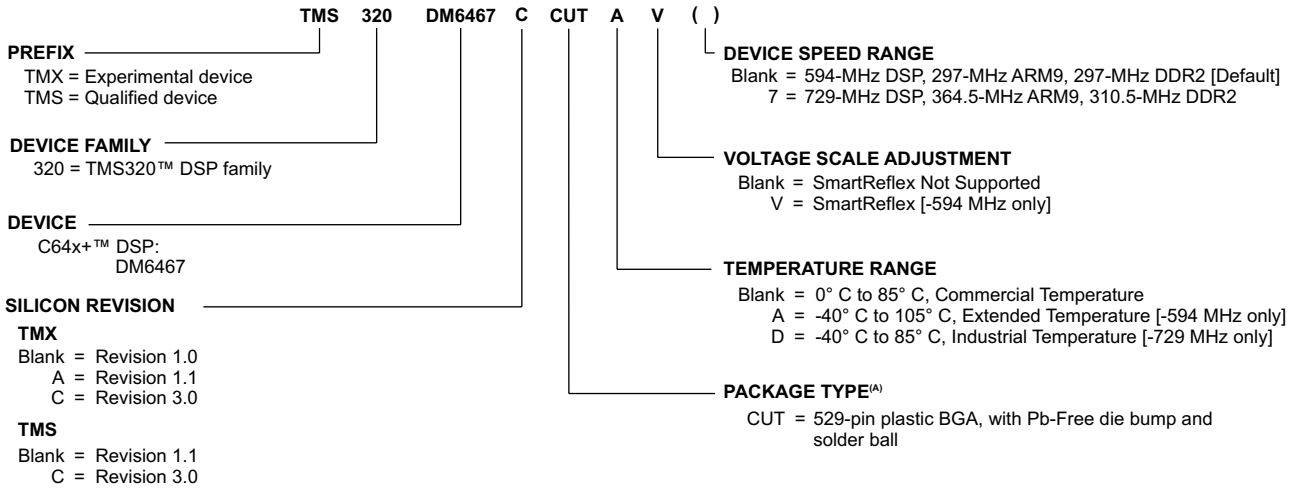

A. BGA = Ball Grid Array

B. For actual device part numbers (P/Ns) and ordering information, see the TI website (http://www.ti.com).

Figure 3-8. Device Nomenclature(B)

3.9 Documentation Support

3.9.1 Related Documentation From Texas Instruments

The following documents describe the TMS320DM646x Digital Media System-on-Chip (DMSoC). Copies of these documents are available on the Internet at www.ti.com. *Tip:* Enter the literature number in the search box provided at www.ti.com.

The current documentation that describes the DM646x DMSoC, related peripherals, and other technical collateral, is available in the C6000 DSP product folder at: www.ti.com/c6000.

SPRUEP8 ***TMS320DM646x DMSoC DSP Subsystem Reference Guide.*** Describes the digital signal processor (DSP) subsystem in the TMS320DM646x Digital Media System-on-Chip (DMSoC).

SPRUEP9 ***TMS320DM646x DMSoC ARM Subsystem Reference Guide.*** Describes the ARM subsystem in the TMS320DM646x Digital Media System-on-Chip (DMSoC). The ARM subsystem is designed to give the ARM926EJ-S (ARM9) master control of the device. In general, the ARM is responsible for configuration and control of the device; including the DSP subsystem and a majority of the peripherals and external memories.

SPRUEQ0 ***TMS320DM646x DMSoC Peripherals Overview Reference Guide.*** Provides an overview and briefly describes the peripherals available on the TMS320DM646x Digital Media System-on-Chip (DMSoC).

SPRAA84 ***TMS320C64x to TMS320C64x+ CPU Migration Guide.*** Describes migrating from the Texas Instruments TMS320C64x digital signal processor (DSP) to the TMS320C64x+ DSP. The objective of this document is to indicate differences between the two cores. Functionality in the devices that is identical is not included.

SPRU732 ***TMS320C64x/C64x+ DSP CPU and Instruction Set Reference Guide.*** Describes the CPU architecture, pipeline, instruction set, and interrupts for the TMS320C64x and TMS320C64x+ digital signal processors (DSPs) of the TMS320C6000 DSP family. The C64x/C64x+ DSP generation comprises fixed-point devices in the C6000 DSP platform. The C64x+ DSP is an enhancement of the C64x DSP with added functionality and an expanded instruction set.

SPRU871 ***TMS320C64x+ DSP Megamodule Reference Guide.*** Describes the TMS320C64x+ digital signal processor (DSP) megamodule. Included is a discussion on the internal direct memory access (IDMA) controller, the interrupt controller, the power-down controller, memory protection, bandwidth management, and the memory and cache.

SPRAAV0 ***Understanding TI's PCB Routing Rule-Based DDR Timing Specification Application Report*** This application report describes the way the DDR high-speed timing requirements are now going to be communicated to system designers. The system designer uses this information to evaluate whether timing specifications are met and can be expected to operate reliably.

SPRAAZ2 ***Enabling SmartReflex on the TMS320DM6467 Application Report*** This application report describes the basic concepts of SmartReflex™ technology implemented in the DM6467 device. The goal for implementing this technology and the expected benefits are detailed, and a reference design of the SmartReflex feature is introduced.

3.10 Community Resources

The following links connect to TI community resources. Linked contents are provided "AS IS" by the respective contributors. They do not constitute TI specifications and do not necessarily reflect TI's views; see TI's Terms of Use.

TI E2E Community ***TI's Engineer-to-Engineer (E2E) Community.*** Created to foster collaboration among engineers. At e2e.ti.com, you can ask questions, share knowledge, explore ideas and help solve problems with fellow engineers.

Copyright © 2007–2012, Texas Instruments Incorporated

TI Embedded Processors Wiki ***Texas Instruments Embedded Processors Wiki.*** Established to help developers get started with Embedded Processors from Texas Instruments and to foster innovation and growth of general knowledge about the hardware and software surrounding these devices.

Copyright © 2007–2012, Texas Instruments Incorporated

4 Device Configurations

4.1 System Module Registers

The system module includes status and control registers for configuration of the device.Brief descriptions of the various registers are shown in Table 4-1. System Module registers required for device configurations are discussed in the following sections.

Table 4-1. System Module Register Memory Map

HEX ADDRESS RANGE	REGISTER ACRONYM	DESCRIPTION
0x01C4 0000	PINMUX0	Pin Multiplexing Control 0 (see Section 4.7.2.1, *PINMUX0 Register*).
0x01C4 0004	PINMUX1	Pin Multiplexing Control 1 (see Section 4.7.2.2, *PINMUX1 Register*).
0x01C4 0008	DSPBOOTADDR	DSP Boot Address. Decoded by bootloader software for host boots. (See Section 4.4.2.1, *DSPBOOTADDR Register*.)
0x01C4 000C	SUSPSRC	Emulator Suspend Source (see Section 4.7.3.13, *Emulation Control*).
0x01C4 0010	BOOTSTAT	Boot Status (see Section 4.4.2.2, *BOOTSTAT Register*).
0x01C4 0014	BOOTCFG	Device Boot Configuration (see Section 4.4.2.3, *BOOTCFG Register*).
0x01C4 0018	SMTREFLEX	SmartReflex Status (see Figure 7-7, *SMTREFLEX Status Register*). [Voltage Scale Adjustment (V) parts *only*]
0x01C4 001C - 0x01C4 0020	–	Reserved
0x01C4 0024	ARMBOOT	ARM926 Boot Control (see Section 4.4.2.4, *ARMBOOT Register*).
0x01C4 0028	JTAGID	Device ID Number [see Section 7.29.1, *JTAG ID (JTAGID) Register Description(s)*].
0x01C4 002C	–	Reserved
0x01C4 0030	HPICTL	HPI Control (see Section 4.6.2.1, *HPICTL Register*).
0x01C4 0034	USBCTL	USB Control (see Section 4.6.2.2, *USBCTL Register*).
0x01C4 0038	VIDCLKCTL	Video Clock Control (see Section 4.3.2.1, *Video Clock Control*).
0x01C4 003C	MSTPRI0	Bus Master Priority Control 0 (see Section 4.6.1, Switch Central Resource (SCR) Bus Priorities).
0x01C4 0040	MSTPRI1	Bus Master Priority Control 1 (see Section 4.6.1, Switch Central Resource (SCR) Bus Priorities).
0x01C4 0044	MSTPRI2	Bus Master Priority Control 2 (see Section 4.6.1, Switch Central Resource (SCR) Bus Priorities).
0x01C4 0048	VDD3P3V_PWDN	V_{DD} 3.3-V I/O Powerdown Control (see Section 4.2, *Power Considerations*).
0x01C4 004C	–	Reserved
0x01C4 0050	TSIFCTL	TSIF Control Register (see Section 4.3.2.2, *TSIF Control*).
0x01C4 0054	PWMCTL	PWM Control (see Section 4.6.2.3, *PWM (Trigger Source) Control Register*).
0x01C4 0058	EDMATCCFG	EDMA TC Configuration (see Section 4.6.2.4, *EDMATCCFG Register*).
0x01C4 005C	CLKCTL	Oscillator and Output Clock Control (see Section 4.3.3, *Clock and Oscillator Control*).
0x01C4 0060	DSPINT	ARM to DSP Interrupt Status (see Section 4.7.3.12, *ARM/DSP Communications Interrupts*).
0x01C4 0064	DSPINTSET	ARM to DSP Interrupt Set (see Section 4.7.3.12, *ARM/DSP Communications Interrupts*).
0x01C4 0068	DSPINTCLR	ARM to DSP Interrupt Clear (see Section 4.7.3.12, *ARM/DSP Communications Interrupts*).
0x01C4 006C	VSCLKDIS	Video and TSIF Clock Disable (see Section 4.3.2.3, *Video and TSIF Clock Disable*).
0x01C4 0070	ARMINT	DSP to ARM Interrupt Status (see Section 4.7.3.12, *ARM/DSP Communications Interrupts*).
0x01C4 0074	ARMINTSET	DSP to ARM Interrupt Set (see Section 4.7.3.12, *ARM/DSP Communications Interrupts*).

Copyright © 2007–2012, Texas Instruments Incorporated

Table 4-1. System Module Register Memory Map (continued)

HEX ADDRESS RANGE	REGISTER ACRONYM	DESCRIPTION
0x01C4 0078	ARMINTCLR	DSP to ARM Interrupt Clear (see Section 4.7.3.12, *ARM/DSP Communications Interrupts*).
0x01C4 007C	ARMWAIT	ARM Memory Wait State Control (see Section 4.4.2.5, *ARMWAIT Register*).
0x01C4 0080 - 0x01C4 03FF	–	Reserved

Copyright © 2007–2012, Texas Instruments Incorporated

4.2 Power Considerations

The DM6467 provides several means of managing power consumption.

As described in the Section 7.3.4, *DM6467 Power and Clock Domains*, the DM6467 has one single power domain—the "Always On" power domain. Within this power domain, the DM6467 utilizes local clock gating via the Power and Sleep Controller (PSC) to achieve power savings. For more details on the PSC, see Section 7.3.5, *Power and Sleep Controller (PSC)* and the *TMS320DM646x DMSoC ARM Subsystem* Reference Guide (literature number SPRUEP9).

Some of the DM6467 peripherals support additional power saving features. For more details on power saving features supported, see the peripheral-specific reference guides [listed/linked in the *TMS320DM646x DMSoC Peripherals Overview* Reference Guide (literature number SPRUEQ0).

Most DM6467 3.3-V I/Os can be powered-down to reduce power consumption. The VDD3P3V_PWDN register in the System Module (see Figure 4-1) is used to selectively power down unused 3.3-V I/O pins.

Note: To save power, all other I/O buffers are powered down by default. Before using these pins, the user ***must*** program the VDD3P3V_PWDN register to power up the corresponding I/O buffers.

For a list of multiplexed pins on the device and the pin mux group each pin belongs to, see Section 4.7.3, *Pin Multiplexing Details*.

Note: The VDD3P3V_PWDN register *only* controls the power to the I/O buffers. The Power and Sleep Controller (PSC) determines the clock/power state of the peripheral.

31	29	28	27	26	25	24	23	22	21	20	19	18	17	16
RESERVED		USBV	CLKOUT	RSV	SPI	VLYNQ	RESERVED		GMII	MII	MCASP1	MCASP0	PCIHPI1	PCIHPI0
R-000		R/W-1	R/W-0	R-0	R/W-1	R/W-1	R-00		R/W-1	R/W-1	R/W-1	R/W-1	R/W-0	R/W-0

15	14	13	12	11	10	9	8	7	6	5	4	3	2	1	0
GPIO	WDTIM	TIM23	TIM01	PWM1	PWM0	UR2FC	UR2DAT	UR1FC	UR1DAT	UR0MDM	UR0DF	VPIF3	VPIF2	VPIF1	VPIF0
R/W-0	R/W-0	R/W-1	R/W-1	R/W-1	R/W-1	R/W-1	R/W-1	R/W-1	R/W-1	R/W-1	R/W-1	R/W-1	R/W-0	R/W-1	R/W-1

LEGEND: R/W = Read/Write; R = Read only; -*n* = value after reset

Figure 4-1. VDD3P3V_PWDN Register [0x01C4 0048]

Copyright © 2007–2012, Texas Instruments Incorporated

Table 4-2. VDD3P3V_PWDN Register Bit Descriptions

BIT	NAME	DESCRIPTION
31:29	RESERVED	Reserved. Read returns "0".
28	USBV	USB_DRVVBUS Powerdown Control. 0 = I/O cells powered up. 1 = I/O cells powered down. This bit controls the USB_DRVVBUS/GP[22] pin.
27	CLKOUT	CLKOUT0 Powerdown Control. This bit controls the CLKOUT0 pin.
26	RSV	Reserved. Read returns "0".
25	SPI	SPI Powerdown Control. This bit controls the six SPI interface pins: SPI_CLK, SPI_EN, SPI_CS0, SPI_CS1, SPI_SOMI, and SPI_SIMO.
24	VLYNQ	VLYNQ Powerdown Control. This bit controls the ten VLYNQ interface pins: VLYNQ_CLOCK, VLYNQ_SCRUN, VLYNQ_TXD[3:0], and VLYNQ_RXD[3:0].
23:22	RESERVED	Reserved. Read returns "0".
21	GMII	GMII Powerdown Control. This bit controls the ten pins used by GMII (Gigabit) only: RFTCLK, GMTCLK, MTXD[7:4], and MRXD[7:4].
20	MII	MII Powerdown Control. This bit controls the 17 pins used by (G)MII (10/100/1000) and MDIO interfaces: MTCLK, MTXD[3:0], MTXEN, MCOL, MCRS, MRCLK, MRXD[3:0], MRXDV, MRXER, MDCLK, and MDIO.
19	MCASP1	McASP1 Powerdown Control. This bit controls the three McASP1 pins: ACLKX1, AHCLKX1, and AXR1[0].
18	MCASP0	McASP0 Powerdown Control. This bit controls the 12 McASP0 pins: ACLKR0, AHCLKR0, AFSR0, ACLKX0, AHCLKX0, AFSX0, AXR0[3:0], AMUTE0, and AMUTEIN0.
17	PCIHPI1	PCI/HPI/EMIFA/ATA Powerdown Control. This bit controls the 28 pins used by the ATA or PCI`, HPI, or EMIFA. These pins include: PCI_RST/DA2/GP[13]/EM_A[22], PCI_IDSEL/HDDIR/EM_R/W, PCI_REQ/DMARQ/GP[11]/EM_CS5, PCI_GNT/DMACK/GP[12]/EM_CS4, PCI_CBE1/ATA_CS1/GP[32]/EM_A[19], PCI_CBE0/ATA_CS0/GP[33]/EM_A[18], DIOW/GP[20]/EM_WAIT4/(RDY4/BSY4), IORDY/GP[21]/EM_WAIT3/(RDY3/BSY3), DIOR/GP[19]/EM_WAIT5/(RDY5/BSY5), DA1/GP[16]/EM_A[21], DA0/GP[17]/EM_A[20], INTRQ/GP[18]/RSV , PCI_AD[31:16]/DD[15:0]/HD[31:16]/EM_A[15:0] Defaults to powered up for NOR boot.
16	PCIHPI0	PCI/HPI/EMIFA Powerdown Control. This bit controls the 28 pins used by PCI, HPI, or EMIFA but not shared with ATA. These pins include: PCI_CLK/GP[10], PCI_DEVSEL/HCNTL1/EM_BA[1], PCI_FRAME/HINT/EM_BA[0], PCI_IRDY/HRDY/EM_A[17]/(CLE), PCI_TRDY/HHWIL/EM_A[16]/(ALE), PCI_STOP/HCNTL0/EM_WE, PCI_SERR/HDS1/EM_OE, PCI_PERR/HCS/EM_DQM1, PCI_PAR/HAS/EM_DQM0, PCI_INTA/EM_WAIT2/(RDY2/BSY2), PCI_CBE3/HR/W/EM_CS3, PCI_CBE2/HDS2/EM_CS2, PCI_AD[15:0]/HD[15:0]/EM_D[15:0] Defaults to powered up for NOR boot.
15	GPIO	GPIO Powerdown Control. This bit controls the eight GP[7:0] pins. Defaults to powered up.
14	WDTIM	WD Timer Powerdown Control. This bit controls the WD Timer pin TOUT2.
13	TIM23	Timer1 Powerdown Control. This bit controls the three Timer1 pins TINP1L, TOUT1L, and TOUT1U.
12	TIM01	Timer0 Powerdown Control. This bit controls the four Timer0 pins TINP0L, TINP0U, TOUT0L, and TOUT0U.
11	PWM1	PWM1 Powerdown Control. This bit controls the PWM1/TS1_DOUT pin.
10	PWM0	PWM0 Powerdown Control. This bit controls the PWM0/CRG0_PO/TS1_ENAO pin.
9	UR2FC	UART2 Flow Control Powerdown Control. This bit controls the URTS2/UIRTX2/TS0_PSTIN/GP[41] and UCTS2/USD2/CRG0_VCXI/GP[42]/TS1_PSTO pins.

Copyright © 2007–2012, Texas Instruments Incorporated

Table 4-2. VDD3P3V_PWDN Register Bit Descriptions (continued)

BIT	NAME	DESCRIPTION
8	UR2DAT	UART2 Data Powerdown Control. This bit controls the URXD2/CRG1_VCXI/GP[39]/CRG0_VCXI and UTXD2/URCTX2/CRG1_PO/GP[40]/CRG0_PO pins.
7	UR1FC	UART1 Flow Control Powerdown Control. This bit controls the URTS1/UIRTX1/TS0_WAITO/GP[25] and UCTS1/USD1/TS0_EN_WAITO/GP[26] pins.
6	UR1DAT	UART1 Data Powerdown Control. This bit controls the URXD1/TS0_DIN7/GP[23] and UTXD1/URCTX1/TS0_DOUT7/GP[24] pins.
5	UR0MDM	UART0 Modem Control Powerdown Control. This bit controls the UDTR0/TS0_ENAO/GP[36], UDSR0/TS0_PSTO/GP[37], UDCD0/TS0_WAITIN/GP[38], and URIN0/GP[8]/TS1_WAITIN pins.
4	UR0DF	UART0 Data and Flow Control Powerdown Control. This bit controls the URXD0/TS1_DIN, UTXD0/URCTX0/TS1_PSTIN, URTS0/UIRTX0/TS1_EN_WAITO, and UCTS0/USD0 pins.
3	VPIF3	VPIF MSB Output Powerdown Control. This bit controls the VP_DOUT[15:8]/TS1_xx, VP_CLKIN3/TS1_CLKO, and VP_CLKO3/TS0_CLKO pins.
2	VPIF2	VPIF LSB Output Powerdown Control. This bit controls the VP_DOUT[7:0], VP_CLKIN2, and VP_CLKO2 pins. (VP_DOUT[7:0] are boot configuration inputs.)
1	VPIF1	VPIF MSB Input Powerdown Control. This bit controls the VP_DIN[15:8]/TS0_DIN[7:0] and VP_CLKIN1 pins.
0	VPIF0	VPIF LSB Input Powerdown Control. This bit controls the VP_DIN[3:0]/TS0_DOUT[3:0], VP_DIN[7:4]/TS0_DOUT[7:4]/TS1_xx, and VP_CLKIN0 pins.

Copyright © 2007–2012, Texas Instruments Incorporated

4.3 Clock Considerations

Global device and local peripheral clocks are controlled by the PLL Controllers (PLLC1 and PLLC2) and the Power and Sleep Controller (PSC). In addition, the System Module Video Clock Control (VIDCLKCTL), TSIF Control (TSIFCTL), and Clock and Oscillator Control (CLKCTL) registers configure the clock sources to the VPIF, TSIF, CRGEN peripherals, and the Auxiliary Oscillator.

The selected Video, TSIF, and CRGEN module input clocks are disabled using the System Module Video Source Clock Disable (VSCLKDIS) register. **Note:** To ensure glitch-free operation, the clock should be disabled before changing the clock source frequency or muxing via the VIDCLKCTL and TSIFCTL.

4.3.1 Clock Configurations after Device Reset

After device reset, the user is responsible for programming the PLL Controllers (PLLC1 and PLLC2) and the Power and Sleep Controller (PSC) to bring the device up to the desired clock frequency and the desired peripheral clock state (clock gating *or* not).

For additional power savings, some of the DM6467 peripherals support clock gating within the peripheral boundary. For more details on clock gating and power saving features supported by a specific peripheral, see the peripheral-specific reference/user's guides [listed/linked in the *TMS320DM646x DMSoC Peripherals Overview* Reference Guide (literature number SPRUEQ0)].

4.3.1.1 Device Clock Frequency

The DM6467 defaults to PLL bypass mode. If the ROM bootloader is selected (BTMODE[3:0] ≠ 0100), the bootloader code programs PLLC1 and PLLC2.

Section 4.4.1, *Boot Modes* discusses the different boot modes in more detail.

The user ***must*** adhere to the various clock requirements when programming the PLLC1 and PLLC2:

- PLL multiplier and frequency ranges. For more details on PLL multiplier and frequency ranges, see Section 7.5.1, *PLL1 and PLL2*.

4.3.1.2 Module Clock State

The clock and reset state for each of the modules is controlled by the Power and Sleep Controller (PSC). Table 4-3 shows the default state of each module after a device-level global reset. The DM6467 device has four different module states—Enable, Disable, SyncReset, *or* SwRstDisable. For more information on the definitions of the module states, the PSC, and PSC programming, see Section 7.3.5, *Power and Sleep Controller (PSC)* and the *TMS320DM646x DMSoC ARM Subsystem* Reference Guide (literature number SPRUEP9).

Copyright © 2007–2012, Texas Instruments Incorporated

Table 4-3. DM6467 Default Module States

LPSC #	MODULE NAME	DEFAULT MODULE STATE [PSC Register MDSTATn.STATE]
0	ARM	Enable
1	DSP C64x+	If DSPBOOT = 0 then, Enable and Module Local Reset is asserted (MDSTATn.LRST = 0). If DSPBOOT = 1 then, Enable and Module Local Reset is deasserted (MDSTATn.LRST = 1).
2	HDVICP0	SwRstDisable
3	HDVICP1	SwRstDisable
4	EDMACC	SwRstDisable
5	EDMATC0	SwRstDisable
6	EDMATC1	SwRstDisable
7	EDMATC2	SwRstDisable
8	EDMATC3	SwRstDisable
9	USB2.0	SwRstDisable
10	ATA	SwRstDisable
11	VLYNQ	SwRstDisable
12	HPI	SwRstDisable
13	PCI	SwRstDisable
14	EMAC/MDIO	SwRstDisable
15	VDCE	SwRstDisable
16 – 17	Video Port(1)	SwRstDisable
18	TSIF0	SwRstDisable
19	TSIF1	SwRstDisable
20	DDR2 Memory Contoller	SwRstDisable
21	EMIFA	If BTMODE[3:0] ≠ 0100 and DSPBOOT = 0 then, SwRstDisable If BTMODE[3:0] = 0100 or DSPBOOT = 1 then, Enable
22	McASP0	SwRstDisable
23	McASP1	SwRstDisable
24	CRGEN0	SwRstDisable
25	CRGEN1	SwRstDisable
26	UART0	SwRstDisable
27	UART1	SwRstDisable
28	UART2	SwRstDisable
29	PWM0	SwRstDisable
30	PWM1	SwRstDisable
31	I2C	SwRstDisable
32	SPI	SwRstDisable
33	GPIO	SwRstDisable
34	TIMER0	SwRstDisable
35	TIMER1	SwRstDisable
36 – 44	Reserved	Reserved
45	ARM INTC	Enable

(1) The Video Port Module has a total of five clock inputs that can be controlled by the LPSC. One LPSC can support *only* a maximum of four clocks; therefore, two LPSCs are assigned to the Video Port. Both Video Port LPSCs should be controlled together and should be set to the same state.

Copyright © 2007–2012, Texas Instruments Incorporated

4.3.2 Clock Control

This section describes the following registers: the VPIF (Video)/TSIF clock control and clock disable registers and the Clock and Oscillator control register.

4.3.2.1 Video Clock Control Register

The Video Clock Control (VIDCLKCTL) register allows the user to select/control the clock muxing for the video channels' (i.e., channels 1, 2, and 3) output clock source.

31	16
RESERVED	
R-0000 0000 0000 0000	

15	14 12	11	10 8	7 5	4	3 0
RSV	VCH3CLK	RSV	VCH2CLK	RESERVED	VCH1CLK	RESERVED
R-0	R/W-111	R-0	R/W-110	R-000	R/W-1	R-0000

LEGEND: R/W = Read/Write; R = Read only; -*n* = value after reset

Figure 4-2. VIDCLKCTL Register [0x01C4 0038]

Table 4-4. VIDCLKCTL Register Bit Descriptions

BIT	NAME	DESCRIPTION
31:15	RESERVED	Reserved. Read returns "0".
14:12	VCH3CLK	Video Channel 3 Clock Source. This field selects the clock source for the Channel 3 output source clock. 000 = CRG0_VCXI (external pin) 001 = CRG1_VCXI (external pin) 010 = SYSCLK8 (PLLC1) 011 = AUXCLK (PLLC1) 100 = VP_CLKIN0 (external pin) 101 = STC_CLKIN (external pin) 110 = VP_CLKIN2 (external pin) 111 = VP_CLKIN3 (external pin)
11	RSV	Reserved. Read returns "0".
10:8	VCH2CLK	Video Channel 2 Clock Source. This field selects the clock source for the Channel 2 output source clock. 000 = CRG0_VCXI (external pin) 001 = CRG1_VCXI (external pin) 010 = SYSCLK8 (PLLC1) 011 = AUXCLK (PLLC1) 100 = VP_CLKIN0 (external pin) 101 = STC_CLKIN (external pin) 110 = VP_CLKIN2 (external pin) 111 = Reserved
7:5	RESERVED	Reserved. Read returns "0".
4	VCH1CLK	Video Channel 1 Clock Source. This bit selects the clock source for the Channel 1 input clock. 0 = VP_CLKIN0 (external pin) 1 = VP_CLKIN1 (external pin)
3:0	RESERVED	Reserved. Read returns "0".

Copyright © 2007–2012, Texas Instruments Incorporated

4.3.2.2 TSIF Control

The TSIF Control (TSIFCTL) registers allows the user to select/control the clock muxing for the counter and serial output of TSIF1 *and*the counter and parallel/serial output for TSIF0.

31	16
RESERVED	
R-0000 0000 0000 0000	

15	14 12	11 8	7	6 4	3	2 0
RSV	TSIF1_CNTCLK	TSSO_CLK	RSV	TSIF0_CNTCLK	RSV	TSPO_CLK
R-0	R/W-000	R/W-0000	R-0	R/W-000	R-0	R/W-000

LEGEND: R/W = Read/Write; R = Read only; -*n* = value after reset

Figure 4-3. TSIFCTL Register [0x01C4 0050]

Table 4-5. TSIFCTL Register Bit Descriptions

BIT	NAME	DESCRIPTION
31:15	RESERVED	Reserved. Read returns "0".
14:12	TSIF1_CNTCLK	TSIF1 Counter Clock Source. This field selects the clock source for the TSIF1 module's counter. 000 = CRG1_VCXI (external pin) 001 = STC_CLKIN (external pin) 010 = AUXCLK (PLLC1 output – 27 MHz) 011 = CRG0_VCXI (external pin) 100 = VP_CLKIN2 (external pin) 101 = VP_CLKIN3 (external pin) 110 = Reserved 111 = Reserved
11:8	TSSO_CLK	TSIF1 Serial Output Clock Source. This field selects the clock source for the TSIF1 output source clock. 0000 = CRG1_VCXI (external pin) 0001 = STC_CLKIN (external pin) 0010 = SYSCLK6 (PLLC1) 0011 = SYSCLKBP (PLLC1) 0100 = VP_CLKIN0 (external pin) 0101 = TS1_CLKIN (external pin) 0110 = VP_CLKIN2 (external pin) 0111 = Reserved 1000 = CRG0_VCXI 1001 = Reserved 1xx1 = Reserved
7	RSV	Reserved. Read returns "0".
6:4	TSIF0_CNTCLK	TSIF0 Counter Clock Source. This field selects the clock source for the TSIF0 module's counter. 000 = CRG0_VCXI (external pin) 001 = STC_CLKIN (external pin) 010 = AUXCLK (PLLC1 output – 27 MHz) 011 = CRG1_VCXI (external pin) 100 = VP_CLKIN0 (external pin) 101 = VP_CLKIN1 (external pin) 110 = Reserved 111 = Reserved
3	RSV	Reserved. Read returns "0".
2:0	TSPO_CLK	TSIF0 Parallel/Serial Output Clock Source. This field selects the clock source for the TSIF0 output source clock. 000 = CRG0_VCXI (external pin) 001 = STC_CLKIN (external pin) 010 = SYSCLK5 (PLLC1) 011 = SYSCLKBP (PLLC1) 100 = VP_CLKIN0 (external pin) 101 = VP_CLKIN1 (external pin) 110 = TS0_CLKIN (external pin) 111 = CRG1_VCXI (external pin)

Copyright © 2007–2012, Texas Instruments Incorporated

4.3.2.3 Video and TSIF Clock Disable

The Video Source Clock Disable (VSCLKDIS) register allows the user to disable the selected Video (VPIF), TSIF, and CRGEN module input clocks.

Note: To ensure glitch-free operation, the clock should be disabled before changing the clock source frequency or muxing via the VIDCLKCTL and TSIFCTL.

31	16
RESERVED	
R-0000 0000 0000 0000	

15	12	11	10	9	8	7	6	5	4	3	2	1	0
RESERVED		VID3	VID2	VID1	VID0	TSIFCNT1	TSIFCNT0	TSIFTX1	TSIFTX0	TSIFRX1	TSIFRX0	CRG1	CRG0
R-0000		R/W-1	R/W-1	R/W-1	R/W-1	R/W-1	R/W-1	R/W-1	R/W-1	R/W-1	R/W-1	R/W-1	R/W-1

LEGEND: R/W = Read/Write; R = Read only; -*n* = value after reset

Figure 4-4. VSCLKDIS Register [0x01C4 006C]

Table 4-6. VSCLKDIS Register Bit Descriptions

BIT	NAME	DESCRIPTION
31:12	RESERVED	Reserved. Read returns "0".
11	VID3	VPIF Channel 3 Clock Disable. 0 = Clock enabled. 1 = Clock disabled.
10	VID2	VPIF Channel 2 Clock Disable. 0 = Clock enabled. 1 = Clock disabled.
9	VID1	VPIF Channel 1 Clock Disable. 0 = Clock enabled. 1 = Clock disabled.
8	VID0	VPIF Channel 0 Clock Disable. 0 = Clock enabled. 1 = Clock disabled.
7	TSIFCNT1	TSIF1 Counter Clock Disable. 0 = Clock enabled. 1 = Clock disabled.
6	TSIFCNT0	TSIF0 Counter Clock Disable. 0 = Clock enabled. 1 = Clock disabled.
5	TSIFTX1	TSIF1 Transmit Clock Disable. 0 = Clock enabled. 1 = Clock disabled.
4	TSIFTX0	TSIF0 Transmit Clock Disable. 0 = Clock enabled. 1 = Clock disabled.
3	TSIFRX1	TSIF1 Receive Clock Disable. 0 = Clock enabled. 1 = Clock disabled.
2	TSIFRX0	TSIF0 Receive Clock Disable. 0 = Clock enabled. 1 = Clock disabled.
1	CRG1	CRGEN1 Clock Disable. 0 = Clock enabled. 1 = Clock disabled.
0	CRG0	CRGEN0 Clock Disable. 0 = Clock enabled. 1 = Clock disabled.

Copyright © 2007–2012, Texas Instruments Incorporated

4.3.3 Clock and Oscillator Control

The Clock and Oscillator Control (CLKCTL) register allows the user to disable the OSC pwrdwn and pwr disable

31	26	25	24	23	20	19	16
RESERVED		OSCPWRDN	OSCDIS	RESERVED		CLKOUT	
R-0000 00		R/W-0	R/W-1	R-0000		R/W-1000	

15	12	11	8	7	4	3	0
RESERVED		AUD_CLK1		RESERVED		AUD_CLK0	
R-0000		R/W-0000		R-0000		R/W-0000	

LEGEND: R/W = Read/Write; R = Read only; -*n* = value after reset

Figure 4-5. CLKCTL Register [0x01C4 005C]

Table 4-7. CLKCTL Register Bit Descriptions

BIT	NAME	DESCRIPTION
31:26	RESERVED	Reserved. Read returns "0".
25	OSCPWRDN	Auxiliary Oscillator Powerdown. This bit controls the internal bias resistor conection. 0 = Internal bias resistor connected (normal operation) 1 = Internal bias resistor disconnected (external bias resistor required or clock input used)
24	OSCDIS	Auxiliary Oscillator Disable. This bit disables the oscillator. 0 = Oscillator enabled (normal operation). 1 = Oscillator disabled (clock input used or no Auxiliary clock required).
23:20	RESERVED	Reserved. Read returns "0".
19:16	CLKOUT	CLKOUT0 Source. This field selects the clock source for the CLKOUT0 output. 0000 = Disabled 0001 = PLL1 AUXCLK 0010 = Reserved 0011 = SYSCLK3(1) 0100 = SYSCLK4 0101 = SYSCLK5 0110 = SYSCLK6 0111 = Reserved 1000 = SYSCLK8 1001 = SYSCLK9 1010 = AUX_MXI 1011 = Reserved 1100 = Reserved 1101 = Reserved 1110 = Reserved 1111 = Reserved
15:12	RESERVED	Reserved. Read returns "0".

(1) The maximum frequency allowed for the CLKOUT0 pin is 148.5 MHz. For the -729 MHz device, in PLL mode, do not configure the CLKOUT bits to SYSCLK3 (0011) because the CLKOUT0 source will exceed the maximum frequency limit allowed for CLKOUT0 pin. For more details on the CLKOUT0 timings, see Table 7-15, *Switching Characteristics Over Recommended Operating Conditions for CLKOUT0*.

Copyright © 2007–2012, Texas Instruments Incorporated

Table 4-7. CLKCTL Register Bit Descriptions (continued)

BIT	NAME	DESCRIPTION
11:8	AUD_CLK1	AUDIO_CLK1 Source. This field selects the clock source for the AUDIO_CLK1 output. 0000 = Disabled 0001 = PLL1 AUXCLK 0010 = CRG0_VCXI 0011 = CRG1_VCXI 0100 = VP_CLKIN0 0101 = VP_CLKIN1 0110 = VP_CLKIN2 0111 = VP_CLKIN3 1000 = AUX_MXI 1001 = STC_CLKIN 1010 = Reserved 1011 = Reserved 1100 = Reserved 1101 = Reserved 1110 = Reserved 1111 = Reserved
7:4	RESERVED	Reserved. Read returns "0".
3:0	AUD_CLK0	AUDIO_CLK0 Source. This field selects the clock source for the AUDIO_CLK0 output. 0000 = Disabled 0001 = PLL1 AUXCLK 0010 = CRG0_VCXI 0011 = CRG1_VCXI 0100 = VP_CLKIN0 0101 = VP_CLKIN1 0110 = VP_CLKIN2 0111 = VP_CLKIN3 1000 = AUX_MXI 1001 = STC_CLKIN 1010 = Reserved 1011 = Reserved 1100 = Reserved 1101 = Reserved 1110 = Reserved 1111 = Reserved

Copyright © 2007–2012, Texas Instruments Incorporated

4.4 Boot Sequence

The boot sequence is a process by which the device's memory is loaded with program and data sections, and by which some of the device's internal registers are programmed with predetermined values. The boot sequence is started automatically after each device-level global reset. For more details on device-level global resets, see Section 7.7, *Reset*.

There are several methods by which the memory and register initialization can take place. Each of these methods is referred to as a boot mode. The boot mode to be used is selected at reset. For more information on the bootmode selections, see Section 4.4.1, *Boot Modes*.

The device is booted through multiple means—primary bootloaders within internal ROM or EMIFA, and secondary user bootloaders from peripherals or external memories. Boot modes, pin configurations, and register configurations required for booting the device, are described in the following subsections.

4.4.1 Boot Modes

The DM6467 boot modes are determined by these device boot and configuration pins. For information on how these pins are sampled at device reset, see Section 7.7.1.2, *Latching Boot and Configuration Pins*.

- BTMODE[3:0]
- PCIEN
- CS2BW
- DSPBOOT
- VP_DOUT7/VADJEN

The TMS320DM646x DMSoC ARM can boot either from asynchronous EMIF/NOR Flash or from ARM ROM, as determined by the device boot and configuration pins at reset (BTMODE[3:0] and PCIEN). The PCIEN pin configuration is used to select the default configuration of the EMIFA/PCI/HPI pins at reset. This allows the DM646x DMSoC to be PCI-compliant at reset. When PCIEN = 1, the PCI module controls the multiplexed pins with the appropriate pullup/pulldown configuration. For all other bootmodes (non-PCI bootmodes), the PCIEN ***must*** be cleared to "0".

For a more detailed description of the ROM boot modes supported by the DM646x DMSoC, see Using the *TMS320DM646x Bootloader* Application Report (literature number SPRAAS0).

4.4.2 Boot Mode Registers

The DSPBOOTADDR, BOOTCMPLT, BOOTCMD, and BOOTCFG registers are used to control boot and device configurations.

4.4.2.1 DSPBOOTADDR Register

The DSPBOOTADDR register contains the upper 22 bits of the DSP reset vector.

31	10	9	0
BOOTADDR[21:0]		RESERVED	
R/W-0100 0010 0010 0000 0000 00		R-00 0000 0000	

LEGEND: R/W = Read/Write; R = Read only; -*n* = value after reset

Figure 4-6. DSPBOOTADDR Register

Table 4-8. DSPBOOTADDR Register Bit Descriptions

BIT	NAME	DESCRIPTION
31:10	BOOTADDR[21:0]	Upper 22 bits of the C64x+ DSP boot address.
9:0	RESERVED	Reserved

Copyright © 2007–2012, Texas Instruments Incorporated

4.4.2.2 BOOTSTAT Register

The Boot Status (BOOTSTAT) register indicates the status of the device boot process (e.g., boot error, boot complete, or watchdog timer reset).

31	30	20	19	16
WDRST	RESERVED		BOOTERR	
R/W-0	R-000 0000 0000		R-0000	

15	1	0
RESERVED		BC
R-0000 0000 0000 000		R/W-0

LEGEND: R/W = Read/Write; R = Read only; -*n* = value after reset

Figure 4-7. BOOTSTAT Register

Table 4-9. BOOTSTAT Register Bit Descriptions

BIT	NAME	DESCRIPTION
31	WDRST	Watchdog Timer Reset. 0 = Device reset was not a result of a watchdog timer timeout. 1 = Device reset was a result of a watchdog timer timeout. This is a "sticky" bit that can be used to debug WD timeout conditions. The bit is set when a WD timeout occurs (TOUT2). This bit is reset (to "0") by a $\overline{\text{POR}}$ reset only; otherwise it retains its value. It is ***not*** cleared by a Warm Reset or Soft Reset. The bit may be cleared by writing a "1".
30:20	RESERVED	Reserved. Read returns "0".
19:16	BOOTERR	Boot Error. 0000 = No boot error [**default**]. Others = Bootloader detected boot error. The exact meaning of the various error codes will be determined by the bootloader software.
15:1	RESERVED	Reserved. Read returns "0".
0	BC	Boot Complete. 0 = Host has ***not*** completed the boot sequence [**default**]. 1 = Host has completed the boot sequence. This bit may be optionally set by a host boot device (such as PCI or HPI) to indicate that it has finished loading code. The ARM926 can poll this bit to determine whether to continue the boot process.

Copyright © 2007–2012, Texas Instruments Incorporated

4.4.2.3 BOOTCFG Register

The Boot Configuration (BOOTCFG) register is a *read-only* register that indicates the value of the device bootmode and configuration pins latched at the end of reset. During a hard reset ($\overline{\text{POR}}$ or $\overline{\text{RESET}}$ pin active [low]), the values of the CFG pins (i.e., BTMODE[3:0], $\overline{\text{CS2BW}}$, $\overline{\text{PCIEN}}$, DSPBOOT) are propagated through the BOOTCFG register to the Boot Controller. When $\overline{\text{RESET}}$ or $\overline{\text{POR}}$ is de-asserted, the value of the pins is latched. The BOOTCFG value *does not* change as a result of a soft reset, instead the value latched at the end of the previous global reset is retained.

31																18	17	16
RESERVED																	DSP_BT	PCIEN
R-0000 0000 0000 00																	R-L	R-L

15			13	12	11			9	8	7				4	3			0
RESERVED				VADJEN	RESERVED				CS2_BW	RESERVED					BOOTMODE			
R-000				R-L	R-000				R-L	R-0000					R-LLLL			

LEGEND: R = Read only; L = Latched pin value; -*n* = value after reset

Figure 4-8. BOOTCFG Register

Copyright © 2007–2012, Texas Instruments Incorporated

Table 4-10. BOOTCFG Register Bit Descriptions

BIT	NAME	DESCRIPTION
31:18	RESERVED	Reserved. Read returns "0".
17	DSP_BT	DSP Boot. Latched from DSPBOOT input at the rising edge of RESET or POR. 0 = ARM boots C64x+. 1 = C64x+ self-boots. This bit will cause the DSP to be released from reset automatically. The C64x+ will boot from EMIFA (default DSPBOOTADDR address 0x4220 0000). If BOOTMODE = 0010 or 0011, or PCIEN = 1, then the C64x+ self-boot will fail since EMIFA will be disabled.
16	PCIEN	PCI Enable. Latched from PCIEN input at the rising edge of RESET or POR. 0 = PCI disabled. 1 = PCI enabled. PCIEN = 1 disables the internal pullup and pulldown resistors on the PCI pins and configures the pin muxing for PCI.
15:13	RESERVED	Reserved. Read returns "0".
12	VADJEN	Votlage Adjust Enable (SmartReflex). Latched from VADJEN input at the rising edge of RESET or POR. This pin determines whether GP[6]/CVDDADJ0 and GP[7]/CVDDADJ1 function as GPIO pins or as SmartReflex control output pins. 0 = SmartReflex outputs disabled. GP[6]/CVDDADJ0 and GP[7]/CVDDADJ1 pins function as GPIO. 1 = SmartReflex outputs enabled. GP[6]/CVDDADJ0 and GP[7]/CVDDADJ1 pins function as SmartReflex control outputs.
11:9	RESERVED	Reserved. Read returns "0".
8	CS2_BW	EMIFA EM_CS2 Default Bus Width. Latched from CS2BW input at the rising edge of RESET or POR. 0 = Default to 8-bit operation. 1 = Default to 16-bit operation. This bit determines the default bus width of the EMIFA EM_CS2 memory space. This ensures that boot from EMIFA (ARM or DSP) will correctly read the attached memory.
7:4	RESERVED	Reserved. Read returns "0".
3:0	BOOTMODE	Boot Mode Configuration Bits. Bit values latched from BTMODE[3:0] at the rising edge of RESET or POR. 0000 = Emulation boot. 0001 = Reserved. 0010 = HPI-16 (if PCIEN = 0). PCI without autoinitialization (if PCIEN = 1). 0011 = HPI-32 (if PCIEN = 0). PCI with autoinitialization (if PCIEN = 1). 0100 = EMIFA direct boot (ROM/NOR) (if PCIEN = 0; error if PCIEN = 1 defaults to UART0). 0101 = Reserved. 0110 = I2C boot. 0111 = NAND Flash boot (if PCIEN = 0; error if PCIEN = 1 defaults to UART0). 1000 = UART0 boot. 1001 = Reserved. 1010 = Reserved. 1011 = Reserved. 1100 = Reserved. 1101 = Reserved. 1110 = SPI boot. 1111 = Reserved.

Copyright © 2007–2012, Texas Instruments Incorporated

4.4.2.4 ARMBOOT Register

The ARM Boot Configuration (ARMBOOT) register is used to control the ARM926 boot. The ARMBOOT value *does not* change as a result of a soft reset, instead the last value written is retained.

When ROM boot is selected (BTMODE[3:0] ≠ 0100), a jump to the internal TCM ROM (0x0000 8000) is forced into the first fetched instruction word. The embedded ROM boot loader (RBL) code can then perform certain configuration steps, read the BOOTCFG register to determine the desired boot method, and branch to an appropriate secondary loader utility.

If EMIFA boot is selected (BTMODE[3:0] = 0100), a jump to the highest branch address (0x0200 0000) is forced into the first fetched instruction word. This must be modified to address 0x4200 0000 in order to map to the EMIFA. The ARM will then continue executing from external memory using the default EMIFA timings until modified by software. **Note:** that either NOR Flash or ROM ***must*** be connected to the first EMIFA chip select space (EM_CS2). The EMIFA ***does not*** support direct execution from NAND Flash.

31	5	4	3	1	0
RESERVED		ADDRMOD	RESERVED		TRAMBOOT
R-0000 0000 0000 0000 0000 0000 000		R/W-C	R-000		R/W-0

LEGEND: R/W = Read/Write; R = Read only; C = Clear; -*n* = value after reset

Figure 4-9. ARMBOOT Register

Table 4-11. ARMBOOT Register Bit Descriptions

BIT	NAME	DESCRIPTION
31:5	RESERVED	Reserved. Read returns "0".
4	ADDRMOD	IAHB Address Modification. 0 = No address modification. 1 = Address bit 30 is tied high to modify IAHB fetch address to point to EMIFA. The default value for this bit is determined by the BOOTMODE configuration bits (BTMODE[3:0]). If BTMODE[3:0] = 0100 [EMIFA direct boot (ROM/NOR)] , then ADDRMOD defaults to "1" so that instruction fetches from the ARM will point to EMIFA $\overline{CS2}$ memory space. For all other BTMODE[3:0] values, ADDRMOD defaults to "0" because ARM will boot from its TCM (ROM or RAM). The ADDRMOD value is ignored when TRAMBOOT is set (1) [address modification is disabled]. After branching into the EMIFA $\overline{CS2}$ space, software should clear this bit as part of the reset routine so that subsequent IAHB access addresses are not modified.
3:1	RESERVED	Reserved. Read returns "0".
0	TRAMBOOT	ARM TCM RAM Boot. 0 = Use BTMODE[3:0] selected boot mode 1 = Boot from ITCM RAM This is a "sticky" bit that can be used to force the ARM926 to boot from ITCM RAM. On $\overline{POR}$ reset, this bit will be initialized to "0" because TCM RAM is not initialized; otherwise, the bit retains the value. After initializing ITCM RAM, software can set this bit so that subsequent Warm Reset ($\overline{RESET}$) or Soft Reset will boot from the ITCM.

4.4.2.5 ARMWAIT Register

The ARM Wait State Control (ARMWAIT) register is used to control ARM926 accesses to its TCM RAM. At normal ARM operating frequency, a wait state ***must*** be inserted when accessing TCM RAM. When the device is operated at low speeds, performance may be increased by removing the wait state. **Note:** TCM ROM *will always* operate with a wait state enabled.

31	1	0
RESERVED		RAMWAIT
R-0000 0000 0000 0000 0000 0000 0000 000		R/W-1

LEGEND: R/W = Read/Write; R = Read only; -*n* = value after reset

Figure 4-10. ARMWAIT Register

Copyright © 2007–2012, Texas Instruments Incorporated

Table 4-12. ARMWAIT Register Bit Descriptions

BIT	NAME	DESCRIPTION
31:1	RESERVED	Reserved. Read returns "0".
0	RAMWAIT	ARM TCM RAM Wait State Configuration. 0 = TCM RAM wait state disabled. 1 = TCM RAM wait state enabled.

Copyright © 2007–2012, Texas Instruments Incorporated

4.5 Configurations At Reset

Some device configurations are determined at reset. The following subsections give more details.

4.5.1 Device and Peripheral Configurations at Device Reset

Table 3-5, BOOT Terminal Functions lists the device boot and configuration pins that are latched at device reset for configuring basic device settings for proper device operation. Table 4-13, summarizes the device boot and configuration pins, and the device functions that they affect.

Table 4-13. Default Functions Affected by Device Boot and Configuration Pins

DEVICE BOOT AND CONFIGURATION PINS	BOOT SELECTED	PIN MUX CONTROL	GLOBAL SETTING	PERIPHERAL SETTING
BOOTMODE[3:0]	Boot Mode	**PINMUX0/PINMUX1 Registers**: Based on BOOTMODE[3:0], the bootloader code programs PINMUX0 and PINMUX1 registers to select the appropriate pin functions required for boot.	**I/O Pin Power**: Based on BOOTMODE[3:0], the bootloader code programs VDD3P3V_PWDN register to power up the I/O pins required for boot.	**PSC/Peripherals**: Based on BOOTMODE[3:0], the bootloader code programs the PSC to put boot-related peripheral(s) in the Enable State, and programs the peripheral(s) for boot operation.
CS2BW	EMIFA Direct Boot Mode	PINMUX0.HPIEN = 0 PINMUX0.PCIEN = 0 PINMUIX0.ATAEN = 0	–	The default width of the first EMIFA chip select space (CS2) is determined by the CS2BW value. If CS2BW = 0, the space defaults to 8-bits wide. If CS2BW = 1, it defaults to 16-bits wide. This allows the ARM to make full use of the width of the attached memory device when booting from EMIFA.
PCIEN (1)	**Host Boot**: PCIEN selects the type of Host Boot (HPI Boot *or* PCI Boot)	**PINMUX0.PCIEN**: sets this field to control the PCI pin muxing in . (1) (2)	–	**PSC/Peripheral** *(Applicable to Host Boot only)*: Based on the Host Boot type (PCI *or* HPI), the bootloader code programs the PSC to put the corresponding peripheral in the Enable State, and programs the peripheral for boot operation.

(1) Software can modify all PINMUX0 and PINMUX1 bit fields from their defaults.
(2) In addition to pin mux control, PCIEN also affects the internal pullup/down resistors of the PCI capable pins. When PCIEN = 0, internal pullup/down resistors on the PCI capable pins are enabled. When PCIEN = 1, internal pullup/down resistors on the PCI capable pins are disabled to be compliant to the *PCI Local Bus Specification Revision 2.3*.

Copyright © 2007–2012, Texas Instruments Incorporated

Table 4-13. Default Functions Affected by Device Boot and Configuration Pins (continued)

DEVICE BOOT AND CONFIGURATION PINS	BOOT SELECTED	PIN MUX CONTROL	GLOBAL SETTING	PERIPHERAL SETTING
DSPBOOT	Bit = 0, DSP is booted by the ARM Bit =1, DSP boots self from EMIFA	–	–	**Note:** that either NOR Flash or ROM must be connected to the first EMIFA chip select space (CS2). The EMIFA does not support direct execution from NAND Flash. Code within the EMIFA memory should execute a branch to the actual EMIFA address and then disable the Instruction Address Modification logic (by clearing the ADDRMOD bit in the ARMBOOT register of the System Module).
VADJEN	–	At reset, the input state is sampled to determine whether the SmartReflex Control Outputs are enbabled or disabled. 0 = SmartReflex outputs disabled. GP[6]/CVDDADJ0 and GP[7]/CVDDADJ1 pins function as GPIO. 1 = SmartReflex outputs enabled. GP[6]/CVDDADJ0 and GP[7]/CVDDADJ1 pins function as SmartReflex control outputs.	–	–
CVDDADJ0 CVDDADJ1	–	Once the SmartReflex Control Outputs are enabled (VADJEN = 1 at reset), these pins control the adjustable core power supply to output the CV_{DD} voltage for the device: 00 = 1.2 V (-594V, -594AV devcies *only*) 11 = 1.05 V (-594V, -594AV devcies *only*) All other settings RESERVED.		–

For proper device operation, external pullup/pulldown resistors may be required on these device boot and configuration pins. For discussion situations where external pullup/pulldown resistors are required, see Section 4.8.1, *Pullup/Pulldown Resistors*.

Note: All DM6467 device configuration inputs (BOOTMODE[3:0], CS2BW, PCIEN, and DSPBOOT) are multiplexed with other functional pins. These pins function as device boot and configuration pins only during device reset. The user must take care of any potential data contention in the system. To help avoid system data contention, the DM6467 puts these configuration pins into a high-impedance state (Hi-Z) when device reset (RESET or POR) is asserted, and continues to hold them in a high-impedance state until the internal global reset is removed; at which point, the default peripheral (VPIF) will now control these pins.

Copyright © 2007–2012, Texas Instruments Incorporated

All of the device boot and configuration pin settings are captured in the corresponding bit fields in the BOOTCFG register (see Section 4.4.2.3).

The following subsections provide more details on the device configurations determined at device reset: CS2BW, PCIEN, and DSPBOOT.

4.5.2 EMIFA CS2 Bus Width (CS2BW)

The default width of the first EMIFA chip select space (CS2) is determined by the CS2BW value. If CS2BW = 0, the space defaults to 8-bits wide. If CS2BW = 1, it defaults to 16-bits wide. This allows the ARM to make full use of the width of the attached memory device when booting from EMIFA.

Note: CS2BW ***only*** selects the default bus width. The EMIFA bus width may be changed at any time via software by accessing the appropriate EMIFA control register.

The default width affects ***only*** the first chip select space (CS2). All other chip select spaces default to 8-bits wide and ***must*** be modified using the appropriate EMIFA control register if 16-bit operation is desired.

4.5.3 PCI Enable (PCIEN)

The PCIEN configuration pin determines if the PCI peripheral is used on this device. If PCIEN = 1 indicating the PCI is used, then the PCI multiplexed pins default to PCI functions, and the pins' corresponding internal pullup/pulldown resistors are disabled. If PCIEN = 0 indicating the PCI is not used, then the PCI muxed pins default to non-PCI functions (e.g., EMIFA or HPI pin functions), and the pins' corresponding internal pullup/pulldown resistors are enabled.

The PCIEN setting is captured and stored in the BOOTCFG.PCIEN bit field, and also in the PINMUX0.PCIEN bit field.

4.5.4 DSPBOOT

The DSPBOOT input determines DSP operation at reset. For most applications, the ARM is the master device and controls the reset and boot of the DSP. Under this scenario (DSPBOOT = 0), the DSP will remain disabled (held in reset) after reset. The ARM is responsible for releasing DSP from reset. Before releasing DSP from reset, the ARM must transfer a valid DSP boot image to program memory accessible by the DSP (DSP memory, EMIFA or DDR2), and configure the DSP boot address in DSPBOOTADDR register (in SYSTEM module) from which the DSP will begin execution.

When DSPBOOT = 1, the DSP will boot itself. Under this scenario, DSP will be released from reset without ARM intervention. The DSP boot address is set to an EMIFA address 0x4220 0000h. DSP will begin execution with instruction (L1P) cache enabled.

Note: The DSPBOOT operation is overridden when ARM HPI or PCI boot is selected (BTMODE[3:0] = 001x). This is because ARM HPI/PCI boot selection will force the HPIEN or PCIEN bit in PINMUX0 to '1'. This enables UHPI/PCI functions on the EMIFA control and data pins and prevents the DSP from using EMIFA. DSPBOOT is treated as "0" internally when BTMODE[3:0] = 001x, regardless of the value at the configuration pin (The actual pin value should still be latched in the BOOTCFG register of the System Module).

Copyright © 2007–2012, Texas Instruments Incorporated

4.6 Configurations After Reset

The following sections provide details on configuring the device after reset.

Multiplexed pin are configured both at and after reset. Section 4.5.1, *Device and Peripheral Configurations at Device Reset*, discusses multiplexed pin control at reset. For more details on multiplexed pins control after reset, see Section 4.7, *Multiplexed Pin Configurations*.

4.6.1 Switch Central Resource (SCR) Bus Priorities

Prioritization within the Switched Central Resource (SCR) is programmable for each master. The register bit fields and default priority levels for DM6467 bus masters are shown in Table 4-14, *DM6467 Default Bus Master Priorities*. The priority levels should be tuned to obtain the best system performance for a particular application. Lower values indicate higher priority. For most masters, their priority values are programmed at the system level by configuring the MSTPRI0, MSTPRI1, and MSTPRI2 registers. Details on the MSTPRI0/1/2 registers are shown in Figure 4-11, Figure 4-12, and Figure 4-13.

Table 4-14. DM6467 Default Bus Master Priorities

Priority Bit Field	Bus Master	Default Priority Level
VP0P	VPIF Capture	1 (MSTPRI2 Register)
VP1P	VPIF Display	1 (MSTPRI2 Register)
TSIF0P	TSIF0	1 (MSTPRI2 Register)
TSIF1P	TSIF1	1 (MSTPRI2 Register)
EDMATC0P	EDMATC0	2 (MSTPRI2 Register)
EDMATC1P	EDMATC1	2 (MSTPRI2 Register)
EDMATC2P	EDMATC2	2 (MSTPRI2 Register)
EDMATC3P	EDMATC3	2 (MSTPRI2 Register)
HDVICP0P	HDVICP0 (CFG)(1)	3 (MSTPRI0 Register)
HDVICP1P	HDVICP1 (CFG)(1)	3 (MSTPRI0 Register)
ARMINSTP	ARM926 (INST)	4 (MSTPRI0 Register)
ARMDATAP	ARM926 (DATA)	4 (MSTPRI0 Register)
DSPDMAP	C64x+ DSP (DMA)	4 (MSTPRI0 Register)
DSPCFGP	C64x+ DSP (CFG)(1)	4 (MSTPRI0 Register)
VDCEP	VDCE	4 (MSTPRI1 Register)
EMACP	EMAC	5 (MSTPRI1 Register)
USBP	USB2.0	5 (MSTPRI1 Register)
ATAP	ATA	5 (MSTPRI1 Register)
VLYNQP	VLYNQ	5 (MSTPRI1 Register)
PCIP	PCI	6 (MSTPRI1 Register)
HPIP	HPI	6 (MSTPRI1 Register)

(1) The C64x+ DSP (CFG), HDVICP0 (CFG), and HDVICP1 (CFG) priority values are not actually used by the DMSoC infrastructure – which gives equal weight round-robin priority to accesses from these three masters. Therefore, the priority settings for these three masters in the MSTPRI0 register have no effect.

Copyright © 2007–2012, Texas Instruments Incorporated

31	23	22	20	19	18	16
RESERVED		HDVICP1P(1)		RSV	HDVICP0P(1)	
R-0000 0000 0		R/W-011		R-0	R/W-011	

15	14	12	11	8	7	6	4	3	2	0
RSV	DSPDMAP		RSV	DSPCFGP(1)	RSV	ARMDATAP		RSV	ARMINSTP	
R-0	R/W-100		R-0	R/W-100	R-0	R/W-100		R-0	R/W-100	

LEGEND: R/W = Read/Write; R = Read only; -*n* = value after reset

Figure 4-11. MSTPRI0 Register [0x01C4 003C]

(1) The DSPCFGP, HDVICP0P, and HDVICP1P priority values are not actually used by the infrastructure, which gives equal weight round-robin priority to accesses from this master; therefore, the settings have no effect.

Table 4-15. MSTPRI0 Register Bit Descriptions

BIT	NAME	DESCRIPTION
31:23	RESERVED	Reserved. Read returns "0".
22:20	HDVICP1P(1)	HDVICP1 master port priority in System Infrastructure. Read returns "011". Writes have no effect.
19	RSV	Reserved. Read returns "0".
18:16	HDVICP0P(1)	HDVICP0 master port priority in System Infrastructure. Read returns "011". Writes have no effect.
15	RSV	Reserved. Read returns "0".
14:12	DSPDMAP	DSPDMA master port priority in System Infrastructure. 000 = Priority 0 (**Highest**) 100 = Priority 4 [**Default**] 001 = Priority 1 101 = Priority 5 010 = Priority 2 110 = Priority 6 011 = Priority 3 111 = Priority 7 (**Lowest**)
11	RSV	Reserved. Read returns "0".
10:8	DSPCFGP(1)	DSPCFG master port priority in System Infrastructure. Read returns "100". Writes have no effect.
7	RSV	Reserved. Read returns "0".
6:4	ARMDATAP	ARM DATA master port priority in System Infrastructure. 000 = Priority 0 (**Highest**) 100 = Priority 4 [**Default**] 001 = Priority 1 101 = Priority 5 010 = Priority 2 110 = Priority 6 011 = Priority 3 111 = Priority 7 (**Lowest**)
3	RSV	Reserved. Read returns "0".
2:0	ARMINSTP	ARM INST master port priority in System Infrastructure. 000 = Priority 0 (**Highest**) 100 = Priority 4 [**Default**] 001 = Priority 1 101 = Priority 5 010 = Priority 2 110 = Priority 6 011 = Priority 3 111 = Priority 7 (**Lowest**)

(1) The priorities for these masters are fixed at their default values. Writing alternate values to these fields has no effect..

Copyright © 2007–2012, Texas Instruments Incorporated

31	30 28	27	26 24	23	22 20	19	18 16
RSV	VDCEP	RSV	PCIP	RSV	HPIP	RSV	VLYNQP
R-0	R/W-100	R-0	R/W-110	R-0	R/W-110	R-0	R/W-101

15	14 12	11	10 8	7 3	2 0
RSV	ATAP	RSV	USBP	RESERVED	EMACP
R-0	R/W-101	R-0	R/W-101	R-0000 0	R/W-101

LEGEND: R/W = Read/Write; R = Read only; -*n* = value after reset

Figure 4-12. MSTPRI1 Register [0x01C4 0040]

Table 4-16. MSTPRI1 Register Bit Descriptions

BIT	NAME	DESCRIPTION
31	RSV	Reserved. Read returns "0".
30:28	VDCEP	VDCE master port priority in System Infrastructure. 000 = Priority 0 (**Highest**) 001 = Priority 1 010 = Priority 2 011 = Priority 3 100 = Priority 4 [**Default**] 101 = Priority 5 110 = Priority 6 111 = Priority 7 (**Lowest**)
27	RSV	Reserved. Read returns "0".
26:24	PCIP	PCI master port priority in System Infrastructure. 000 = Priority 0 (**Highest**) 001 = Priority 1 010 = Priority 2 011 = Priority 3 100 = Priority 4 101 = Priority 5 110 = Priority 6 [**Default**] 111 = Priority 7 (**Lowest**)
23	RSV	Reserved. Read returns "0".
22:20	HPIP	HPI master port priority in System Infrastructure. Same priority 0–7 selection as above. "110" = Priority 6 [**default**].
19	RSV	Reserved. Read returns "0".
18:16	VLYNQP	VLYNQ master port priority in System Infrastructure. Same priority 0–7 selection as above. "110" = Priority 6 [**default**].
15	RSV	Reserved. Read returns "0".
14:12	ATAP	ATA master port priority in System Infrastructure. Same priority 0–7 selection as above. "101" = Priority 5 [**default**].
11	RSV	Reserved. Read returns "0".
10:8	USBP	USB master port priority in System Infrastructure. Same priority 0–7 selection as above. "101" = Priority 5 [**default**].
7:3	RESERVED	Reserved. Read returns "0".
2:0	EMACP	EMAC master port priority in System Infrastructure. Same priority 0–7 selection as above. "101" = Priority 5 [**default**].

Copyright © 2007–2012, Texas Instruments Incorporated

31	30 28	27	26 24	23	22 20	19	18 16
RSV	TSIF1P	RSV	TSIF0P	RSV	VP1P	RSV	VP0P
R-0	R/W-001	R-0	R/W-001	R-0	R/W-001	R-0	R/W-001

15	14 12	11	10 8	7	6 4	3	2 0
RSV	EDMATC3P	RSV	EDMATC2P	RSV	EDMATC1P	RSV	EDMATC0P
R-0	R/W-010	R-0	R/W-010	R-0	R/W-010	R-0	R/W-010

LEGEND: R/W = Read/Write; R = Read only; -*n* = value after reset

Figure 4-13. MSTPRI2 Register

Table 4-17. MSTPRI2 Register Bit Descriptions

BIT	NAME	DESCRIPTION
31	RSV	Reserved. Read returns "0".
30:28	TSIF1P	TSIF1 master port priority in System Infrastructure. 000 = Priority 0 (**Highest**) 100 = Priority 4 001 = Priority 1 [**Default**] 101 = Priority 5 010 = Priority 2 110 = Priority 6 011 = Priority 3 111 = Priority 7 (**Lowest**)
27	RSV	Reserved. Read returns "0".
26:24	TSIF0P	TSIF0 master port priority in System Infrastructure. 000 = Priority 0 (**Highest**) 100 = Priority 4 001 = Priority 1 [**Default**] 101 = Priority 5 010 = Priority 2 110 = Priority 6 011 = Priority 3 111 = Priority 7 (**Lowest**)
23	RSV	Reserved. Read returns "0".
22:20	VP1P	VPIF display master port priority in System Infrastructure. Same priority 0–7 selection as above. "001" = Priority 1 [**default**].
19	RSV	Reserved. Read returns "0".
18:16	VP0P	VPIF capture master port priority in System Infrastructure. Same priority 0–7 selection as above. "001" = Priority 1 [**default**].
15	RSV	Reserved. Read returns "0".
14:12	EDMATC3P	EDMATC3 master port priority in System Infrastructure. Same priority 0–7 selection as above. "010" = Priority 2 [**default**].
11	RSV	Reserved. Read returns "0".
10:8	EDMATC2P	EDMATC2 master port priority in System Infrastructure. Same priority 0–7 selection as above. "010" = Priority 2 [**default**].
7	RSV	Reserved. Read returns "0".
6:4	EDMATC1P	EDMATC1 master port priority in System Infrastructure. Same priority 0–7 selection as above. "010" = Priority 2 [**default**].
3	RSV	Reserved. Read returns "0".
2:0	EDMATC0P	EDMATC0 master port priority in System Infrastructure. Same priority 0–7 selection as above. "010" = Priority 2 [**default**].

4.6.2 Peripheral Selection After Device Reset

After device reset, most peripheral configurations are done within the peripheral's registers. This section discusses some additional peripheral controls in the System Module. For information on multiplexed pin controls that determine what peripheral pins are brought out to the pins, see Section 4.7, *Multiplexed Pin Configurations*.

Copyright © 2007–2012, Texas Instruments Incorporated

4.6.2.1 HPICTL Register

The HPI control register (HPICTL) [0x01C4 0030] controls write access to HPI control and address registers and determines the host time-out value. HPICTL is not reset by a soft reset so that the HPI width will remain correctly configured. Figure 4-14 and Table 4-18 describe in detail the HPICTL register.

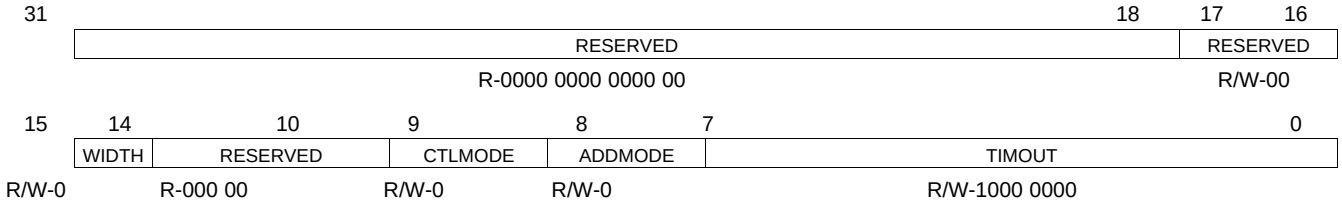

LEGEND: R/W = Read/Write; R = Read only; -*n* = value after reset

Figure 4-14. HPICTL Register [0x01C4 0030]

Table 4-18. HPICTL Register Bit Descriptions

BIT	NAME	DESCRIPTION
31:18	RESERVED	Reserved. Read-only, writes have no effect.
17:16	RESERVED	Reserved. For proper device operation, the user should *only* write "0" to these bits (default).
15	WIDTH	HPI Data Width. 0 = Half-width (16-bit) data bus 1 = Full-width (32-bit) data bus This bit value must be determined before releasing the UHPI from reset to ensure correct UHPI operation.
14:10	RESERVED	Reserved. Read-only, writes have no effect.
9	CTLMODE	HPIC Register Write Access. 0 = Host 1 = DMSoC (if ADDMODE = 1)
8	ADDMODE	HPIA Register Write Access. 0 = Host 1 = DMSoC
7:0	TIMOUT	Host Burst Write Timeout Value. When the HPI time-out counter reaches the value programmed here, the HPI write FIFO content is flushed. For more details on the time-out counter and its use in write bursting, see the *TMS320DM646x DMSoC Host Port Interface (HPI)* User's Guide (literature number SPRUES1).

4.6.2.2 USBCTL Register

The USB interface control register (USBCTL) [0x01C4 0034] is described in Figure 4-15 and Table 4-19.

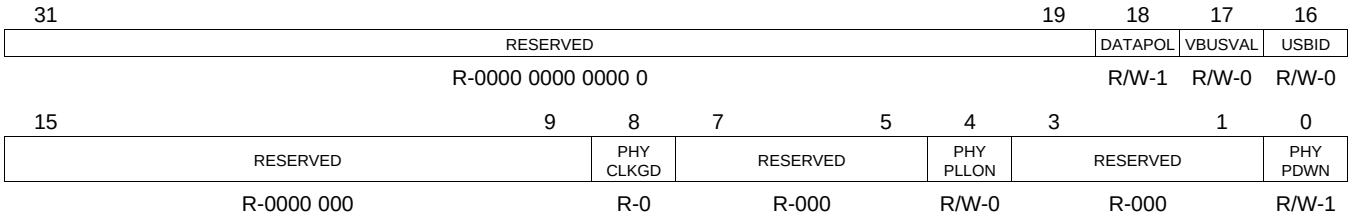

LEGEND: R/W = Read/Write; R = Read only; -*n* = value after reset

Figure 4-15. USBCTL Register [0x01C4 0034]

Table 4-19. USBCTL Register Bit Descriptions

BIT	NAME	DESCRIPTION
31:19	RESERVED	Reserved. Read returns "0".
18	DATAPOL	USB Data Polarity. 0 = Inverted data. 1 = Normal data polarity [default].
17	VBUSVAL	VBUS Sense Control. 0 = Disabled [default]. 1 = Session starts.
16	USBID	USB Mode. 0 = Host [default]. 1 = Peripheral.
15:9	RESERVED	Reserved. Read returns "0".
8	PHYCLKGD	USB PHY Power and Clock Good. 0 = PHY power is not ramped or PLL is not locked [default]. 1 = PHY power is good and PLL is locked.
7:5	RESERVED	Reserved. Read returns "0".
4	PHYPLLON	USB PHY PLL Suspend Override. 0 = Normal PLL operation [default]. 1 = Override PLL suspend state.
3:1	RESERVED	Reserved. Read returns "0".
0	PHYPDWN	USB PHY Power-Down Control. 0 = PHY powered on. 1 = PHY power off [default].

Copyright © 2007–2012, Texas Instruments Incorporated

4.6.2.3 PWMCTL (Trigger Source) Control Register

The PWM control register (PWMCTL) [0x01C4 0054] chip-level connections of both PWM0 and PWM1. Figure 4-16 and Table 4-20 describe in detail the PWMCTL register.

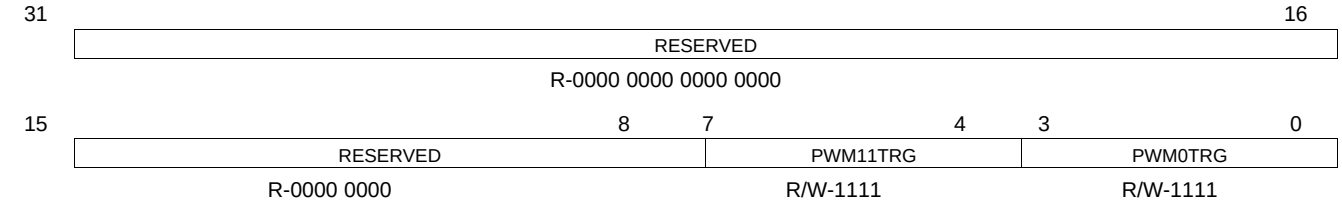

LEGEND: R/W = Read/Write; R = Read only; -*n* = value after reset

Figure 4-16. PWMCTL Register [0x01C4 0054]

Table 4-20. PWMCTL Register Bit Descriptions

BIT	NAME	DESCRIPTION
31:8	RESERVED	Reserved. Read-only, writes have no effect.
7:4	PWM1TRG	PWM1 Trigger Source 0000 = GP[0] 1000 = VPIF Vertical Interrupt 0 0001 = GP[1] 1001 = VPIF Vertical Interrupt 1 0010 = GP[2] 1010 = VPIF Vertical Interrupt 2 0011 = GP[3] 1011 = VPIF Vertical Interrupt 3 0100 = GP[4] 1100 = Reserved 0101 = GP[5] 1101 = Reserved 0110 = GP[6] 1110 = Reserved 0111 = GP[7] 1111 = Reserved
3:0	PWM0TRG	PWM0 Trigger Source same selection as above.

Copyright © 2007–2012, Texas Instruments Incorporated

4.6.2.4 EDMATCCFG Register

The EDMA Transfer Controller Default Burst Size Configuration Register (EDMATCCFG) [0x01C4 0058] configures the default burst size (DBS) for EDMA TC0, EDMA TC1, EDMA TC2, and EDMA TC3. Figure 4-17 and Table 4-21 describe in detail the EDMATCCFG register. For more information on the correct usage of DBS, see the *TMS320DM646x DMSoC Enhanced Direct Memory Access (EDMA) Controller* User's Guide (literature number SPRUEQ5).

31	16
RESERVED	
R-0000 0000 0000 0000	

15 8	7 6	5 4	3 2	1 0
RESERVED	TC3DBS	TC2DBS	TC1DBS	TC0DBS
R-0000 0000	R/W-01	R/W-01	R/W-01	R/W-01

LEGEND: R/W = Read/Write; R = Read only; -*n* = value after reset

Figure 4-17. EDMA Transfer Controller Default Burst Size Configuration Register (EDMATCCFG) [0x01C4 0058]

Table 4-21. EDMATCCFG Register Bit Descriptions

BIT	NAME	DESCRIPTION
31:8	RESERVED	Reserved. Read-only, writes have no effect.
7:6	TC3DBS	EDMA TC3 Default Burst Size. 00 = 16 byte 01 = 32 byte [default] 10 = 64 byte 11 = reserved TC3 FIFO size is 256 bytes, regardless of Default Burst Size setting.
5:4	TC2DBS	EDMA TC2 Default Burst Size. 00 = 16 byte 01 = 32 byte [default] 10 = 64 byte 11 = reserved TC2 FIFO size is 256 bytes, regardless of Default Burst Size setting.
3:2	TC1DBS	EDMA TC1 Default Burst Size. 00 = 16 byte 01 = 32 byte [default] 10 = 64 byte 11 = reserved TC1 FIFO size is 256 bytes, regardless of Default Burst Size setting.
1:0	TC0DBS	EDMA TC0 Default Burst Size. 00 = 16 byte 01 = 32 byte [default] 10 = 64 byte 11 = reserved TC0 FIFO size is 256 bytes, regardless of Default Burst Size setting.

Copyright © 2007–2012, Texas Instruments Incorporated

4.7 Multiplexed Pin Configurations

DM6467 makes extensive use of pin multiplexing to accommodate a large number of peripheral function in the smallest possible package, providing the ultimate flexibility for end applications.

The Pin Multiplex Registers PINMUX0 and PINMUX1 in the System Module are responsiblie for controlling all pin multiplexing functions on the DM6467. The default setting of some of the PINMUX0 and PINMUX1 bit fields are configured by configuration pins latched at reset (see Section 4.5.1, *Device and Peripheral Configurations at Device Reset*). After reset, software may program the PINMUX0 and PINMUX1 registers to switch pin functionalities.

The following peripherals have multiplexed pins: VPIF, TSIF0, TSIF1, CRGEN0, CRGEN1, EMIFA, PCI, HPI, ATA, PWM0, PWM1, UART0, UART1, UART2, Audio Clock Selector, the USB USB_DRVVBUS pin, and GPIO.

4.7.1 Pin Muxing Selection At Reset

This section summarizes pin mux selection at reset.

The configuration pins CS2BW, PCIEN, and VADJEN, latched at device reset, determine the default pin muxing. For more details on the default pin muxing at reset, see Section 4.5, *Configurations At Reset*.

4.7.2 Pin Muxing Selection After Reset

The PINMUX0 and PINMUX1 registers in the System Module allow software to select the pin functions. Some pin functions require a combination of PINMUX0/PINMUX1 bit fields. For more details on the combination of the PINMUX bit fields that control each muxed pin, see Section 4.7.3, *Pin Multiplexing Details*.

This section only provides an overview of the PINMUX0 and PINMUX1 registers. For more detailed discussion on how to program each Pin Mux Block, see Section 4.7.3, *Pin Multiplexing Details*.

4.7.2.1 PINMUX0 Register Description

The Pin Multiplexing 0 Register controls the pin function in the EMIFA/ATA/HPI/PCI, TSIF0, TSIF1, CRGEN, Block. The PINMUX0 register format is shown in Figure 4-18 and the bit field descriptions are given in Table 4-22. Some muxed pins are controlled by more than one PINMUX bit field. For the combination of the PINMUX bit fields that control each muxed pin, see Section 4.7.3, *Pin Multiplexing Details*. For more information on the block pin muxing and pin-by-pin muxing control, see specific block muxing section (for example, for CRGEN Pin Mux Control, see Section 4.7.3.7, *CRGEN Signal Muxing*).

31	30	29	28	27	26 24	23 22	21 20	19 18	17 16
VBUSDIS	STCCK	AUDCK1	AUDCK0	RSV	CRGMUX	TSSOMUX	TSSIMUX	TSPOMUX	TSPIMUX
R/W-0	R/W-0	R/W-0	R/W-0	R-0	R/W-000	R/W-00	R/W-00	R/W-00	R/W-00

15 6	5	4 3	2	1	0
RESERVED	RSV	RESERVED	PCIEN	HPIEN	ATAEN
R-0000 0000 00	R/W-0	R-0	R/W-L	R/W-0	R/W-0

LEGEND: R/W = Read/Write; R = Read only; -*n* = value after reset

Figure 4-18. PINMUX0 Register [0x01C4 0000]

Table 4-22. PINMUX0 Register Bit Descriptions

BIT	NAME	DESCRIPTION
31	VBUSDIS	This bit disables USB_DRVVBUS output. 0 = USB_DRVVBUS function selected. 1 = GP[22] function selected.
30	STCCK	This bit enables STC Source Clock input. 0 = GP[4] function selected. 1 = STC_CLKIN function selected.
29	AUDCK1	This bit enables AUDIO_CLK1 output. 0 = GP[2] function selected. 1 = AUDIO_CLK1 function selected.
28	AUDCK0	This bit enables AUDIO_CLK0 output. 0 = GP[3] function selected. 1 = AUDIO_CLK0 function selected.
27	RSV	Reserved. Read returns "0".
26:24	CRGMUX	CRGEN Pin Mux Control (see Section 4.7.3.7, *CRGEN Signal Muxing*). 000 = No CRGEN signals enabled. 001 = CRGEN1 selection enabled (muxed with UART2 data). 010 = Reserved (no CRGEN signals enabled). 011 = Reserved (no CRGEN signals enabled). 100 = CRGEN0 selection enabled (muxed with UCTS2 and PWM0). 101 = CRGEN0 and CRGEN1 selection enabled. 110 = CRGEN0 selection enabled (muxed with UART2 data). 111 = Reserved (no CRGEN signals enabled).
23:22	TSSOMUX	TSIF1 Serial Output Pin Mux Control (see (1), *TSSO Signal Muxing*). 0x = No TS1 output signals enabled. 10 = TS1 output selection enabled (muxed on VP_DOUT pins). 11 = TS1 output selection enabled (muxed on URIN0, UCTS2, PWM0, and PWM1 pins).
21:20	TSSIMUX	TSIF1 Serial Input Pin Mux Control (see Section 4.7.3.5, *TSIF1 Input Signal Muxing*). 00 = No TS1 input signals enabled. 01 = TS1 input selection enabled (muxed on UART0 pins). 10 = TS1 input selection enabled (muxed on VP_DOUT pins). 11 = TS1 input selection enabled (muxed on VP_DIN pins).
19:18	TSPOMUX	TSIF0 Parallel/Serial Output Pin Mux Control (see Section 4.7.3.4, *TSIF0 Output Signal Muxing*). 0x = No TS0 output signals enabled. 10 = TS0 parallel output muxing enabled (muxed with VP_DIN pins). 11 = TS0 serial output muxing enabled (muxed TS0_DOUT7 with UTXD1).
17:16	TSPIMUX	TSIF0 Parallel/Serial Input Pin Mux Control (see Section 4.7.3.3, *TSIF0 Input Signal Muxing*). 0x = No TS0 signals enabled. 10 = TS0 parallel input muxing enabled (muxed with VP_DIN pins). 11 = TS0 serial input muxing enabled (muxed TS0_DIN7 with URXD1).
15:6	RESERVED	Reserved. Read returns "0".
5	RESERVED	Reserved. Read returns "0". **Note:** For proper device operation, when writing to this bit, only a "0" should be written.
4:3	RESERVED	Reserved. Read returns "0".
2	PCIEN	PCI Function Enable (see Section 4.7.3.1, *PCI, HPI, EMIFA and ATA Pin Muxing*). Default value is determined by PCIEN boot configuration pin.
1	HPIEN	HPI Function Enable (see Section 4.7.3.1, *PCI, HPI, EMIFA and ATA Pin Muxing*).
0	ATAEN	ATA Function Enable (see Section 4.7.3.1, *PCI, HPI, EMIFA and ATA Pin Muxing*).

(1) IPD = Internal pulldown, IPU = Internal pullup. For more detailed information on pullup/pulldown resistors and situations where external pullup/pulldown resistors are required, see Section 4.8.1, *Pullup/Pulldown Resistors*.

Copyright © 2007–2012, Texas Instruments Incorporated

4.7.2.2 PINMUX1 Register Description

The Pin Multiplexing 1 Register controls the pin function in the UART0, UART1, and UART2 Blocks. The PINMUX1 register format is shown in Figure 4-19 and the bit field descriptions are given in Table 4-23. Some muxed pins are controlled by more than one PINMUX bit field. For the combination of the PINMUX bit fields that control each muxed pin, see Section 4.7.3, *Pin Multiplexing Details*. For the pin-by-pin muxing control of the UART0, UART1, and UART2 Blocks, see Section 4.7.3.8, *UART0 Pin Muxing*; Section 4.7.3.9, *UART1 Pin Muxing*; and Section 4.7.3.10, *UART2 Pin Muxing*.

31	16
RESERVED	
R-0000 0000 0000 0000	

15	6	5	4	3	2	1	0
RESERVED		UART2CTL		UART1CTL		UART0CTL	
R-0000 0000 00		R/W-00		R/W-00		R/W-00	

LEGEND: R/W = Read/Write; R = Read only; -*n* = value after reset

Figure 4-19. PINMUX1 Register

Table 4-23. PINMUX1 Register Bit Descriptions

BIT	NAME	DESCRIPTION
31:6	RESERVED	Reserved. Read returns "0".
5:4	UART2CTL	UART2 Pin Configuration (see Section 4.7.3.10, *UART2 Pin Muxing*). 00 = UART function with flow control. 01 = UART function without flow control. 10 = IrDA/CIR function. 11 = GPIO function. (Individual pin functions may be overridden by TSPIMUX, CRGEN0, and CRGEN1 values.)
3:2	UART1CTL	UART1 Pin Configuration (see Section 4.7.3.9, *UART1 Pin Muxing*). 00 = UART function with flow control. 01 = UART function without flow control. 10 = IrDA/CIR function. 11 = GPIO function. (Individual pin functions may be overridden by TSPIMUX and TSPOMUX values.)
1:0	UART0CTL	UART0 Pin Configuration (see Section 4.7.3.8, *UART0 Pin Muxing*). 00 = UART function with modem control. 01 = UART function without modem control. 1x = IrDA/CIR function. (Individual pin functions may be overridden by TSPOMUX value.)

Copyright © 2007–2012, Texas Instruments Incorporated

4.7.3 Pin Multiplexing Details

This section discusses how to program each Pin Mux Register to select the desired peripheral functions and pin muxing. See the individual pin mux sections for pin muxing details for a specific muxed pin.

For details on PINMUX0 and PINMUX1 registers, see Section 4.7.2, *Pin Muxing Selection After Reset*.

4.7.3.1 PCI, HPI, EMIFA, and ATA Pin Muxing

The PCI, HPI, EMIFA, and ATA signal muxing is determined by the value of the PCIEN, HPIEN, and ATAEN bit fields in the PINMUX0 register. For more details on the actual pin functions, see Table 4-24 and Table 4-25.

Table 4-24. PCIEN, HPIEN, and ATAEN Encoding

PCIEN	HPIEN	ATAEN	PIN FUNCTIONS
0	0	0	EMIFA
0	0	1	EMIFA (NAND) and ATA
0	1	0	HPI (32-bit)
0	1	1	HPI (16-bit) and ATA
1	x	x	PCI(1)

(1) In PCI mode (PCIEN = 1), the internal pullups/pulldowns (IPUs/IPDs) are disabled on all PCI pins and it is recommended to have external pullup resistors on the PCI_RSV[5:0] pins. See Table 4-25 for the actual PCI pin functions and any associated footnotes.

Table 4-25. PCI, HPI, EMIFA, and ATA Pin Muxing

PIN FUNCTIONS (WITH PCIEN, HPIEN, ATAEN VALUES)				
1xx(1)	010	011	000	001
PCI_CLK	GP[10]	GP[10]	GP[10]	GP[10]
PCI_IDSEL	–	HDDIR	EM_R/$\overline{W}$	HDDIR
$\overline{PCI_DEVSEL}$	HCNTL1	HCNTL1	EM_BA[1]	EM_BA[1]
$\overline{PCI_FRAME}$	$\overline{HINT}$	$\overline{HINT}$	EM_BA[0]	EM_BA[0]
$\overline{PCI_IRDY}$	$\overline{HRDY}$	$\overline{HRDY}$	EM_A[17]	EM_A[17]/(CLE)
$\overline{PCI_TRDY}$	HHWIL	HHWIL	EM_A[16]	EM_A[16]/(ALE)
$\overline{PCI_STOP}$	HCNTL0	HCNTL0	$\overline{EM_WE}$	$\overline{EM_WE}$
$\overline{PCI_SERR}$	$\overline{HDS1}$	$\overline{HDS1}$	$\overline{EM_OE}$	$\overline{EM_OE}$
$\overline{PCI_PERR}$	$\overline{HCS}$	$\overline{HCS}$	$\overline{EM_DQM1}$	$\overline{EM_DQM1}$
PCI_PAR	$\overline{HAS}$	$\overline{HAS}$	$\overline{EM_DQM0}$	$\overline{EM_DQM0}$
$\overline{PCI_INTA}$	–	–	EM_WAIT2	EM_WAIT2/(RDY2/$\overline{BSY2}$)
$\overline{PCI_REQ}$	GP[11]	DMARQ	$\overline{EM_CS5}$	DMARQ
$\overline{PCI_GNT}$	GP[12]	$\overline{DACK}$	$\overline{EM_CS4}$	$\overline{DACK}$
$\overline{PCI_CBE3}$	HR/$\overline{W}$	HR/$\overline{W}$	$\overline{EM_CS3}$	$\overline{EM_CS3}$
$\overline{PCI_CBE2}$	$\overline{HDS2}$	$\overline{HDS2}$	$\overline{EM_CS2}$	$\overline{EM_CS2}$
$\overline{PCI_CBE1}$	GP[32]	$\overline{ATA_CS1}$	EM_A[19]	$\overline{ATA_CS1}$
$\overline{PCI_CBE0}$	GP[33]	$\overline{ATA_CS0}$	EM_A[18]	$\overline{ATA_CS0}$
PCI_AD31	HD31	DD15	EM_A[15]	DD15
PCI_AD30	HD30	DD14	EM_A[14]	DD14
PCI_AD29	HD29	DD13	EM_A[13]	DD13
PCI_AD28	HD28	DD12	EM_A[12]	DD12
PCI_AD27	HD27	DD11	EM_A[11]	DD11

(1) In PCI mode (PCIEN = 1), the internal pullups/pulldowns (IPUs/IPDs) are disabled on all PCI pins and it is recommended to have external pullup resistors on the PCI_RSV[5:0] pins. For more detailed information on external pullup/pulldown resistors, see Section 4.8.1, *Pullup/Pulldown Resistors*.

Copyright © 2007–2012, Texas Instruments Incorporated

Table 4-25. PCI, HPI, EMIFA, and ATA Pin Muxing (continued)

PIN FUNCTIONS (WITH PCIEN, HPIEN, ATAEN VALUES)				
1xx[1]	**010**	**011**	**000**	**001**
PCI_AD26	HD26	DD10	EM_A[10]	DD10
PCI_AD25	HD25	DD9	EM_A[9]	DD9
PCI_AD24	HD24	DD8	EM_A[8]	DD8
PCI_AD23	HD23	DD7	EM_A[7]	DD7
PCI_AD22	HD22	DD6	EM_A[6]	DD6
PCI_AD21	HD21	DD5	EM_A[5]	DD5
PCI_AD20	HD20	DD4	EM_A[4]	DD4
PCI_AD19	HD19	DD3	EM_A[3]	DD3
PCI_AD18	HD18	DD2	EM_A[2]	DD2
PCI_AD17	HD17	DD1	EM_A[1]	DD1
PCI_AD16	HD16	DD0	EM_A[0]	DD0
PCI_AD15	HD15	HD15	EM_D15	EM_D15
PCI_AD14	HD14	HD14	EM_D14	EM_D14
PCI_AD13	HD13	HD13	EM_D13	EM_D13
PCI_AD12	HD12	HD12	EM_D12	EM_D12
PCI_AD11	HD11	HD11	EM_D11	EM_D11
PCI_AD10	HD10	HD10	EM_D10	EM_D10
PCI_AD9	HD9	HD9	EM_D9	EM_D9
PCI_AD8	HD8	HD8	EM_D8	EM_D8
PCI_AD7	HD7	HD7	EM_D7	EM_D7
PCI_AD6	HD6	HD6	EM_D6	EM_D6
PCI_AD5	HD5	HD5	EM_D5	EM_D5
PCI_AD4	HD4	HD4	EM_D4	EM_D4
PCI_AD3	HD3	HD3	EM_D3	EM_D3
PCI_AD2	HD2	HD2	EM_D2	EM_D2
PCI_AD1	HD1	HD1	EM_D1	EM_D1
PCI_AD0	HD0	HD0	EM_D0	EM_D0
$\overline{\text{PCI_RST}}$	GP[13]	DA2	EM_A[22]	DA2
PCI_RSV0[2]	GP[16]	DA1	EM_A[21]	DA1
PCI_RSV1[2]	GP[17]	DA0	EM_A[20]	DA0
PCI_RSV2[2]	GP[18]	INTRQ	EM_RSV0	INTRQ
PCI_RSV3[2]	GP[19]	$\overline{\text{DIOR}}$	EM_WAIT5/(RDY5/$\overline{\text{BSY5}}$)	$\overline{\text{DIOR}}$
PCI_RSV4[2]	GP[20]	$\overline{\text{DIOW}}$	EM_WAIT4/(RDY4/$\overline{\text{BSY4}}$)	$\overline{\text{DIOW}}$
PCI_RSV5[2]	GP[21]	IORDY	EM_WAIT3/(RDY3/$\overline{\text{BSY3}}$)	IORDY

(2) In PCI mode (PCIEN = 1), the internal pullups/pulldowns (IPUs/IPDs) are disabled on all PCI pins and it is recommended to have external pullup resistors on the PCI_RSV[5:0] pins. For more detailed information on external pullup/pulldown resistors, see Section 4.8.1, *Pullup/Pulldown Resistors*.

Copyright © 2007–2012, Texas Instruments Incorporated

4.7.3.2 PWM Signal Muxing

The two PWM outputs will be configured as PWM pin functions by default. The PWM functions may be overridden by the settings of various PINMUX0 bit fields as shown in Table 4-26 and Table 4-27.

Table 4-26. PWM0 Pin Muxing

PIN FUNCTION		
CRGMUX ≠ 10x TSSOMUX ≠ 11	**CRGMUX = 10x TSSOMUX ≠ 11**	**TSSOMUX = 11**
PWM0	CRG0_PO	TS1_ENAO

Table 4-27. PWM1 Pin Muxing

PIN FUNCTION	
TSSOMUX ≠ 11	**TSSOMUX = 11**
PWM1	TS1_DOUT

Copyright © 2007–2012, Texas Instruments Incorporated

4.7.3.3 TSIF0 Input Signal Muxing (Serial/Parallel)

The TSIF 0 (TS0) input signals have muxing options for both parallel or serial operation as configured by the TPSIMUX bits as shown in Table 4-28.

Table 4-28. TSIF0 Input Pin Muxing

TSPIMUX = 0x (NO TSIF0 SIGNALS ENABLED)	TSPIMUX = 10 (PARALLEL)	TSPIMUX = 11 (SERIAL)
TS0_CLKIN	TS0_CLKIN	TS0_CLKIN
VP_DIN15_VSYNC	TS0_DIN7	VP_DIN15_VSYNC
VP_DIN14_HSYNC	TS0_DIN6	VP_DIN14_HSYNC
VP_DIN13_FIELD	TS0_DIN5	VP_DIN13_FIELD
VP_DIN12	TS0_DIN4	VP_DIN12
VP_DIN11	TS0_DIN3	VP_DIN11
VP_DIN10	TS0_DIN2	VP_DIN10
VP_DIN9	TS0_DIN1	VP_DIN9
VP_DIN8	TS0_DIN0	VP_DIN8
URXD1 (1)	URXD1 (1)	TS0_DIN7
UTXD1 (1)	UTXD1 (1)	(see Table 4-22—TSPOMUX bit field) (also see Table 4-35)
$\overline{\text{URTS1}}$ (1)	TS0_WAITO	TS0_WAITO
$\overline{\text{UCTS1}}$ (1)	TS0_EN_WAITO	TS0_EN_WAITO
$\overline{\text{URTS2}}$ (2)	TS0_PSTIN	TS0_PSTIN

(1) Function is determined by UART1CTL bit field value in the PINMUX0 register.
(2) Function is determined by UART2CTL bit field value in the PINMUX0 register.

Copyright © 2007–2012, Texas Instruments Incorporated

4.7.3.4 TSIF0 Output Signal Muxing (Serial/Parallel)

The TSIF 0 (TS0) output signals have muxing options for both parallel or serial operation as configured by the TPSOMUX bits as shown in Table 4-29.

Table 4-29. TSIF0 Output Pin Muxing

TSPOMUX = 0x		TSPOMUX = 10 (PARALLEL)	TSPOMUX = 11 (SERIAL)
UART0CTL = 00	UART0CTL ≠ 00		
VP_CLKO3	VP_CLKO3	TS0_CLKO	TS0_CLKO
VP_DIN7(1)	VP_DIN7(1)	TS0_DOUT7(1)	VP_DIN7(1)
VP_DIN6(1)	VP_DIN6(1)	TS0_DOUT6(1)	VP_DIN6(1)
VP_DIN5(1)	VP_DIN5(1)	TS0_DOUT5(1)	VP_DIN5(1)
VP_DIN4(1)	VP_DIN4(1)	TS0_DOUT4(1)	VP_DIN4(1)
VP_DIN3(1)	VP_DIN3(1)	TS0_DOUT3(1)	VP_DIN3(1)
VP_DIN2(1)	VP_DIN2(1)	TS0_DOUT2(1)	VP_DIN2(1)
VP_DIN1(1)	VP_DIN1(1)	TS0_DOUT1(1)	VP_DIN1(1)
VP_DIN0(1)	VP_DIN0(1)	TS0_DOUT0(1)	VP_DIN0(1)
$\overline{\text{UDTR0}}$	GP[36]	TS0_ENAO	TS0_ENAO
$\overline{\text{UDSR0}}$	GP[37]	TS0_PSTO	TS0_PSTO
$\overline{\text{UDCD0}}$	GP[38]	TS0_WAITIN	TS0_WAITIN
URIN0	GP[8]	GP[8]	GP[8]
URXD1(2)	URXD1(2)	URXD1(2)	(see Table 4-22—TSPIMUX bit field) (also see Table 4-35)
UTXD1(2)	UTXD1(2)	UTXD1(2)	TS0_DOUT7

(1) Function will be overridden by TSIF1 signals if TSSIMUX = 11 (PINMUX0 register).
(2) Function is determined by UART1CTL bit field value in the PINMUX1 register.

Copyright © 2007–2012, Texas Instruments Incorporated

4.7.3.5 TSIF1 Input Signal Muxing (Serial Only)

The TSIF 1 (TS1) input signals have three muxing options as configured by the TSSIMUX bits as shown in Table 4-30. When TSSIMUX = 11, the TSSI data and control pins are muxed onto the VP_DIN[7:4] regardless of the value of TSPOMUX.

Table 4-30. TSIF1 Serial Input Pin Muxing

TSSIMUX = 00	TSSIMUX = 01	TSSIMUX = 10	TSSIMUX = 11
TS1_CLKIN	TS1_CLKIN	TS1_CLKIN	TS1_CLKIN
VP_DIN7/TS0_DOUT7 (1)	VP_DIN7/TS0_DOUT7 (1)	VP_DIN7/TS0_DOUT7 (1)	TS1_DIN
VP_DIN6/TS0_DOUT6 (1)	VP_DIN6/TS0_DOUT6 (1)	VP_DIN6/TS0_DOUT6 (1)	TS1_PSTIN
VP_DIN5/TS0_DOUT5 (1)	VP_DIN5/TS0_DOUT5 (1)	VP_DIN5/TS0_DOUT5 (1)	TS1_EN_WAITO
VP_DIN4/TS0_DOUT4 (1)	VP_DIN4/TS0_DOUT4 (1)	VP_DIN4/TS0_DOUT4 (1)	TS1_WAITO
VP_DIN3/TS0_DOUT3 (1)	VP_DIN3/TS0_DOUT3 (1)	VP_DIN3/TS0_DOUT3 (1)	Hi-Z
VP_DIN2/TS0_DOUT2 (1)	VP_DIN2/TS0_DOUT2 (1)	VP_DIN2/TS0_DOUT2 (1)	Hi-Z
VP_DIN1/TS0_DOUT1 (1)	VP_DIN1/TS0_DOUT1 (1)	VP_DIN1/TS0_DOUT1 (1)	Hi-Z
VP_DIN0/TS0_DOUT0 (1)	VP_DIN0/TS0_DOUT0 (1)	VP_DIN0/TS0_DOUT0 (1)	Hi-Z
VP_DOUT15	VP_DOUT15	TS1_DIN	VP_DOUT15
VP_DOUT14	VP_DOUT14	TS1_PSTIN	VP_DOUT14
VP_DOUT13	VP_DOUT13	TS1_EN_WAITO	VP_DOUT13
VP_DOUT12	VP_DOUT12	TS1_WAITO	VP_DOUT12
URXD0 (2)	TS1_DIN	URXD0 (2)	URXD0 (2)
UTXD0 (2)	TS1_PSTIN	UTXD0 (2)	UTXD0 (2)
$\overline{\text{URTS0}}$ (2)	TS1_EN_WAITO	$\overline{\text{URTS0}}$ (2)	$\overline{\text{URTS0}}$ (2)
$\overline{\text{UCTS0}}$ (2)	USD0	$\overline{\text{UCTS0}}$ (2)	$\overline{\text{UCTS0}}$ (2)

(1) Function will be determined by TSPOMUX bit field value in the PINMUX0 register.
(2) Function is determined by UART0CTL bit field value in the PINMUX1 register

4.7.3.6 TSIF1 Output Signal Muxing (Serial Only)

The TSIF 1 (TS1) output signals are muxed with either the VP_DOUT signals or UART0, UART2, and PWM signals as selected by TSSOMUX (PINMUX0 register). The TS1 output pin muxing is shown in Table 4-31.

Table 4-31. TSIF1 Serial Output Pin Muxing

PIN FUNCTION		
TSSOMUX = 0x	**TSSOMUX = 10**	**TSSOMUX = 11**
VP_CLKIN3	TS1_CLKO	TS1_CLKO
VP_DOUT11	TS1_DOUT	VP_DOUT11
VP_DOUT10	TS1_PSTO	VP_DOUT10
VP_DOUT9	TS1_ENAO	VP_DOUT9
VP_DOUT8	TS1_WAITIN	VP_DOUT8
URIN0/GP[8](1)	URIN0/GP[8](1)	TS1_WAITIN
$\overline{\text{UCTS2}}$/GP[42]/CRG0_VCXI(2)	$\overline{\text{UCTS2}}$/GP[42]/CRG0_VCXI(2)	TS1_PSTO
PWM0/CRG0_PO(3)	PWM0/CRG0_PO(3)	TS1_ENAO
PWM1	PWM1	TS1_DOUT

(1) Function will be determined by UART0CTL bit field value in the PINMUX1 register.
(2) Function will be determined by UART2CTL and CRGMUX bit field values in the PINMUX1 and PINMUX0 registers, respectively.
(3) Function will be determined by CRGMUX bit field value in the PINMUX0 register.

Copyright © 2007–2012, Texas Instruments Incorporated

4.7.3.7 CRGEN Signal Muxing

The two CRGEN modules share pins with UART2 and PWM0. The CRGEN function is selected using the CRGMUX bit field in the PINMUX0 register (see Table 4-32).

Table 4-32. CRG Pin Muxing

PIN FUNCTION				
CRGMUX = 001	**CRGMUX = 100**	**CRGMUX = 101**	**CRGMUX = 110**	**CRGMUX = other**
PWM0(1)	CRG0_PO(1)	CRG0_PO(1)	PWM0(1)	PWM0(1)
$\overline{\text{UCTS2}}$ (2) (3)	CRG0_VCXI(3)	CRG0_VCXI(3)	$\overline{\text{UCTS2}}$ (2) (3)	$\overline{\text{UCTS2}}$ (2) (3)
CRG1_VCXI	URXD2(2)	CRG1_VCXI	CRG0_VCXI	URXD2(2)
CRG1_PO	UTXD2(2)	CRG1_PO	CRG0_PO	UTXD2(2)

(1) Function will be overridden by TS1_ENAO pin if TSSOMUX = 11 (PINMUX0 register).
(2) Function is determined by UART2CTL bit field value in the PINMUX1 register.
(3) Function will be overridden by TS1_PSTO if TSSOMUX = 11 (PINMUX0 register).

Copyright © 2007–2012, Texas Instruments Incorporated

4.7.3.8 UART0 Pin Muxing

The UART0 module can operate as either a UART or IrDA/CIR interface. The UART0 pin muxing is controlled by the UART0CTL bit field in the PINMUX1 register and the TSPOMUX, TSSIMUX, and TSSOMUX bit fields in the PINMUX0 register. Muxing options are shown in Table 4-33 and Table 4-34. When UART operation is selected, UART0CTL must be set to either '00' for UART with modem signals or '01' for UART without modem signals. When IrDA/CIR operation is selected, UART0CTL must be set to '1x' to use the IrDA/CIR signals and the modem signal become GPIOs. A TSPOMUX setting of '1x' overrides the modem control mux settings. UART0 can still be used as a UART without modem control or in IrDA/CIR mode based on the UART0CTL bit field value. A TSSIMUX setting of '01' overrides the UART data and flow control settings and prevents UART0 from being used. The UART0 modem control pins may be used as either TSIF 0 output or GPIO pins based on the TSPOMUX and UART0CTL settings. A TSSOMUX setting of '11' overrides the RIN function with the TS1_WAITIN function.

Table 4-33. UART0 Pin Muxing—Part 1

TSSIMUX[1]	TSSIMUX[0]	UART0CTL[1]	UART0CTL[0]	PIN FUNCTIONS			
				URXD0/ TS1_DIN	UTXD0/ URCTX0/ TS1_PSTIN	$\overline{\text{URTS0}}$ / UIRTX0/ TS1_EN_WAITO	$\overline{\text{UCTS0}}$ / USD0
0	0	0	0	URXD0	UTXD0	$\overline{\text{URTS0}}$	$\overline{\text{UCTS0}}$
0	0	0	1	URXD0	UTXD0	$\overline{\text{URTS0}}$	$\overline{\text{UCTS0}}$
0	0	1	0	URXD0	URCTX0	UIRTX0	USD0
0	0	1	1	URXD0	URCTX0	UIRTX0	USD0
0	1	0	0	TS1_DIN	TS1_PSTIN	TS1_EN_WAITO	–
0	1	0	1	TS1_DIN	TS1_PSTIN	TS1_EN_WAITO	–
0	1	1	0	TS1_DIN	TS1_PSTIN	TS1_EN_WAITO	–
0	1	1	1	TS1_DIN	TS1_PSTIN	TS1_EN_WAITO	–
1	x	0	0	URXD0	UTXD0	$\overline{\text{URTS0}}$	$\overline{\text{UCTS0}}$
1	x	0	1	URXD0	UTXD0	$\overline{\text{URTS0}}$	$\overline{\text{UCTS0}}$
1	x	1	0	URXD0	URCTX0	UIRTX0	USD0
1	x	1	1	URXD0	URCTX0	UIRTX0	USD0

Copyright © 2007–2012, Texas Instruments Incorporated

Table 4-34. UART0 Pin Muxing—Part 2

TSSOMUX[1]	TSSOMUX[0]	TSPOMUX[1]	TSPOMUX[0]	UART0CTL[1]	UART0CTL[0]	PIN FUNCTIONS			
						$\overline{\text{UDTR0}}$ / TS0_ENAO/ GP[36]	$\overline{\text{UDSR0}}$ / TS0_PSTO/ GP[37]	$\overline{\text{UDCD0}}$ / TS0_WAITIN/ GP[38]	URIN0/ GP[8]/ TS1_WAITIN
0	x	0	x	0	0	$\overline{\text{UDTR0}}$	$\overline{\text{UDSR0}}$	$\overline{\text{UDCD0}}$	URIN0
0	x	0	x	0	1	GP[36]	GP[37]	GP[38]	GP[8]
0	x	0	x	1	0	GP[36]	GP[37]	GP[38]	GP[8]
0	x	0	x	1	1	GP[36]	GP[37]	GP[38]	GP[8]
0	x	1	x	0	0	TS0_ENAO	TS0_PSTO	TS0_WAITIN	GP[8]
0	x	1	x	0	1	TS0_ENAO	TS0_PSTO	TS0_WAITIN	GP[8]
0	x	1	x	1	0	TS0_ENAO	TS0_PSTO	TS0_WAITIN	GP[8]
0	x	1	x	1	1	TS0_ENAO	TS0_PSTO	TS0_WAITIN	GP[8]
1	0	0	x	0	0	$\overline{\text{UDTR0}}$	$\overline{\text{UDSR0}}$	$\overline{\text{UDCD0}}$	URIN0
1	0	0	x	0	1	GP[36]	GP[37]	GP[38]	GP[8]
1	0	0	x	1	0	GP[36]	GP[37]	GP[38]	GP[8]
1	0	0	x	1	1	GP[36]	GP[37]	GP[38]	GP[8]
1	0	1	x	0	0	TS0_ENAO	TS0_PSTO	TS0_WAITIN	GP[8]
1	0	1	x	0	1	TS0_ENAO	TS0_PSTO	TS0_WAITIN	GP[8]
1	0	1	x	1	0	TS0_ENAO	TS0_PSTO	TS0_WAITIN	GP[8]
1	0	1	x	1	1	TS0_ENAO	TS0_PSTO	TS0_WAITIN	GP[8]
1	1	0	x	0	0	$\overline{\text{UDTR0}}$	$\overline{\text{UDSR0}}$	$\overline{\text{UDCD0}}$	TS1_WAITIN
1	1	0	x	0	1	GP[36]	GP[37]	GP[38]	TS1_WAITIN
1	1	0	x	1	0	GP[36]	GP[37]	GP[38]	TS1_WAITIN
1	1	0	x	1	1	GP[36]	GP[37]	GP[38]	TS1_WAITIN
1	1	1	x	0	0	TS0_ENAO	TS0_PSTO	TS0_WAITIN	TS1_WAITIN
1	1	1	x	0	1	TS0_ENAO	TS0_PSTO	TS0_WAITIN	TS1_WAITIN
1	1	1	x	1	0	TS0_ENAO	TS0_PSTO	TS0_WAITIN	TS1_WAITIN
1	1	1	x	1	1	TS0_ENAO	TS0_PSTO	TS0_WAITIN	TS1_WAITIN

Copyright © 2007–2012, Texas Instruments Incorporated

4.7.3.9 UART1 Pin Muxing

The UART1 module can operate as either a UART or IrDA/CIR interface. The UART1 pin muxing options are shown in Table 4-35. When UART operation is selected, UART1CTL must be set to either '00' for UART with flow control or '01' for UART without flow control signals. When IrDA/CIR operation is selected, UART1CTL must be set to '10' to use the IrDA/CIR signals. If UART1 is unused, then setting UART1CTL = 11 muxes GPIO function onto all the pins. The UART1 pin functions may be overridden based on the settings of TSPIMUX and TSPOMUX

Table 4-35. UART1 Pin Muxing

TSPIMUX[1]	TSPIMUX[0]	TSPOMUX[1]	TSPOMUX[0]	UART1CTL[1]	UART1CTL[0]	PIN FUNCTIONS			
						URXD1/ TS0_DIN7/ GP[23]	UTXD1/ URCTX1/ TS0_DOUT7/ GP[24]	$\overline{\text{URTS1}}$ / UIRTX1/ TS0_WAITO/ GP[25]	$\overline{\text{UCTS1}}$ / USD1/ TS0_EN_WAITO/ GP[26]
0	x	0	x	0	0	URXD1	UTXD1	$\overline{\text{URTS1}}$	$\overline{\text{UCTS1}}$
0	x	0	x	0	1	URXD1	UTXD1	GP[25]	GP[26]
0	x	0	x	1	0	URXD1	URCTX1	UIRTX1	USD1
0	x	0	x	1	1	GP[23]	GP[24]	GP[25]	GP[26]
0	x	1	0	0	0	URXD1	UTXD1	$\overline{\text{URTS1}}$	$\overline{\text{UCTS1}}$
0	x	1	0	0	1	URXD1	UTXD1	GP[25]	GP[26]
0	x	1	0	1	0	URXD1	URCTX1	UIRTX1	USD1
0	x	1	0	1	1	GP[23]	GP[24]	GP[25]	GP[26]
0	x	1	1	0	0	URXD1	TS0_DOUT7	$\overline{\text{URTS1}}$	$\overline{\text{UCTS1}}$
0	x	1	1	0	1	URXD1	TS0_DOUT7	GP[25]	GP[26]
0	x	1	1	1	0	URXD1	TS0_DOUT7	UIRTX1	USD1
0	x	1	1	1	1	GP[23]	TS0_DOUT7	GP[25]	GP[26]
1	0	0	x	0	x	URXD1	UTXD1	TS0_WAITO	TS0_EN_WAITO
1	0	0	x	1	0	URXD1	URCTX1	TS0_WAITO	TS0_EN_WAITO
1	0	0	x	1	1	GP[23]	GP[24]	TS0_WAITO	TS0_EN_WAITO
1	0	1	0	0	x	URXD1	UTXD1	TS0_WAITO	TS0_EN_WAITO
1	0	1	0	1	0	URXD1	URCTX1	TS0_WAITO	TS0_EN_WAITO
1	0	1	0	1	1	GP[23]	GP[24]	TS0_WAITO	TS0_EN_WAITO
1	0	1	1	0	x	URXD1	TS0_DOUT7	TS0_WAITO	TS0_EN_WAITO
1	0	1	1	1	0	URXD1	TS0_DOUT7	TS0_WAITO	TS0_EN_WAITO
1	0	1	1	1	1	GP[23]	TS0_DOUT7	TS0_WAITO	TS0_EN_WAITO
1	1	0	x	0	x	TS0_DIN7	UTXD1	TS0_WAITO	TS0_EN_WAITO
1	1	0	x	1	0	TS0_DIN7	URCTX1	TS0_WAITO	TS0_EN_WAITO
1	1	0	x	1	1	TS0_DIN7	GP[24]	TS0_WAITO	TS0_EN_WAITO
1	1	1	0	0	x	TS0_DIN7	UTXD1	TS0_WAITO	TS0_EN_WAITO
1	1	1	0	1	0	TS0_DIN7	URCTX1	TS0_WAITO	TS0_EN_WAITO
1	1	1	0	1	1	TS0_DIN7	GP[24]	TS0_WAITO	TS0_EN_WAITO
1	1	1	1	x	x	TS0_DIN7	TS0_DOUT7	TS0_WAITO	TS0_EN_WAITO

Copyright © 2007–2012, Texas Instruments Incorporated

4.7.3.10 UART2 Pin Muxing

The UART2 module can operate as either a UART or IrDA/CIR interface. The UART2 pin muxing options are shown in Table 4-36 through Table 4-38. When UART operation is selected, UART2CTL must be set to either '00' for UART with flow control or '01' for UART without flow control signals. When IrDA/CIR operation is selected, UART2CTL must be set to '10' to use the IrDA/CIR signals. If UART2 is unused, then setting UART2CTL = 11 muxes GPIO function onto all the pins. The UART2 pin functions may be overridden based on the settings of TSPIMUX, CRGMUX, and TSSOMUX.

Table 4-36. UART2 Data Pin Muxing

CRGMUX[2]	CRGMUX[1]	CRGMUX[0]	UART2CTL[1]	UART2CTL[0]	PIN FUNCTIONS	
					URXD2/ CRG1_VCXI/ GP[39]/ CRG0_VCXI	UTXD2/ URCTX2/ CRG1_PO/ GP[40]/ CRG0_PO
0	0	0	0	0	URXD2	UTXD2
0	0	0	0	1	URXD2	UTXD2
0	0	0	1	0	URXD2	URCTX2
0	0	0	1	1	GP[39]	GP[40]
0	0	1	0	0	CRG1_VCXI	CRG1_PO
0	0	1	0	1	CRG1_VCXI	CRG1_PO
0	0	1	1	0	CRG1_VCXI	CRG1_PO
0	0	1	1	1	CRG1_VCXI	CRG1_PO
0	1	0	0	0	URXD2	UTXD2
0	1	0	0	1	URXD2	UTXD2
0	1	0	1	0	URXD2	URCTX2
0	1	0	1	1	GP[39]	GP[40]
0	1	1	0	0	URXD2	UTXD2
0	1	1	0	1	URXD2	UTXD2
0	1	1	1	0	URXD2	URCTX2
0	1	1	1	1	GP[39]	GP[40]
1	0	0	0	0	URXD2	UTXD2
1	0	0	0	1	URXD2	UTXD2
1	0	0	1	0	URXD2	URCTX2
1	0	0	1	1	GP[39]	GP[40]
1	0	1	0	0	CRG1_VCXI	CRG1_PO
1	0	1	0	1	CRG1_VCXI	CRG1_PO
1	0	1	1	0	CRG1_VCXI	CRG1_PO
1	0	1	1	1	CRG1_VCXI	CRG1_PO
1	1	0	0	0	CRG0_VCXI	CRG0_PO
1	1	0	0	1	CRG0_VCXI	CRG0_PO
1	1	0	1	0	CRG0_VCXI	CRG0_PO
1	1	0	1	1	CRG0_VCXI	CRG0_PO
1	1	1	0	0	URXD2	UTXD2
1	1	1	0	1	URXD2	UTXD2
1	1	1	1	0	URXD2	URCTX2
1	1	1	1	1	GP[39]	GP[40]

Copyright © 2007–2012, Texas Instruments Incorporated

Table 4-37. UART2 Ready-to-Send ($\overline{\text{URTS2}}$) Pin Muxing

TSPIMUX[1]	TSPIMUX[0]	UART2CTL[1]	UART2CTL[0]	PIN FUNCTION
				$\overline{\text{URTS2}}$ / UIRTX2/ TS0_PSTIN/ GP[41]
0	x	0	0	$\overline{\text{URTS2}}$
0	x	0	1	GP[41]
0	x	1	0	UIRTX2
0	x	1	1	GP[41]
1	x	x	x	TS0_PSTIN

Table 4-38. UART2 Clear-to-Send ($\overline{\text{UCTS2}}$) Pin Muxing

TSSOMUX ≠ 11					PIN FUNCTION	TSSOMUX = 11					PIN FUNCTION
CRGMUX[2]	CRGMUX[1]	CRGMUX[0]	UART2CTL[1]	UART2CTL[0]	$\overline{\text{UCTS2}}$ / USD2/ CRG0_VCXI/ GP[42]/ TS1_PSTO	CRGMUX[2]	CRGMUX[1]	CRGMUX[0]	UART2CTL[1]	UART2CTL[0]	$\overline{\text{UCTS2}}$ / USD2/ CRG0_VCXI/ GP[42]/ TS1_PSTO
0	0	0	0	0	$\overline{\text{UCTS2}}$	0	0	0	0	0	TS1_PSTO
0	0	0	0	1	GP[42]	0	0	0	0	1	TS1_PSTO
0	0	0	1	0	USD2	0	0	0	1	0	TS1_PSTO
0	0	0	1	1	GP[42]	0	0	0	1	1	TS1_PSTO
0	0	1	0	0	$\overline{\text{UCTS2}}$	0	0	1	0	0	TS1_PSTO
0	0	1	0	1	GP[42]	0	0	1	0	1	TS1_PSTO
0	0	1	1	0	USD2	0	0	1	1	0	TS1_PSTO
0	0	1	1	1	GP[42]	0	0	1	1	1	TS1_PSTO
0	1	0	0	0	$\overline{\text{UCTS2}}$	0	1	0	0	0	TS1_PSTO
0	1	0	0	1	GP[42]	0	1	0	0	1	TS1_PSTO
0	1	0	1	0	USD2	0	1	0	1	0	TS1_PSTO
0	1	0	1	1	GP[42]	0	1	0	1	1	TS1_PSTO
0	1	1	0	0	$\overline{\text{UCTS2}}$	0	1	1	0	0	TS1_PSTO
0	1	1	0	1	GP[42]	0	1	1	0	1	TS1_PSTO
0	1	1	1	0	USD2	0	1	1	1	0	TS1_PSTO
0	1	1	1	1	GP[42]	0	1	1	1	1	TS1_PSTO
1	0	0	0	0	CRG0_VCXI	1	0	0	0	0	TS1_PSTO
1	0	0	0	1	CRG0_VCXI	1	0	0	0	1	TS1_PSTO
1	0	0	1	0	CRG0_VCXI	1	0	0	1	0	TS1_PSTO
1	0	0	1	1	CRG0_VCXI	1	0	0	1	1	TS1_PSTO
1	0	1	0	0	CRG0_VCXI	1	0	1	0	0	TS1_PSTO
1	0	1	0	1	CRG0_VCXI	1	0	1	0	1	TS1_PSTO
1	0	1	1	0	CRG0_VCXI	1	0	1	1	0	TS1_PSTO
1	0	1	1	1	CRG0_VCXI	1	0	1	1	1	TS1_PSTO
1	1	0	0	0	$\overline{\text{UCTS2}}$	1	1	0	0	0	TS1_PSTO
1	1	0	0	1	GP[42]	1	1	0	0	1	TS1_PSTO
1	1	0	1	0	USD2	1	1	0	1	0	TS1_PSTO
1	1	0	1	1	GP[42]	1	1	0	1	1	TS1_PSTO
1	1	1	0	0	$\overline{\text{UCTS2}}$	1	1	1	0	0	TS1_PSTO
1	1	1	0	1	GP[42]	1	1	1	0	1	TS1_PSTO
1	1	1	1	0	USD2	1	1	1	1	0	TS1_PSTO
1	1	1	1	1	GP[42]	1	1	1	1	1	TS1_PSTO

Copyright © 2007–2012, Texas Instruments Incorporated

4.7.3.11 SmartReflex and GPIO Pin Muxing

The SmartReflex and GPIO signal muxing is determined by the value of the VADJEN pin (AB7) at reset. For more details on the actual pin functions, see Table 4-39. For more detailed information on SmartReflex, see Section 7.3.6, *SmartReflex (Voltage Scaling)*.

Table 4-39. SmartReflex and GPIO Pin Muxing

PIN FUNCTION	
VADJEN = 0 SmartReflex Disabled.	**VADJEN = 1 SmartReflexControl Outputs Enabled**
GP[7] and GP[6]	CVDDADJ[1:0] 00 = device operates at 1.2 V core power supply *only* (-594V, -594AV devcies *only*) 11 = device can operate at 1.05 V core power supply (-594V, -594AV devcies *only*) All other settings RESERVED. The value of these pins is also stored in the SmartReflex Status Register (SMTREFLEX) [see Figure 7-7].

4.7.3.12 ARM/DSP Communications Interrupts

The system module includes registers for generating interrupts between the ARM and DSP.

The DSPINT register shows the status of the ARM-to-DSP interrupts. The DSPINT register format is shown in Figure 4-20. Table 4-40 describes the register bit fields. The ARM may generate an interrupt to the DSP by setting one of the four INTDSP[3:0] bits or by setting the INTNMI bit in the DSPINTSET pseudo-register (see Figure 4-21). The interrupt set bit then self-clears and the corresponding INTDSP[3:0] ***or*** INTNMI bit in the DSPINT status register (see Figure 4-20) is automatically set to indicate that the interrupt was generated. After servicing the interrupt, the DSP clears the status bit by writing '1' to the corresponding bit in the DSPINTCLR register (see Figure 4-22). The ARM may poll the status bit to determine when the DSP has completed the interrupt service.

The DSP may generate an interrupt to the ARM in the same manner using the ARMINTSET and ARMINTCLR registers shown/described in Figure 4-24, Table 4-44, and Figure 4-25, Table 4-45, respectively. The DSP can then view the status of the DSP-to-ARM interrupts via the ARMINT register shown/described in Figure 4-23 and Table 4-43.

31	30	29	28	27	26	25	24	23	22	21	20	19	18	17	16
Reserved															
R-0000 0000 0000 0000															
15	14	13	12	11	10	9	8	7	6	5	4	3	2	1	0
Reserved							INTNMI	Reserved				INTDSP3	INTDSP2	INTDSP1	INTDSP0
R-0000 000							R-0	R-0000				R-0	R-0	R-0	R-0

LEGEND: R = Read only, n = Value at reset

Figure 4-20. DSPINT Status Register [0x01C4 0060]

Table 4-40. DSPINT Status Register Bit Descriptions(1)

BIT	NAME	DESCRIPTION
31:9	Reserved	Reserved. A read returns 0.
8	INTNMI	DSP NMI Status
7:4	Reserved	Reserved. A read returns 0.
3	INTDSP3	ARM-to-DSP Int3 Status
2	INTDSP2	ARM-to-DSP Int2 Status
1	INTDSP1	ARM-to-DSP Int1 Status
0	INTDSP0	ARM-to-DSP Int0 Status

(1) Read only, writes have no effect.

Copyright © 2007–2012, Texas Instruments Incorporated

31	30	29	28	27	26	25	24	23	22	21	20	19	18	17	16
Reserved															
R-0000 0000 0000 0000															

15	14	13	12	11	10	9	8	7	6	5	4	3	2	1	0
Reserved							INTNMI	Reserved				INTDSP3	INTDSP2	INTDSP1	INTDSP0
R-0000 000							R/W-0	R-0000				R/W-0	R/W-0	R/W-0	R/W-0

LEGEND: R = Read, W = Write, n = Value at reset

Figure 4-21. DSPINTSET Register [0x01C4 0064]

Table 4-41. DSPINTSET Register Bit Descriptions

BIT	NAME	DESCRIPTION
31:9	Reserved	Reserved. A read returns 0.
8	INTNMI	DSP NMI Set(1)
7:4	Reserved	Reserved. A read returns 0.
3	INTDSP3	ARM-to-DSP Int3 Set(1)
2	INTDSP2	ARM-to-DSP Int2 Set(1)
1	INTDSP1	ARM-to-DSP Int1 Set(1)
0	INTDSP0	ARM-to-DSP Int0 Set(1)

(1) Writing a '1' generates the interrupt and sets the corresponding bit in the DSPINT status register. The register bit automatically clears to a value of '0'. Writing a '0' has no effect. This register always reads as '0'.

31	30	29	28	27	26	25	24	23	22	21	20	19	18	17	16
Reserved															
R-0000 0000 0000 0000															

15	14	13	12	11	10	9	8	7	6	5	4	3	2	1	0
Reserved							INTNMI	Reserved				INTDSP3	INTDSP2	INTDSP1	INTDSP0
R-0000 000							R/W-0	R-0000				R/W-0	R/W-0	R/W-0	R/W-0

LEGEND: R = Read, W = Write, n = Value at reset

Figure 4-22. DSPINTCLR Register [0x01C4 0068]

Table 4-42. DSPINTCLR Register Bit Descriptions

BIT	NAME	DESCRIPTION
31:9	Reserved	Reserved. A read returns 0.
8	INTNMI	DSP NMI Clear(1)
7:4	Reserved	Reserved. A read returns 0.
3	INTDSP3	ARM-to-DSP Int3 Clear(1)
2	INTDSP2	ARM-to-DSP Int2 Clear(1)
1	INTDSP1	ARM-to-DSP Int1 Clear(1)
0	INTDSP0	ARM-to-DSP Int0 Clear(1)

(1) Writing a '1' clears the corresponding bit in the DSPINT status register. The register bit automatically clears to a value of '0'. Writing a '0' has no effect. This register always reads as '0'.

Copyright © 2007–2012, Texas Instruments Incorporated

31	30	29	28	27	26	25	24	23	22	21	20	19	18	17	16
Reserved															
R-0000 0000 0000 0000															

15	14	13	12	11	10	9	8	7	6	5	4	3	2	1	0
Reserved															INTARM0
R-0000 0000 0000 000															R-0

LEGEND: R = Read only, n = Value at reset

Figure 4-23. ARMINT Status Register [0x01C4 0070]

Table 4-43. ARMINT Status Register Bit Descriptions(1)

BIT	NAME	DESCRIPTION
31:1	Reserved	Reserved. A read returns 0.
0	INTARM0	DSP-to-ARM Int0 Status

(1) Read only, writes have no effect.

31	30	29	28	27	26	25	24	23	22	21	20	19	18	17	16
Reserved															
R-0000 0000 0000 0000															

15	14	13	12	11	10	9	8	7	6	5	4	3	2	1	0
Reserved															INTARM0
R-0000 0000 0000 000															R/W-0

LEGEND: R = Read, W = Write, n = Value at reset

Figure 4-24. ARMINTSET Register [0x01C4 0074]

Table 4-44. ARMINTSET Register Bit Descriptions

BIT	NAME	DESCRIPTION
31:1	Reserved	Reserved. A read returns 0.
0	INTARM0	DSP-to-ARM Int0 Set(1)

(1) Writing a '1' generates the interrupt and sets the corresponding bit in the ARMINT status register. The register bit automatically clears to a value of '0'. Writing a '0' has no effect. This register always reads as '0'.

Copyright © 2007–2012, Texas Instruments Incorporated

31	30	29	28	27	26	25	24	23	22	21	20	19	18	17	16
Reserved															
R-0000 0000 0000 0000															

15	14	13	12	11	10	9	8	7	6	5	4	3	2	1	0
Reserved															INTARM0
R-0000 0000 0000 000															R/W-0

LEGEND: R = Read, W = Write, n = Value at reset

Figure 4-25. ARMINTCLR Register [0x01C4 0078]

Table 4-45. ARMINTCLR Register Bit Descriptions

BIT	NAME	DESCRIPTION
31:1	Reserved	Reserved. A read returns 0.
0	INTARM0	DSP-to-ARM Int0 Clear(1)

(1) Writing a '1' clears the corresponding bit in the ARMINT status register. The register bit automatically clears to a value of '0'. Writing a '0' has no effect. This register always reads as '0'.

4.7.3.13 Emulation Control

The flexibility of the DM646x DMSoC architecture allows either the ARM or DSP to control the various peripherals (setup registers, service interrupts, etc.). While this assignment is purely a matter of software convention, during an emulation halt it is necessary for the device to know which peripherals are associated with the halting processor so that only those modules receive the suspend signal. This allows peripherals associated with the other (unhalted) processor to continue normal operation. The SUSPSRC register indicates the emulation suspend source for those peripherals which support emulation suspend.

The SUSPSRC register format is shown in Figure 4-26. Brief details on the peripherals which correspond to the register bits are listed in Table 4-46. When the associated SUSPSRC bit is '0', the peripheral's emulation suspend signal is controlled by the ARM emulator and when set to '1' it is controlled by the DSP emulator.

31	30	29	28	27	26	25	24	23	22	21	20	19	18	17	16
CRGEN1 SRC	CRGEN0 SRC	TIMR2 SRC	TIMR1 SRC	TIMR0 SRC	GPIO SRC	RSV	PWM1 SRC	PWM0 SRC	SPI SRC	UART2 SRC	UART1 SRC	UART0 SRC	I2C SRC	MCASP1 SRC	MCASP0 SRC
R/W-0	R/W-0	R/W-0	R/W-0	R/W-0	R/W-0	R-0	R/W-0	R/W-0	R/W-0	R/W-0	R/W-0	R/W-0	R/W-0	R/W-0	R/W-0

15	13	12	11	10	9	8	7	6	5	4	3	0
RESERVED		HPI SRC	RSV	EMAC SRC	USB SRC	VDCE SRC	TSIF1 SRC	TSIF0 SRC	RSV	VPIF SRC	RESERVED	
R-000		R/W-0	R-0	R/W-0	R/W-0	R/W-0	R/W-0	R/W-0	R-0	R/W-0	R-0000	

LEGEND: R/W = Read/Write; R = Read only; -*n* = value after reset

Figure 4-26. SUSPSRC Register

Table 4-46. SUSPSRC Register Bit Descriptions

BIT	NAME	DESCRIPTION
31	CRGEN1SRC	Clock Recovery Generator 1 Emulation Suspend Source. 0 = ARM emulation suspend. 1 = DSP emulation suspend.
30	CRGEN0SRC	Clock Recovery Generator 0 Emulation Suspend Source. 0 = ARM emulation suspend. 1 = DSP emulation suspend.
29	TIMR2SRC	Timer2 (WD Timer) Emulation Suspend Source. 0 = ARM emulation suspend. 1 = DSP emulation suspend.
28	TIMR1SRC	Timer1 Emulation Suspend Source. 0 = ARM emulation suspend. 1 = DSP emulation suspend.
27	TIMR0SRC	Timer0 Emulation Suspend Source. 0 = ARM emulation suspend. 1 = DSP emulation suspend.
26	GPIOSRC	GPIO Emulation Suspend Source. 0 = ARM emulation suspend. 1 = DSP emulation suspend.
25	RSV	Reserved. Read returns "0".
24	PWM1SRC	PWM1 Emulation Suspend Source. 0 = ARM emulation suspend. 1 = DSP emulation suspend.
23	PWM0SRC	PWM0 Emulation Suspend Source. 0 = ARM emulation suspend. 1 = DSP emulation suspend.
22	SPISRC	SPI Emulation Suspend Source. 0 = ARM emulation suspend. 1 = DSP emulation suspend.
21	UART2SRC	UART2 Emulation Suspend Source. 0 = ARM emulation suspend. 1 = DSP emulation suspend.

Copyright © 2007–2012, Texas Instruments Incorporated

Table 4-46. SUSPSRC Register Bit Descriptions (continued)

BIT	NAME	DESCRIPTION
20	UART1SRC	UART1 Emulation Suspend Source. 0 = ARM emulation suspend. 1 = DSP emulation suspend.
19	UART0SRC	UART0 Emulation Suspend Source. 0 = ARM emulation suspend. 1 = DSP emulation suspend.
18	I2CSRC	I2C Emulation Suspend Source. 0 = ARM emulation suspend. 1 = DSP emulation suspend.
17	MCASP1SRC	McASP1 Emulation Suspend Source. 0 = ARM emulation suspend. 1 = DSP emulation suspend.
16	MCASP0SRC	McASP0 Emulation Suspend Source. 0 = ARM emulation suspend. 1 = DSP emulation suspend.
15:13	RESERVED	Reserved. Read returns "0".
12	HPISRC	HPI Emulation Suspend Source. 0 = ARM emulation suspend. 1 = DSP emulation suspend.
11	RSV	Reserved. Read returns "0".
10	EMACSRC	Ethernet MAC Emulation Suspend Source. 0 = ARM emulation suspend. 1 = DSP emulation suspend.
9	USBSRC	USB Emulation Suspend Source. 0 = ARM emulation suspend. 1 = DSP emulation suspend.
8	VDCESRC	VDCE Emulation Suspend Source. 0 = ARM emulation suspend. 1 = DSP emulation suspend.
7	TSIF1SRC	TSIF1 Emulation Suspend Source. 0 = ARM emulation suspend. 1 = DSP emulation suspend.
6	TSIF0SRC	TSIF0 Emulation Suspend Source. 0 = ARM emulation suspend. 1 = DSP emulation suspend.
5	RSV	Reserved. Read returns "0".
4	VPIFSRC	Video Port Emulation Suspend Source. 0 = ARM emulation suspend. 1 = DSP emulation suspend.
3:0	RESERVED	Reserved. Read returns "0".

Copyright © 2007–2012, Texas Instruments Incorporated

4.8 Debugging Considerations

4.8.1 Pullup/Pulldown Resistors

Proper board design should ensure that input pins to the TMS320DM646x DMSoC device always be at a valid logic level and not floating. This may be achieved via pullup/pulldown resistors. The TMS320DM646x DMSoC features internal pullup (IPU) and internal pulldown (IPD) resistors on most pins to eliminate the need, unless otherwise noted, for external pullup/pulldown resistors.

An external pullup/pulldown resistor needs to be used in the following situations:

- *Boot and Configuration Pins*: If the pin is both routed out and 3-stated (not driven), an external pullup/pulldown resistor is ***strongly recommended***, even if the IPU/IPD matches the desired value/state.
- *Other Input Pins*: If the IPU/IPD *does not* match the desired value/state, use an external pullup/pulldown resistor to pull the signal to the opposite rail.

For the boot and configuration pins (listed in Table 3-5, *Boot Terminal Functions*), if they are both routed out and 3-stated (not driven), it is ***strongly recommended*** that an external pullup/pulldown resistor be implemented. Although, internal pullup/pulldown resistors exist on these pins and they may match the desired configuration value, providing external connectivity can help ensure that valid logic levels are latched on these device boot and configuration pins. In addition, applying external pullup/pulldown resistors on the boot and configuration pins adds convenience to the user in debugging and flexibility in switching operating modes.

Tips for choosing an external pullup/pulldown resistor:

- Consider the total amount of current that may pass through the pullup or pulldown resistor. Make sure to include the leakage currents of all the devices connected to the net, as well as any internal pullup or pulldown resistors.
- Decide a target value for the net. For a pulldown resistor, this should be below the lowest V_{IL} level of all inputs connected to the net. For a pullup resistor, this should be above the highest V_{IH} level of all inputs on the net. A reasonable choice would be to target the V_{OL} or V_{OH} levels for the logic family of the limiting device; which, by definition, have margin to the V_{IL} and V_{IH} levels.
- Select a pullup/pulldown resistor with the largest possible value; but, which can still ensure that the net will reach the target pulled value when maximum current from all devices on the net is flowing through the resistor. The current to be considered includes leakage current plus, any other internal and external pullup/pulldown resistors on the net.
- For bidirectional nets, there is an additional consideration which sets a lower limit on the resistance value of the external resistor. Verify that the resistance is small enough that the weakest output buffer can drive the net to the opposite logic level (including margin).
- Remember to include tolerances when selecting the resistor value.
- For pullup resistors, also remember to include tolerances on the DV_{DD} rail.

For most systems, a 1-kΩ resistor can be used to oppose the IPU/IPD while meeting the above criteria. Users should confirm this resistor value is correct for their specific application.

For most systems, a 20-kΩ resistor can be used to compliment the IPU/IPD on the boot and configuration pins while meeting the above criteria. Users should confirm this resistor value is correct for their specific application.

For most systems, a 20-kΩ resistor can also be used as an external PU/PD on the pins that have IPUs/IPDs disabled and require an external PU/PD resistor while still meeting the above criteria. Users should confirm this resistor value is correct for their specific application.

For more detailed information on input current (I_I), and the low-/high-level input voltages (V_{IL} and V_{IH}) for the DM6467 DMSoC, see Section 6.3, *Electrical Characteristics Over Recommended Ranges of Supply Voltage and Operating Temperature*.

Copyright © 2007–2012, Texas Instruments Incorporated

For the internal pullup/pulldown resistors for all device pins, see the peripheral/system-specific terminal functions table.

Copyright © 2007–2012, Texas Instruments Incorporated

5 System Interconnect

On the DM6467 device, the C64x+ megamodule, the ARM subsystem, the EDMA3 transfer controllers, and the system peripherals are interconnected through a switch fabric architecture. The switch fabric is composed of multiple switched central resources (SCRs) and multiple bridges.

For more detailed information on the DMSoC System Interconnect Architecture, including the device-specific SCRs, bridges, and the system connection matrix, see the *TMS320DM6467 SoC Architecture and Throughput Overview* Application Report (literature number SPRAAW4).

Copyright © 2007–2012, Texas Instruments Incorporated

6 Device Operating Conditions

6.1 Absolute Maximum Ratings Over Operating Case Temperature Range (Unless Otherwise Noted)(1)

Supply voltage ranges:	Core (CV_{DD}, DEV_CV_{DD}, AUX_CV_{DD})(2)		–0.5 V to 1.5 V
	I/O, 3.3V (DV_{DD33}, USB_V_{DDA3P3})(2)		–0.3 V to 3.8 V
	I/O, 1.8V (DV_{DDR2}, $PLL1V_{DD18}$, $PLL2V_{DD18}$, DEV_DV_{DD18}, AUX_DV_{DD18}, USB_V_{DD1P8})(2)		–0.3 V to 2.6 V
Input and Output voltage ranges:	V I/O, 3.3-V pins (except PCI-capable pins)		–0.3 V to 3.8 V –0.3 V to DV_{DD33} + 0.3 V
	V I/O, 3.3-V pins PCI-capable pins		–0.5 V to 4.2 V –0.5 V to DV_{DD33} + 0.5 V
	V I/O, 1.8 V		–0.3 V to 2.6 V –0.3 V to DV_{DD18} + 0.3 V
Operating case temperature ranges, T_c:	(default) [-594, -729]		0°C to 85°C
	(A version) Extended Temperature [-594A, -594AV *only*]		-40°C to 105°C
	(D version) Industrial Temperature [-729D *only*]		-40°C to 85°C
Storage temperature range, T_{stg}	(default)		–55°C to 150°C
Electrostatic Discharge (ESD) Performance:	ESD-HBM (Human Body Model)(3)		± 2000 V
	ESD-CDM (Charged-Device Model) DDR2 Pins(4)	(Silicon Revision 1.1 and 1.0)	± 150 V
		(Silicon Revision 3.0)	± 500 V
	ESD-CDM (Charged-Device Model) – all pins except DDR2 pins(4)		± 500 V

(1) Stresses beyond those listed under "absolute maximum ratings" may cause permanent damage to the device. These are stress ratings only, and functional operation of the device at these or any other conditions beyond those indicated under "recommended operating conditions" is not implied. Exposure to absolute-maximum-rated conditions for extended periods may affect device reliability.
(2) All voltage values are with respect to V_{SS}.
(3) Based on JEDEC JESD22-A114E (*Electrostatic Discharge (ESD) Sensitivity Testing Human Body Model (HBM)*).
(4) Based on JEDEC JESD22-C101C (*Field-Induced Charged-Device Model Test Method for Electrostatic-Discharge-Withstand Thresholds of Microelectronic Components*).

Copyright © 2007–2012, Texas Instruments Incorporated

6.2 Recommended Operating Conditions

			MIN	NOM	MAX	UNIT
CV_{DD}	Supply voltage, Core (CV_{DD}, DEV_CV_{DD}, AUX_CV_{DD}) (1)	NORM	1.14	1.2	1.26	V
		SmartReflex [-594V, -594AV *only*] [see Table 4-39]	1.14	1.2	1.26	V
			1.00	1.05	1.1	V
DV_{DD}	Supply voltage, I/O, 3.3V (DV_{DD33}, USB_V_{DDA3P3})		3.14	3.3	3.46	V
	Supply voltage, I/O, 1.8V (DV_{DDR2}, PLL1V_{DD18}, PLL2V_{DD18}, DEV_DV_{DD18}, AUX_DV_{DD18}, USB_V_{DD1P8} (2))		1.71	1.8	1.89	V
V_{SS}	Supply ground (V_{SS}, PLL1V_{SS}, PLL2V_{SS}, DEV_V_{SS} (3), AUX_V_{SS} (3), USB_V_{SSREF})		0	0	0	V
DDR_VREF	DDR2 reference voltage (4)		0.49DV_{DDR2}	0.5DV_{DDR2}	0.51DV_{DDR2}	V
DDR_ZP	DDR2 impedance control, connected via 50-Ω (±5% tolerance) resistor to V_{SS}			V_{SS}		V
DDR_ZN	DDR2 impedance control, connected via 50-Ω (±5% tolerance) resistor to DV_{DDR2}			DV_{DDR2}		V
V_{IH}	High-level input voltage, 3.3 V (except JTAG[TCK], PCI-capable, and I2C pins)		2			V
	High-level input voltage, JTAG [TCK]		2.5			V
	High-level input voltage, PCI		0.5DV_{DD33}			V
	High-level input voltage, I2C		0.7DV_{DD33}			V
	High-level input voltage, non-DDR I/O, 1.8 V		0.65DV_{DD18}			V
V_{IL}	Low-level input voltage, 3.3 V (except PCI-capable and I2C pins)				0.8	V
	Low-level input voltage, PCI				0.3DV_{DD33}	V
	Low-level input voltage, I2C		0		0.3DV_{DD33}	V
	Low-level input voltage, non-DDR I/O, 1.8 V				0.35DV_{DD18}	V
T_c	Operating case temperature	Default	0		85	°C
		(A version)	-40		105	
		(D version)	-40		85	
$F_{SYSCLK1}$	DSP Operating Frequency (SYSCLK1)	-594	20		594	MHz
		-729	20		729	MHz

(1) Future variants of TI SoC devices may operate at voltages ranging from 0.9 V to 1.4 V to provide a range of system power/performance options. TI highly recommends that users design-in a supply that can handle multiple voltages within this range (i.e., 1.0 V, 1.05 V, 1.1 V, 1.14 V, 1.2 V, 1.26 V with ± 3% tolerances) by implementing simple board changes such as reference resistor values or input pin configuration modifications. Not incorporating a flexible supply may limit the system's ability to easily adapt to future versions of TI SoC devices.
(2) Oscillator 1.8 V power supply (DEV_DV_{DD18}) can be connected to the same 1.8 V power supply as DV_{DDR2}.
(3) Oscillator ground (DEV_V_{SS} and AUX_V_{SS}) must be kept separate from other grounds and connected directly to the crystal load capacitor ground.
(4) DDR_VREF is expected to equal 0.5DV_{DDR2} of the transmitting device and to track variations in the DV_{DDR2}.

Copyright © 2007–2012, Texas Instruments Incorporated

6.3 Electrical Characteristics Over Recommended Ranges of Supply Voltage and Operating Temperature (Unless Otherwise Noted)

PARAMETER		TEST CONDITIONS (1)	MIN	TYP	MAX	UNIT
V_{OH}	Low/full speed: USB_DN and USB_DP		2.8		USB_V_{DDA3P3}	V
	High speed: USB_DN and USB_DP		360		440	mV
	High-level output voltage (3.3V I/O except PCI-capable and I2C pins)	DV_{DD33} = MIN, I_{OH} = MAX	2.4			V
	High-level output voltage (3.3V I/O PCI-capable pins)	I_{OH} = –0.5 mA, DV_{DD33} = 3.3 V	0.9DV_{DD33} (2)			V
V_{OL}	Low/full speed: USB_DN and USB_DP		0.0		0.3	V
	High speed: USB_DN and USB_DP		–10		10	mV
	Low-level output voltage (3.3V I/O except PCI-capable and I2C pins)	DV_{DD33} = MIN, I_{OL} = MAX			0.4	V
	Low-level output voltage (3.3V I/O PCI-capable pins)	I_{OL} = 1.5 mA, DV_{DD33} = 3.3 V			0.1DV_{DD33} (2)	V
	Low-level output voltage (3.3V I/O I2C pins)	I_O = 3 mA	0		0.4	V
V_{LDO}	USB_$V_{DDA1P2LDO}$ output voltage		1.14	1.2	1.26	V
I_I (3)	Input current [DC] (except I2C and PCI-capable pins)	V_I = V_{SS} to DV_{DD33} without opposing internal resistor			±20	µA
		V_I = V_{SS} to DV_{DD33} with opposing internal pullup resistor (4)	50	100	250	µA
		V_I = V_{SS} to DV_{DD33} with opposing internal pulldown resistor (4)	–250	–100	–50	µA
	Input current [DC] (I2C)	V_I = V_{SS} to DV_{DD33}			±20	µA
	Input current (PCI-capable pins) [DC]	0 < V_I < DV_{DD33} = 3.3 V without opposing internal resistor			±50	µA
		0 < V_I < DV_{DD33} = 3.3 V with opposing internal pullup resistor (4)	50		250	µA
		0 < V_I < DV_{DD33} = 3.3 V with opposing internal pulldown resistor (4)	–250		–50	µA
I_{OH}	High-level output current [DC]	GMTCLK, MTXD[7:0], MTXEN			–8	mA
		DDR2; V_{OH} = DV_{DDR2} – 0.4 V			–8	mA
		PCI-capable pins (PCI pin function *only*)			–0.5 (2)	mA
		All other peripherals			–4	mA
I_{OL}	Low-level output current [DC]	GMTCLK, MTXD[7:0], MTXEN			8	mA
		DDR2; V_{OL} = 0.4 V			8	mA
		PCI-capable pins (PCI pin function *only*)			1.5 (2)	mA
		All other peripherals			4	mA
I_{OZ} (5)	I/O Off-state output current	V_O = DV_{DD33} or V_{SS}; internal pull disabled			±20	µA
		V_O = DV_{DD33} or V_{SS}; internal pull enabled		±100		µA

(1) For test conditions shown as MIN, MAX, or TYP, use the appropriate value specified in the recommended operating conditions table.
(2) These rated numbers are from the *PCI Local Bus Specification Revision 2.3*. The DC specifications and AC specifications are defined in Table 4-3 (DC Specifications for 3.3V Signaling) and Table 4-4 (AC Specifications for 3.3V Signaling), respectively.
(3) I_I applies to input-only pins and bi-directional pins. For input-only pins, I_I indicates the input leakage current. For bi-directional pins, I_I indicates the input leakage current and off-state (Hi-Z) output leakage current.
(4) Applies only to pins with an internal pullup (IPU) or pulldown (IPD) resistor.
(5) I_{OZ} applies to output-only pins, indicating off-state (Hi-Z) output leakage current.

Copyright © 2007–2012, Texas Instruments Incorporated

Electrical Characteristics Over Recommended Ranges of Supply Voltage and Operating Temperature (Unless Otherwise Noted) *(continued)*

PARAMETER		TEST CONDITIONS (1)	MIN	TYP	MAX	UNIT
I_{CDD}	Core (CV_{DD}, DEV_CV_{DD}, AUX_CV_{DD}) supply current(6)	CV_{DD} = 1.2 V, DSP clock = 594 MHz ARM Clock = 297 MHz, DDR Clock = 297 MHz		1318.58		mA
		CV_{DD} = 1.05 V, DSP clock = 594 MHz ARM Clock = 297 MHz, DDR Clock = 297 MHz (SmartReflex V parts)		814.00		mA
		CV_{DD} = 1.2 V, DSP clock = 594 MHz ARM Clock = 297 MHz, DDR Clock = 297 MHz (SmartReflex V parts)		915.39		mA
		CV_{DD} = 1.2 V, DSP clock = 729 MHz ARM Clock = 364.5 MHz, DDR Clock = 310.5 MHz		1622.09		mA
I_{DDD}	3.3V I/O (DV_{DD33}, USB_V_{DDA3P3}) supply current(6)	DV_{DD} = 3.3 V, DSP clock = 594 MHz ARM Clock = 297 MHz, DDR Clock = 297 MHz		25.32		mA
		DV_{DD} = 3.3 V, DSP clock = 729 MHz ARM Clock = 364.5 MHz, DDR Clock = 310.5 MHz		26.17		mA
I_{DDD}	1.8V I/O (DV_{DDR2}, $PLL1V_{PRW18}$, $PLL2V_{PRW18}$, DEV_DV_{DD18}, AUX_DV_{DD18}, USB_V_{DD1P8}) supply current(6)	DV_{DD} = 1.8 V, DSP clock = 594 MHz ARM Clock = 297 MHz, DDR Clock = 297 MHz		255.15		mA
		DV_{DD} = 1.8 V, DSP clock = 729 MHz ARM Clock = 364.5 MHz, DDR Clock = 310.5 MHz		260.42		mA
C_i	Input capacitance				4	pF
C_o	Output capacitance				4	pF

(6) Measured under the following conditions: 60% DSP CPU utilization; ARM doing typical activity (peripheral configurations, other housekeeping activities); DDR2 Memory Controller at 50% utilization, 50% writes, 32 bits, 50% bit switching at room temperature (25 °C). The actual current draw varies across manufacturing processes and is highly application-dependent. For more details on core and I/O activity, as well as information relevant to board power supply design, see the *TMS320DM646x Power Consumption Summary* Application Report (literature number SPRAAS2).

7 Peripheral Information and Electrical Specifications

7.1 Parameter Information

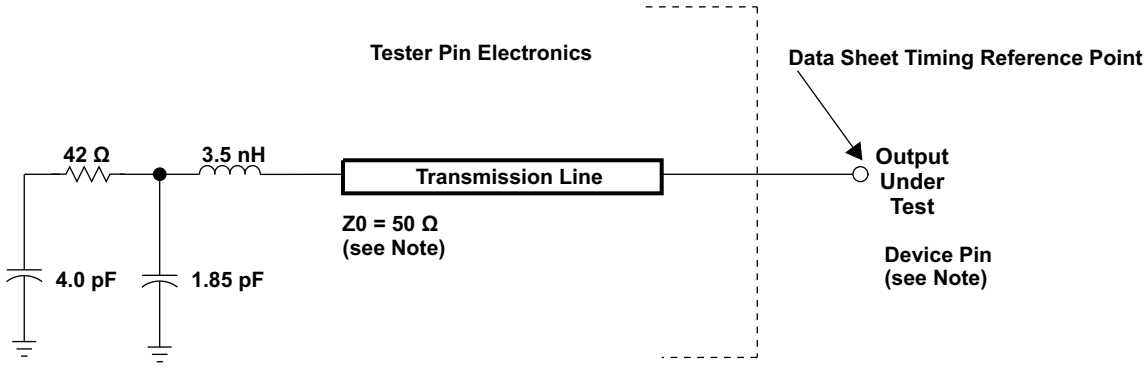

NOTE: The data sheet provides timing at the device pin. For output timing analysis, the tester pin electronics and its transmission line effects must be taken into account. A transmission line with a delay of 2 ns can be used to produce the desired transmission line effect. The transmission line is intended as a load only. It is not necessary to add or subtract the transmission line delay (2 ns) from the data sheet timings.

Input requirements in this data sheet are tested with an input slew rate of < 4 Volts per nanosecond (4 V/ns) at the device pin.

Figure 7-1. Test Load Circuit for AC Timing Measurements

The load capacitance value stated is only for characterization and measurement of AC timing signals. This load capacitance value does not indicate the maximum load the device is capable of driving.

Copyright © 2007–2012, Texas Instruments Incorporated

7.1.1 1..8-V and 3.3-V Signal Transition Levels

All input and output timing parameters are referenced to V_{ref} for both "0" and "1" logic levels. For 3.3-V I/O, V_{ref} = 1.5 V. For 1.8-V I/O, V_{ref} = 0.9 V.

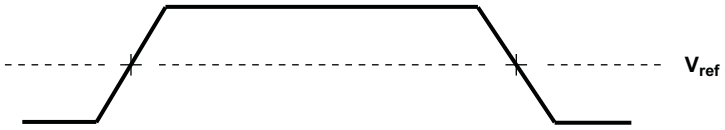

Figure 7-2. Input and Output Voltage Reference Levels for AC Timing Measurements

All rise and fall transition timing parameters are referenced to V_{IL} MAX and V_{IH} MIN for input clocks, V_{OL} MAX and V_{OH} MIN for output clocks.

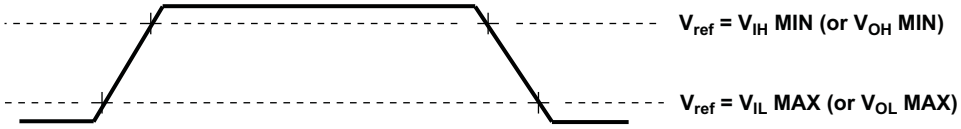

Figure 7-3. Rise and Fall Transition Time Voltage Reference Levels

7.1.2 3.3-V Signal Transition Rates

All timings are tested with an input edge rate of 4 volts per nanosecond (4 V/ns).

7.1.3 Timing Parameters and Board Routing Analysis

The timing parameter values specified in this data manual do *not* include delays by board routings. As a good board design practice, such delays must *always* be taken into account. Timing values may be adjusted by increasing/decreasing such delays. TI recommends utilizing the available I/O buffer information specification (IBIS) models to analyze the timing characteristics correctly. To properly use IBIS models to attain accurate timing analysis for a given system, see the *Using IBIS Models for Timing Analysis* application report (literature number SPRA839). If needed, external logic hardware such as buffers may be used to compensate any timing differences.

For the DDR2 memory controller interface, it is *not* necessary to use the IBIS models to analyze timing characteristics. Section 7.10.2, *DDR2 Interface*, provides a PCB routing rules solution that describes the routing rules to ensure the DDR2 memory controller interface timings are met.

7.2 Recommended Clock and Control Signal Transition Behavior

All clocks and control signals ***must*** transition between V_{IH} and V_{IL} (or between V_{IL} and V_{IH}) in a monotonic manner.

Copyright © 2007–2012, Texas Instruments Incorporated

7.3 Power Supplies

For more information regarding TI's power management products and suggested devices to power TI DSPs, visit www.ti.com/processorpower.

7.3.1 Power-Supply Sequencing

The DM6467 includes one core supply (CV_{DD}), and two I/O supplies—DV_{DD33} and DV_{DDR2}. To ensure proper device operation, a specific power-up sequence ***must*** be followed. Some TI power-supply devices include features that facilitate power sequencing—for example, Auto-Track and Slow-Start/Enable features. For more information on TI power supplies and their features, visit www.ti.com/processorpower.

Here is a summary of the power sequencing requirements:

- The power ramp order **must** be CV_{DD} before DV_{DDR2}, and DV_{DDR2} before DV_{DD33}—meaning during power up, the voltage at the DV_{DDR2} rail should never exceed the voltage at the CV_{DD} rail. Similarly, the voltage at the DV_{DDD33} rail should never exceed the voltage at the DV_{DDR2} rail.
- From the time that power ramp begins, all power supplies (CV_{DD}, DV_{DDR2}, DV_{DD33}) **must** be stable within 200 ms. The term "stable" means reaching the recommended operating condition (see Section 6.2, *Recommended Operating Conditions* table).

7.3.2 Power-Supply Design Considerations

Core and I/O supply voltage regulators should be located close to the DSP (or DSP array) to minimize inductance and resistance in the power delivery path. Additionally, when designing for high-performance applications utilizing the DM6467 device, the PC board should include separate power planes for core, I/O, and ground; all bypassed with high-quality low-ESL/ESR capacitors.

7.3.3 Power-Supply Decoupling

In order to properly decouple the supply planes from system noise, place as many capacitors (caps) as possible close to the DM6467. These caps need to be close to the DM6467 power pins, no more than 1.25 cm maximum distance to be effective. Physically smaller caps, such as 0402, are better but need to be evaluated from a yield/manufacturing point-of-view. Parasitic inductance limits the effectiveness of the decoupling capacitors, therefore physically smaller capacitors should be used while maintaining the largest available capacitance value.

Larger caps for each supply can be placed further away for bulk decoupling. Large bulk caps (on the order of 100 µF) should be furthest away, but still as close as possible. Large caps for each supply should be placed outside of the BGA footprint.

As with the selection of any component, verification of capacitor availability over the product's production lifetime should be considered.

For more details on capacitor usage and placement, see the *Implementing DDR2 PCB Layout on the TMS320DM646x DMSoC* Application Report (literature number SPRAAM1A).

7.3.4 DM6467 Power and Clock Domains

The DM6467 includes one single power domain — the "Always On" power domain. The "Always On" power domain is always on when the chip is on. The "Always On" domain is powered by the CV_{DD} pins of the DM6467. All DM6467 modules lie within the "Always On" power domain. Table 7-1 provides a listing of the DM6467 clock domains.

Two primary reference clocks are required for the DM6467 device. These can either be crystal inputs *or* driven by external oscillators. A 27-MHz crystal is recommended for the system PLLs, which generate the internal clocks for the ARM926, DSP, HDVICPs, peripherals, and the EDMA3. A 24- or 48-MHz crystal is also required if the USB (24-MHz only) or UART (either 24- or 48-MHz) peripherals are to be used. In addition, the 24- or 48-MHz input clock can be used to source the McASPs' clocks. For further description of the DM6467 clock domains, see Table 7-2 and Figure 7-4.

Copyright © 2007–2012, Texas Instruments Incorporated

The DM6467 architecture is divided into the power and clock domains shown in Table 7-1. Table 7-2 further discusses the clock domains and their ratios. Figure 7-4 shows the Clock Domain Block Diagram.

Table 7-1. DM6467 Power and Clock Domains

POWER DOMAIN	CLOCK DOMAIN	PERIPHERAL/MODULE
Always On	SYSCLK3	UART0
Always On	SYSCLK3	UART1
Always On	SYSCLK3	UART2
Always On	SYSCLK3	I2C
Always On	SYSCLK3	Timer0
Always On	SYSCLK3	Timer1
Always On	SYSCLK3	Timer2
Always On	SYSCLK3	PWM0
Always On	SYSCLK3	PWM1
Always On	SYSCLK2	DDR2
Always On	SYSCLK2	VPIF
Always On	SYSCLK2	TSIF0
Always On	SYSCLK2	TSIF1
Always On	SYSCLK2	VDCE
Always On	SYSCLK2	HDVICP0
Always On	SYSCLK2	HDVICP1
Always On	SYSCLK2	EDMA3
Always On	SYSCLK2	PCI
Always On	SYSCLK2	SCR
Always On	SYSCLK3	GPSC
Always On	SYSCLK3	LPSCs
Always On	SYSCLK3	PLLC1
Always On	SYSCLK3	PLLC2
Always On	SYSCLK3	Ice Pick
Always On	SYSCLK3	EMIFA
Always On	SYSCLK3	USB
Always On	SYSCLK3	HPI
Always On	SYSCLK3	VLYNQ
Always On	SYSCLK3	EMAC/MDIO
Always On	SYSCLK3	SPI
Always On	SYSCLK3	McASP0
Always On	SYSCLK3	McASP1
Always On	SYSCLK3	CRGEN0
Always On	SYSCLK3	CRGEN1
Always On	SYSCLK4	ATA
Always On	SYSCLK3	GPIO
Always On	SYSCLK1	C64x+ CPU
Always On	SYSCLK2	ARM926

Copyright © 2007–2012, Texas Instruments Incorporated

Table 7-2. DM6467 Clock Domains

SUBSYSTEM	CLOCK DOMAIN	DOMAIN CLOCK SOURCE	FIXED RATIO vs. SYSCLK1 FREQUENCY	CLOCK MODES FREQUENCY (MHz)		
				BYPASS MODE	PLL MODE (-594)(1)	PLL MODE (-729)(2)
DSP Subsystem	PLLDIV1	PLLC1 SYSCLK1	1:1	27 MHz	594 MHz	729 MHz
ARM926 Subsystem, EDMA3, HDVICP, PCI, VDCE, VPIF, TSIFs, DDR2 Mem Ctlr	PLLDIV2	PLLC1 SYSCLK2	1:2	13.5 MHz	297 MHz	364.5 MHz
Peripherals (GPIO, Timers, I2C, PWMs, HPI, EMAC, EMIFA, VLYNQ, SPI, ARM INTC, USB2.0, UARTs, McASPs, CRGENs, SYSTEM)	PLLDIV3	PLLC1 SYSCLK3	1:4	6.75 MHz	148.5 MHz	182.25 MHz
ATA	PLLDIV4	PLLC1 SYSCLK4	1:6 (-594) [default](3) 1:7 (-729)(3)	4.5 MHz	99 MHz	104.14 MHz
TSIF0(4)	PLLDIV5	PLLC1 SYSCLK5	1:8 (-594) [default](3) 1:10 (-729)(3)	3.38 MHz	74.25 MHz	72.9 MHz
TSIF1(4)	PLLDIV6	PLLC1 SYSCLK6	1:8 (-594) [default](3) 1:10 (-729)(3)	3.38 MHz	74.25 MHz	72.9 MHz
VPIF(4)	PLLDIV8	PLLC1 SYSCLK8	1:6 (-594) [default](3) 1:7 (-729)(3)	3.38 MHz	99 MHz	104.14 MHz(5)
VLYNQ	PLLDIV9	PLLC1 SYSCLK9	1:6 (-594) [default](3) 1:7 (-729)(3)	4.5 MHz	99 MHz	104.14 MHz
DDR2 PHY	PLLDIV1	PLLC2 SYSCLK1	1:1	27 MHz	594 MHz	621 MHz

(1) These table values assume a DEV_MXI/DEV_CLKIN of 27 MHz and a PLL1 multiplier equal to 22.
(2) These table values assume a DEV_MXI/DEV_CLKIN of 27 MHz and a PLL1 multiplier equal to 27.
(3) The default SYSCLKx ratios apply to the -594 MHz device ***only***. For the -729 MHz device to achieve the quoted frequencines, the PLLC1 SYSCLKx (for SYSCLK4, SYSCLK5, SYSCLK6, SYSCLK8, SYSCLK9) default divider values ***must*** be changed. For the steps to change the PLLC1 SYSCLKx divider values, see the*TMS320DM646x DMSoC ARM Subsystem* Reference Guide (literature number SPRUEP9).
(4) These domain clock sources, along with VP_CLKIN[3:0], STC_CLKIN, CRG0_VCXI, and CRG1_VCXI clock signals, go through the clock select logic to determine the clock source enabled as the input to the VPIF and TSIF peripherals.
(5) For the -729 device, use an external clock source for the 54-/74.25-/108-MHz VPIF clock.

Copyright © 2007–2012, Texas Instruments Incorporated

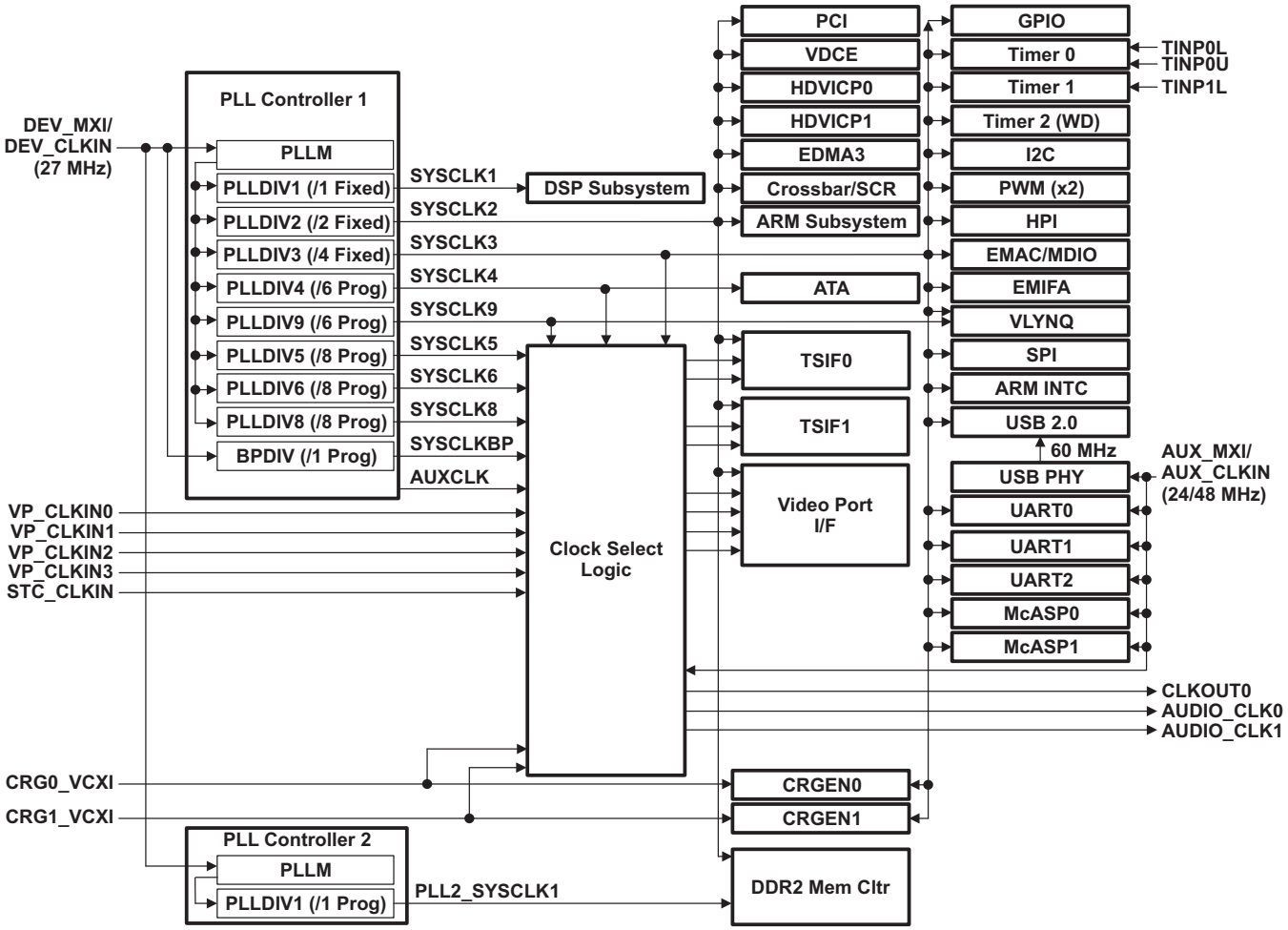

Figure 7-4. PLL1 and PLL2 Clock Domain Block Diagram

For further detail on PLL1 and PLL2, see the structure block diagrams shown in Figure 7-5 and Figure 7-6, respectively.

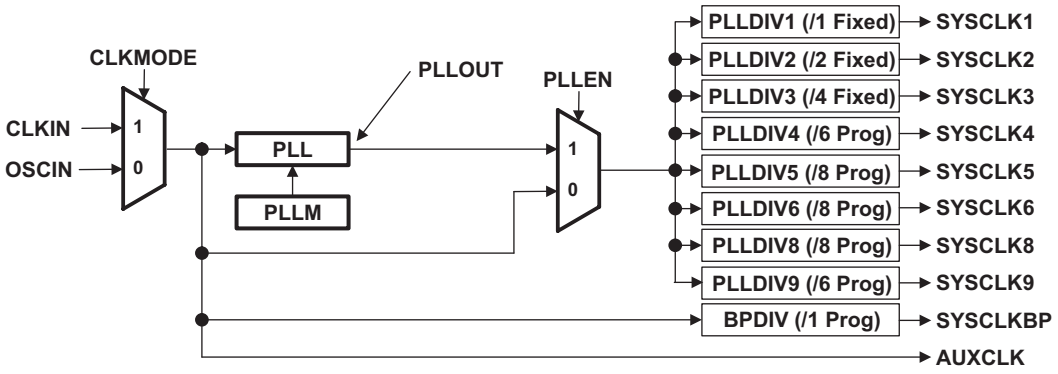

Figure 7-5. PLL1 Structure Block Diagram

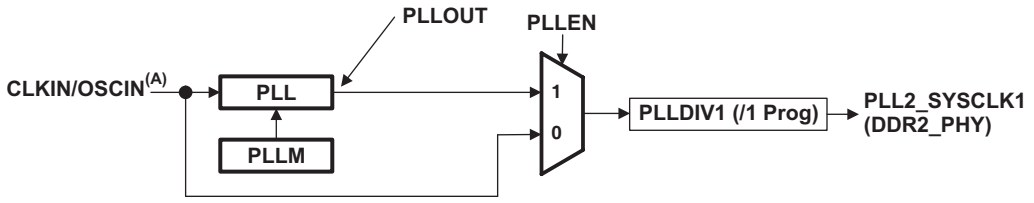

(A) As selected by the PLL2 PLLCTL register

Figure 7-6. PLL2 Structure Block Diagram

7.3.5 Power and Sleep Controller (PSC)

The Power and Sleep Controller (PSC) controls device power by gating off clocks to individual peripherals/modules. The PSC consists of a Global PSC (GPSC) and a set of Local PSCs (LPSCs). The GPSC contains memory mapped registers, PSC interrupt control, and a state machine for each peripheral/module. An LPSC is associated with each peripheral/module and provides clock and reset control. The GPSC controls all of the DM6467's LPSCs. The ARM Subsystem does not have an LPSC module. ARM sleep mode is accomplished through the wait for interrupt instruction. The LPSCs for DM6467 are shown in Table 7-3. The PSC Register memory map is given in Table 7-4. For more details on the PSC, see the *TMS320DM646x DMSoC ARM Subsystem* Reference Guide (literature number SPRUEP9).

Table 7-3. DM6467 LPSC Assignments

LPSC NUMBER	PERIPHERAL/MODULE	LPSC NUMBER	PERIPHERAL/MODULE	LPSC NUMBER	PERIPHERAL/MODULE
0	Reserved	16	Video Port	32	SPI
1	C64x+ CPU	17	Video Port	33	GPIO
2	HDVICP0	18	TSIF0	34	TIMER0
3	HDVICP1	19	TSIF1	35	TIMER1
4	EDMA CC	20	DDR2 Memory Controller	36	Reserved
5	EDMA TC0	21	EMIFA	37	Reserved
6	EDMA TC1	22	McASP0	38	Reserved
7	EDMA TC2	23	McASP1	39	Reserved
8	EDMA TC3	24	CRGEN0	40	Reserved
9	USB2.0	25	CRGEN1	41	Reserved
10	ATA	26	UART0	42	Reserved
11	VLYNQ	27	UART1	43	Reserved
12	HPI	28	UART2	44	Reserved
13	PCI	29	PWM0	45	ARM INTC
14	EMAC/MDIO	30	PWM1		
15	VDCE	31	I2C		

Copyright © 2007–2012, Texas Instruments Incorporated

Table 7-4. PSC Registers

HEX ADDRESS RANGE	REGISTER ACRONYM	DESCRIPTION
0x01C4 1000	PID	Peripheral Revision and Class Information Register
0x01C4 1004 - 0x01C4 1017	–	Reserved
0x01C4 1018	INTEVAL	Interrupt Evaluation Register
0x01C4 101C - 0x01C4 1039	–	Reserved
0x01C4 1040	MERRPR0	Module Error Pending 0 (mod 0- 31) Register
0x01C4 1044	MERRPR1	Module Error Pending 1 (mod 32- 63) Register
0x01C4 1048 - 0x01C4 1049	–	Reserved
0x01C4 1050	MERRCR0	Module Error Clear 0 (mod 0 - 31) Register
0x01C4 1054	MERRCR1	Module Error Clear 1 (mod 32 - 63) Register
0x01C4 1058 - 0x01C4 111F		Reserved
0x01C4 1120	PTCMD	Power Domain Transition Command Register
0x01C4 1124 - 0x01C4 1127	–	Reserved
0x01C4 1128	PTSTAT	Power Domain Transition Status Register
0x01C4 112C - 0x01C4 11FF	–	Reserved
0x01C4 1200	PDSTAT0	Power Domain Status 0 Register (Always On)
0x01C4 1204 - 0x01C4 12FF	–	Reserved
0x01C4 1300	PDCTL0	Power Domain Control 0 Register (Always On)
0x01C4 1304 - 0x01C4 17FF	–	Reserved
0x01C4 1800 - 0x01C4 1803	–	Reserved
0x01C4 1804	MDSTAT1	Module Status 1 Register (C64x+ CPU)
0x01C4 1808	MDSTAT2	Module Status 2 Register (HDVICP0)
0x01C4 180C	MDSTAT3	Module Status 3 Register (HDVICP1)
0x01C4 1810	MDSTAT4	Module Status 4 Register (EDMA CC)
0x01C4 1814	MDSTAT5	Module Status 5 Register (EDMA TC0)
0x01C4 1818	MDSTAT6	Module Status 6 Register (EDMA TC1)
0x01C4 181C	MDSTAT7	Module Status 7 Register (EDMA TC2)
0x01C4 1820	MDSTAT8	Module Status 8 Register (EDMA TC3)
0x01C4 1824	MDSTAT9	Module Status 9 Register (USB)
0x01C4 1828	MDSTAT10	Module Status 10 Register (ATA)
0x01C4 182C	MDSTAT11	Module Status 11 Register (VLYNQ)
0x01C4 1830	MDSTAT12	Module Status 12 Register (HPI)
0x01C4 1834	MDSTAT13	Module Status 13 Register (PCI)
0x01C4 1838	MDSTAT14	Module Status 14 Register (EMAC)
0x01C4 183C	MDSTAT15	Module Status 15 Register (VDCE)
0x01C4 1840	MDSTAT16	Module Status 16 Register (Vdieo Port)
0x01C4 1844	MDSTAT17	Module Status 17 Register (Video Port)
0x01C4 1848	MDSTAT18	Module Status 18 Register (TSIF0)
0x01C4 184C	MDSTAT19	Module Status 19 Register (TSIF1)
0x01C4 1850	MDSTAT20	Module Status 20 Register (DDR2 Mem Ctlr)
0x01C4 1854	MDSTAT21	Module Status 21 Register (EMIFA)
0x01C4 1858	MDSTAT22	Module Status 22 Register (McASP0)
0x01C4 185C	MDSTAT23	Module Status 23 Register (McASP1)
0x01C4 1860	MDSTAT24	Module Status 24 Register (CRGEN0)
0x01C4 1864	MDSTAT25	Module Status 25 Register (CRGEN1)
0x01C4 1868	MDSTAT26	Module Status 26 Register (UART0)
0x01C4 186C	MDSTAT27	Module Status 27 Register (UART1)
0x01C4 1870	MDSTAT28	Module Status 28 Register (UART2)

Copyright © 2007–2012, Texas Instruments Incorporated

Table 7-4. PSC Registers (continued)

HEX ADDRESS RANGE	REGISTER ACRONYM	DESCRIPTION
0x01C4 1874	MDSTAT29	Module Status 29 Register (PWM0)
0x01C4 1878	MDSTAT30	Module Status 30 Register (PWM1)
0x01C4 187C	MDSTAT31	Module Status 31 Register (I2C)
0x01C4 1880	MDSTAT32	Module Status 32 Register (SPI)
0x01C4 1884	MDSTAT33	Module Status 33 Register (GPIO)
0x01C4 1888	MDSTAT34	Module Status 34 Register (TIMER0)
0x01C4 188C	MDSTAT35	Module Status 35 Register (TIMER1)
0x01C4 1890 - 0x01C4 18B3	–	Reserved
0x01C4 18B4	MDSTAT45	Module Status 45 Register (ARM INTC)
0x01C4 18B8 - 0x01C4 19FF	–	Reserved
0x01C4 1A00 - 0x01C4 1A03	–	Reserved
0x01C4 1A04	MDCTL1	Module Control 1 Register (C64x+ CPU)
0x01C4 1A08	MDCTL2	Module Control 2 Register (HDVICP0)
0x01C4 1A0C	MDCTL3	Module Control 3 Register (HDVICP1)
0x01C4 1A10	MDCTL4	Module Control 4 Register (EDMA CC)
0x01C4 1A14	MDCTL5	Module Control 5 Register (EDMA TC0)
0x01C4 1A18	MDCTL6	Module Control 6 Register (EDMA TC1)
0x01C4 1A1C	MDCTL7	Module Control 7 Register (EDMA TC2)
0x01C4 1A20	MDCTL8	Module Control 8 Register (EDMA TC3)
0x01C4 1A24	MDCTL9	Module Control 9 Register (USB)
0x01C4 1A28	MDCTL10	Module Control 10 Register (ATA)
0x01C4 1A2C	MDCTL11	Module Control 11 Register (VLYNQ)
0x01C4 1A30	MDCTL12	Module Control 12 Register (HPI)
0x01C4 1A34	MDCTL13	Module Control 13 Register (PCI)
0x01C4 1A38	MDCTL14	Module Control 14 Register (EMAC)
0x01C4 1A3C	MDCTL15	Module Control 15 Register (VDCE)
0x01C4 1A40	MDCTL16	Module Control 16 Register (Video Port)
0x01C4 1A44	MDCTL17	Module Control 17 Register (Video Port)
0x01C4 1A48	MDCTL18	Module Control 18 Register (TSIF0)
0x01C4 1A4C	MDCTL19	Module Control 19 Register (TSIF1)
0x01C4 1A50	MDCTL20	Module Control 20 Register (DDR2 Mem Ctlr)
0x01C4 1A54	MDCTL21	Module Control 21 Register (EMIFA)
0x01C4 1A58	MDCTL22	Module Control 22 Register (McASP0)
0x01C4 1A5C	MDCTL23	Module Control 23 Register (McASP1)
0x01C4 1A60	MDCTL24	Module Control 24 Register (CRGEN0)
0x01C4 1A64	MDCTL25	Module Control 25 Register (CRGEN1)
0x01C4 1A68	MDCTL26	Module Control 26 Register (UART0)
0x01C4 1A6C	MDCTL27	Module Control 27 Register (UART1)
0x01C4 1A70	MDCTL28	Module Control 28 Register (UART2)
0x01C4 1A74	MDCTL29	Module Control 29 Register (PWM0)
0x01C4 1A78	MDCTL30	Module Control 30 Register (PWM1)
0x01C4 1A7C	MDCTL31	Module Control 31 Register (I2C)
0x01C4 1A80	MDCTL32	Module Control 32 Register (SPI)
0x01C4 1A84	MDCTL33	Module Control 33 Register (GPIO)
0x01C4 1A88	MDCTL34	Module Control 34 Register (TIMER0)
0x01C4 1A8C	MDCTL35	Module Control 35 Register (TIMER1)
0x01C4 1A90 - 0x01C4 1AB3	–	Reserved

Copyright © 2007–2012, Texas Instruments Incorporated

Table 7-4. PSC Registers (continued)

HEX ADDRESS RANGE	REGISTER ACRONYM	DESCRIPTION
0x01C4 1AB4	MDCTL45	Module Control 45 Register (ARM INTC)
0x01C4 1AB8 - 0x01C4 1FFF	–	Reserved

7.3.6 SmartReflex (Voltage Scaling)

Increasing the device complexity increases its power consumption and with the smaller transistor structures responsible for higher achievable clock rates and increased performance, comes an inevitable penalty, increasing the leakage currents. Leakage currents are present in any active circuit, independently of clock rates and usage scenarios. This static power consumption is mainly determined by transistor type and process technology. Higher clock rates also increase dynamic power, the power used when transistors switch. The dynamic power depends mainly on a specific usage scenario, clock rates, and I/O activity.

Texas Instruments' SmartReflex™ technology is used to decrease both static and dynamic power consumption while maintaining the device performance. SmartReflex in the TMS320DM6467 DMSoC device (-594V parts *only*) is a feature that allows the core voltage to be optimized based on the process corner of the device. This requires an adjustable power supply design with a voltage regulator.

On the DM6467, devices with different strengths are partitioned into two groups: Weak and Strong. "Weak" devices should run at 1.2-V core power supply where as "Strong" devices can run at 1.05-V core to reduce power consumption. During manufacturing test, the device characterization information is stored permanently on the DM6467 device.

On the DM6467 device, the SmartReflex feature is disabled by default. It can be enabled by pulling the configuration pin VADJEN (AB7) high before releasing the device out-of-reset. The VADJEN input value is latched into BOOTCFG register (VADJEN bit) at the rising edge of $\overline{\text{RESET}}$ or $\overline{\text{POR}}$. Once SmartReflex is enabled, the pins GP[7]/CVDDADJ1 (A12) and GP[6]/CVDDADJ0 (E11) function as SmartReflex control outputs to the adjustable core power supply and the GPIO functionality is disabled. For more detailed information on the SmartReflex and GPIO pin muxing, see Section 4.7.3.11, *SmartReflex and GPIO Pin Muxing*.

The read-only SMTREFELX register [bits 1:0] reflects the status of the CVDDADJ[1:0] pins (see Figure 7-7, SMTREFLEX Register [0x01C4 0018]). For additional information on SmartReflex, see the *Enabling SmartReflex on the TMS320DM6467* Application Report (Literature Number SPRAAZ2).

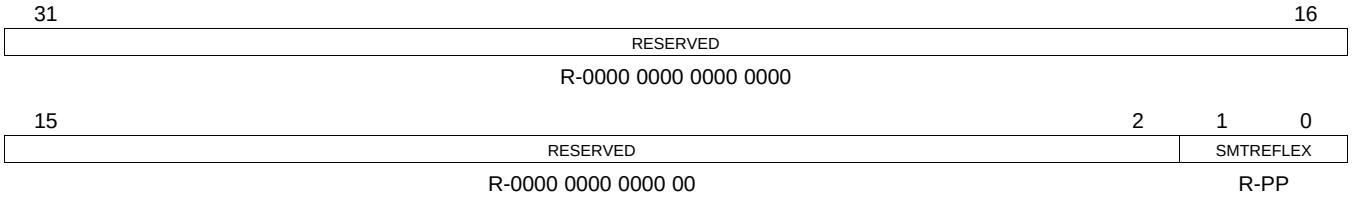

LEGEND: R = Read only; P = Pin value

Figure 7-7. SMTREFLEX Status Register [0x01C4 0018] (Voltage Scale Adjustment (V) Parts *Only*)

Table 7-5. SMTREFLEX Status Register Bit Descriptions

BIT	NAME	DESCRIPTION
31:2	RESERVED	Reserved. Read returns "0".
1:0	SMTREFLEX	When SmartReflex Control Outputs are enabled (VADJEN = 1), these bits reflect the status of the CVDDADJ[1:0] pins. 00 = 1.2 V core supply voltage 11 = 1.05 V core supply voltage For more detailed information on the SmartReflex and GPIO pin muxing, see Section 4.7.3.11, *SmartReflex and GPIO Pin Muxing*.

Copyright © 2007–2012, Texas Instruments Incorporated

7.4 External Clock Input From DEV_MXI/DEV_CLKIN and AUX_MXI/AUX_CLKIN Pins

The DM6467 device includes two options to provide an external clock input for both the system and auxiliary oscillators:

- Use an on-chip oscillator with external crystal (fundamental parallel resonant mode only, no overtone support).
- Use an external 1.8-V LVCMOS-compatible clock input.

The optimal external clock input frequency for the crystals are 27 MHz for the system oscillator (DEV_MXI/DEV_CLKIN) and 24 MHz for the auxiliary oscillator. Section 7.4.1.1 provides more details on Option 1, using an on-chip oscillator with external crystal for the 27-MHz system oscillator. Section 7.4.1.2 provides more details on Option 1, using an on-chip oscillator with external crystal for the 24-MHz auxiliary oscillator. Section 7.4.2.1 provides details on Option 2, using an external 1.8-V LVCMOS-compatible clock input for the 27-MHz system oscillator. Section 7.4.2 provides details on Option 2, using an external 1.8-V LVCMOS-compatible clock input for the 24-MHz auxiliary oscillator.

7.4.1 Clock Input Option 1—Crystal

7.4.1.1 27-MHz for System Oscillator Clock Input Option 1—Crystal

In this option, a crystal is used as the external clock input to the DM6467 system oscillator.

The 27-MHz oscillator provides the reference clock for all DM6467 subsystems and peripherals. The on-chip oscillator requires an external 27-MHz crystal connected across the DEV_MXI and DEV_MXO pins, along with two load capacitors, as shown in Figure 7-8. The external crystal load capacitors ***must*** be connected only to the 27-MHz oscillator ground pin (DEV_V_{SS}). ***Do not*** connect to board ground (V_{SS}). The DEV_DV_{DD18} pin can be connected to the same 1.8 V power supply as DV_{DDR2}.

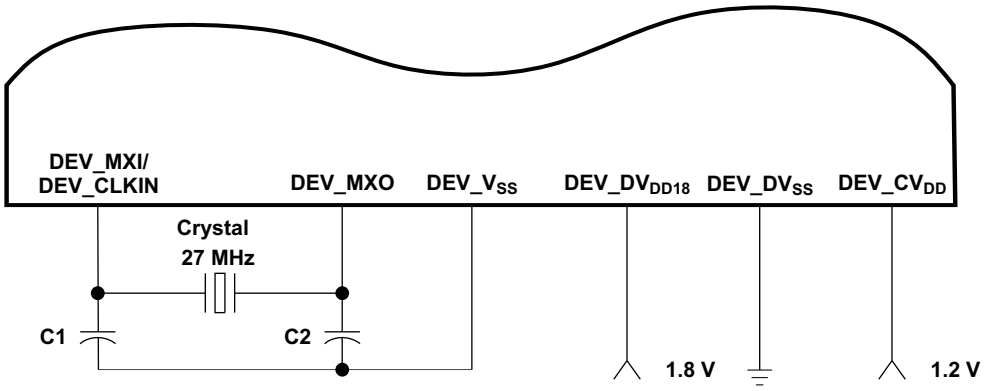

A. The DEV_CV_{DD} core voltage value is device dependent (e.g., when using SmartReflex, DEV_CV_{DD} can be either 1.2 V or 1.05 V).

Figure 7-8. 27-MHz System Oscillator(A)

The load capacitors, C1 and C2, should be chosen such that the equation is satisfied (typical values are C1 = C2 = 10 pF). C_L in the equation is the load specified by the crystal manufacturer. All discrete components used to implement the oscillator circuit should be placed as close as possible to the associated oscillator pins (DEV_MXI and DEV_MXO) and to the DEV_V_{SS} pin.

$$C_L = \frac{C_1 C_2}{(C_1 + C_2)}$$

Table 7-6. Input Requirements for Crystal on the 27-MHz System Oscillator

	PARAMETER	MIN	NOM	MAX	UNIT
	Start-up time (from power up until oscillating at stable frequency of 27 MHz)			4	ms
	Oscillation frequency		27		MHz
	ESR			60	Ω

7.4.1.2 24-MHz Auxiliary Oscillator Clock Input Option 1—Crystal

In this option, a crystal is used as the external clock input to the DM6467 auxiliary oscillator.

The 24-MHz oscillator provides the reference clock for USB and UART peripherals and the internal clock source for the McASP peripherals. The on-chip oscillator requires an external 24-MHz crystal connected across the AUX_MXI and AUX_MXO pins, along with two load capacitors, as shown in Figure 7-9. The external crystal load capacitors ***must*** be connected only to the 24-MHz oscillator ground pin (AUX_V_{SS}). ***Do not*** connect to board ground (V_{SS}). The AUX_DV_{DD18} pin can be connected to the same 1.8 V power supply as DV_{DDR2}.

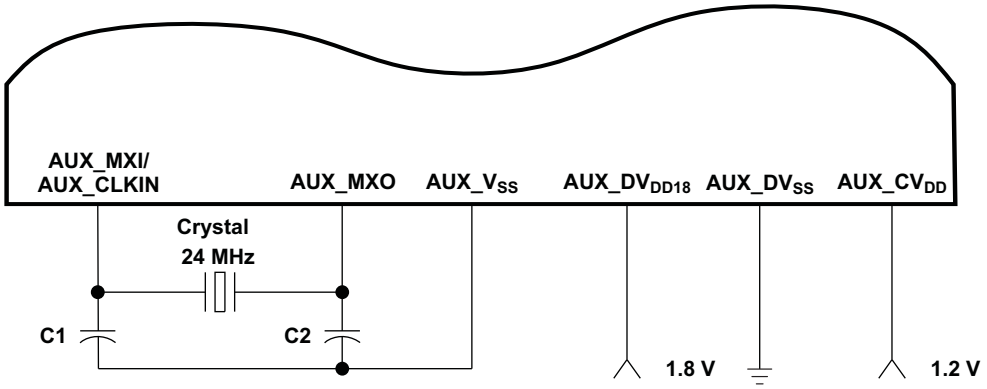

A. The AUX_CV_{DD} core voltage value is device dependent (e.g., when using SmartReflex, AUX_CV_{DD} can be either 1.2 V or 1.05 V).

Figure 7-9. 24-MHz Auxiliary Oscillator(A)

The load capacitors, C1 and C2, should be chosen such that the equation is satisfied (typical values are C1 = C2 = 10 pF). C_L in the equation is the load specified by the crystal manufacturer. All discrete components used to implement the oscillator circuit should be placed as close as possible to the associated oscillator pins (AUX_MXI and AUX_MXO) and to the AUX_V_{SS} pin.

$$C_L = \frac{C_1 C_2}{(C_1 + C_2)}$$

Table 7-7. Input Requirements for Crystal on the 24-MHz Auxiliary Oscillator

	PARAMETER	MIN	NOM	MAX	UNIT
	Start-up time (from power up until oscillating at stable frequency of 24 MHz)			4	ms
	Oscillation frequency		24		MHz
	ESR			60	Ω
(1)	Frequency stability			±50	ppm

(1) If the USB is used, a 24-MHz, 50-ppm crystal is recommended.

Copyright © 2007–2012, Texas Instruments Incorporated

7.4.2 Clock Input Option 2—1.8-V LVCMOS-Compatible Clock Input

7.4.2.1 27-MHz System Oscillator Clock Input Option 2—1.8-V LVCMOS-Compatible Clock Input

In this option, a 1.8-V LVCMOS-Compatible Clock Input is used as the external clock input to the system oscillator. The external connections are shown in Figure 7-10. The DEV_MXI/DEV_CLKIN pin is connected to the 1.8-V LVCMOS-Compatible clock source. The DEV_MXO pin is left unconnected. The DEV_V_{SS} pin is connected to board ground (V_{SS}). The DEV_DV_{DD18} pin can be connected to the same 1.8-V power supply as DV_{DDR2}.

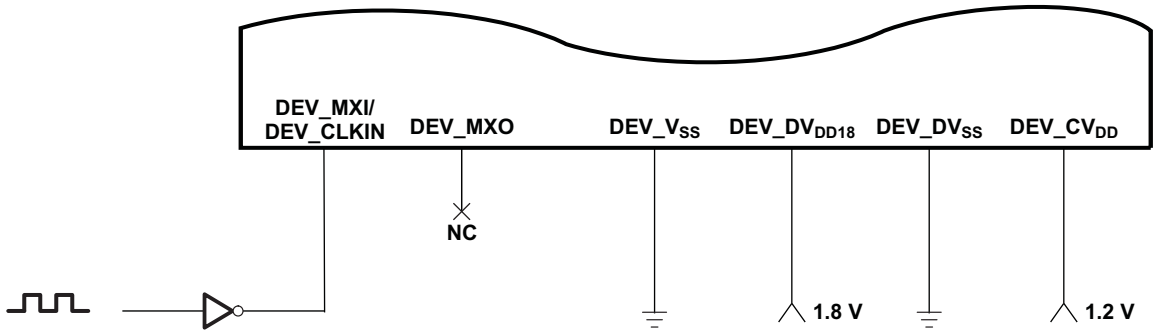

A. The DEV_CV_{DD} core voltage value is device dependent (e.g., when using SmartReflex, DEV_CV_{DD} can be either 1.2 V or 1.05 V).

Figure 7-10. 1.8-V LVCMOS-Compatible Clock Input(A)

The clock source ***must*** meet the DEV_MXI/DEV_CLKIN timing requirements in Section 7.5.5, *Clock PLL Electrical Data/Timing (Input and Output Clocks)*.

7.4.2.2 24-MHz Auxiliary Oscillator Clock Input Option 2—1.8-V LVCMOS-Compatible Clock Input

In this option, a 1.8-V LVCMOS-Compatible Clock Input is used as the external clock input to the auxiliary oscillator. The external connections are shown in Figure 7-11. The AUX_MXI/AUX_CLKIN pin is connected to the 1.8-V LVCMOS-Compatible clock source. The AUX_MXO pin is left unconnected. The AUX_V_{SS} pin is connected to board ground (V_{SS}). The AUX_DV_{DD18} pin can be connected to the same 1.8-V power supply as DV_{DDR2}.

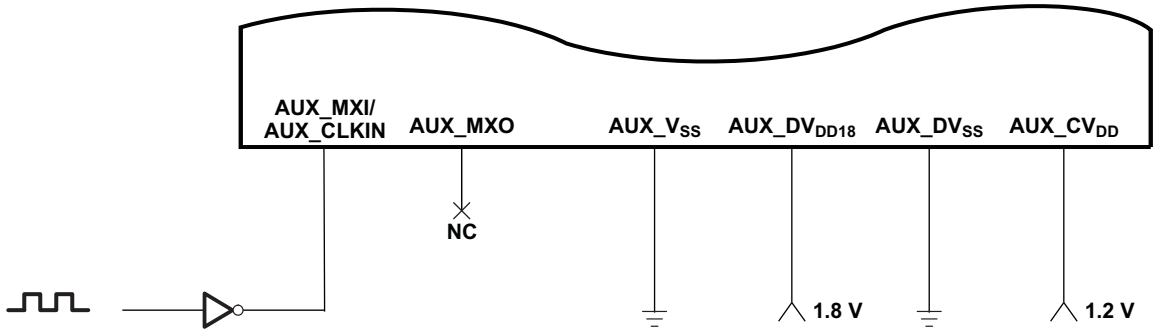

A. The AUX_CV_{DD} core voltage value is device dependent (e.g., when using SmartReflex, AUX_CV_{DD} can be either 1.2 V or 1.05 V).

Figure 7-11. 1.8-V LVCMOS-Compatible Clock Input(A)

The clock source ***must*** meet the AUX_MXI/AUX_CLKIN timing requirements in Section 7.5.5, *Clock PLL Electrical Data/Timing (Input and Output Clocks)*.

Copyright © 2007–2012, Texas Instruments Incorporated

7.5 Clock PLLs

There are two independently controlled PLLs on DM6467. PLL1 generates the frequencies required for the ARM, DSP, HDVICP0/1, EDMA, and peripherals. PLL2 generates the frequencies required for the DDR2 interface. The recommended reference clock for both PLLs is the 27-MHz crystal input. The DM6467 has a third PLL that is embedded within the USB2.0 PHY and the 24-MHz oscillator is its reference clock source. This particular PLL is only usable for USB operation, and is discussed further in the *TMS320DM646x DMSoC Universal Serial Bus (USB) Controller* User's Guide (literature number SPRUER7).

7.5.1 PLL1 and PLL2

Both PLL1 and PLL2 power are supplied externally via the 1.8-V PLL power-supply pins ($PLL1V_{DD18}$ and $PLL2V_{DD18}$). An external EMI filter circuit ***must*** be added to $PLL1V_{DD18}$ and $PLL2V_{DD18}$, as shown in Figure 7-12. The 1.8-V supply of the EMI filters must be from the same 1.8-V power plane supplying the device's 1.8-V I/O power-supply pins (DV_{DDR2}). TI recommends EMI filter manufacturer Murata, part number NFM18CC222R1C3.

All PLL external components (C1, C2, C3, C4, and the EMI Filters) ***must*** be placed as close to the device as possible. For the best performance, TI recommends that all the PLL external components be on a single side of the board without jumpers, switches, or components other than the ones shown in Figure 7-12. For reduced PLL jitter, maximize the spacing between switching signals and the PLL external components (C1, C2, C3, C4, and the EMI Filters).

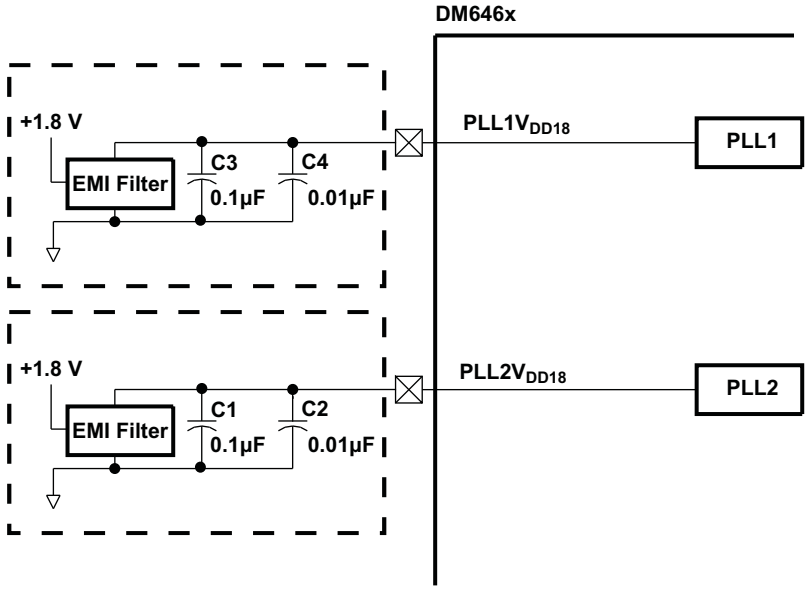

Figure 7-12. PLL1 and PLL2 External Connection

The minimum CLKIN rise and fall times should also be observed. For the input clock timing requirements, see Section 7.5.5, *Clock PLL Electrical Data/Timing (Input and Output Clocks)*.

There is an allowable range for PLL multiplier (PLLM). There is a minimum and maximum operating frequency for DEV_MXI/DEV_CLKIN, PLLOUT, AUX_MXI/AUX_CLKIN, and the device clocks (SYSCLKs). The PLL Controllers ***must*** be configured not to exceed any of these constraints documented in this section (certain combinations of external clock inputs, internal dividers, and PLL multiply ratios might not be supported). For these constraints (ranges), see Table 7-8 through Table 7-10 .

Copyright © 2007–2012, Texas Instruments Incorporated

Table 7-8. PLL1 and PLL2 Multiplier Ranges

PLL MULTIPLIER (PLLM)	-594		-729	
	MIN	MAX	MIN	MAX
PLL1 Multiplier	x14	x22	x14	x27
PLL2 Multiplier	x14	x22	x14	x23

Table 7-9. PLLC1 Clock Frequency Ranges

CLOCK SIGNAL NAME	-594		-729		UNIT
	MIN	MAX	MIN	MAX	
DEV_MXI/DEV_CLKIN(1)	20	30	20	30	MHz
PLLOUT	400	594	400	729	MHz
SYSCLK1 (PLLDIV1 Domain)		594		729	MHz

(1) DEV_MXI/DEV_CLKIN input clock is used for both PLL Controllers (PLLC1 and PLLC2).

Table 7-10. PLLC2 Clock Frequency Ranges

CLOCK SIGNAL NAME	-594		-729		UNIT
	MIN	MAX	MIN	MAX	
DEV_MXI/DEV_CLKIN(1)	20	30	20	30	MHz
PLLOUT	400	594	400	621	MHz
PLL2_SYSCLK1 (to DDR2 PHY)		594		621	MHz

(1) DEV_MXI/DEV_CLKIN input clock is used for both PLL Controllers (PLLC1 and PLLC2).

Both PLL1 and PLL2 have stabilization, lock, and reset timing requirements that ***must*** be followed.

The PLL stabilization time is the amount of time that ***must*** be allotted for the internal PLL regulators to become stable after the PLL is powered up (after the PLLCTL.PLLPWRDN bit goes through a 1-to-0 transition). The PLL should *not* be operated until this stabilization time has expired. This stabilization step ***must*** be applied after these resets—a Power-on Reset, a Warm Reset, or a Max Reset, as the PLLCTL.PLLPWRDN bit resets to a "1". For the PLL stabliziation time value, see Table 7-11.

The PLL reset time is the amount of wait time needed for the PLL to properly reset (writing PLLRST = 1) before bringing the PLL out of reset (writing PLLRST = 0). For the PLL reset time value, see Table 7-11.

The PLL lock time is the amount of time needed from when the PLL is taken out of reset (PLLRST = 0 with PLLEN = 0) to when to when the PLL controller can be switched to PLL mode (PLLEN = 1). For the PLL lock time value, see Table 7-11.

Table 7-11. PLL1 and PLL2 Stabilization, Lock, and Reset Times

PLL STABILIZATION/ LOCK/RESET TIME	MIN	NOM	MAX	UNIT
PLL Stabilization Time	150			µs
PLL Lock Time			2000C(1)	ns
PLL Reset Time	128C(1)			ns

(1) C = CLKIN cycle time in ns. For example, when DEV_MXI/DEV_CLKIN or AUX_MXI/AUX_CLKIN frequency is 27 MHz, use C = 37.037 ns.

For details on the PLL initialization software sequence, see the *TMS320DM646x DMSoC ARM Subsystem* Reference Guide (literature number SPRUEP9).

For more information on the clock domains and their clock ratio restrictions, see Section 7.3.4, *DM6467 Power and Clock Domains*.

Copyright © 2007–2012, Texas Instruments Incorporated

7.5.2 PLL Controller Register Description(s)

A summary of the PLL controller registers is shown in Table 7-12. For more details, see the *TMS320DM646x DMSoC ARM Subsystem* Reference Guide (literature number SPRUEP9).

Table 7-12. PLL and Reset Controller Registers

HEX ADDRESS RANGE	ACRONYM	REGISTER NAME
PLL1 Controller Registers		
0x01C4 0800	PID	Peripheral ID Register
0x01C4 08E4	RSTYPE	Reset Type Register
0x01C4 0900	PLLCTL	PLL Controller 1 PLL Control Register
0x01C4 0910	PLLM	PLL Controller 1 PLL Multiplier Control Register
0x01C4 0918	PLLDIV1	PLL Controller 1 Divider 1 Register (SYSCLK1)
0x01C4 091C	PLLDIV2	PLL Controller 1 Divider 2 Register (SYSCLK2)
0x01C4 0920	PLLDIV3	PLL Controller 1 Divider 3 Register (SYSCLK3)
0x01C4 0928	–	Reserved
0x01C4 092C	BPDIV	PLL Controller 1 Bypass Control-Divider Register (SYSCLKBP)
0x01C4 0938	PLLCMD	PLL Controller 1 Command Register
0x01C4 093C	PLLSTAT	PLL Controller 1 Status Register (Shows PLLC1 PLLCTL Status)
0x01C4 0940	ALNCTL	PLL Controller 1 Clock Align Control Register (Indicates Which SYSCLKs Need to be Aligned for Proper Device Operation)
0x01C4 0944	DCHANGE	PLL Controller 1 PLLDIV Divider Ratio Change Status Register (Indicates if SYSCLK Divide Ratio has been modified)
0x01C4 0948	CKEN	PLL Controller 1 Clock Enable Control Register
0x01C4 094C	CKSTAT	PLL Controller 1 Clock Status Register (For All Clocks Except SYSCLKx)
0x01C4 0950	SYSTAT	PLL Controller 1 SYSCLK Status Register (Indicates SYSCLK on/off Status)
0x01C4 0960	PLLDIV4	PLL Controller 1 Divider 4 Register (SYSCLK4)
0x01C4 0964	PLLDIV5	PLL Controller 1 Divider 5 Register (SYSCLK5)
0x01C4 0968	PLLDIV6	PLL Controller 1 Divider 6 Register (SYSCLK6)
0x01C4 096C	–	Reserved
0x01C4 0970	PLLDIV8	PLL Controller 1 Divider 8 Register (SYSCLK8)
0x01C4 0974	PLLDIV9	PLL Controller 1 Divider 9 Register (SYSCLK9)
PLL2 Controller Registers		
0x01C4 0C00	PID	Peripheral ID Register
0x01C4 0D00	PLLCTL	PLL Controller 2 PLL Control Register
0x01C4 0D10	PLLM	PLL Controller 2 PLL Multiplier Control Register
0x01C4 0D18	PLLDIV1	PLL Controller 2 Divider 1 Register (PLL2_SYSCLK1 DDR2 PHY)
0x01C4 0D28	–	Reserved
0x01C4 0D38	PLLCMD	PLL Controller 2 Command Register
0x01C4 0D3C	PLLSTAT	PLL Controller 2 Status Register (Shows PLLC2 PLLCTL Status)
0x01C4 0D40	ALNCTL	PLL Controller 2 Clock Align Control Register (Indicates Which SYSCLKs Need to be Aligned for Proper Device Operation)
0x01C4 0D44	DCHANGE	PLL Controller 2 PLLDIV Divider Ratio Change Status Register (Indicates if SYSCLK Divide Ratio has been modified)
0x01C4 0D48	CKEN	PLL Controller 2 Clock Enable Control Register
0x01C4 0D4C	CKSTAT	PLL Controller 2 Clock Status Register (For All Clocks Except SYSCLKx)
0x01C4 0D50	SYSTAT	PLL Controller 2 SYSCLK Status Register (Indicates SYSCLK on/off Status)
0x01C4 0D54 - 0x01C4 0FFF	–	Reserved

Copyright © 2007–2012, Texas Instruments Incorporated

7.5.3 Clock PLL Considerations With External Clock Sources

If the internal oscillator is bypassed, to minimize the clock jitter a single clean power supply should power both the DM6467 device and the external clock oscillator circuit. The minimum CLKIN rise and fall times should also be observed. For the input clock timing requirements, see Section 7.5.5, *Clock PLL Electrical Data/Timing (Input and Output Clocks)*.

Rise/fall times, duty cycles (high/low pulse durations), and the load capacitance of the external clock source must meet the device requirements in this data manual (see Section 6.3, *Electrical Characteristics Over Recommended Ranges of Supply Voltage and Operating Temperature*, and Section 7.5.5, *Clock PLL Electrical Data/Timing (Input and Output Clocks)*.

7.5.4 Output Clocks (CLKOUT0, AUDIO_CLK1, AUDIO_CLK0) - Clock Select Logic

The DM6467 includes a selectable general-purpose clock output (CLKOUT0) [see Figure 7-13] and two selectable audio output clocks (AUDIO_CLK0 and AUDIO_CLK1) for synchronizing external audio devices with the on-chip system or video clocks [see Figure 7-14 and Figure 7-15]. The source for these output clocks is controlled by the CLKCTL register (0x01C4 005C). For more detailed information on the CLKCTL register, see Section 4.3.3, *Clock and Oscillator Control*.

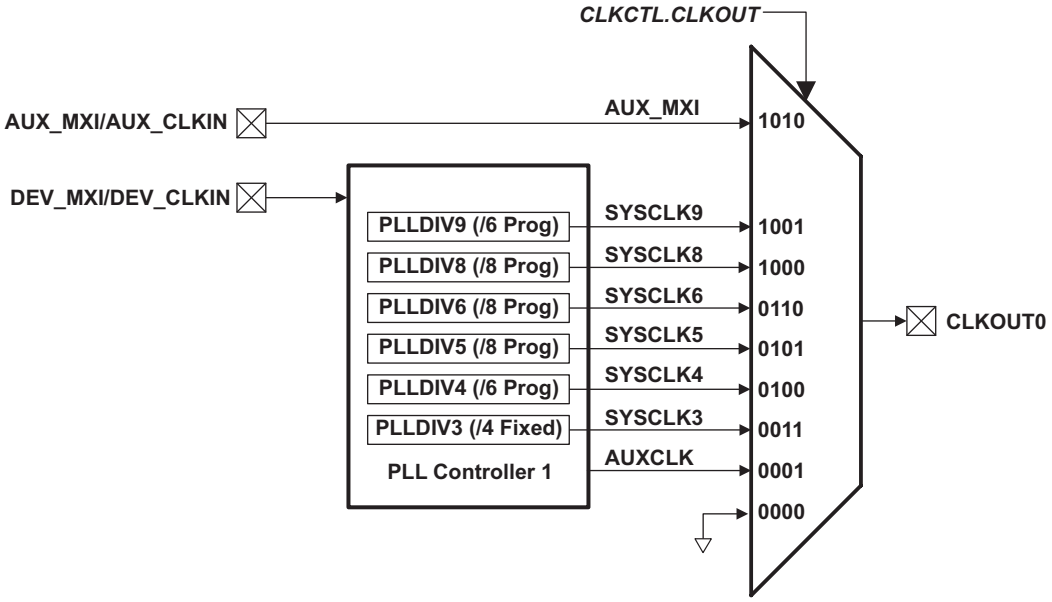

Figure 7-13. CLKOUT0 Source Selection

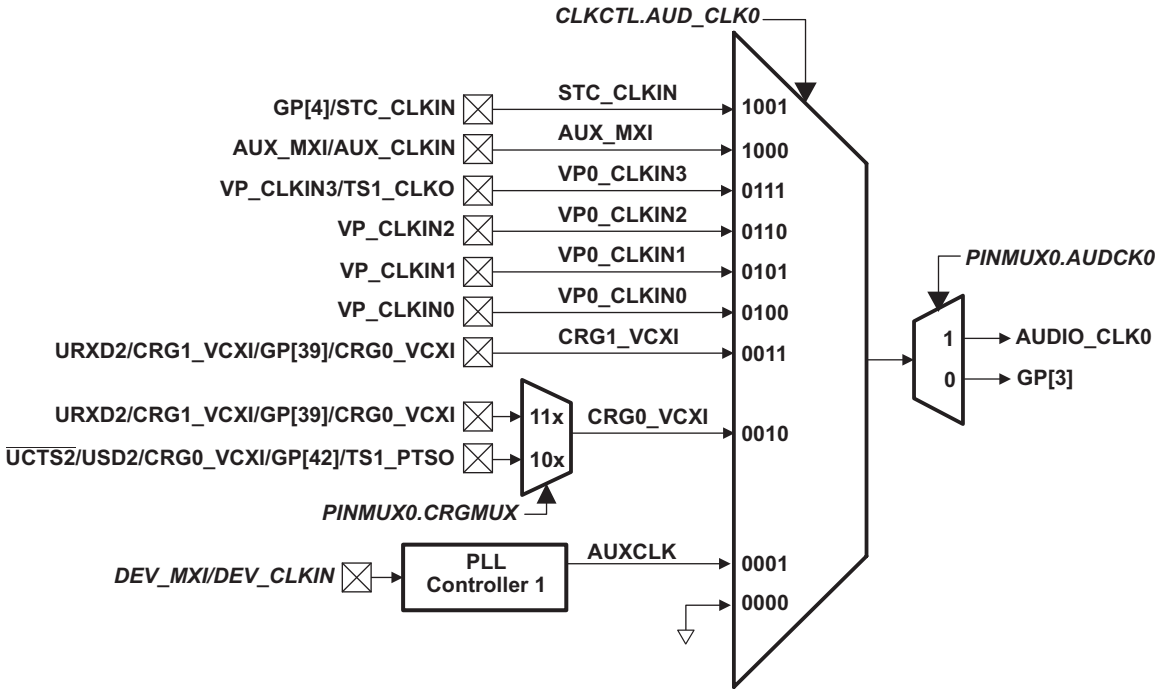

Figure 7-14. AUDIO_CLK0 Source Selection

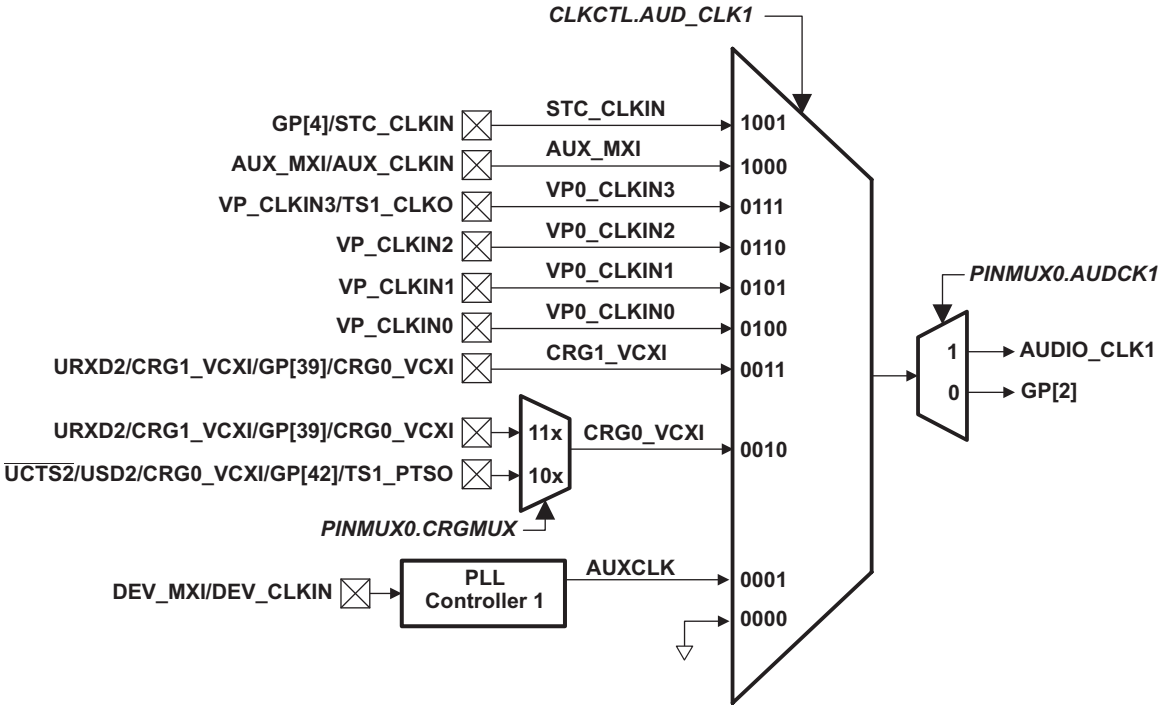

Figure 7-15. AUDIO_CLK1 Source Selection

Copyright © 2007–2012, Texas Instruments Incorporated

7.5.5 Clock PLL Electrical Data/Timing (Input and Output Clocks)

Table 7-13. Timing Requirements for DEV_MXI/DEV_CLKIN(1) (2) (3) (4) (see Figure 7-16)

NO.			-594, -729			UNIT
			MIN	NOM	MAX	
1	$t_{c(DMXI)}$	Cycle time, DEV_MXI/DEV_CLKIN	33.$\overline{33}$	37.$\overline{037}$	50	ns
2	$t_{w(DMXIH)}$	Pulse duration, DEV_MXI/DEV_CLKIN high	0.45C		0.55C	ns
3	$t_{w(DMXIL)}$	Pulse duration, DEV_MXI/DEV_CLKIN low	0.45C		0.55C	ns
4	$t_{t(DMXI)}$	Transition time, DEV_MXI/DEV_CLKIN			7	ns
5	$t_{J(DMXI)}$	Period jitter, DEV_MXI/DEV_CLKIN			0.02C	ns

(1) The DEV_MXI/DEV_CLKIN frequency and PLL multiply factor should be chosen such that the resulting clock frequency is within the specific range for CPU operating frequency. For example, for a -594 speed device with a 27-MHz DEV_CLKIN frequency, the PLL multiply factor should be ≤ 22 and for a -729 speed device with a 27-MHz DEV_CLKIN frequency, the PLL multiply factor should be ≤ 27.
(2) The reference points for the rise and fall transitions are measured at V_{IL} MAX and V_{IH} MIN.
(3) For more details on the PLL multiplier factors, see the *TMS320DM646x DMSoC ARM Subsystem* Reference Guide (Literature Number SPRUEP9).
(4) C = DEV_CLKIN cycle time in ns. For example, when DEV_MXI/DEV_CLKIN frequency is 27 MHz, use C = 37.$\overline{037}$ ns.

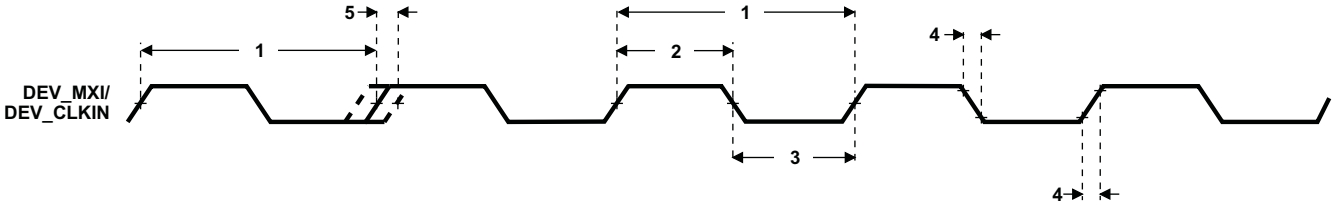

Figure 7-16. DEV_MXI/DEV_CLKIN Timing

Table 7-14. Timing Requirements for AUX_MXI/AUX_CLKIN (1) (2) (3) (see Figure 7-17)

NO.			-594, -729			UNIT
			MIN	NOM	MAX	
1	$t_{c(AMXI)}$	Cycle time, AUX_MXI/AUX_CLKIN		41.6 or 20.83 (4)		ns
2	$t_{w(AMXIH)}$	Pulse duration, AUX_MXI/AUX_CLKIN high	0.45C		0.55C	ns
3	$t_{w(AMXIL)}$	Pulse duration, AUX_MXI/AUX_CLKIN low	0.45C		0.55C	ns
4	$t_{t(AMXI)}$	Transition time, AUX_MXI/AUX_CLKIN			7	ns
5	$t_{J(AMXI)}$	Period jitter, AUX_MXI/AUX_CLKIN			0.02C	ns
6	S_f	Frequency stability, AUX_MXI/AUX_CLKIN(4)			± 50	ppm

(1) The reference points for the rise and fall transitions are measured at V_{IL} MAX and V_{IH} MIN.
(2) For more details on the PLL, see the *TMS320DM646x DMSoC Universal Serial Bus (USB) Controller* User's Guide (Literature Number SPRUER7).
(3) C = DEV_CLKIN cycle time in ns. For example, when AUX_MXI/AUX_CLKIN frequency is 24 MHz, use C = 41.6 ns and when AUX_MXI/AUX_CLKIN frequency is 48 MHz, use C = 20.83 ns.
(4) If the USB is used, a 24-MHz, 50-ppm crystal is recommended.

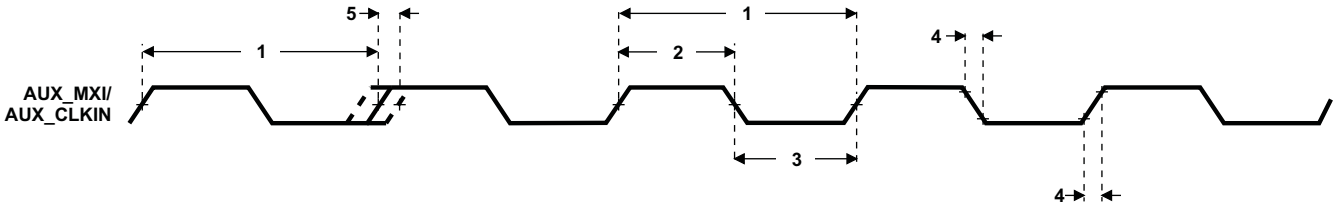

Figure 7-17. AUX_MXI/AUX_CLKIN Timing

Copyright © 2007–2012, Texas Instruments Incorporated

Table 7-15. Switching Characteristics Over Recommended Operating Conditions for CLKOUT0 (1) (2) (see Figure 7-18)

NO.	PARAMETER		-594, -729		UNIT
			MIN	MAX	
1	$t_{c(CLKOUT0)}$	Cycle time, CLKOUT0	6.734	296.$\overline{296}$	ns
2	$t_{w(CLKOUT0H)}$	Pulse duration, CLKOUT0 high	0.4P	0.6P	ns
3	$t_{w(CLKOUT0L)}$	Pulse duration, CLKOUT0 low	0.4P	0.6P	ns
4	$t_{t(CLKOUT0)}$	Transition time, CLKOUT0		0.05P	ns

(1) The reference points for the rise and fall transitions are measured at V_{OL} MAX and V_{OH} MIN.
(2) P = 1/CLKOUT0 clock frequency in nanoseconds (ns). For example, when CLKOUT0 frequency is 27 MHz, use P = 37.$\overline{037}$ ns.

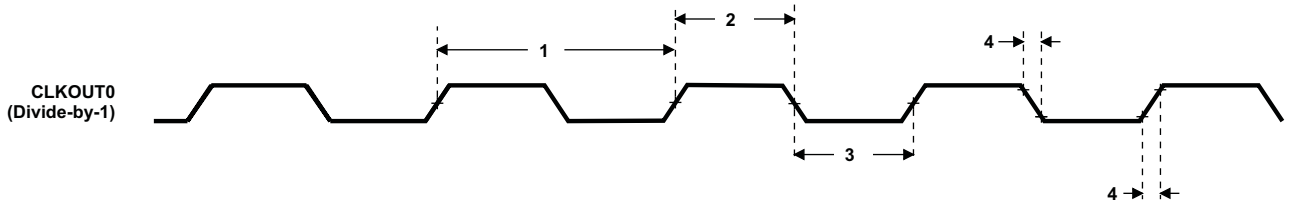

Figure 7-18. CLKOUT0 Timing

7.6 Enhanced Direct Memory Access (EDMA3) Controller

The EDMA controller handles all data transfers between memories and the device slave peripherals on the DM6467 device. These data transfers include cache servicing, non-cacheable memory accesses, user-programmed data transfers, and host accesses. These are summarized as follows:

- Transfer to/from on-chip memories
  - ARM926 TCM
  - DSP L1D memory
  - DSP L2 memory
- Transfer to/from external storage
  - DDR2 SDRAM
  - NAND flash
  - Asynchronous EMIF (EMIFA)
  - ATA
- Transfer to/from peripherals/hosts
  - VLYNQ
  - HPI
  - McASP0/1
  - SPI
  - I2C
  - PWM0/1
  - UART0/1/2
  - PCI

The EDMA supports two addressing modes: constant addressing and increment addressing. On the DM6467, constant addressing mode is **not** supported by any peripheral or internal memory. For more information on these two addressing modes, see the *TMS320DM646x DMSoC Enhanced Direct Memory Access (EDMA) Controller* User's Guide (literature number SPRUEQ5).

The DM6467 device supports a programmable default burst size feature. The default burst size of each EDMA3 Transfer Controller (TC) is configured via the EDMA Transfer Controller Default Burst Size Configuration register (EDMATCCFG). For more detailed information on the EDMATCCFG register, see Section 4.6.2, *Peripheral Selection After Device Reset*.

7.6.1 EDMA3 Channel Synchronization Events

The EDMA supports up to 64 EDMA channels which service peripheral devices and external memory. Table 7-16 lists the source of EDMA synchronization events associated with each of the programmable EDMA channels. For the DM6467 device, the association of an event to a channel is fixed; each of the EDMA channels has one specific event associated with it. These specific events are captured in the EDMA event registers (ER, ERH) even if the events are disabled by the EDMA event enable registers (EER, EERH). For more detailed information on the EDMA module and how EDMA events are enabled, captured, processed, linked, chained, and cleared, etc., see the *TMS320DM646x DMSoC Enhanced Direct Memory Access (EDMA) Controller* User's Guide (literature number SPRUEQ5)

Table 7-16. DM6467 EDMA Channel Synchronization Events(1)

EDMA CHANNEL	EVENT NAME	EVENT DESCRIPTION
0-3	–	Reserved

(1) In addition to the events shown in this table, each of the 64 channels can also be synchronized with the transfer completion or alternate transfer completion events. For more detailed information on EDMA event-transfer chaining, see the *TMS320DM646x DMSoC Enhanced Direct Memory Access (EDMA) Controller* User's Guide (literature number SPRUEQ5).

Copyright © 2007–2012, Texas Instruments Incorporated

Table 7-16. DM6467 EDMA Channel Synchronization Events[1] (continued)

EDMA CHANNEL	EVENT NAME	EVENT DESCRIPTION
4	AXEVTE0	McASP0 Transmit Event Even
5	AXEVTO0	McASP0 Transmit Event Odd
6	AXEVT0	McASP0 Transmit Event
7	AREVTE0	McASP0 Receive Event Even
8	AREVTO0	McASP0 Receive Event Odd
9	AREVT0	McASP0 Receive Event
10	AXEVTE1	McASP1 Transmit Event Even
11	AXEVTO1	McASP1 Transmit Event Odd
12	AXEVT1	McASP1 Transmit Event
13-15	–	Reserved
16	SPIXEVT	SPI Transmit Event
17	SPIREVT	SPI Receive Event
18	URXEVT0	UART 0 Receive Event
19	UTXEVT0	UART 0 Transmit Event
20	URXEVT1	UART 1 Receive Event
21	UTXEVT1	UART 1 Transmit Event
22	URXEVT2	UART 2 Receive Event
23	UTXEVT2	UART 2 Transmit Event
24-27	–	Reserved
28	ICREVT	I2C Receive Event
29	ICXEVT	I2C Transmit Event
30-31	–	Reserved [Unused]
32	GPINT0	GPIO 0 Interrupt Event
33	GPINT1	GPIO 1 Interrupt Event
34	GPINT2	GPIO 2 Interrupt Event
35	GPINT3	GPIO 3 Interrupt Event
36	GPINT4	GPIO 4 Interrupt Event
37	GPINT5	GPIO 5 Interrupt Event
38	GPINT6	GPIO 6 Interrupt Event
39	GPINT7	GPIO 7 Interrupt Event
40	GPBNKINT0	GPIO Bank 0 Interrupt Event
41	GPBNKINT1	GPIO Bank 1 Interrupt Event
42	GPBNKINT2	GPIO Bank 2 Interrupt Event
43	CP_ECDCMP1	HDVICP1 ECDCMP Interrupt Event
44	CP_MC1	HDVICP1 MC Interrupt Event
45	CP_BS1	HDVICP1 BS Interrupt Event
46	CP_CALC1	HDVICP1 CALC Interrupt Event
47	CP_LPF1	HDVICP1 LPF Interrupt Event
48	TEVTL0	Timer 0 Event Low Interrupt
49	TEVTH0	Timer 0 Event High Interrupt
50	TEVTL1	Timer 1 Event Low Interrupt
51	TEVTH1	Timer 1 Event High Interrupt
52	PWM0	PWM 0 Interrupt Event
53	PWM1	PWM 1 Interrupt Event
54-56	–	Reserved
57	CP_ME0	HDVICP0 ME Interrupt Event
58	CP_IPE0	HDVICP0 IPE Interrupt Event

Copyright © 2007–2012, Texas Instruments Incorporated

Table 7-16. DM6467 EDMA Channel Synchronization Events[1] (continued)

EDMA CHANNEL	EVENT NAME	EVENT DESCRIPTION
59	CP_ECDCMP0	HDVICP0 ECDCMP Interrupt Event
60	CP_MC0	HDVICP0 MC Interrupt Event
61	CP_BS0	HDVICP0 BS Interrupt Event
62	CP_CALC0	HDVICP0 CALC Interrupt Event
63	CP_LPF0	HDVICP0 LPF Interrupt Event

Copyright © 2007–2012, Texas Instruments Incorporated

7.6.2 EDMA Peripheral Register Description(s)

Table 7-17 lists the EDMA registers, their corresponding acronyms, and DM6467 device memory locations.

Table 7-17. DM6467 EDMA Registers

HEX ADDRESS RANGE	ACRONYM	REGISTER NAME
Channel Controller Registers		
0x01C0 0000	PID	Peripheral Identification Register
0x01C0 0004	CCCFG	EDMA3CC Configuration Register
0x01C0 0008 - 0x01C0 00FF	–	Reserved
Global Registers		
0x01C0 0100	DCHMAP0	DMA Channel 0 Mapping to PaRAM Register
0x01C0 0104	DCHMAP1	DMA Channel 1 Mapping to PaRAM Register
0x01C0 0108	DCHMAP2	DMA Channel 2 Mapping to PaRAM Register
0x01C0 010C	DCHMAP3	DMA Channel 3 Mapping to PaRAM Register
0x01C0 0110	DCHMAP4	DMA Channel 4 Mapping to PaRAM Register
0x01C0 0114	DCHMAP5	DMA Channel 5 Mapping to PaRAM Register
0x01C0 0118	DCHMAP6	DMA Channel 6 Mapping to PaRAM Register
0x01C0 011C	DCHMAP7	DMA Channel 7 Mapping to PaRAM Register
0x01C0 0120	DCHMAP8	DMA Channel 8 Mapping to PaRAM Register
0x01C0 0124	DCHMAP9	DMA Channel 9 Mapping to PaRAM Register
0x01C0 0128	DCHMAP10	DMA Channel 10 Mapping to PaRAM Register
0x01C0 012C	DCHMAP11	DMA Channel 11 Mapping to PaRAM Register
0x01C0 0130	DCHMAP12	DMA Channel 12 Mapping to PaRAM Register
0x01C0 0134	DCHMAP13	DMA Channel 13 Mapping to PaRAM Register
0x01C0 0138	DCHMAP14	DMA Channel 14 Mapping to PaRAM Register
0x01C0 013C	DCHMAP15	DMA Channel 15 Mapping to PaRAM Register
0x01C0 0140	DCHMAP16	DMA Channel 16 Mapping to PaRAM Register
0x01C0 0144	DCHMAP17	DMA Channel 17 Mapping to PaRAM Register
0x01C0 0148	DCHMAP18	DMA Channel 18 Mapping to PaRAM Register
0x01C0 014C	DCHMAP19	DMA Channel 19 Mapping to PaRAM Register
0x01C0 0150	DCHMAP20	DMA Channel 20 Mapping to PaRAM Register
0x01C0 0154	DCHMAP21	DMA Channel 21 Mapping to PaRAM Register
0x01C0 0158	DCHMAP22	DMA Channel 22 Mapping to PaRAM Register
0x01C0 015C	DCHMAP23	DMA Channel 23 Mapping to PaRAM Register
0x01C0 0160	DCHMAP24	DMA Channel 24 Mapping to PaRAM Register
0x01C0 0164	DCHMAP25	DMA Channel 25 Mapping to PaRAM Register
0x01C0 0168	DCHMAP26	DMA Channel 26 Mapping to PaRAM Register
0x01C0 016C	DCHMAP27	DMA Channel 27 Mapping to PaRAM Register
0x01C0 0170	DCHMAP28	DMA Channel 28 Mapping to PaRAM Register
0x01C0 0174	DCHMAP29	DMA Channel 29 Mapping to PaRAM Register
0x01C0 0178	DCHMAP30	DMA Channel 30 Mapping to PaRAM Register
0x01C0 017C	DCHMAP31	DMA Channel 31 Mapping to PaRAM Register
0x01C0 0180	DCHMAP32	DMA Channel 32 Mapping to PaRAM Register
0x01C0 0184	DCHMAP33	DMA Channel 33 Mapping to PaRAM Register
0x01C0 0188	DCHMAP34	DMA Channel 34 Mapping to PaRAM Register
0x01C0 018C	DCHMAP35	DMA Channel 35 Mapping to PaRAM Register
0x01C0 0190	DCHMAP36	DMA Channel 36 Mapping to PaRAM Register
0x01C0 0194	DCHMAP37	DMA Channel 37 Mapping to PaRAM Register

Copyright © 2007–2012, Texas Instruments Incorporated

Table 7-17. DM6467 EDMA Registers (continued)

HEX ADDRESS RANGE	ACRONYM	REGISTER NAME
0x01C0 0198	DCHMAP38	DMA Channel 38 Mapping to PaRAM Register
0x01C0 019C	DCHMAP39	DMA Channel 39 Mapping to PaRAM Register
0x01C0 01A0	DCHMAP40	DMA Channel 40 Mapping to PaRAM Register
0x01C0 01A4	DCHMAP41	DMA Channel 41 Mapping to PaRAM Register
0x01C0 01A8	DCHMAP42	DMA Channel 42 Mapping to PaRAM Register
0x01C0 01AC	DCHMAP43	DMA Channel 43 Mapping to PaRAM Register
0x01C0 01B0	DCHMAP44	DMA Channel 44 Mapping to PaRAM Register
0x01C0 01B4	DCHMAP45	DMA Channel 45 Mapping to PaRAM Register
0x01C0 01B8	DCHMAP46	DMA Channel 46 Mapping to PaRAM Register
0x01C0 01BC	DCHMAP47	DMA Channel 47 Mapping to PaRAM Register
0x01C0 01C0	DCHMAP48	DMA Channel 48 Mapping to PaRAM Register
0x01C0 01C4	DCHMAP49	DMA Channel 49 Mapping to PaRAM Register
0x01C0 01C8	DCHMAP50	DMA Channel 50 Mapping to PaRAM Register
0x01C0 01CC	DCHMAP51	DMA Channel 51 Mapping to PaRAM Register
0x01C0 01D0	DCHMAP52	DMA Channel 52 Mapping to PaRAM Register
0x01C0 01D4	DCHMAP53	DMA Channel 53 Mapping to PaRAM Register
0x01C0 01D8	DCHMAP54	DMA Channel 54 Mapping to PaRAM Register
0x01C0 01DC	DCHMAP55	DMA Channel 55 Mapping to PaRAM Register
0x01C0 01E0	DCHMAP56	DMA Channel 56 Mapping to PaRAM Register
0x01C0 01E4	DCHMAP57	DMA Channel 57 Mapping to PaRAM Register
0x01C0 01E8	DCHMAP58	DMA Channel 58 Mapping to PaRAM Register
0x01C0 01EC	DCHMAP59	DMA Channel 59 Mapping to PaRAM Register
0x01C0 01F0	DCHMAP60	DMA Channel 60 Mapping to PaRAM Register
0x01C0 01F4	DCHMAP61	DMA Channel 61 Mapping to PaRAM Register
0x01C0 01F8	DCHMAP62	DMA Channel 62 Mapping to PaRAM Register
0x01C0 01FC	DCHMAP63	DMA Channel 63 Mapping to PaRAM Register
0x01C0 0200	QCHMAP0	QDMA Channel 0 Mapping to PaRAM Register
0x01C0 0204	QCHMAP1	QDMA Channel 1 Mapping to PaRAM Register
0x01C0 0208	QCHMAP2	QDMA Channel 2 Mapping to PaRAM Register
0x01C0 020C	QCHMAP3	QDMA Channel 3 Mapping to PaRAM Register
0x01C0 0210	QCHMAP4	QDMA Channel 4 Mapping to PaRAM Register
0x01C0 0214	QCHMAP5	QDMA Channel 5 Mapping to PaRAM Register
0x01C0 0218	QCHMAP6	QDMA Channel 6 Mapping to PaRAM Register
0x01C0 021C	QCHMAP7	QDMA Channel 7 Mapping to PaRAM Register
0x01C0 0220 - 0x01C0 023F	–	Reserved
0x01C0 0240	DMAQNUM0	DMA Queue Number Register 0 (Channels 00 to 07)
0x01C0 0244	DMAQNUM1	DMA Queue Number Register 1 (Channels 08 to 15)
0x01C0 0248	DMAQNUM2	DMA Queue Number Register 2 (Channels 16 to 23)
0x01C0 024C	DMAQNUM3	DMA Queue Number Register 3 (Channels 24 to 31)
0x01C0 0250	DMAQNUM4	DMA Queue Number Register 4 (Channels 32 to 39)
0x01C0 0254	DMAQNUM5	DMA Queue Number Register 5 (Channels 40 to 47)
0x01C0 0258	DMAQNUM6	DMA Queue Number Register 6 (Channels 48 to 55)
0x01C0 025C	DMAQNUM7	DMA Queue Number Register 7 (Channels 56 to 63)
0x01C0 0260	QDMAQNUM	CC QDMA Queue Number
0x01C0 0264 - 0x01C0 0283	–	Reserved
0x01C0 0284	QUEPRI	Queue Priority Register
0x01C0 0288 - 0x01C0 02FF	–	Reserved

Copyright © 2007–2012, Texas Instruments Incorporated

Table 7-17. DM6467 EDMA Registers (continued)

HEX ADDRESS RANGE	ACRONYM	REGISTER NAME
0x01C0 0300	EMR	Event Missed Register
0x01C0 0304	EMRH	Event Missed Register High
0x01C0 0308	EMCR	Event Missed Clear Register
0x01C0 030C	EMCRH	Event Missed Clear Register High
0x01C0 0310	QEMR	QDMA Event Missed Register
0x01C0 0314	QEMCR	QDMA Event Missed Clear Register
0x01C0 0318	CCERR	EDMA3CC Error Register
0x01C0 031C	CCERRCLR	EDMA3CC Error Clear Register
0x01C0 0320	EEVAL	Error Evaluate Register
0x01C0 0324 - 0x01C0 033F	–	Reserved
0x01C0 0340	DRAE0	DMA Region Access Enable Register for Region 0
0x01C0 0344	DRAEH0	DMA Region Access Enable Register High for Region 0
0x01C0 0348	DRAE1	DMA Region Access Enable Register for Region 1
0x01C0 034C	DRAEH1	DMA Region Access Enable Register High for Region 1
0x01C0 0350- 0x01C0 035F	–	Reserved
0x01C0 0360	DRAE4	DMA Region Access Enable Register for Region 4
0x01C0 0364	DRAEH4	DMA Region Access Enable Register High for Region 4
0x01C0 0368	DRAE5	DMA Region Access Enable Register for Region 5
0x01C0 036C	DRAEH5	DMA Region Access Enable Register High for Region 5
0x01C0 0370	DRAE6	DMA Region Access Enable Register for Region 6
0x01C0 0374	DRAEH6	DMA Region Access Enable Register High for Region 6
0x01C0 0378	DRAE7	DMA Region Access Enable Register for Region 7
0x01C0 037C	DRAEH7	DMA Region Access Enable Register High for Region 7
0x01C0 0380	QRAE0	QDMA Region Access Enable Register for Region 0
0x01C0 0384	QRAE1	QDMA Region Access Enable Register for Region 1
0x01C0 0388 - 0x01C0 038F	–	Reserved
0x01C0 0390	QRAE4	QDMA Region Access Enable Register for Region 4
0x01C0 0394	QRAE5	QDMA Region Access Enable Register for Region 5
0x01C0 0398	QRAE6	QDMA Region Access Enable Register for Region 6
0x01C0 039C	QRAE7	QDMA Region Access Enable Register for Region 7
0x01C0 03A0 - 0x01C0 03FF	–	Reserved
0x01C0 0400	Q0E0	Event Q0 Entry 0 Register
0x01C0 0404	Q0E1	Event Q0 Entry 1 Register
0x01C0 0408	Q0E2	Event Q0 Entry 2 Register
0x01C0 040C	Q0E3	Event Q0 Entry 3 Register
0x01C0 0410	Q0E4	Event Q0 Entry 4 Register
0x01C0 0414	Q0E5	Event Q0 Entry 5 Register
0x01C0 0418	Q0E6	Event Q0 Entry 6 Register
0x01C0 041C	Q0E7	Event Q0 Entry 7 Register
0x01C0 0420	Q0E8	Event Q0 Entry 8 Register
0x01C0 0424	Q0E9	Event Q0 Entry 9 Register
0x01C0 0428	Q0E10	Event Q0 Entry 10 Register
0x01C0 042C	Q0E11	Event Q0 Entry 11 Register
0x01C0 0430	Q0E12	Event Q0 Entry 12 Register
0x01C0 0434	Q0E13	Event Q0 Entry 13 Register
0x01C0 0438	Q0E14	Event Q0 Entry 14 Register
0x01C0 043C	Q0E15	Event Q0 Entry 15 Register

Copyright © 2007–2012, Texas Instruments Incorporated

Table 7-17. DM6467 EDMA Registers (continued)

HEX ADDRESS RANGE	ACRONYM	REGISTER NAME
0x01C0 0440	Q1E0	Event Q1 Entry 0 Register
0x01C0 0444	Q1E1	Event Q1 Entry 1 Register
0x01C0 0448	Q1E2	Event Q1 Entry 2 Register
0x01C0 044C	Q1E3	Event Q1 Entry 3 Register
0x01C0 0450	Q1E4	Event Q1 Entry 4 Register
0x01C0 0454	Q1E5	Event Q1 Entry 5 Register
0x01C0 0458	Q1E6	Event Q1 Entry 6 Register
0x01C0 045C	Q1E7	Event Q1 Entry 7 Register
0x01C0 0460	Q1E8	Event Q1 Entry 8 Register
0x01C0 0464	Q1E9	Event Q1 Entry 9 Register
0x01C0 0468	Q1E10	Event Q1 Entry 10 Register
0x01C0 046C	Q1E11	Event Q1 Entry 11 Register
0x01C0 0470	Q1E12	Event Q1 Entry 12 Register
0x01C0 0474	Q1E13	Event Q1 Entry 13 Register
0x01C0 0478	Q1E14	Event Q1 Entry 14 Register
0x01C0 047C	Q1E15	Event Q1 Entry 15 Register
0x01C0 0480	Q2E0	Event Q2 Entry 0 Register
0x01C0 0484	Q2E1	Event Q2 Entry 1 Register
0x01C0 0488	Q2E2	Event Q2 Entry 2 Register
0x01C0 048C	Q2E3	Event Q2 Entry 3 Register
0x01C0 0490	Q2E4	Event Q2 Entry 4 Register
0x01C0 0494	Q2E5	Event Q2 Entry 5 Register
0x01C0 0498	Q2E6	Event Q2 Entry 6 Register
0x01C0 049C	Q2E7	Event Q2 Entry 7 Register
0x01C0 04A0	Q2E8	Event Q2 Entry 8 Register
0x01C0 04A4	Q2E9	Event Q2 Entry 9 Register
0x01C0 04A8	Q2E10	Event Q2 Entry 10 Register
0x01C0 04AC	Q2E11	Event Q2 Entry 11 Register
0x01C0 04B0	Q2E12	Event Q2 Entry 12 Register
0x01C0 04B4	Q2E13	Event Q2 Entry 13 Register
0x01C0 04B8	Q2E14	Event Q2 Entry 14 Register
0x01C0 04BC	Q2E15	Event Q2 Entry 15 Register
0x01C0 04C0	Q3E0	Event Q3 Entry 0 Register
0x01C0 04C4	Q3E1	Event Q3 Entry 1 Register
0x01C0 04C8	Q3E2	Event Q3 Entry 2 Register
0x01C0 04CC	Q3E3	Event Q3 Entry 3 Register
0x01C0 04D0	Q3E4	Event Q3 Entry 4 Register
0x01C0 04D4	Q3E5	Event Q3 Entry 5 Register
0x01C0 04D8	Q3E6	Event Q3 Entry 6 Register
0x01C0 04DC	Q3E7	Event Q3 Entry 7 Register
0x01C0 04E0	Q3E8	Event Q3 Entry 8 Register
0x01C0 04E4	Q3E9	Event Q3 Entry 9 Register
0x01C0 04E8	Q3E10	Event Q3 Entry 10 Register
0x01C0 04EC	Q3E11	Event Q3 Entry 11 Register
0x01C0 04F0	Q3E12	Event Q3 Entry 12 Register
0x01C0 04F4	Q3E13	Event Q3 Entry 13 Register
0x01C0 04F8	Q3E14	Event Q3 Entry 14 Register

Copyright © 2007–2012, Texas Instruments Incorporated

Table 7-17. DM6467 EDMA Registers (continued)

HEX ADDRESS RANGE	ACRONYM	REGISTER NAME
0x01C0 04FC	Q3E15	Event Q3 Entry 15 Register
0x01C0 0500 - 0x01C0 05FF	–	Reserved
0x01C0 0600	QSTAT0	Queue 0 Status Register
0x01C0 0604	QSTAT1	Queue 1 Status Register
0x01C0 0608	QSTAT2	Queue 2 Status Register
0x01C0 060C	QSTAT3	Queue 3 Status Register
0x01C0 0610 - 0x01C0 061F	–	Reserved
0x01C0 0620	QWMTHRA	Queue Watermark Threshold A Register for Q[3:0]
0x01C0 0624 - 0x01C0 063F	–	Reserved
0x01C0 0640	CCSTAT	EDMA3CC Status Register
0x01C0 0644 - 0x01C0 0FFF	–	Reserved
Global Channel Registers		
0x01C0 1000	ER	Event Register
0x01C0 1004	ERH	Event Register High
0x01C0 1008	ECR	Event Clear Register
0x01C0 100C	ECRH	Event Clear Register High
0x01C0 1010	ESR	Event Set Register
0x01C0 1014	ESRH	Event Set Register High
0x01C0 1018	CER	Chained Event Register
0x01C0 101C	CERH	Chained Event Register High
0x01C0 1020	EER	Event Enable Register
0x01C0 1024	EERH	Event Enable Register High
0x01C0 1028	EECR	Event Enable Clear Register
0x01C0 102C	EECRH	Event Enable Clear Register High
0x01C0 1030	EESR	Event Enable Set Register
0x01C0 1034	EESRH	Event Enable Set Register High
0x01C0 1038	SER	Secondary Event Register
0x01C0 103C	SERH	Secondary Event Register High
0x01C0 1040	SECR	Secondary Event Clear Register
0x01C0 1044	SECRH	Secondary Event Clear Register High
0x01C0 1048 - 0x01C0 104F	–	Reserved
0x01C0 1050	IER	Interrupt Enable Register
0x01C0 1054	IERH	Interrupt Enable Register High
0x01C0 1058	IECR	Interrupt Enable Clear Register
0x01C0 105C	IECRH	Interrupt Enable Clear Register High
0x01C0 1060	IESR	Interrupt Enable Set Register
0x01C0 1064	IESRH	Interrupt Enable Set Register High
0x01C0 1068	IPR	Interrupt Pending Register
0x01C0 106C	IPRH	Interrupt Pending Register High
0x01C0 1070	ICR	Interrupt Clear Register
0x01C0 1074	ICRH	Interrupt Clear Register High
0x01C0 1078	IEVAL	Interrupt Evaluate Register
0x01C0 107C - 0x01C0 107F	–	Reserved
0x01C0 1080	QER	QDMA Event Register
0x01C0 1084	QEER	QDMA Event Enable Register
0x01C0 1088	QEECR	QDMA Event Enable Clear Register
0x01C0 108C	QEESR	QDMA Event Enable Set Register

Copyright © 2007–2012, Texas Instruments Incorporated

Table 7-17. DM6467 EDMA Registers (continued)

HEX ADDRESS RANGE	ACRONYM	REGISTER NAME
0x01C0 1090	QSER	QDMA Secondary Event Register
0x01C0 1094	QSECR	QDMA Secondary Event Clear Register
0x01C0 1098 - 0x01C0 1FFF	–	Reserved
Shadow Region 0 Channel Registers		
0x01C0 2000	ER	Event Register
0x01C0 2004	ERH	Event Register High
0x01C0 2008	ECR	Event Clear Register
0x01C0 200C	ECRH	Event Clear Register High
0x01C0 2010	ESR	Event Set Register
0x01C0 2014	ESRH	Event Set Register High
0x01C0 2018	CER	Chained Event Register
0x01C0 201C	CERH	Chained Event Register High
0x01C0 2020	EER	Event Enable Register
0x01C0 2024	EERH	Event Enable Register High
0x01C0 2028	EECR	Event Enable Clear Register
0x01C0 202C	EECRH	Event Enable Clear Register High
0x01C0 2030	EESR	Event Enable Set Register
0x01C0 2034	EESRH	Event Enable Set Register High
0x01C0 2038	SER	Secondary Event Register
0x01C0 203C	SERH	Secondary Event Register High
0x01C0 2040	SECR	Secondary Event Clear Register
0x01C0 2044	SECRH	Secondary Event Clear Register High
0x01C0 2048 - 0x01C0 204F	–	Reserved
0x01C0 2050	IER	Interrupt Enable Register
0x01C0 2054	IERH	Interrupt Enable Register High
0x01C0 2058	IECR	Interrupt Enable Clear Register
0x01C0 205C	IECRH	Interrupt Enable Clear Register High
0x01C0 2060	IESR	Interrupt Enable Set Register
0x01C0 2064	IESRH	Interrupt Enable Set Register High
0x01C0 2068	IPR	Interrupt Pending Register
0x01C0 206C	IPRH	Interrupt Pending Register High
0x01C0 2070	ICR	Interrupt Clear Register
0x01C0 2074	ICRH	Interrupt Clear Register High
0x01C0 2078	IEVAL	Interrupt Evaluate Register
0x01C0 207C - 0x01C0 207F	–	Reserved
0x01C0 2080	QER	QDMA Event Register
0x01C0 2084	QEER	QDMA Event Enable Register
0x01C0 2088	QEECR	QDMA Event Enable Clear Register
0x01C0 208C	QEESR	QDMA Event Enable Set Register
0x01C0 2090	QSER	QDMA Secondary Event Register
0x01C0 2094	QSECR	QDMA Secondary Event Clear Register
0x01C0 2098 - 0x01C0 21FF	–	Reserved
Shadow Region 1 Channel Registers		
0x01C0 2200	ER	Event Register
0x01C0 2204	ERH	Event Register High
0x01C0 2208	ECR	Event Clear Register
0x01C0 220C	ECRH	Event Clear Register High

Copyright © 2007–2012, Texas Instruments Incorporated

Table 7-17. DM6467 EDMA Registers (continued)

HEX ADDRESS RANGE	ACRONYM	REGISTER NAME
0x01C0 2210	ESR	Event Set Register
0x01C0 2214	ESRH	Event Set Register High
0x01C0 2218	CER	Chained Event Register
0x01C0 221C	CERH	Chained Event Register High
0x01C0 2220	EER	Event Enable Register
0x01C0 2224	EERH	Event Enable Register High
0x01C0 2228	EECR	Event Enable Clear Register
0x01C0 222C	EECRH	Event Enable Clear Register High
0x01C0 2230	EESR	Event Enable Set Register
0x01C0 2234	EESRH	Event Enable Set Register High
0x01C0 2238	SER	Secondary Event Register
0x01C0 223C	SERH	Secondary Event Register High
0x01C0 2240	SECR	Secondary Event Clear Register
0x01C0 2244	SECRH	Secondary Event Clear Register High
0x01C0 2248 - 0x01C0 224F	–	Reserved
0x01C0 2250	IER	Interrupt Enable Register
0x01C0 2254	IERH	Interrupt Enable Register High
0x01C0 2258	IECR	Interrupt Enable Clear Register
0x01C0 225C	IECRH	Interrupt Enable Clear Register High
0x01C0 2260	IESR	Interrupt Enable Set Register
0x01C0 2264	IESRH	Interrupt Enable Set Register High
0x01C0 2268	IPR	Interrupt Pending Register
0x01C0 226C	IPRH	Interrupt Pending Register High
0x01C0 2270	ICR	Interrupt Clear Register
0x01C0 2274	ICRH	Interrupt Clear Register High
0x01C0 2278	IEVAL	Interrupt Evaluate Register
0x01C0 227C - 0x01C0 227F	–	Reserved
0x01C0 2280	QER	QDMA Event Register
0x01C0 2284	QEER	QDMA Event Enable Register
0x01C0 2288	QEECR	QDMA Event Enable Clear Register
0x01C0 228C	QEESR	QDMA Event Enable Set Register
0x01C0 2290	QSER	QDMA Secondary Event Register
0x01C0 2294	QSECR	QDMA Secondary Event Clear Register
0x01C0 2298 - 0x01C0 23FF	–	Reserved
0x01C0 2400 - 0x01C0 25FF	–	Reserved
0x01C0 2600 - 0x01C0 27FF	–	Reserved
Shadow Region 4 Channel Registers		
0x01C0 2800	ER	Event Register
0x01C0 2804	ERH	Event Register High
0x01C0 2808	ECR	Event Clear Register
0x01C0 280C	ECRH	Event Clear Register High
0x01C0 2810	ESR	Event Set Register
0x01C0 2814	ESRH	Event Set Register High
0x01C0 2818	CER	Chained Event Register
0x01C0 281C	CERH	Chained Event Register High
0x01C0 2820	EER	Event Enable Register
0x01C0 2824	EERH	Event Enable Register High

Copyright © 2007–2012, Texas Instruments Incorporated

Table 7-17. DM6467 EDMA Registers (continued)

HEX ADDRESS RANGE	ACRONYM	REGISTER NAME
0x01C0 2828	EECR	Event Enable Clear Register
0x01C0 282C	EECRH	Event Enable Clear Register High
0x01C0 2830	EESR	Event Enable Set Register
0x01C0 2834	EESRH	Event Enable Set Register High
0x01C0 2838	SER	Secondary Event Register
0x01C0 283C	SERH	Secondary Event Register High
0x01C0 2840	SECR	Secondary Event Clear Register
0x01C0 2844	SECRH	Secondary Event Clear Register High
0x01C0 2848 - 0x01C0 284F	–	Reserved
0x01C0 2850	IER	Interrupt Enable Register
0x01C0 2854	IERH	Interrupt Enable Register High
0x01C0 2858	IECR	Interrupt Enable Clear Register
0x01C0 285C	IECRH	Interrupt Enable Clear Register High
0x01C0 2860	IESR	Interrupt Enable Set Register
0x01C0 2864	IESRH	Interrupt Enable Set Register High
0x01C0 2868	IPR	Interrupt Pending Register
0x01C0 286C	IPRH	Interrupt Pending Register High
0x01C0 2870	ICR	Interrupt Clear Register
0x01C0 2874	ICRH	Interrupt Clear Register High
0x01C0 2878	IEVAL	Interrupt Evaluate Register
0x01C0 287C - 0x01C0 287F	–	Reserved
0x01C0 2880	QER	QDMA Event Register
0x01C0 2884	QEER	QDMA Event Enable Register
0x01C0 2888	QEECR	QDMA Event Enable Clear Register
0x01C0 288C	QEESR	QDMA Event Enable Set Register
0x01C0 2890	QSER	QDMA Secondary Event Register
0x01C0 2894	QSECR	QDMA Secondary Event Clear Register
0x01C0 2898 - 0x01C0 29FF	–	Reserved
Shadow Region 5 Channel Registers		
0x01C0 2A00	ER	Event Register
0x01C0 2A04	ERH	Event Register High
0x01C0 2A08	ECR	Event Clear Register
0x01C0 2A0C	ECRH	Event Clear Register High
0x01C0 2A10	ESR	Event Set Register
0x01C0 2A14	ESRH	Event Set Register High
0x01C0 2A18	CER	Chained Event Register
0x01C0 2A1C	CERH	Chained Event Register High
0x01C0 2A20	EER	Event Enable Register
0x01C0 2A24	EERH	Event Enable Register High
0x01C0 2A28	EECR	Event Enable Clear Register
0x01C0 2A2C	EECRH	Event Enable Clear Register High
0x01C0 2A30	EESR	Event Enable Set Register
0x01C0 2A34	EESRH	Event Enable Set Register High
0x01C0 2A38	SER	Secondary Event Register
0x01C0 2A3C	SERH	Secondary Event Register High
0x01C0 2A40	SECR	Secondary Event Clear Register
0x01C0 2A44	SECRH	Secondary Event Clear Register High

Copyright © 2007–2012, Texas Instruments Incorporated

Table 7-17. DM6467 EDMA Registers (continued)

HEX ADDRESS RANGE	ACRONYM	REGISTER NAME
0x01C0 2A48 - 0x01C0 2A4F	–	Reserved
0x01C0 2A50	IER	Interrupt Enable Register
0x01C0 2A54	IERH	Interrupt Enable Register High
0x01C0 2A58	IECR	Interrupt Enable Clear Register
0x01C0 2A5C	IECRH	Interrupt Enable Clear Register High
0x01C0 2A60	IESR	Interrupt Enable Set Register
0x01C0 2A64	IESRH	Interrupt Enable Set Register High
0x01C0 2A68	IPR	Interrupt Pending Register
0x01C0 2A6C	IPRH	Interrupt Pending Register High
0x01C0 2A70	ICR	Interrupt Clear Register
0x01C0 2A74	ICRH	Interrupt Clear Register High
0x01C0 2A78	IEVAL	Interrupt Evaluate Register
0x01C0 2A7C - 0x01C0 2A7F	–	Reserved
0x01C0 2A80	QER	QDMA Event Register
0x01C0 2A84	QEER	QDMA Event Enable Register
0x01C0 2A88	QEECR	QDMA Event Enable Clear Register
0x01C0 2A8C	QEESR	QDMA Event Enable Set Register
0x01C0 2A90	QSER	QDMA Secondary Event Register
0x01C0 2A94	QSECR	QDMA Secondary Event Clear Register
0x01C0 2A98 - 0x01C0 2BFF	–	Reserved
Shadow Region 6 Channel Registers		
0x01C0 2C00	ER	Event Register
0x01C0 2C04	ERH	Event Register High
0x01C0 2C08	ECR	Event Clear Register
0x01C0 2C0C	ECRH	Event Clear Register High
0x01C0 2C10	ESR	Event Set Register
0x01C0 2C14	ESRH	Event Set Register High
0x01C0 2C18	CER	Chained Event Register
0x01C0 2C1C	CERH	Chained Event Register High
0x01C0 2C20	EER	Event Enable Register
0x01C0 2C24	EERH	Event Enable Register High
0x01C0 2C28	EECR	Event Enable Clear Register
0x01C0 2C2C	EECRH	Event Enable Clear Register High
0x01C0 2C30	EESR	Event Enable Set Register
0x01C0 2C34	EESRH	Event Enable Set Register High
0x01C0 2C38	SER	Secondary Event Register
0x01C0 2C3C	SERH	Secondary Event Register High
0x01C0 2C40	SECR	Secondary Event Clear Register
0x01C0 2C44	SECRH	Secondary Event Clear Register High
0x01C0 2C48 - 0x01C0 2C4F	–	Reserved
0x01C0 2C50	IER	Interrupt Enable Register
0x01C0 2C54	IERH	Interrupt Enable Register High
0x01C0 2C58	IECR	Interrupt Enable Clear Register
0x01C0 2C5C	IECRH	Interrupt Enable Clear Register High
0x01C0 2C60	IESR	Interrupt Enable Set Register
0x01C0 2C64	IESRH	Interrupt Enable Set Register High
0x01C0 2C68	IPR	Interrupt Pending Register

Copyright © 2007–2012, Texas Instruments Incorporated

Table 7-17. DM6467 EDMA Registers (continued)

HEX ADDRESS RANGE	ACRONYM	REGISTER NAME
0x01C0 2C6C	IPRH	Interrupt Pending Register High
0x01C0 2C70	ICR	Interrupt Clear Register
0x01C0 2C74	ICRH	Interrupt Clear Register High
0x01C0 2C78	IEVAL	Interrupt Evaluate Register
0x01C0 2C7C - 0x01C0 2C7F	–	Reserved
0x01C0 2C80	QER	QDMA Event Register
0x01C0 2C84	QEER	QDMA Event Enable Register
0x01C0 2C88	QEECR	QDMA Event Enable Clear Register
0x01C0 2C8C	QEESR	QDMA Event Enable Set Register
0x01C0 2C90	QSER	QDMA Secondary Event Register
0x01C0 2C94	QSECR	QDMA Secondary Event Clear Register
0x01C0 2C98 - 0x01C0 2DFF	–	Reserved
Shadow Region 7 Channel Registers		
0x01C0 2E00	ER	Event Register
0x01C0 2E04	ERH	Event Register High
0x01C0 2E08	ECR	Event Clear Register
0x01C0 2E0C	ECRH	Event Clear Register High
0x01C0 2E10	ESR	Event Set Register
0x01C0 2E14	ESRH	Event Set Register High
0x01C0 2E18	CER	Chained Event Register
0x01C0 2E1C	CERH	Chained Event Register High
0x01C0 2E20	EER	Event Enable Register
0x01C0 2E24	EERH	Event Enable Register High
0x01C0 2E28	EECR	Event Enable Clear Register
0x01C0 2E2C	EECRH	Event Enable Clear Register High
0x01C0 2E30	EESR	Event Enable Set Register
0x01C0 2E34	EESRH	Event Enable Set Register High
0x01C0 2E38	SER	Secondary Event Register
0x01C0 2E3C	SERH	Secondary Event Register High
0x01C0 2E40	SECR	Secondary Event Clear Register
0x01C0 2E44	SECRH	Secondary Event Clear Register High
0x01C0 2E48 - 0x01C0 2E4F	–	Reserved
0x01C0 2E50	IER	Interrupt Enable Register
0x01C0 2E54	IERH	Interrupt Enable Register High
0x01C0 2E58	IECR	Interrupt Enable Clear Register
0x01C0 2E5C	IECRH	Interrupt Enable Clear Register High
0x01C0 2E60	IESR	Interrupt Enable Set Register
0x01C0 2E64	IESRH	Interrupt Enable Set Register High
0x01C0 2E68	IPR	Interrupt Pending Register
0x01C0 2E6C	IPRH	Interrupt Pending Register High
0x01C0 2E70	ICR	Interrupt Clear Register
0x01C0 2E74	ICRH	Interrupt Clear Register High
0x01C0 2E78	IEVAL	Interrupt Evaluate Register
0x01C0 2E7C - 0x01C0 2E7F	–	Reserved
0x01C0 2E80	QER	QDMA Event Register
0x01C0 2E84	QEER	QDMA Event Enable Register
0x01C0 2E88	QEECR	QDMA Event Enable Clear Register

Copyright © 2007–2012, Texas Instruments Incorporated

Table 7-17. DM6467 EDMA Registers (continued)

HEX ADDRESS RANGE	ACRONYM	REGISTER NAME
0x01C0 2E8C	QEESR	QDMA Event Enable Set Register
0x01C0 2E90	QSER	QDMA Secondary Event Register
0x01C0 2E94	QSECR	QDMA Secondary Event Clear Register
0x01C0 2E98 - 0x01C0 2FFF	–	Reserved
0x01C0 3000 - 0x01C0 3FFF	–	Reserved
0x01C0 4000 - 0x01C0 7FFF	–	Parameter Set RAM (see Table 7-18)
0x01C0 8000 - 0x01C0 FFFF	–	Reserved
Transfer Controller 0 Registers		
0x01C1 0000	PID	Peripheral Identification Register
0x01C1 0004	TCCFG	EDMA3 TC0 Configuration Register
0x01C1 0008 - 0x01C1 00FF	–	Reserved
0x01C1 0100	TCSTAT	EDMA3 TC0 Channel Status Register
0x01C1 0104 - 0x01C1 0113	–	Reserved
0x01C1 0114 - 0x01C1 011F	–	Reserved
0x01C1 0120	ERRSTAT	EDMA3 TC0 Error Status Register
0x01C1 0124	ERREN	EDMA3 TC0 Error Enable Register
0x01C1 0128	ERRCLR	EDMA3 TC0 Error Clear Register
0x01C1 012C	ERRDET	EDMA3 TC0 Error Details Register
0x01C1 0130	ERRCMD	EDMA3 TC0 Error Interrupt Command Register
0x01C1 0134 - 0x01C1 013F	–	Reserved
0x01C1 0140	RDRATE	EDMA3 TC0 Read Command Rate Register
0x01C1 0144 - 0x01C1 01FF	–	Reserved
0x01C1 0200 - 0x01C1 023F	–	Reserved
0x01C1 0240	SAOPT	EDMA3 TC0 Source Active Options Register
0x01C1 0244	SASRC	EDMA3 TC0 Source Active Source Address Register
0x01C1 0248	SACNT	EDMA3 TC0 Source Active Count Register
0x01C1 024C	SADST	EDMA3 TC0 Source Active Destination Address Register
0x01C1 0250	SABIDX	EDMA3 TC0 Source Active B-Index Register
0x01C1 0254	SAMPPRXY	EDMA3 TC0 Source Active Memory Protection Proxy Register
0x01C1 0258	SACNTRLD	EDMA3 TC0 Source Active Count Reload Register
0x01C1 025C	SASRCBREF	EDMA3 TC0 Source Active Source Address B-Reference Register
0x01C1 0260	SADSTBREF	EDMA3 TC0 Source Active Destination Address B-Reference Register
0x01C1 0264 - 0x01C1 027F	–	Reserved
0x01C1 0280	DFCNTRLD	EDMA3 TC0 Destination FIFO Set Count Reload Register
0x01C1 0284	DFSRCBREF	EDMA3 TC0 Destination FIFO Set Source Address B-Reference Register
0x01C1 0288	DFDSTBREF	EDMA3 TC0 Destination FIFO Set Destination Address B-Reference Register
0x01C1 028C - 0x01C1 02FF	–	Reserved
0x01C1 0300	DFOPT0	EDMA3 TC0 Destination FIFO Options Register 0
0x01C1 0304	DFSRC0	EDMA3 TC0 Destination FIFO Source Address Register 0
0x01C1 0308	DFCNT0	EDMA3 TC0 Destination FIFO Count Register 0
0x01C1 030C	DFDST0	EDMA3 TC0 Destination FIFO Destination Address Register 0
0x01C1 0310	DFBIDX0	EDMA3 TC0 Destination FIFO B-Index Register 0
0x01C1 0314	DFMPPRXY0	EDMA3 TC0 Destination FIFO Memory Protection Proxy Register 0
0x01C1 0318 - 0x01C1 033F	–	Reserved
0x01C1 0340	DFOPT1	EDMA3 TC0 Destination FIFO Options Register 1
0x01C1 0344	DFSRC1	EDMA3 TC0 Destination FIFO Source Address Register 1
0x01C1 0348	DFCNT1	EDMA3 TC0 Destination FIFO Count Register 1

Copyright © 2007–2012, Texas Instruments Incorporated

Table 7-17. DM6467 EDMA Registers (continued)

HEX ADDRESS RANGE	ACRONYM	REGISTER NAME
0x01C1 034C	DFDST1	EDMA3 TC0 Destination FIFO Destination Address Register 1
0x01C1 0350	DFBIDX1	EDMA3 TC0 Destination FIFO B-Index Register 1
0x01C1 0354	DFMPPRXY1	EDMA3 TC0 Destination FIFO Memory Protection Proxy Register 1
0x01C1 0358 - 0x01C1 037F	–	Reserved
0x01C1 0380	DFOPT2	EDMA3 TC0 Destination FIFO Options Register 2
0x01C1 0384	DFSRC2	EDMA3 TC0 Destination FIFO Source Address Register 2
0x01C1 0388	DFCNT2	EDMA3 TC0 Destination FIFO Count Register 2
0x01C1 038C	DFDST2	EDMA3 TC0 Destination FIFO Destination Address Register 2
0x01C1 0390	DFBIDX2	EDMA3 TC0 Destination FIFO B-Index Register 2
0x01C1 0394	DFMPPRXY2	EDMA3 TC0 Destination FIFO Memory Protection Proxy Register 2
0x01C1 0398 - 0x01C1 03BF	–	Reserved
0x01C1 03C0	DFOPT3	EDMA3 TC0 Destination FIFO Options Register 3
0x01C1 03C4	DFSRC3	EDMA3 TC0 Destination FIFO Source Address Register 3
0x01C1 03C8	DFCNT3	EDMA3 TC0 Destination FIFO Count Register 3
0x01C1 03CC	DFDST3	EDMA3 TC0 Destination FIFO Destination Address Register 3
0x01C1 03D0	DFBIDX3	EDMA3 TC0 Destination FIFO B-Index Register 3
0x01C1 03D4	DFMPPRXY3	EDMA3 TC0 Destination FIFO Memory Protection Proxy Register 3
0x01C1 03D8 - 0x01C1 03FF	–	Reserved
Transfer Controller 1 Registers		
0x01C1 0400	PID	Peripheral Identification Register
0x01C1 0404	TCCFG	EDMA3 TC1 Configuration Register
0x01C1 0408 - 0x01C1 04FF	–	Reserved
0x01C1 0500	TCSTAT	EDMA3 TC1 Channel Status Register
0x01C1 0504 - 0x01C1 0513	–	Reserved
0x01C1 0514 - 0x01C1 051F	–	Reserved
0x01C1 0520	ERRSTAT	EDMA3 TC1 Error Status Register
0x01C1 0524	ERREN	EDMA3 TC1 Error Enable Register
0x01C1 0528	ERRCLR	EDMA3 TC1 Error Clear Register
0x01C1 052C	ERRDET	EDMA3 TC1 Error Details Register
0x01C1 0530	ERRCMD	EDMA3 TC1 Error Interrupt Command Register
0x01C1 0534 - 0x01C1 053F	–	Reserved
0x01C1 0540	RDRATE	EDMA3 TC1 Read Command Rate Register
0x01C1 0544 - 0x01C1 05FF	–	Reserved
0x01C1 0600 - 0x01C1 063F	–	Reserved
0x01C1 0640	SAOPT	EDMA3 TC1 Source Active Options Register
0x01C1 0644	SASRC	EDMA3 TC1 Source Active Source Address Register
0x01C1 0648	SACNT	EDMA3 TC1 Source Active Count Register
0x01C1 064C	SADST	EDMA3 TC1 Source Active Destination Address Register
0x01C1 0650	SABIDX	EDMA3 TC1 Source Active B-Index Register
0x01C1 0654	SAMPPRXY	EDMA3 TC1 Source Active Memory Protection Proxy Register
0x01C1 0658	SACNTRLD	EDMA3 TC1 Source Active Count Reload Register
0x01C1 065C	SASRCBREF	EDMA3 TC1 Source Active Source Address B-Reference Register
0x01C1 0660	SADSTBREF	EDMA3 TC1 Source Active Destination Address B-Reference Register
0x01C1 0664 - 0x01C1 067F	–	Reserved
0x01C1 0680	DFCNTRLD	EDMA3 TC1 Destination FIFO Set Count Reload Register
0x01C1 0684	DFSRCBREF	EDMA3 TC1 Destination FIFO Set Source Address B-Reference Register
0x01C1 0688	DFDSTBREF	EDMA3 TC1 Destination FIFO Set Destination Address B-Reference Register

Copyright © 2007–2012, Texas Instruments Incorporated

Table 7-17. DM6467 EDMA Registers (continued)

HEX ADDRESS RANGE	ACRONYM	REGISTER NAME
0x01C1 068C - 0x01C1 06FF	–	Reserved
0x01C1 0700	DFOPT0	EDMA3 TC1 Destination FIFO Options Register 0
0x01C1 0704	DFSRC0	EDMA3 TC1 Destination FIFO Source Address Register 0
0x01C1 0708	DFCNT0	EDMA3 TC1 Destination FIFO Count Register 0
0x01C1 070C	DFDST0	EDMA3 TC1 Destination FIFO Destination Address Register 0
0x01C1 0710	DFBIDX0	EDMA3 TC1 Destination FIFO B-Index Register 0
0x01C1 0714	DFMPPRXY0	EDMA3 TC1 Destination FIFO Memory Protection Proxy Register 0
0x01C1 0718 - 0x01C1 073F	–	Reserved
0x01C1 0740	DFOPT1	EDMA3 TC1 Destination FIFO Options Register 1
0x01C1 0744	DFSRC1	EDMA3 TC1 Destination FIFO Source Address Register 1
0x01C1 0748	DFCNT1	EDMA3 TC1 Destination FIFO Count Register 1
0x01C1 074C	DFDST1	EDMA3 TC1 Destination FIFO Destination Address Register 1
0x01C1 0750	DFBIDX1	EDMA3 TC1 Destination FIFO B-Index Register 1
0x01C1 0754	DFMPPRXY1	EDMA3 TC1 Destination FIFO Memory Protection Proxy Register 1
0x01C1 0758 - 0x01C1 077F	–	Reserved
0x01C1 0780	DFOPT2	EDMA3 TC1 Destination FIFO Options Register 2
0x01C1 0784	DFSRC2	EDMA3 TC1 Destination FIFO Source Address Register 2
0x01C1 0788	DFCNT2	EDMA3 TC1 Destination FIFO Count Register 2
0x01C1 078C	DFDST2	EDMA3 TC1 Destination FIFO Destination Address Register 2
0x01C1 0790	DFBIDX2	EDMA3 TC1 Destination FIFO B-Index Register 2
0x01C1 0794	DFMPPRXY2	EDMA3 TC1 Destination FIFO Memory Protection Proxy Register 2
0x01C1 0798 - 0x01C1 07BF	–	Reserved
0x01C1 07C0	DFOPT3	EDMA3 TC1 Destination FIFO Options Register 3
0x01C1 07C4	DFSRC3	EDMA3 TC1 Destination FIFO Source Address Register 3
0x01C1 07C8	DFCNT3	EDMA3 TC1 Destination FIFO Count Register 3
0x01C1 07CC	DFDST3	EDMA3 TC1 Destination FIFO Destination Address Register 3
0x01C1 07D0	DFBIDX3	EDMA3 TC1 Destination FIFO B-Index Register 3
0x01C1 07D4	DFMPPRXY3	EDMA3 TC1 Destination FIFO Memory Protection Proxy Register 3
0x01C1 07D8 - 0x01C1 07FF	–	Reserved
Transfer Controller 2 Registers		
0x01C1 0800	PID	Peripheral Identification Register
0x01C1 0804	TCCFG	EDMA3 TC2 Configuration Register
0x01C1 0808 - 0x01C1 08FF	–	Reserved
0x01C1 0900	TCSTAT	EDMA3 TC2 Channel Status Register
0x01C1 0904 - 0x01C1 0913	–	Reserved
0x01C1 0914 - 0x01C1 091F	–	Reserved
0x01C1 0920	ERRSTAT	EDMA3 TC2 Error Status Register
0x01C1 0924	ERREN	EDMA3 TC2 Error Enable Register
0x01C1 0928	ERRCLR	EDMA3 TC2 Error Clear Register
0x01C1 092C	ERRDET	EDMA3 TC2 Error Details Register
0x01C1 0930	ERRCMD	EDMA3 TC2 Error Interrupt Command Register
0x01C1 0934 - 0x01C1 093F	–	Reserved
0x01C1 0940	RDRATE	EDMA3 TC2 Read Command Rate Register
0x01C1 0944 - 0x01C1 09FF	–	Reserved
0x01C1 0A00 - 0x01C1 0A3F	–	Reserved
0x01C1 0A40	SAOPT	EDMA3 TC2 Source Active Options Register
0x01C1 0A44	SASRC	EDMA3 TC2 Source Active Source Address Register

Copyright © 2007–2012, Texas Instruments Incorporated

Table 7-17. DM6467 EDMA Registers (continued)

HEX ADDRESS RANGE	ACRONYM	REGISTER NAME
0x01C1 0A48	SACNT	EDMA3 TC2 Source Active Count Register
0x01C1 0A4C	SADST	EDMA3 TC2 Source Active Destination Address Register
0x01C1 0A50	SABIDX	EDMA3 TC2 Source Active B-Index Register
0x01C1 0A54	SAMPPRXY	EDMA3 TC2 Source Active Memory Protection Proxy Register
0x01C1 0A58	SACNTRLD	EDMA3 TC2 Source Active Count Reload Register
0x01C1 0A5C	SASRCBREF	EDMA3 TC2 Source Active Source Address B-Reference Register
0x01C1 0A60	SADSTBREF	EDMA3 TC2 Source Active Destination Address B-Reference Register
0x01C1 0A64 - 0x01C1 0A7F	–	Reserved
0x01C1 0A80	DFCNTRLD	EDMA3 TC2 Destination FIFO Set Count Reload Register
0x01C1 0A84	DFSRCBREF	EDMA3 TC2 Destination FIFO Set Source Address B-Reference Register
0x01C1 0A88	DFDSTBREF	EDMA3 TC2 Destination FIFO Set Destination Address B-Reference Register
0x01C1 0A8C - 0x01C1 0AFF	–	Reserved
0x01C1 0B00	DFOPT0	EDMA3 TC2 Destination FIFO Options Register 0
0x01C1 0B04	DFSRC0	EDMA3 TC2 Destination FIFO Source Address Register 0
0x01C1 0B08	DFCNT0	EDMA3 TC2 Destination FIFO Count Register 0
0x01C1 0B0C	DFDST0	EDMA3 TC2 Destination FIFO Destination Address Register 0
0x01C1 0B10	DFBIDX0	EDMA3 TC2 Destination FIFO B-Index Register 0
0x01C1 0B14	DFMPPRXY0	EDMA3 TC2 Destination FIFO Memory Protection Proxy Register 0
0x01C1 0B18 - 0x01C1 0B3F	–	Reserved
0x01C1 0B40	DFOPT1	EDMA3 TC2 Destination FIFO Options Register 1
0x01C1 0B44	DFSRC1	EDMA3 TC2 Destination FIFO Source Address Register 1
0x01C1 0B48	DFCNT1	EDMA3 TC2 Destination FIFO Count Register 1
0x01C1 0B4C	DFDST1	EDMA3 TC2 Destination FIFO Destination Address Register 1
0x01C1 0B50	DFBIDX1	EDMA3 TC2 Destination FIFO B-Index Register 1
0x01C1 0B54	DFMPPRXY1	EDMA3 TC2 Destination FIFO Memory Protection Proxy Register 1
0x01C1 0B58 - 0x01C1 0B7F	–	Reserved
0x01C1 0B80	DFOPT2	EDMA3 TC2 Destination FIFO Options Register 2
0x01C1 0B84	DFSRC2	EDMA3 TC2 Destination FIFO Source Address Register 2
0x01C1 0B88	DFCNT2	EDMA3 TC2 Destination FIFO Count Register 2
0x01C1 0B8C	DFDST2	EDMA3 TC2 Destination FIFO Destination Address Register 2
0x01C1 0B90	DFBIDX2	EDMA3 TC2 Destination FIFO B-Index Register 2
0x01C1 0B94	DFMPPRXY2	EDMA3 TC2 Destination FIFO Memory Protection Proxy Register 2
0x01C1 0B98 - 0x01C1 0BBF	–	Reserved
0x01C1 0BC0	DFOPT3	EDMA3 TC2 Destination FIFO Options Register 3
0x01C1 0BC4	DFSRC3	EDMA3 TC2 Destination FIFO Source Address Register 3
0x01C1 0BC8	DFCNT3	EDMA3 TC2 Destination FIFO Count Register 3
0x01C1 0BCC	DFDST3	EDMA3 TC2 Destination FIFO Destination Address Register 3
0x01C1 0BD0	DFBIDX3	EDMA3 TC2 Destination FIFO B-Index Register 3
0x01C1 0BD4	DFMPPRXY3	EDMA3 TC2 Destination FIFO Memory Protection Proxy Register 3
0x01C1 0BD8 - 0x01C1 0BFF	–	Reserved
Transfer Controller 3 Registers		
0x01C1 0C00	PID	Peripheral Identification Register
0x01C1 0C04	TCCFG	EDMA3 TC3 Configuration Register
0x01C1 0C08 - 0x01C1 0CFF	–	Reserved
0x01C1 0D00	TCSTAT	EDMA3 TC3 Channel Status Register
0x01C1 0D04 - 0x01C1 0D1F	–	Reserved
0x01C1 0D20	ERRSTAT	EDMA3 TC3 Error Status Register

Copyright © 2007–2012, Texas Instruments Incorporated

Table 7-17. DM6467 EDMA Registers (continued)

HEX ADDRESS RANGE	ACRONYM	REGISTER NAME
0x01C1 0D24	ERREN	EDMA3 TC3 Error Enable Register
0x01C1 0D28	ERRCLR	EDMA3 TC3 Error Clear Register
0x01C1 0D2C	ERRDET	EDMA3 TC3 Error Details Register
0x01C1 0D30	ERRCMD	EDMA3 TC3 Error Interrupt Command Register
0x01C1 0D34 - 0x01C1 0D3F	–	Reserved
0x01C1 0D40	RDRATE	EDMA3 TC3 Read Command Rate Register
0x01C1 0D44 - 0x01C1 0E3F	–	Reserved
0x01C1 0E40	SAOPT	EDMA3 TC3 Source Active Options Register
0x01C1 0E44	SASRC	EDMA3 TC3 Source Active Source Address Register
0x01C1 0E48	SACNT	EDMA3 TC3 Source Active Count Register
0x01C1 0E4C	SADST	EDMA3 TC3 Source Active Destination Address Register
0x01C1 0E50	SABIDX	EDMA3 TC3 Source Active B-Index Register
0x01C1 0E54	SAMPPRXY	EDMA3 TC3 Source Active Memory Protection Proxy Register
0x01C1 0E58	SACNTRLD	EDMA3 TC3 Source Active Count Reload Register
0x01C1 0E5C	SASRCBREF	EDMA3 TC3 Source Active Source Address B-Reference Register
0x01C1 0E60	SADSTBREF	EDMA3 TC3 Source Active Destination Address B-Reference Register
0x01C1 0E64 - 0x01C1 0E7F	–	Reserved
0x01C1 0E80	DFCNTRLD	EDMA3 TC3 Destination FIFO Set Count Reload Register
0x01C1 0E84	DFSRCBREF	EDMA3 TC3 Destination FIFO Set Source Address B-Reference Register
0x01C1 0E88	DFDSTBREF	EDMA3 TC3 Destination FIFO Set Destination Address B-Reference Register
0x01C1 0E8C - 0x01C1 0EFF	–	Reserved
0x01C1 0F00	DFOPT0	EDMA3 TC3 Destination FIFO Options Register 0
0x01C1 0F04	DFSRC0	EDMA3 TC3 Destination FIFO Source Address Register 0
0x01C1 0F08	DFCNT0	EDMA3 TC3 Destination FIFO Count Register 0
0x01C1 0F0C	DFDST0	EDMA3 TC3 Destination FIFO Destination Address Register 0
0x01C1 0F10	DFBIDX0	EDMA3 TC3 Destination FIFO B-Index Register 0
0x01C1 0F14	DFMPPRXY0	EDMA3 TC3 Destination FIFO Memory Protection Proxy Register 0
0x01C1 0F18 - 0x01C1 0F3F	–	Reserved
0x01C1 0F40	DFOPT1	EDMA3 TC3 Destination FIFO Options Register 1
0x01C1 0F44	DFSRC1	EDMA3 TC3 Destination FIFO Source Address Register 1
0x01C1 0F48	DFCNT1	EDMA3 TC3 Destination FIFO Count Register 1
0x01C1 0F4C	DFDST1	EDMA3 TC3 Destination FIFO Destination Address Register 1
0x01C1 0F50	DFBIDX1	EDMA3 TC3 Destination FIFO B-Index Register 1
0x01C1 0F54	DFMPPRXY1	EDMA3 TC3 Destination FIFO Memory Protection Proxy Register 1
0x01C1 0F58 - 0x01C1 0F7F	–	Reserved
0x01C1 0F80	DFOPT2	EDMA3 TC3 Destination FIFO Options Register 2
0x01C1 0F84	DFSRC2	EDMA3 TC3 Destination FIFO Source Address Register 2
0x01C1 0F88	DFCNT2	EDMA3 TC3 Destination FIFO Count Register 2
0x01C1 0F8C	DFDST2	EDMA3 TC3 Destination FIFO Destination Address Register 2
0x01C1 0F90	DFBIDX2	EDMA3 TC3 Destination FIFO B-Index Register 2
0x01C1 0F94	DFMPPRXY2	EDMA3 TC3 Destination FIFO Memory Protection Proxy Register 2
0x01C1 0F98 - 0x01C1 0FBF	–	Reserved
0x01C1 0FC0	DFOPT3	EDMA3 TC3 Destination FIFO Options Register 3
0x01C1 0FC4	DFSRC3	EDMA3 TC3 Destination FIFO Source Address Register 3
0x01C1 0FC8	DFCNT3	EDMA3 TC3 Destination FIFO Count Register 3
0x01C1 0FCC	DFDST3	EDMA3 TC3 Destination FIFO Destination Address Register 3
0x01C1 0FD0	DFBIDX3	EDMA3 TC3 Destination FIFO B-Index Register 3

Copyright © 2007–2012, Texas Instruments Incorporated

Table 7-17. DM6467 EDMA Registers (continued)

HEX ADDRESS RANGE	ACRONYM	REGISTER NAME
0x01C1 0FD4	DFMPPRXY3	EDMA3 TC3 Destination FIFO Memory Protection Proxy Register 3
0x01C1 0FD8 - 0x01C1 0FFF	–	Reserved

Table 7-18 shows an abbreviation of the set of registers which make up the parameter set for each of 512 EDMA events. Each of the parameter register sets consist of 8 32-bit word entries. Table 7-19 shows the parameter set entry registers with relative memory address locations within each of the parameter sets.

Copyright © 2007–2012, Texas Instruments Incorporated

Table 7-18. EDMA Parameter Set RAM

HEX ADDRESS RANGE	DESCRIPTION
0x01C0 4000 - 0x01C0 401F	Parameters Set 0 (8 32-bit words)
0x01C0 4020 - 0x01C0 403F	Parameters Set 1 (8 32-bit words)
0x01C0 4040 - 0x01C0 405F	Parameters Set 2 (8 32-bit words)
0x01C0 4060 - 0x01C0 407F	Parameters Set 3 (8 32-bit words)
0x01C0 4080 - 0x01C0 409F	Parameters Set 4 (8 32-bit words)
0x01C0 40A0 - 0x01C0 40BF	Parameters Set 5 (8 32-bit words)
...	...
0x01C0 7FC0 - 0x01C0 7FDF	Parameters Set 510 (8 32-bit words)
0x01C0 7FE0 - 0x01C0 7FFF	Parameters Set 511 (8 32-bit words)

Table 7-19. Parameter Set Entries

HEX OFFSET ADDRESS WITHIN THE PARAMETER SET	ACRONYM	PARAMETER ENTRY
0x0000	OPT	Option
0x0004	SRC	Source Address
0x0008	A_B_CNT	A Count, B Count
0x000C	DST	Destination Address
0x0010	SRC_DST_BIDX	Source B Index, Destination B Index
0x0014	LINK_BCNTRLD	Link Address, B Count Reload
0x0018	SRC_DST_CIDX	Source C Index, Destination C Index
0x001C	CCNT	C Count

Copyright © 2007–2012, Texas Instruments Incorporated

7.7 Reset

The reset controller detects the different type of resets supported on the DM6467 device and manages the distribution of those resets throughout the device.

The DM6467 device has several types of device-level global resets—power-on reset, warm reset, max reset, and system reset. Table 7-20 explains further the types of reset, the reset initiator, and the effects of each reset on the chip. See Section 7.7.9, *Reset Electrical Data/Timing*, for more information on the effects of each reset on the PLL controllers and their clocks.

Table 7-20. Device-Level Global Reset Types

TYPE	INITIATOR	EFFECT(S)
Power-on Reset (POR)	$\overline{\text{POR}}$ pin	Global chip reset (Cold reset). Activates the POR signal on chip, which resets the entire chip including the emulation logic. The power-on reset ($\overline{\text{POR}}$) pin ***must*** be driven low during power ramp of the device. Device boot and configuration pins are latched.
Warm Reset	$\overline{\text{RESET}}$ pin	Resets everything except for the emulation logic. Emulator stays alive during Warm Reset. Device boot and configuration pins are latched.
Max Reset	Emulator, WD Timer (Timer 2)	Same as a Warm Reset, except the DM6467 device boot and configuration pins are ***not*** re-latched.
System Reset	Emulator	A system reset maintains memory contents and does not reset the test and emulation circuitry. The device boot and configuration pins are also ***not*** re-latched.
C64x+ Local Reset (DSP Reset)	Software (register bit)	MMR controls the C64x+ reset input. This is used for control of C64x+ reset by the ARM. The C64x+ Slave DMA port is still alive when in local reset.

In addition to device-level global resets, the PSC provides the capability to cause local resets to peripherals and/or the C64x+ DSP.

7.7.1 Power-on Reset ($\overline{\text{POR}}$ Pin)

Power-on Reset (POR) is initiated by the $\overline{\text{POR}}$ pin and is used to reset the entire chip, including the test and emulation logic. Power-on Reset is also referred to as a cold reset since the device usually goes through a power-up cycle. During power-up, the $\overline{\text{POR}}$ pin must be asserted (driven low) until the power supplies have reached their normal operating conditions. If an external 27-MHz oscillator is used on the DEV_MXI/DEV_CLKIN pin, the source clock should also be running at the correct frequency prior to de-asserting the $\overline{\text{POR}}$ pin. **Note:** A device power-up cycle is not required to initiate a Power-on Reset.

The following sequence ***must*** be followed during a Power-on Reset.

1. Wait for the power supplies to reach normal operating conditions while keeping the $\overline{\text{POR}}$ pin asserted (driven low).
2. Wait for the input clock source to be stable while keeping the $\overline{\text{POR}}$ pin asserted (low).
3. Once the power supplies and the input clock source are stable, the $\overline{\text{POR}}$ pin ***must*** remain asserted (low) for a minimum of 12 DEV_MXI cycles.

   Within the low period of the $\overline{\text{POR}}$ pin, the following happens:
   - The reset signals flow to the entire chip (including the test and emulation logic), resetting the modules on chip.
   - The PLL Controller clocks start at the frequency of the DEV_MXI clock. The clocks are propagated throughout the chip to reset the chip synchronously. By default, both PLL1 and PLL2 are in reset and unlocked. The PLL Controllers default to PLL Bypass Mode.
4. The $\overline{\text{POR}}$ pin may now be deasserted (driven high).

Copyright © 2007–2012, Texas Instruments Incorporated

When the $\overline{\text{POR}}$ pin is deasserted (high), the configuration pin values are latched and the PLL Controllers changed their system clocks to their default divide-down values. Both PLL Controllers are still in PLL Bypass Mode. Other device initialization also begins.

5. After device initialization is complete, the PLL Controllers pause the system clocks for 10 cycles.

   At this point:
   - The I/O pins are controlled by the default peripherals (default peripherals are determined by PINMUX0 and PINMUX1 registers).
   - The clock and reset of each peripheral is determined by the default settings of the Power and Sleep Controller (PSC).
   - The PLL Controllers are operating in PLL Bypass Mode.
   - The ARM926 begins executing from the default address (either ARM boot ROM or EMIFA).

   After the reset sequence, the boot sequence begins. For more details on the boot sequence, see the Using the *TMS320DM646x Bootloader* Application Report (literature number SPRAAS0).

7.7.1.1 Usage of $\overline{\text{POR}}$ versus $\overline{\text{RESET}}$ Pins

$\overline{\text{POR}}$ and $\overline{\text{RESET}}$ are independent resets.

If the device needs to go through a power-up cycle, $\overline{\text{POR}}$ (*not* $\overline{\text{RESET}}$) ***must*** be used to fully reset the device.

In functional end-system, emulation/debugger logic is typically *not* needed; therefore, the recommendation for functional end-system is to use the $\overline{\text{POR}}$ pin for full device reset. If $\overline{\text{RESET}}$ pin is *not* needed, it can be pulled inactive (high) via an external pullup resistor.

In a debug system, it is typically desirable to allow the reset of the device without crashing an emulation session. In this case, the user can use the $\overline{\text{POR}}$ pin to achieve full device reset and use the $\overline{\text{RESET}}$ pin to achieve a debug reset—which resets the entire device except test and emulation logic.

7.7.1.2 Latching Boot and Configuration Pins

Internal to the chip, the two device reset pins $\overline{\text{RESET}}$ and $\overline{\text{POR}}$ are logically AND'ed together *only* for the purpose of latching device boot and configuration pins. The values on all device and boot configuration pins are latched into the BOOTCFG register when the logical AND of $\overline{\text{RESET}}$ and $\overline{\text{POR}}$ transitions from low to high.

7.7.2 Warm Reset ($\overline{\text{RESET}}$ Pin)

A Warm Reset is activated by driving the $\overline{\text{RESET}}$ pin active-low. This resets everything in the device except the test or emulation logic. An emulator session will stay alive during warm reset.

For more information on $\overline{\text{POR}}$ vs. $\overline{\text{RESET}}$ usage, see Section 7.7.1.1, *Usage of $\overline{\text{POR}}$ versus $\overline{\text{RESET}}$ Pins* and Section 7.7.1.2, *Latching Boot and Configuration Pins*.

The following sequence ***must*** be followed during a Warm Reset:

1. Power supplies and input clock source should already be stable.
2. The $\overline{\text{RESET}}$ pin ***must*** be asserted (low) for a minimum of 12 DEV_MXI cycles.

   Within the low period of the $\overline{\text{RESET}}$ pin, the following happens:
   - The reset signals flow to the entire chip resetting all the modules on chip, except the test and emulation logic.
   - The PLL Controllers are reset thereby, switching back to PLL Bypass Mode and resetting all their registers to default values. Both PLL1 and PLL2 are placed in reset and lose lock.
3. The $\overline{\text{RESET}}$ pin may now be deasserted (driven high).

   When the $\overline{\text{RESET}}$ pin is deasserted (high), the configuration pin values are latched and the PLL Controllers changed their system clocks to their default divide-down values. Both PLL Controllers are still in PLL Bypass Mode. Other device initialization also begins.

Copyright © 2007–2012, Texas Instruments Incorporated

4. After device initialization is complete, the PLL Controllers pause the system clocks for 10 cycles.

   At this point:
   – The I/O pins are controlled by the default peripherals (default peripherals are determined by PINMUX0 and PINMUX1 registers).
   – The clock and reset of each peripheral is determined by the default settings of the Power and Sleep Controller (PSC).
   – The PLL Controllers are operating in PLL Bypass Mode.
   – The ARM926 begins executing from the default address (either ARM boot ROM, TCM RAM, or EMIFA).

After the reset sequence, the boot sequence begins. For more details on the boot sequence, see the Using the *TMS320DM646x Bootloader* Application Report (literature number SPRAAS0).

7.7.3 Maximum Reset

A Maximum (Max) Reset is initiated by the emulator or the watchdog timer (Timer 2). The effects are the same as a warm reset, except the device boot and configuration pins are not re-latched. The emulator initiates a maximum reset via the ICEPICK module. This ICEPICK-initiated reset is non-maskable. When the watchdog timer counter reaches zero, this will also initiate a maximum reset to recover from a runaway condition.

To invoke the maximum reset via the ICEPICK module, the user can perform the following from the Code Composer Studio™ IDE menu: Debug→Advanced Resets→System Reset

This is the Max Reset sequence:

1. Max Reset is initiated by the emulator or the watchdog timer.

   During this time, the following happens:
   – The reset signals flow to the entire chip, resetting all the modules on chip except the test and emulation logic.
   – The PLL Controllers are reset —thereby, switching back to PLL Bypass Mode and resetting all their registers to default values. Both PLL1 and PLL2 are placed in reset and lose lock.
2. After device initialization is complete, the PLL Controllers pause the system clocks for 10 cycles.

   At this point:
   – The I/O pins are controlled by the default peripherals (default peripherals are determined by PINMUX0 and PINMUX1 registers).
   – The clock and reset of each peripheral is determined by the default settings of the Power and Sleep Controller (PSC).
   – The PLL Controllers are operating in PLL Bypass Mode.
   – The ARM926 begins executing from the default address (either ARM boot ROM, TCM RAM, or EMIFA).

After the reset sequence, the boot sequence begins. Since the boot and configuration pins are *not* latched with a Max Reset, the previous values (as shown in the BOOTCFG register) are used to select the boot mode. For more details on the boot sequence, see the Using the *TMS320DM646x Bootloader* Application Report (literature number SPRAAS0).

7.7.4 System Reset

A System Reset is initiated by the emulator. The following memory contents are maintained:

- L1/L2 RAM: The C64x+ L1/L2 RAM content is retained. The L1/L2 cache content is ***not*** retained because tag information is reset.
- DDR2 Memory Controller: The DDR2 Memory Controller registers are ***not*** reset. In addition, the DDR2 SDRAM memory content is retained if the user places the DDR2 SDRAM in self-refresh mode before invoking the System Reset.

Copyright © 2007–2012, Texas Instruments Incorporated

Test, emulation, clock, and power control logic are unaffected. The emulator initiates a System Reset via the C64x+ emulation logic. This reset can be masked by the emulator.

This is the System Reset sequence:

1. The System Reset is initiated by the emulator.

   During this time, the following happens:
   - The reset signals flow to the entire chip resetting all the modules on chip, except the test and emulation logic.
   - The PLL Controllers are ***not*** reset. Internal system clocks are unaffected. If PLL1/PLL2 were locked before the System Reset, they remain locked.
2. After device initialization is complete, the PLL Controllers pause the system clocks for 10 cycles.

   At this point:
   - The I/O pins are controlled by the default peripherals (default peripherals are determined by PINMUX0 and PINMUX1 registers).
   - The clock and reset of each peripheral (except the DDR2 Memory Controller) is determined by the default settings of the Power and Sleep Controller (PSC).
   - The DDR2 Memory Controller registers retain their previous values. Only the DDR2 Memory Controller state machines are reset by the System Reset.
   - The PLL Controllers are operating in the mode prior to System Reset. The System clocks are unaffected.
   - The ARM926 begins executing from the default address (either ARM boot ROM, TCM RAM, or EMIFA).

After the reset sequence, the boot sequence begins. Since the boot and configuration pins are *not* latched with a System Reset, the previous values (as shown in the BOOTCFG register) are used to select the boot mode. For more details on the boot sequence, see the Using the *TMS320DM646x Bootloader* Application Report (literature number SPRAAS0).

7.7.5 C64x+ Local Reset (DSP Local Reset)

With access to the PSC registers, the ARM can perform two types of DSP reset: DSP local reset and DSP module reset. When DSP local reset is asserted, the DSP's internal memories (L1P, L1D, and L2) are still accessible. The local reset only resets the DSP CPU core, not the rest of the DSP subsystem, as the DSP module reset would. Local reset is useful when the DSP module is in the enable state or in the disable state. The DSP module reset takes precedence over local reset. The ARM uses local reset to reset the DSP to initiate the DSP boot process. The intent of module reset is to completely reset the DSP (like hard reset). For more detailed information on DSP local reset and DSP module reset, see the ARM-DSP Integration Chapter in the *TMS320DM646x DMSoC ARM Subsystem* Reference Guide (literature number SPRUEP9).

For information on peripheral selection at the rising edge of $\overline{\text{POR}}$ or $\overline{\text{RESET}}$, see Section 4, *Device Configurations* of this data manual.

7.7.6 Peripheral Local Reset

The user can configure the local reset and clock state of a peripheral through programming the PSC. Table 7-3, DM6467 LPSC Assignments, identifies the LPSC numbers and the peripherals capable of being locally reset by the PSC. For more detailed information on the programming of these peripherals by the PSC, see the *TMS320DM646x DMSoC ARM Subsystem* Reference Guide (literature number SPRUEP9).

7.7.7 Reset Priority

If any of the above reset sources occur simultaneously, the PLLC only processes the highest-priority reset request. The reset request priorities, from high to low, are as follows:

- Power-on Reset

Copyright © 2007–2012, Texas Instruments Incorporated

- Maximum Reset
- Warm Reset
- System Reset

7.7.7.1 Reset Type Status (RSTYPE) Register

The Reset Type Status (RSTYPE) register (0x01C4 08E4) is the only register for the reset controller. This register falls in the same memory range as the PLL1 controller registers (see Table 7-12 for the PLL1 Controller Registers (Including Reset Controller)). For more details on the RSTYPE register and its bit descriptions, see Figure 7-19 and Table 7-21.

31	16
RESERVED	
R-0000 0000 0000 0000	

15	4	3	2	1	0
RESERVED		SRST	MRST	WRST	POR
R-0000 0000 0000		R-0/1	R-0/1	R-0/1	R-0/1

LEGEND: R = Read only; -*n* = value after reset

Figure 7-19. Reset Type Status (RSTYPE) Register [0x01C4 08E4]

Table 7-21. RSTYPE Register Bit Descriptions

BIT	NAME	DESCRIPTION
30:4	RESERVED	Reserved. Read returns "0". Writes have no effect.
3	SRST	System Reset. 0 = System Reset was ***not*** the last reset to occur. 1 = System Reset was the last reset to occur.
2	MRST	Max Reset. 0 = Max Reset was ***not*** the last reset to occur. 1 = Max Reset was the last reset to occur.
1	WRST	Warm Reset. 0 = Warm Reset was ***not*** the last reset to occur. 1 = Warm Reset was the last reset to occur.
0	POR	Power-on Reset. 0 = Power-on Reset was ***not*** the last reset to occur. 1 = Power-on Reset was the last reset to occur.

7.7.8 Pin Behaviors at Reset

During normal operations, pins are controlled by the respective peripheral selected in the PINMUX0 or PINMUX1 register. During device level global reset, the pin behaves as follows:

Multiplexed Boot and Configuration Pins

These pins are forced 3-stated when the device is in reset. This is to ensure the proper boot and configuration values can be latched on these multiplexed pins. This is particularly useful in the case where the boot and configuration values are driven by an external control device. Once the device is out of reset, these pins are controlled by their respective default peripheral.

- **Boot and Configuration Pins Group:** VP_DOUT6/DSPBOOT, VP_DOUT5/PCIEN, VP_DOUT4/CS2BW, VP_DOUT3/BTMODE3, VP_DOUT2/BTMODE2, VP_DOUT1/BTMODE1, and VP_DOUT0/BTMODE0.

For information on whether external pullup/pulldown resistors should be used on the boot and configuration pins, see Section 4.8.1, *Pullup/Pulldown Resistors*.

Copyright © 2007–2012, Texas Instruments Incorporated

Default Power Down Pins

As discussed in Section 4.2, *Power Considerations*, the VDD3P3V_PWDN register controls power to the 3.3-V pins. The VDD3P3V_PWDN register defaults to powering down some 3.3-V pins to save power. For more details on the VDD3P3V_PWDN register and which 3.3-V pins default to power up or power down, see Section 4.2, *Power Considerations*. The pins that default to power down, are both reset to power down and high-impedance. They remain in that state until configured otherwise by VDD3P3_PWDN and PINMUX0/PINMUX1 programming.

- **Default Power Down Pin Group:** USB_DRVVBUS/GP[22], CLKOUT0, SPI_CLK, SPI_EN, SPI_CS0, SPI_CS1, SPI_MISO, SPI_MOSI, VLYNQ_CLOCK, VLYNQ_SCRUN, VLYNQ_TXD[3:0], VLYNQ_RXD[3:0], RFTCLK, GMTCLK, MTXD[7:4], MRXD[7:4], MTCLK, MTXD[3:0], MTXEN, MCOL, MCRS, MRCLK, MRXD[3:0], MRXDV, MRXER, MDCLK, MDIO, ACLKX1, AHCLKX1, AXR1[0], ACLKR0, AHCLKR0, AFSR0, ACLKX0, AHCLKX0, AFSX0, AXR0[3:0], AMUTE0, AMUTEIN0, PCI_CLK/GP[10], PCI_DEVSEL/HCNTL1/EM_BA[1], PCI_FRAME/HINT/EM_BA[0], PCI_IRDY/HRDY/EM_A[17], PCI_TRDY/HHWIL/EM_A[16], PCI_STOP/HCNTL0/EM_WE, PCI_SERR/HDS1/EM_OE, PCI_PERR/HCS/EM_DQM1, PCI_PAR/HAS/EM_DQM0, PCI_INTA/EM_WAIT2, PCI_CBE3/HR/W/EM_CS3, PCI_CBE2/HDS2/EM_CS2, PCI_AD[15:0]/HD[15:0]/EM_D[15:0], PCI_RST/DA2/GP[13]/EM_A[22], PCI_IDSEL/HDDIR/EM_R/W, PCI_REQ/DMARQ/GP[11]/EM_CS5, PCI_GNT/DMACK/GP[12]/EM_CS4, PCI_CBE1/ATA_CS1/GP[32]/EM_A[19], PCI_CBE0/ATA_CS0/GP[33]/EM_A[18], DIOW/GP[20]/EM_WAIT4, IORDY/GP[21]/EM_WAIT3, DIOR/GP[19]/EM_WAIT5, DA1/GP[16]/EM_A[21], DA0/GP[17]/EM_A[20], INTRQ/GP[18]/RSV , PCI_AD[31:16]/DD[15:0]/HD[31:16]/EM_A[15:0], GP[7]/CVDDADJ1, GP[6]/CVDDADJ0, GP[5], GP[4]/STC_CLKIN, GP[3]/AUDIO_CLK0, GP[2]/AUDIO_CLK1, GP[1], GP[0], TOUT2, TINP1L, TOUT1L, TOUT1U, TINP0L, TINP0U, TOUT0L, TOUT0U, PWM1/TS1_DOUT, PWM0/CRG0_PO/TS1_ENAO, URTS2/UIRTX2/TS0_PSTIN/GP[41], UCTS2/USD2/CRG0_VCXI/GP[42]/TS1_PSTO, URXD2/CRG1_VCXI/GP[39]/CRG0_VCXI, UTXD2/URCTX2/CRG1_PO/GP[40]/CRG0_PO, URTS1/UIRTX1/TS0_WAITO/GP[25], UCTS1/USD1/TS0_EN_WAITO/GP[26], URXD1/TS0_DIN7/GP[23], UTXD1/URCTX1/TS0_DOUT7/GP[24], UDTR0/TS0_ENAO/GP[36], UDSR0/TS0_PSTO/GP[37], UDCD0/TS0_WAITIN/GP[38], URIN0/GP[8]/TS1_WAITIN, URXD0/TS1_DIN, UTXD0/URCTX0/TS1_PSTIN, URTS0/UIRTX0/TS1_EN_WAITO, UCTS0/USD0, VP_DOUT15/TS1_DIN, VP_DOUT14/TS1_PSTIN, VP_DOUT13/TS1_EN_WAITO, VP_DOUT12/TS1_WAITO, VP_DOUT11/TS1_DOUT, VP_DOUT10/TS1_PSTO, VP_DOUT9/TS1_ENAO, VP_DOUT8/TS1_WAITIN, VP_CLKIN3/TS1_CLKO, VP_CLKO3/TS0_CLKO, VP_DOUT7/VADJEN, VP_DOUT6/DSPBOOT, VP_DOUT5/PCIEN, VP_DOUT4/CS2BW, VP_DOUT3/BTMODE3, VP_DOUT2/BTMODE2, VP_DOUT1/BTMODE1, VP_DOUT0/BTMODE0, VP_CLKIN2, VP_CLKO2, VP_DIN15_VSYNC/TS0_DIN7, VP_DIN14_HSYNC/TS0_DIN6, VP_DIN13_FIELD/TS0_DIN5, VP_DIN12/TS0_DIN4, VP_DIN11/TS0_DIN3, VP_DIN10/TS0_DIN2, VP_DIN9/TS0_DIN1, VP_DIN8/TS0_DIN0, VP_CLKIN1, VP_DIN7/TS0_DOUT7/TS1_DIN, VP_DIN6/TS0_DOUT6/TS1_PSTIN, VP_DIN5/TS0_DOUT5/TS1_EN_WAITO, VP_DIN4/TS0_DOUT4/TS1_WAITO, VP_DIN3/TS0_DOUT3, VP_DIN2/TS0_DOUT2, VP_DIN1/TS0_DOUT1, VP_DIN0/TS0_DOUT0, VP_CLKIN0.

Copyright © 2007–2012, Texas Instruments Incorporated

All Other Pins

During device reset, all other pins are controlled by the default peripheral. The default peripheral is determined by the default settings of the PINMUX0 or PINMUX1 registers.

Some of the PINMUX0/PINMUX1 settings are determined by configuration pins latched at reset. To determine the reset behavior of these pins, see Section 4.7, *Multiplexed Pin Configurations* and read the rest of the this subsection to understand how that default peripheral controls the pin.

The reset behaviors for all these other pins during all boot modes, ***except PCI Boot***, are categorized as follows (also see Figure 7-20 and Figure 7-21 in Section 7.7.9, *Reset Electrical Data/Timing*):

- **DDR2 Z Group:** DDR_DQS[3:0], DDR_DQS[3:0], DDR_D[31:0], DDR_DQGATE1, DDR_DQGATE3
- **DDR2 Low Group:** DDR_CLK, DDR_CKE, DDR_ODT0, DDR_A[14:0], DDR_DQGATE0, DDR_DQGATE2
- **DDR2 High Group:** DDR_CLK, DDR_CS, DDR_WE, DDR_RAS, DDR_CAS
- **DDR2 Z/High Group:** DDR_DQM[3:0]
- **DDR2 Low/High Group:** DDR_BA[2:0]
- **Z Group:** These pin are 3-stated by default, and these pins remain 3-stated throughout POR or RESET assertion. When POR or RESET is deasserted, these pins remain 3-stated until configured otherwise by their respective peripheral (after the peripheral is enabled by the PSC). PCI_CLK/GP[10], PCI_INTA/EM_WAIT2, DIOW/GP[20]/EM_WAIT4, IORDY/GP[21]/EM_WAIT3, PCI_AD[15:0]/HD[15:0]/EM_D[15:0], RFTCLK, GMTCLK, MTCLK, MTXD[7:0], MTXEN, MCOL, MCRS, MRCLK, MRXD[7:0], MRXDV, MRXER, MDCLK, MDIO, URXD0/TS1_DIN, UTXD0/URCTX0/TS1_PSTIN, URTS0/UIRTX0/TS1_EN_WAITO, UCTS0/USD0, UDTR0/TS0_ENAO/GP[36], UDSR0/TS0_PSTO/GP[37], UDCD0/TS0_WAITIN/GP[38], URIN0/GP[8]/TS1_WAITIN, URXD1/TS0_DIN7/GP[23], UTXD1/URCTX1/TS0_DOUT7/GP[24], URTS1/UIRTX1/TS0_WAITO/GP[25], UCTS1/USD1/TS0_EN_WAITO/GP[26], URXD2/CRG1_VCXI/GP[39]/CRG0_VCXI, UTXD2/URCTX2/CRG1_PO/GP[40]/CRG0_PO, URTS2/UIRTX2/TS0_PSTIN/GP[41], UCTS2/USD2/CRG0_VCXI/GP[42]/TS1_PSTO, ACLKR0, AHCLKR0, AFSR0, ACLKX0, AHCLKX0, AFSX0, AXR0[3:0], AMUTE0, AMUTEIN0, ACLKX1, AHCLKX1, AXR1[0], SCL, SDA, SPI_CLK, SPI_EN, SPI_CS0, SPI_CS1, SPI_MISO, SPI_MOSI, PWM0/CRG0_PO/TS1_ENAO, PWM1/TS1_DOUT, VLYNQ_CLOCK, VLYNQ_SCRUN, VLYNQ_TXD[3:0], VLYNQ_RXD[3:0], USB_DRVVBUS/GP[22], TINP0L, TINP0U, TOUT0L, TOUT0U, TINP1L, TOUT1L, TOUT1U, TOUT2, TS0_CLKIN, TS1_CLKIN, VP_CLKIN0, VP_CLKIN1, VP_DIN15_VSYNC/TS0_DIN7, VP_DIN14_HSYNC/TS0_DIN6, VP_DIN13_FIELD/TS0_DIN5, VP_DIN12/TS0_DIN4, VP_DIN11/TS0_DIN3, VP_DIN10/TS0_DIN2, VP_DIN9/TS0_DIN1, VP_DIN8/TS0_DIN0, VP_DIN7/TS0_DOUT7/TS1_DIN, VP_DIN6/TS0_DOUT6/TS1_PSTIN, VP_DIN5/TS0_DOUT5/TS1_EN_WAITO, VP_DIN4/TS0_DOUT4/TS1_WAITO, VP_DIN3/TS0_DOUT3, VP_DIN2/TS0_DOUT2, VP_DIN1/TS0_DOUT1, VP_DIN0/TS0_DOUT0, VP_CLKIN2, VP_CLKIN3/TS1_CLKO, VP_CLKO2, VP_CLKO3/TS0_CLKO, VP_DOUT15/TS1_DIN, VP_DOUT14/TS1_PSTIN, VP_DOUT13/TS1_EN_WAITO, VP_DOUT12/TS1_WAITO, VP_DOUT11/TS1_DOUT, VP_DOUT10/TS1_PSTO, VP_DOUT9/TS1_ENAO, VP_DOUT8/TS1_WAITIN, VP_DOUT7/VADJEN, GP[0], GP[1], GP[2]/AUDIO_CLK1, GP[3]/AUDIO_CLK0, GP[4]/STC_CLKIN, GP[5], GP[6]/CVDDADJ0, GP[7]/CVDDADJ1, TIMS, TDO, TDI, TCK, TRST, EMU1, EMU0, DEV_MXI/DEV_CLKIN, AUX_MXI/AUX_CLKIN
- **Low Group:** These pins are low by default, and remain low until configured otherwise by their respective peripheral (after the peripheral is enabled by the PSC). PCI_RST/DA2/GP[13]/EM_A[22], PCI_IDSEL/HDDIR/EM_R/W, PCI_IRDY/HRDY/EM_A[17], PCI_TRDY/HHWIL/EM_A[16], PCI_CBE1/ATA_CS1/GP[32]/EM_A[19], PCI_CBE0/ATA_CS0/GP[33]/EM_A[18], PCI_AD[31:16]/DD[15:0]/HD[31:16]/EM_A[15:0], CLKOUT0, RTCLK,

Copyright © 2007–2012, Texas Instruments Incorporated

- **High Group:** These pins are high by default, and remain high until configured otherwise by their respective peripheral (after the peripheral is enabled by the PSC). PCI_DEVSEL/HCNTL1/EM_BA[1], PCI_FRAME/HINT/EM_BA[0], PCI_STOP/HCNTL0/EM_WE, PCI_SERR/HDS1/EM_OE, PCI_PERR/HCS/EM_DQM1, PCI_PAR/HAS/EM_DQM0, PCI_REQ/DMARQ/GP[11]/EM_CS5, PCI_GNT/DMACK/GP[12]/EM_CS4, PCI_CBE3/HR/W/EM_CS3, PCI_CBE2/HDS2/EM_CS2,

NOTE: For **PCI boot mode**, all PCI pins now behave according to Z Group.

For more information on the pin behaviors during device-level global reset, see Figure 7-20 and Figure 7-21 in Section 7.7.9, *Reset Electrical Data/Timing*.

7.7.9 Reset Electrical Data/Timing

Note: If a configuration pin ***must*** be routed out from the device, the internal pullup/pulldown (IPU/IPD) resistor should ***not*** be relied upon; TI recommends the use of an external pullup/pulldown resistor.

Table 7-22. Timing Requirements for Reset (see Figure 7-20 and Figure 7-21)

NO.			-594, -729		UNIT
			MIN	MAX	
1	$t_{w(RESET)}$	Pulse duration, $\overline{POR}$ low or $\overline{RESET}$ low	12C(1)		ns
2	$t_{su(CONFIG)}$	Setup time, boot and configuration pins valid before $\overline{POR}$ high or $\overline{RESET}$ high(2)	12C(1)		ns
3	$t_{h(CONFIG)}$	Hold time, boot and configuration pins valid after $\overline{POR}$ high or $\overline{RESET}$ high(2)	0		ns

(1) C = 1/DEV_MXI clock frequency in ns. The device clock source ***must*** be stable and at a valid frequency prior to meeting the $t_{w(RESET)}$ requirement.
(2) For the list of boot and configuration pins, see Table 3-5, *Boot Terminal Functions*.

Table 7-23. Switching Characteristics Over Recommended Operating Conditions During Reset(1) (see Figure 7-21)

NO.	PARAMETER		-594, -729		UNIT
			MIN	MAX	
4	$t_{w(PAUSE)}$	Pulse duration, SYSCLKs paused (low)	10C	10C	ns
23	$t_{d(RSTH-PAUSE)}$	Delay time, $\overline{RESET}$ high or $\overline{POR}$ high to SYSCLKs paused (low)		1990C	ns
5	$t_{d(RSTL-BOOTZ)}$	Delay time, $\overline{RESET}$ low to Boot Configuration Group high impedance	0	20	ns
6	$t_{d(RSTL-DDRZZ)}$	Delay time, $\overline{RESET}$ low to DDR2 Z Group high impedance	0	7P + 20	ns
7	$t_{d(RSTL-DDRLL)}$	Delay time, $\overline{RESET}$ low to DDR2 Low Group low	0	3P + 20	ns
8	$t_{d(RSTL-DDRHH)}$	Delay time, $\overline{RESET}$ low to DDR2 High Group high	0	20	ns
13	$t_{d(RSTL-DDRZHZ)}$	Delay time, $\overline{RESET}$ low to DDR2 Z/High Group high impedance	0	7P + 20	ns
14	$t_{d(RSTL-DDRLHL)}$	Delay time, $\overline{RESET}$ low to DDR2 Low/High Group low	0	20	ns
17	$t_{d(RSTL-ZZ)}$	Delay time, $\overline{RESET}$ low to Z Group high impedance	0	20	ns
18	$t_{d(RSTL-LOWL)}$	Delay time, $\overline{RESET}$ low to Low Group low	0	20	ns
19	$t_{d(RSTL-HIGHH)}$	Delay time, $\overline{RESET}$ low to High Group high	0	20	ns
9	$t_{d(RSTL-BOOTV)}$	Delay time, $\overline{RESET}$ high to Boot Configuration Group valid		(2)	ns
10	$t_{d(RSTH-DDRZV)}$	Delay time, $\overline{RESET}$ high to DDR2 Z Group valid		(2)	ns
11	$t_{d(RSTH-DDRLV)}$	Delay time, $\overline{RESET}$ high to DDR2 Low Group valid		(2)	ns
12	$t_{d(RSTH-DDRHV)}$	Delay time, $\overline{RESET}$ high to DDR2 High Group valid		(2)	ns
15	$t_{d(RSTH-DDRZHV)}$	Delay time, $\overline{RESET}$ high to DDR2 Z/High Group valid high		(2)	ns
16	$t_{d(RSTH-DDRLHV)}$	Delay time, $\overline{RESET}$ high to DDR2 Low/High Group valid high		(2)	ns
20	$t_{d(RSTH-ZV)}$	Delay time, $\overline{RESET}$ high to Z Group valid		(2)	ns
21	$t_{d(RSTH-LOWV)}$	Delay time, $\overline{RESET}$ high to Low Group valid		(2)	ns
22	$t_{d(RSTH-HIGHV)}$	Delay time, $\overline{RESET}$ high to High Group valid		(2)	ns

(1) C = 1/DEV_CLKIN clock frequency in ns.
(2) Following $\overline{RESET}$ high or $\overline{POR}$ high, this signal group maintains the state the pins(s) achieved while $\overline{RESET}$ or $\overline{POR}$ was driven low until the peripheral is enabled via the PSC. For example, the DDR2 Z Group goes high impedance following $\overline{RESET}$ low or $\overline{POR}$ low and remains in the high-impedance state following $\overline{RESET}$ high or $\overline{POR}$ high until the DDR2 controller is enabled via the PSC.

Figure 7-20 shows the Power-Up Timing. Figure 7-21 shows the Warm Reset ($\overline{RESET}$) Timing. Max Reset Timing is identical to Warm Reset Timing, except the boot and configuration pins are ***not*** relatched *and* the BOOTCFG register retains its previous value latched before the Max Reset was initiated.

Copyright © 2007–2012, Texas Instruments Incorporated

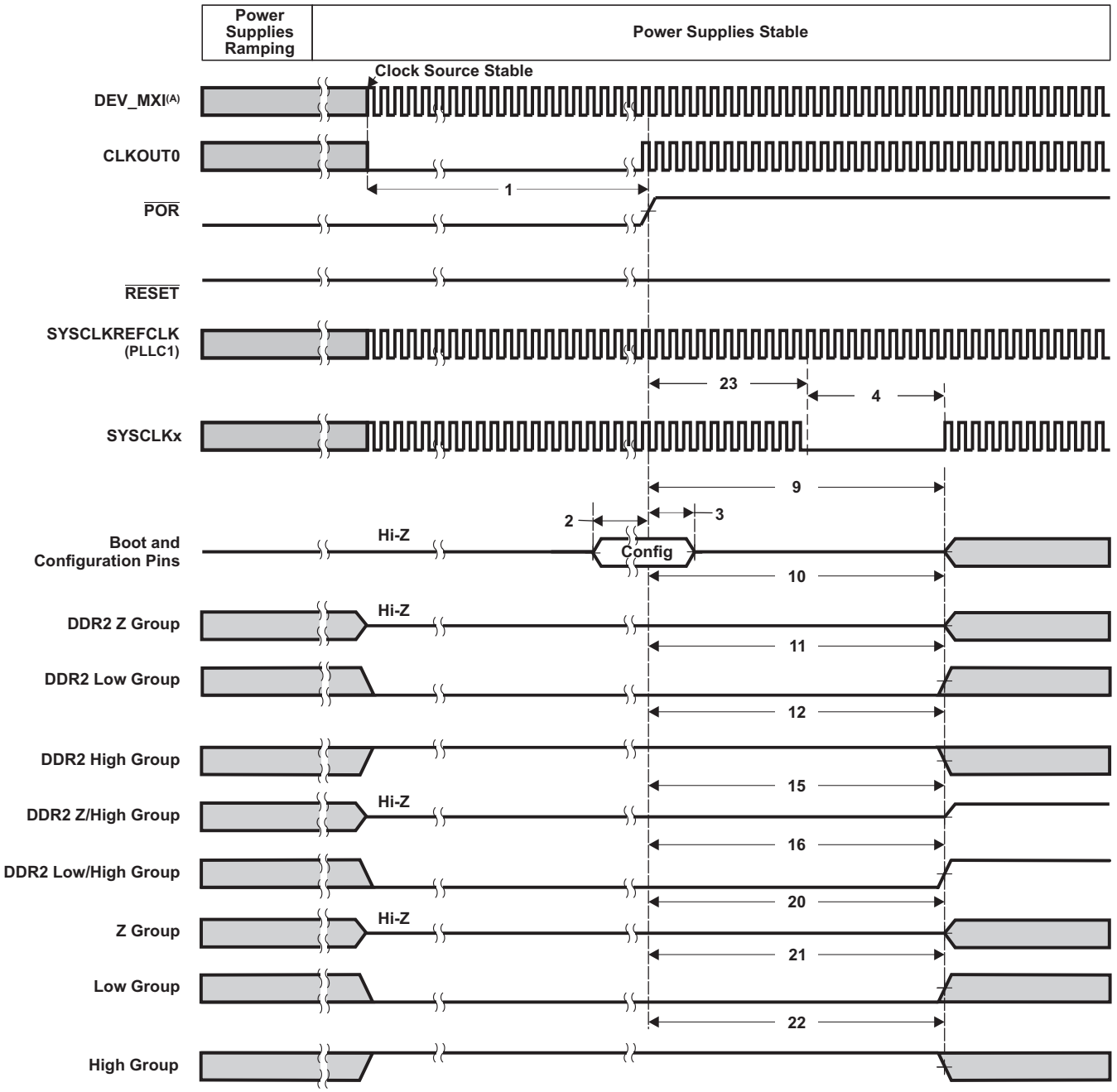

A. Power supplies and DEV_MXI must be stable before the start of $t_{W(RESET)}$.

B. Pin reset behavior depends on which peripheral defaults to controlling the multiplexed pin. For more details on what pin group (e.g., Z Group, Z/Low Group, Z/High Group, etc.) each pin belongs to, see Section 7.7.8, *Pin Behaviors at Reset*.

Figure 7-20. Power-Up Timing

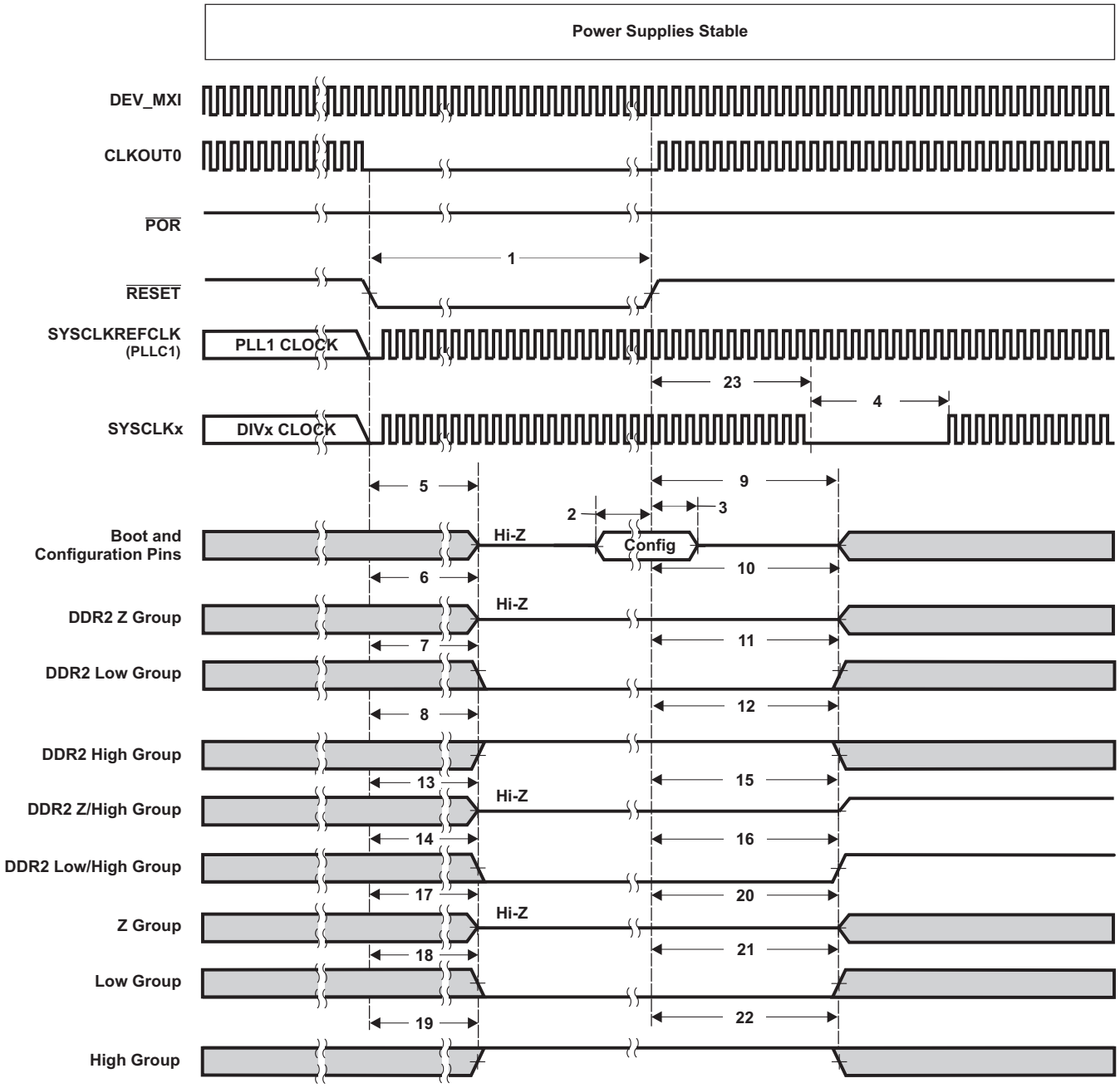

A. Pin reset behavior depends on which peripheral defaults to controlling the multiplexed pin. For more details on what pin group (e.g., Z Group, Z/Low Group, Z/High Group, etc.) each pin belongs to, see Section 7.7.8, *Pin Behaviors at Reset*.

Figure 7-21. Warm Reset ($\overline{\text{RESET}}$) Timing

Copyright © 2007–2012, Texas Instruments Incorporated

7.8 Interrupts

The DM6467 device has a large number of interrupts to service the needs of its many peripherals and subsystems. Both the ARM and C64x+ are capable of servicing these interrupts. All of the device interrupts are routed to the ARM interrupt controller with only a limited set routed to the C64x+ interrupt controller. The interrupts can be selectively enabled or disabled in either of the controllers. In typical applications, the ARM handles most of the peripheral interrupts and grants control to the C64x+ for interrupts that are relevant to DSP algorithms. Also, the ARM and DSP can communicate with each other through interrupts.

7.8.1 ARM CPU Interrupts

The ARM926 CPU core supports 2 direct interrupts: FIQ and IRQ. The DM6467 ARM interrupt controller prioritizes up to 64 interrupt requests from various peripherals and subsystems, which are listed in Table 7-24, and interrupts the ARM CPU. Each interrupt is programmable for up to 8 levels of priority. There are 6 levels for IRQ and 2 levels for FIQ. Interrupts at the same priority level are serviced in order by the ARM Interrupt Number, with the lowest number having the highest priority. Table 7-25 shows the ARM interrupt controller registers and memory locations. For more details on ARM interrupt control, see the *TMS320DM646x DMSoC ARM Subsystem* Reference Guide (literature number SPRUEP9).

Copyright © 2007–2012, Texas Instruments Incorporated

Table 7-24. DM6467 ARM Interrupts

ARM INTERRUPT NUMBER	ACRONYM	SOURCE	ARM INTERRUPT NUMBER	ACRONYM	SOURCE
0	VP_VERTINT0	VPIF	32	TINTL0	Timer 0 lower – TINT12
1	VP_VERTINT1	VPIF	33	TINTH0	Timer 0 upper – TINT34
2	VP_VERTINT2	VPIF	34	TINTL1	Timer 1 lower – TINT12
3	VP_VERTINT3	VPIF	35	TINTH1	Timer 1 upper – TINT34
4	VP_ERRINT	VPIF	36	PWMINT0	PWM 0
5	-	Reserved	37	PWMINT1	PWM 1
6	-	Reserved	38	VLQINT	VLYNQ
7	WDINT	WD Timer (TIMER 2) – TINT12	39	I2CINT	I2C
8	CRGENINT0	CRGEN 0	40	UARTINT0	UART 0
9	CRGENINT1	CRGEN 1	41	UARTINT1	UART 1
10	TSINT0	TSIF 0	42	UARTINT2	UART 2
11	TSINT1	TSIF 1	43	SPINT0	SPI
12	VDCEINT	VDCE	44	SPINT1	SPI
13	USBINT	USB	45	DSP2ARM0	DSP Controller to ARM
14	USBDMAINT	USB DMA	46	-	Reserved
15	PCIINT	PCI	47	PSCINT	Power and Sleep Controller
16	CCINT0	EDMA CC Region 0	48	GPIO0	GPIO
17	CCERRINT	EDMA CC Error	49	GPIO1	GPIO
18	TCERRINT0	EDMA TC 0 Error	50	GPIO2	GPIO
19	TCERRINT1	EDMA TC 1 Error	51	GPIO3	GPIO
20	TCERRINT2	EDMA TC 2 Error	52	GPIO4	GPIO
21	TCERRINT3	EDMA TC 3 Error	53	GPIO5	GPIO
22	IDEINT	ATA	54	GPIO6	GPIO
23	HPIINT	HPI	55	GPIO7	GPIO
24	MAC_RXTH	EMAC RX Threshold	56	GPIOBNK0	GPIO Bank 0
25	MAC_RX	EMAC Receive	57	GPIOBNK1	GPIO Bank 1
26	MAC_TX	EMAC Transmit	58	GPIOBNK2	GPIO Bank 2
27	MAC_MISC	EMAC Miscellaneous	59	DDRINT	DDR2 Memory Controller
28	AXINT0	McASP0 Transmit	60	EMIFAINT	EMIFA
29	ARINT0	McASP0 Receive	61	COMMTX	ARMSS
30	AXINT1	McASP1 Transmit	62	COMMRX	ARMSS
31	-	Reserved	63	EMUINT	E2ICE

Copyright © 2007–2012, Texas Instruments Incorporated

Table 7-25. ARM Interrupt Controller Registers

HEX ADDRESS RANGE	ACRONYM	REGISTER NAME
0x01C4 8000	FIQ0	FIQ Interrupt Status 0 [Interrupt Status of INT[31:0] (If Mapped to FIQ)]
0x01C4 8004	FIQ1	FIQ Interrupt Status 1 [Interrupt Status of INT[63:32] (If Mapped to FIQ)]
0x01C4 8008	IRQ0	IRQ Interrupt Status 0 [Interrupt Status of INT[31:0] (If Mapped to IRQ)]
0x01C4 800C	IRQ1	IRQ Interrupt Status 1 [Interrupt Status of INT[63:32] (If Mapped to IRQ)]
0x01C4 8010	FIQENTRY	Entry Address [28:0] for Valid FIQ Interrupt
0x01C4 8014	IRQENTRY	Entry Address [28:0] for Valid IRQ Interrupt
0x01C4 8018	EINT0	Interrupt Enable Register 0
0x01C4 801C	EINT1	Interrupt Enable Register 1
0x01C4 8020	INCTL	Interrupt Operation Control Register
0x01C4 8024	EABASE	Interrupt Entry Table Base Address Register
0x01C4 8028 - 0x01C4 802F	-	Reserved
0x01C4 8030	INTPRI0	Interrupt 0-7 Priority Select
0x01C4 8034	INTPRI1	Interrupt 8-15 Priority Select
0x01C4 8038	INTPRI2	Interrupt 16-23 Priority Select
0x01C4 803C	INTPRI3	Interrupt 24-31 Priority Select
0x01C4 8040	INTPRI4	Interrupt 32-39 Priority Select
0x01C4 8044	INTPRI5	Interrupt 40-47 Priority Select
0x01C4 8048	INTPRI6	Interrupt 48-55 Priority Select
0x01C4 804C	INTPRI7	Interrupt 56-63 Priority Select
0x01C4 8050 - 0x01C4 83FF	-	Reserved

Copyright © 2007–2012, Texas Instruments Incorporated

7.8.2 DSP Interrupts

The C64x+ DSP interrupt controller combines device events into 12 prioritized interrupts. The source for each of the 12 CPU interrupts is user-programmable and is listed in Table 7-26. Also, the interrupt controller controls the generation of the CPU exception, NMI, and emulation interrupts. Table 7-27 summarizes the C64x+ interrupt controller registers and memory locations. For more details on DSP interrupt control, see the *TMS320DM646x DMSoC DSP Subsystem Reference Guide* (literature number SPRUEP8).

Table 7-26. DM6467 DSP Interrupts

DSP INTERRUPT NUMBER	ACRONYM	SOURCE	DSP INTERRUPT NUMBER	ACRONYM	SOURCE
0	EVT0	C64x+ Int Ctl 0	64	GPIO0	GPIO
1	EVT1	C64x+ Int Ctl 1	65	GPIO1	GPIO
2	EVT2	C64x+ Int Ctl 2	66	GPIO2	GPIO
3	EVT3	C64x+ Int Ctl 3	67	GPIO3	GPIO
4	TINTL0	Timer 0 lower – TINT12	68	GPIO4	GPIO
5	TINTH0	Timer 0 upper – TINT34	69	GPIO5	GPIO
6	TINTL1	Timer 1 lower – TINT12	70	GPIO6	GPIO
7	TINTH1	Timer 1 upper – TINT34	71	GPIO7	GPIO
8	–	Reserved	72	–	Reserved
9	EMU_DTDMA	C64x+ EMC	73	–	Reserved
10	–	Reserved	74	–	Reserved
11	EMU_RTDXRX	C64x+ RTDX	75	–	Reserved
12	EMU_RTDXTX	C64x+ RTDX	76	–	Reserved
13	IDMAINT0	C64x+ EMC 0	77	–	Reserved
14	IDMAINT1	C64x+ EMC 1	78	–	Reserved
15	–	Reserved	79	–	Reserved
16	ARM2DSP0	ARM to DSP Controller 0	80	–	Reserved
17	ARM2DSP1	ARM to DSP Controller 1	81	–	Reserved
18	ARM2DSP2	ARM to DSP Controller 2	82	–	Reserved
19	ARM2DSP3	ARM to DSP Controller 3	83	–	Reserved
20	–	Reserved	84	CCINT1	EDMA CC Region 1
21	–	Reserved	85	CCERRINT	EDMA CC Error
22	–	Reserved	86	TCERRINT0	EDMA TC0 Error
23	–	Reserved	87	TCERRINT1	EDMA TC1 Error
24	–	Reserved	88	TCERRINT2	EDMA TC2 Error
25	–	Reserved	89	TCERRINT3	EDMA TC3 Error
26	–	Reserved	90	IDEINT	ATA
27	–	Reserved	91	–	Reserved
28	–	Reserved	92	–	Reserved
29	–	Reserved	93	–	Reserved
30	–	Reserved	94	–	Reserved
31	–	Reserved	95	–	Reserved
32	–	Reserved	96	INTERR	C64x+ Interrupt Controller Dropped CPU Interrupt Event
33	–	Reserved	97	EMC_IDMAERR	C64x+ EMC Invalid IDMA Parameters
34	–	Reserved	98	–	Reserved
35	–	Reserved	99	–	Reserved
36	–	Reserved	100	–	Reserved

Copyright © 2007–2012, Texas Instruments Incorporated

Table 7-26. DM6467 DSP Interrupts (continued)

DSP INTERRUPT NUMBER	ACRONYM	SOURCE	DSP INTERRUPT NUMBER	ACRONYM	SOURCE
37	–	Reserved	101	–	Reserved
38	–	Reserved	102	–	Reserved
39	–	Reserved	103	–	Reserved
40	–	Reserved	104	–	Reserved
41	–	Reserved	105	–	Reserved
42	–	Reserved	106	–	Reserved
43	–	Reserved	107	–	Reserved
44	–	Reserved	108	–	Reserved
45	–	Reserved	109	–	Reserved
46	–	Reserved	110	–	Reserved
47	–	Reserved	111	–	Reserved
48	–	Reserved	112	–	Reserved
49	–	Reserved	113	PMC_ED	C64x+ PMC
50	–	Reserved	114	–	Reserved
51	–	Reserved	115	–	Reserved
52	–	Reserved	116	UMCED1	C64x+ UMC 1
53	–	Reserved	117	UMCED2	C64x+ UMC 2
54	AXINT0	McASP 0 Transmit	118	PDCINT	C64x+ PDC
55	ARINT0	McASP 0 Receive	119	SYSCMPA	C64x+ SYS
56	AXINT1	McASP 1 Transmit	120	PMCCMPA	C64x+ PMC
57	–	Reserved	121	PMCDMPA	C64x+ PMC
58	–	Reserved	122	DMCCMPA	C64x+ DMC
59	–	Reserved	123	DMCDMPA	C64x+ DMC
60	–	Reserved	124	UMCCMPA	C64x+ UMC
61	–	Reserved	125	UMCDMPA	C64x+ UMC
62	–	Reserved	126	EMCCMPA	C64x+ EMC
63	–	Reserved	127	EMCBUSERR	C64x+ EMC

Copyright © 2007–2012, Texas Instruments Incorporated

Table 7-27. C64x+ Interrupt Controller Registers

HEX ADDRESS RANGE	ACRONYM	REGISTER NAME
0x0180 0000	EVTFLAG0	Event flag register 0
0x0180 0004	EVTFLAG1	Event flag register 1
0x0180 0008	EVTFLAG2	Event flag register 2
0x0180 000C	EVTFLAG3	Event flag register 3
0x0180 0020	EVTSET0	Event set register 0
0x0180 0024	EVTSET1	Event set register 1
0x0180 0028	EVTSET2	Event set register 2
0x0180 002C	EVTSET3	Event set register 3
0x0180 0040	EVTCLR0	Event clear register 0
0x0180 0044	EVTCLR1	Event clear register 1
0x0180 0048	EVTCLR2	Event clear register 2
0x0180 004C	EVTCLR3	Event clear register 3
0x0180 0080	EVTMASK0	Event mask register 0
0x0180 0084	EVTMASK1	Event mask register 1
0x0180 0088	EVTMASK2	Event mask register 2
0x0180 008C	EVTMASK3	Event mask register 3
0x0180 00A0	MEVTFLAG0	Masked event flag register 0
0x0180 00A4	MEVTFLAG1	Masked event flag register 1
0x0180 00A8	MEVTFLAG2	Masked event flag register 2
0x0180 00AC	MEVTFLAG3	Masked event flag register 3
0x0180 00C0	EXPMASK0	Exception mask register 0
0x0180 00C4	EXPMASK1	Exception mask register 1
0x0180 00C8	EXPMASK2	Exception mask register 2
0x0180 00CC	EXPMASK3	Exception mask register 3
0x0180 00E0	MEXPFLAG0	Masked exception flag register 0
0x0180 00E4	MEXPFLAG1	Masked exception flag register 1
0x0180 00E8	MEXPFLAG2	Masked exception flag register 2
0x0180 00EC	MEXPFLAG3	Masked exception flag register 3
0x0180 0104	INTMUX1	Interrupt mux register 1
0x0180 0108	INTMUX2	Interrupt mux register 2
0x0180 010C	INTMUX3	Interrupt mux register 3
0x0180 0180	INTXSTAT	Interrupt exception status
0x0180 0184	INTXCLR	Interrupt exception clear
0x0180 0188	INTDMASK	Dropped interrupt mask register

Copyright © 2007–2012, Texas Instruments Incorporated

7.9 External Memory Interface (EMIF)

DM6467 supports several memory and external device interfaces, including:

- Asynchronous EMIF (EMIFA) for interfacing to NOR Flash, SRAM, etc.
- NAND Flash
- ATA (see Section 7.20, *ATA Controller*)

7.9.1 Asynchronous EMIF (EMIFA)

The DM6467 Asynchronous EMIF (EMIFA) provides an 8-bit or 16-bit data bus, an address bus width up to 24 bits, and 4 chip selects, along with memory control signals. These signals are multiplexed between these peripherals:

- EMIFA and NAND interfaces
- ATA interface
- Host-Port Interface (HPI)
- PCI
- GPIO

7.9.2 NAND (NAND, SmartMedia/SSFDC, xD)

The EMIFA interface provides both the asynchronous EMIF and NAND interfaces. Four chip selects are provided and each are individually configurable to provide either EMIFA or NAND support. The NAND features supported are as follows.

- NAND flash on up to 4 asynchronous chip selects
- 8- or 16-bit data bus width
- Programmable cycle timings
- Performs ECC calculation
- NAND Mode also supports SmartMedia/SSFDC (Solid State Floppy Disk Controller) and xD memory cards
- ARM ROM supports booting of the DM6467 ARM926 processor from NAND flash located at CS2

The memory map for EMIFA and NAND registers is shown in Table 7-28. For more details on the EMIFA and NAND interfaces, the *TMS320DM646x DMSoC Asynchronous External Memory Interface (EMIF)* User's Guide (literature number SPRUEQ7).

7.9.3 EMIFA Peripheral Register Description(s)

Table 7-28 shows the EMIFA/NAND registers.

Copyright © 2007–2012, Texas Instruments Incorporated

Table 7-28. EMIFA/NAND Registers

HEX ADDRESS RANGE	ACRONYM	REGISTER NAME
0x2000 8000	RCSR	Revision Code and Status Register
0x2000 8004	AWCCR	Asynchronous Wait Cycle Configuration Register
0x2000 8008 - 0x2000 800F	–	Reserved
0x2000 8010	A1CR	Asynchronous 1 Configuration Register (CS2 Space)
0x2000 8014	A2CR	Asynchronous 2 Configuration Register (CS3 Space)
0x2000 8018	A3CR	Asynchronous 3 Configuration Register (CS4 Space)
0x2000 801C	A4CR	Asynchronous 4 Configuration Register (CS5 Space)
0x2000 8020 - 0x2000 803F	–	Reserved
0x2000 8040	EIRR	EMIF Interrupt Raw Register
0x2000 8044	EIMR	EMIF Interrupt Mask Register
0x2000 8048	EIMSR	EMIF Interrupt Mask Set Register
0x2000 804C	EIMCR	EMIF Interrupt Mask Clear Register
0x2000 8050 - 0x2000 805F	–	Reserved
0x2000 8060	NANDFCR	NAND Flash Control Register
0x2000 8064	NANDFSR	NAND Flash Status Register
0x2000 8070	NANDF1ECC	NAND Flash 1 ECC Register (CS2 Space)
0x2000 8074	NANDF2ECC	NAND Flash 2 ECC Register (CS3 Space)
0x2000 8078	NANDF3ECC	NAND Flash 3 ECC Register (CS4 Space)
0x2000 807C	NANDF4ECC	NAND Flash 4 ECC Register (CS5 Space)
0x2000 8080 - 0x2000 8FFF	–	Reserved

Copyright © 2007–2012, Texas Instruments Incorporated

7.9.4 EMIFA Electrical Data/Timing

Table 7-29. Timing Requirements for Asynchronous Memory Cycles for EMIFA Module(1) (see Figure 7-22 and Figure 7-23)

NO.			-594, -729		UNIT
			MIN	MAX	
READS and WRITES					
2	$t_{w(EM_WAIT)}$	Pulse duration, EM_WAITx assertion and deassertion	2E		ns
READS					
12	$t_{su(EMDV-EMOEH)}$	Setup time, EM_D[15:0] valid before $\overline{EM_OE}$ high	5		ns
13	$t_{h(EMOEH-EMDIV)}$	Hold time, EM_D[15:0] valid after $\overline{EM_OE}$ high	0		ns
14	$t_{su\ (EMWAIT-EMOEH)}$	Setup time, EM_WAITx asserted before $\overline{EM_OE}$ high(2)	4E + 3		ns
WRITES					
28	$t_{\ su(EMWAIT-EMWEH)}$	Setup time, EM_WAITx asserted before $\overline{EM_WE}$ high(2)	4E + 3		ns

(1) E = SYSCLK3 period in ns for EMIFA. For example, when running the DSP CPU at 594 MHz, use E = 6.734 ns.
(2) Setup before end of STROBE phase (if no extended wait states are inserted) by which EM_WAITx must be asserted to add extended wait states. Figure 7-24 and Figure 7-25 describe EMIF transactions that include extended wait states inserted during the STROBE phase. However, cycles inserted as part of this extended wait period should not be counted; the 4E requirement is to the start of where the HOLD phase would begin if there were no extended wait cycles.

Copyright © 2007–2012, Texas Instruments Incorporated

Table 7-30. Switching Characteristics Over Recommended Operating Conditions for Asynchronous Memory Cycles for EMIFA Module(1) (2) (see Figure 7-22 and Figure 7-23)

NO.	PARAMETER		-594, -729		UNIT
			MIN	MAX	
READS and WRITES					
1	$t_{d(TURNAROUND)}$	Turn around time	(TA + 1) * E - 3	(TA + 1) * E + 3	ns
READS					
3	$t_{c(EMRCYCLE)}$	EMIF read cycle time (EW = 0)	(RS + RST + RH + TA + 4) * E - 3	(RS + RST + RH + TA + 4) * E + 3	ns
		EMIF read cycle time (EW = 1)	(RS + RST + RH + TA + 4) * E - 3	4184 * E + 3	ns
4	$t_{su(EMCSL-EMOEL)}$	Output setup time, $\overline{EM_CS[5:2]}$ low to $\overline{EM_OE}$ low (SS = 0)	(RS + 1) * E - 3	(RS + 1) * E + 3	ns
		Output setup time, $\overline{EM_CS[5:2]}$ low to $\overline{EM_OE}$ low (SS = 1)	3		ns
5	$t_{h(EMOEH-EMCSH)}$	Output hold time, $\overline{EM_OE}$ high to $\overline{EM_CS[5:2]}$ high (SS = 0)	(RH + 1) * E - 3	(RH + 1) * E + 3	ns
		Output hold time, $\overline{EM_OE}$ high to $\overline{EM_CS[5:2]}$ high (SS = 1)	3		ns
6	$t_{su(EMBAV-EMOEL)}$	Output setup time, EM_BA[1:0] valid to $\overline{EM_OE}$ low	(RS + 1) * E - 3	(RS + 1) * E + 3	ns
7	$t_{h(EMOEH-EMBAIV)}$	Output hold time, $\overline{EM_OE}$ high to EM_BA[1:0] invalid	(RH + 1) * E - 3	(RH + 1) * E + 3	ns
8	$t_{su(EMBAV-EMOEL)}$	Output setup time, EM_A[22:0] valid to $\overline{EM_OE}$ low	(RS + 1) * E - 3	(RS + 1) * E + 3	ns
9	$t_{h(EMOEH-EMBAIV)}$	Output hold time, $\overline{EM_OE}$ high to EM_A[22:0] invalid	(RH + 1) * E - 3	(RH + 1) * E + 3	ns
10	$t_{w(EMOEL)}$	$\overline{EM_OE}$ active low width (EW = 0)	(RST + 1) * E - 3	(RST + 1) * E + 3	ns
		$\overline{EM_OE}$ active low width (EW = 1)	(RST + 1) * E - 3	(RST + 4097) * E + 3	ns
11	$t_{d(EMWAITH-EMOEH)}$	Delay time from EM_WAITx deasserted to $\overline{EM_OE}$ high		4E + 3	ns
WRITES					
15	$t_{c(EMWCYCLE)}$	EMIF write cycle time (EW = 0)	(WS + WST + WH + TA + 4) * E - 3	(WS + WST + WH + TA + 4) * E + 3	ns
		EMIF write cycle time (EW = 1)	(WS + WST + WH + TA + 4) * E - 3	4184 * E + 3	ns
16	$t_{su(EMCSL-EMWEL)}$	Output setup time, $\overline{EM_CS[5:2]}$ low to $\overline{EM_WE}$ low (SS = 0)	(WS + 1) * E - 3	(WS + 1) * E + 3	ns
		Output setup time, $\overline{EM_CS[5:2]}$ low to $\overline{EM_WE}$ low (SS = 1)	3		ns
17	$t_{h(EMWEH-EMCSH)}$	Output hold time, $\overline{EM_WE}$ high to $\overline{EM_CS[5:2]}$ high (SS = 0)	(WH + 1) * E - 3	(WH + 1) * E + 3	ns
		Output hold time, $\overline{EM_WE}$ high to $\overline{EM_CS[5:2]}$ high (SS = 1)	3		ns
18	$t_{su(EMRNW-EMWEL)}$	Output setup time, EM_R/$\overline{W}$ valid to $\overline{EM_WE}$ low	(WS + 1) * E - 3	(WS + 1) * E + 3	ns
19	$t_{h(EMWEH-EMRNW)}$	Output hold time, $\overline{EM_WE}$ high to EM_R/$\overline{W}$ invalid	(WH + 1) * E - 3	(WH + 1) * E + 3	ns
20	$t_{su(EMBAV-EMWEL)}$	Output setup time, EM_BA[1:0] valid to $\overline{EM_WE}$ low	(WS + 1) * E - 3	(WS + 1) * E + 3	ns
21	$t_{h(EMWEH-EMBAIV)}$	Output hold time, $\overline{EM_WE}$ high to EM_BA[1:0] invalid	(WH + 1) * E - 3	(WH + 1) * E + 3	ns
22	$t_{su(EMAV-EMWEL)}$	Output setup time, EM_A[22:0] valid to $\overline{EM_WE}$ low	(WS + 1) * E - 3	(WS + 1) * E + 3	ns
23	$t_{h(EMWEH-EMAIV)}$	Output hold time, $\overline{EM_WE}$ high to EM_A[22:0] invalid	(WH + 1) * E - 3	(WH + 1) * E + 3	ns
24	$t_{w(EMWEL)}$	$\overline{EM_WE}$ active low width (EW = 0)	(WST + 1) * E - 3	(WST + 1) * E + 3	ns
		$\overline{EM_WE}$ active low width (EW = 1)	(WST + 1) * E - 3	(WST + 4097) * E + 3	ns
25	$t_{d(EMWAITH-EMWEH)}$	Delay time from EM_WAITx deasserted to $\overline{EM_WE}$ high		4E + 3	ns
26	$t_{su(EMDV-EMWEL)}$	Output setup time, EM_D[15:0] valid to $\overline{EM_WE}$ low	(WS + 1) * E - 3	(WS + 1) * E + 3	ns

(1) RS = Read setup, RST = Read Strobe, RH = Read Hold, WS = Write Setup, WST = Write Strobe, WH = Write Hold, TA = Turn Around, EW = Extend Wait mode, SS = Select Strobe mode. These parameters are programmed via the Asynchronous n Configuration and the Asynchronous Wait Cycle Configuration registers and support the following range of values: TA[0–3], RS[0–15], RST[0–63], RH[0–7], WS[0–15], WST[0–63], WH[0–7], EW[0–1], and MEWC[0–255]. For more information, see the *TMS320DM646x DMSoC Asynchronous External Memory Interface (EMIF)* User's Guide (literature number SPRUEQ7).

(2) E = SYSCLK3 period in ns for EMIFA. For example, when running the DSP CPU at 594 MHz, use E = 6.734 ns.

Copyright © 2007–2012, Texas Instruments Incorporated

Table 7-30. Switching Characteristics Over Recommended Operating Conditions for Asynchronous Memory Cycles for EMIFA Module[1] [2] (see Figure 7-22 and Figure 7-23) (continued)

NO.	PARAMETER		-594, -729		UNIT
			MIN	MAX	
27	$t_{h(EMWEH-EMDIV)}$	Output hold time, $\overline{EM_WE}$ high to EM_D[15:0] invalid	(WH + 1) * E - 3	(WH + 1) * E + 3	ns

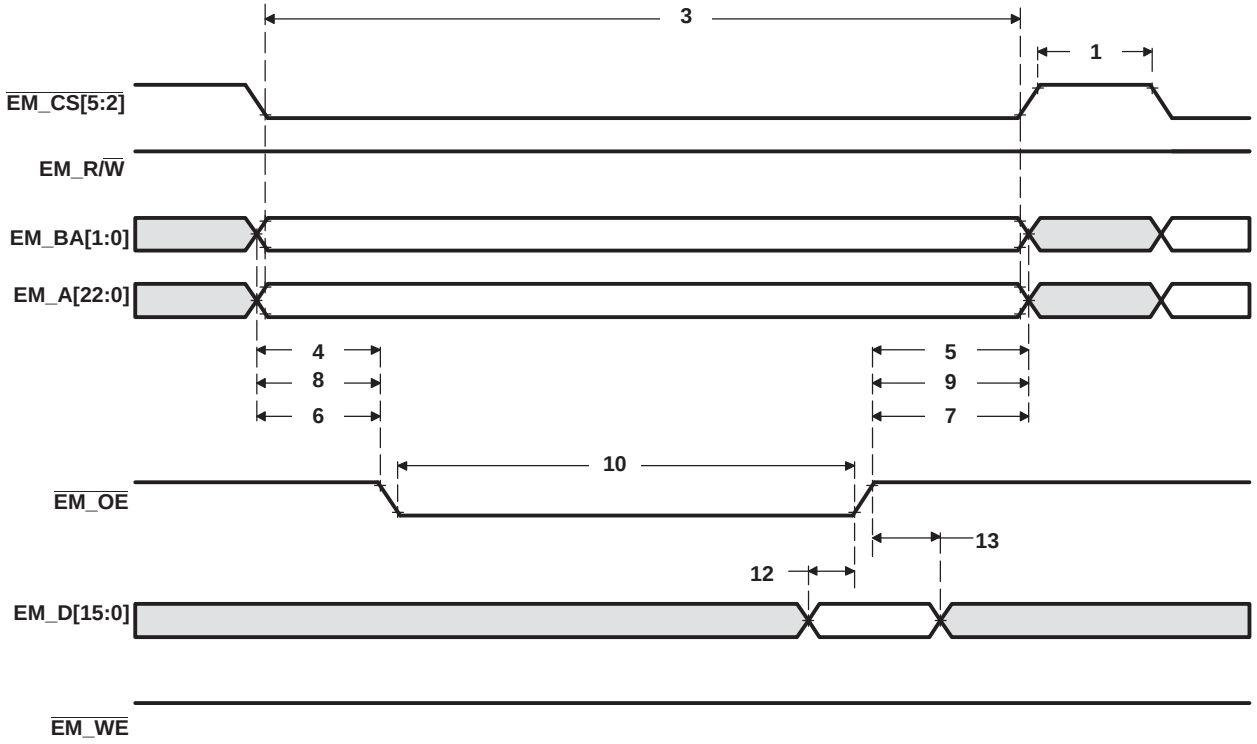

Figure 7-22. Asynchronous Memory Read Timing for EMIF

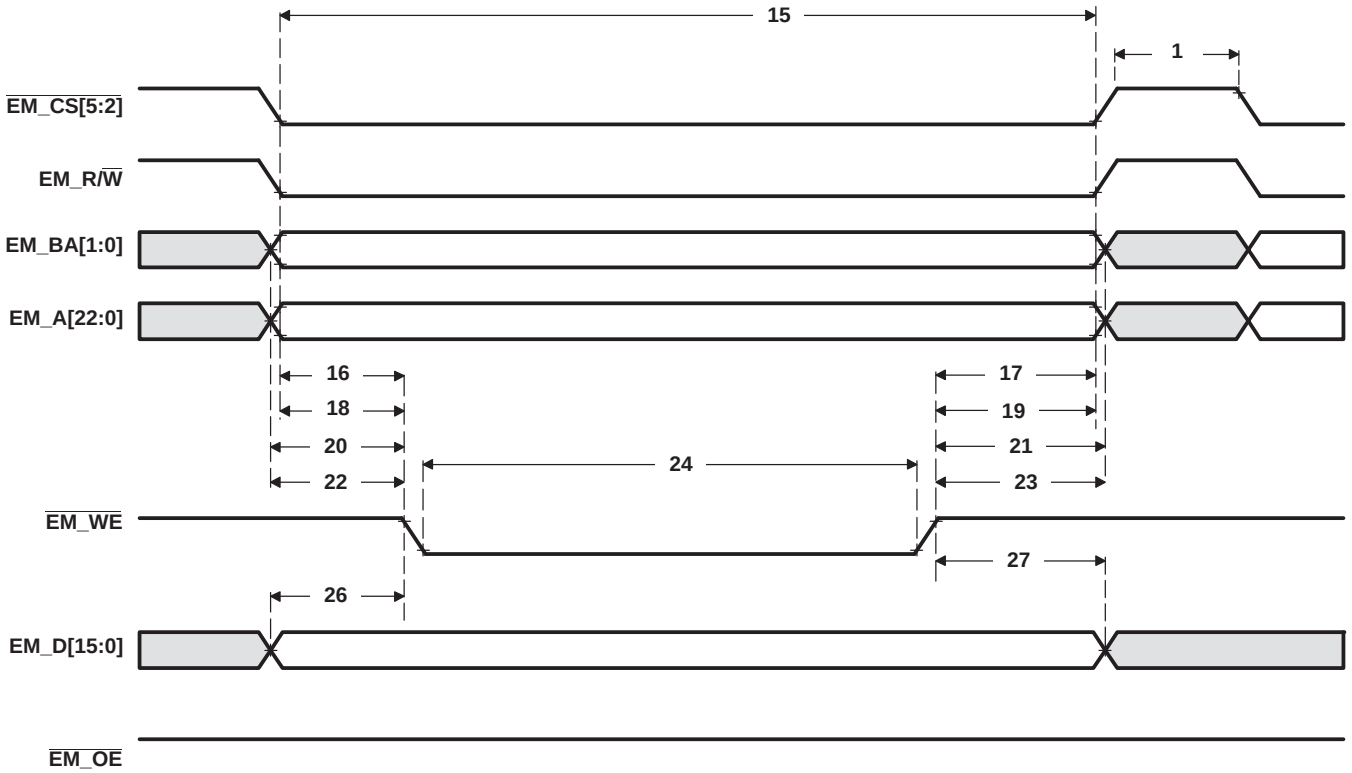

Figure 7-23. Asynchronous Memory Write Timing for EMIF

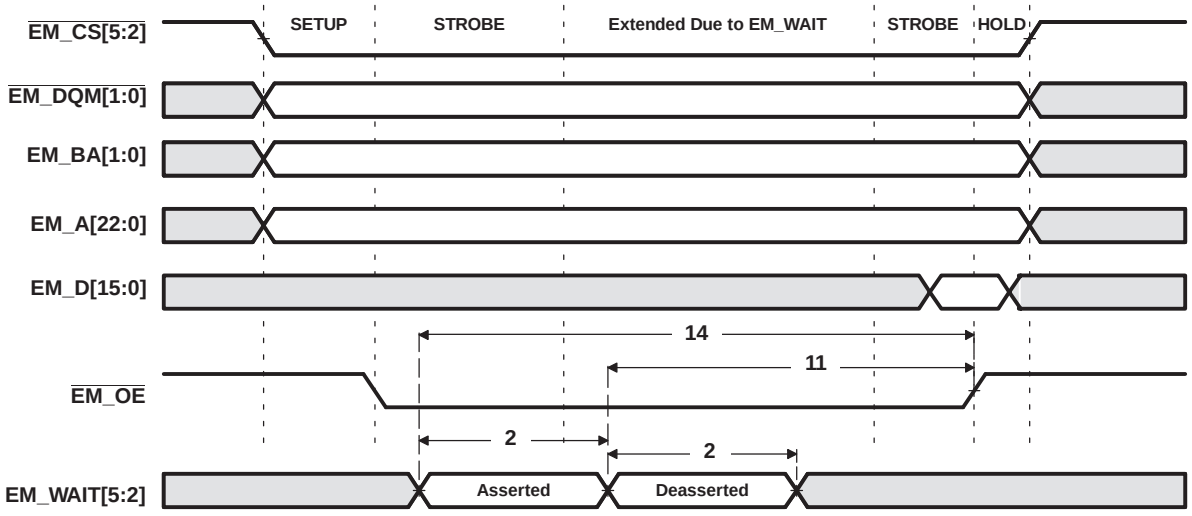

Figure 7-24. EM_WAITx Read Timing Requirements

Copyright © 2007–2012, Texas Instruments Incorporated

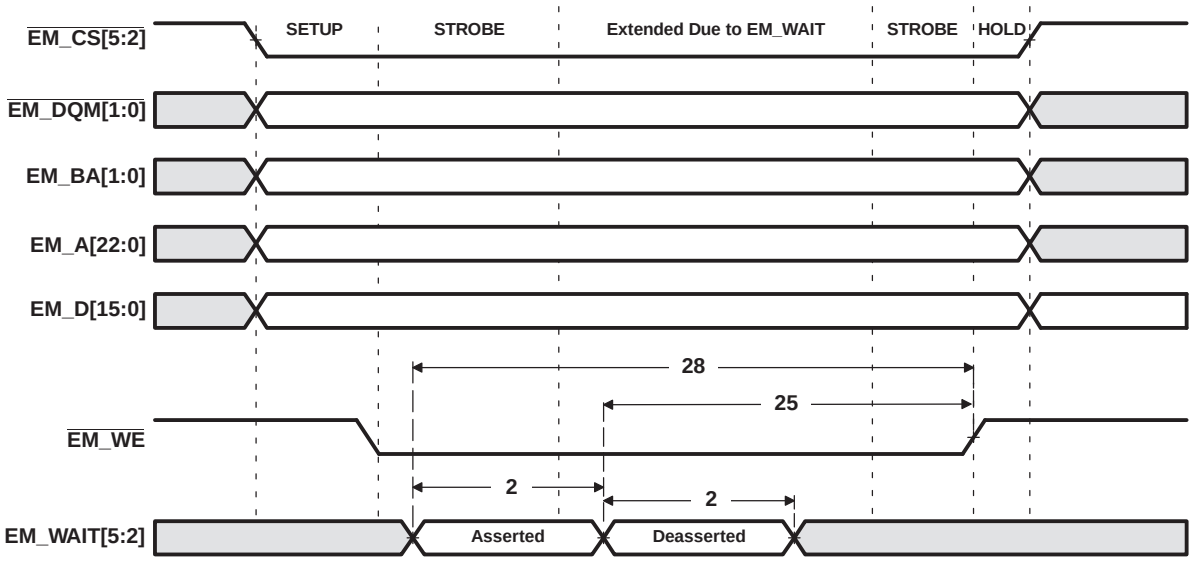

Figure 7-25. EM_WAITx Write Timing Requirements

7.10 DDR2 Memory Controller

The DDR2 Memory Controller is a dedicated interface to DDR2 SDRAM. It supports JESD79D-2A standard compliant DDR2 SDRAM devices and can interface to either 16-bit or 32-bit DDR2 SDRAM devices. For details on the DDR2 Memory Controller, see the *TMS320DM646x DMSoC DDR2 Memory Controller User's Guide* (literature number SPRUEQ4).

A memory map of the DDR2 Memory Controller registers is shown in Table 7-31.

Table 7-31. DDR2 Memory Controller Registers

HEX ADDRESS RANGE	ACRONYM	REGISTER NAME
0x01C4 004C	–	Reserved
0x01C4 2038	–	Reserved
0x2000 0000 - 0x2000 0003	–	Reserved
0x2000 0004	SDRSTAT	SDRAM Status Register
0x2000 0008	SDBCR	SDRAM Bank Configuration Register
0x2000 000C	SDRCR	SDRAM Refresh Control Register
0x2000 0010	SDTIMR	SDRAM Timing Register 1
0x2000 0014	SDTIMR2	SDRAM Timing Register 2
0x2000 0018 - 0x2000 001F	–	Reserved
0x2000 0020	PBBPR	Peripheral Bus Burst Priority Register
0x2000 0024 - 0x2000 00BF	–	Reserved
0x2000 00C0	IRR	Interrupt Raw Register
0x2000 00C4	IMR	Interrupt Masked Register
0x2000 00C8	IMSR	Interrupt Mask Set Register
0x2000 00CC	IMCR	Interrupt Mask Clear Register
0x2000 00D0 - 0x2000 00E3	–	Reserved
0x2000 00E4	DDRPHYCR	DDR2 PHY Control Register
0x2000 00E8 - 0x2000 00EF	–	Reserved
0x2000 00F0	VTPIOCR	DDR2 VTP IO Control Register
0x2000 00F4 - 0x2000 7FFF	–	Reserved

Copyright © 2007–2012, Texas Instruments Incorporated

7.10.1 DDR2 Memory Controller Electrical Data/Timing

TI only supports board designs that follow the guidelines outlined in this document.

Table 7-32. Switching Characteristics Over Recommended Operating Conditions for DDR2 Memory Controller(1) (2)(see Figure 7-26)

NO.	PARAMETER		-594		-729		UNIT
			MIN	MAX	MIN	MAX	
1	$t_{c(DDR_CLK)}$	Cycle time, DDR_CLK	3.367	8	3.220	8	ns
2	$f_{(DDR_CLK)}$	Frequency, DDR_CLK	125	297	125	310.5	MHz

(1) DDR_CLK cycle time = 2 x PLL2 _SYSCLK1 cycle time.
(2) The PLL2 Controller ***must*** be programmed such that the resulting DDR_CLK clock frequency is within the specified range.

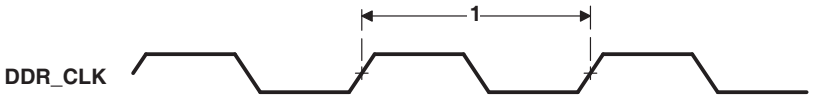

Figure 7-26. DDR2 Memory Controller Clock Timing

7.10.2 DDR2 Interface

This section provides the timing specification for the DDR2 interface as a PCB design and manufacturing specification. The design rules constrain PCB trace length, PCB trace skew, signal integrity, cross-talk, and signal timing. These rules, when followed, result in a reliable DDR2 memory system without the need for a complex timing closure process. For more information regarding the guidelines for using this DDR2 specification, see *Understanding TI's PCB Routing Rule-Based DDR2 Timing Specification* Application Report (SPRAAV0).

7.10.2.1 DDR2 Interface Schematic

Figure 7-27 shows the DDR2 interface schematic for a x32 DDR2 memory system. The x16 DDR2 system schematic is identical except that the high word DDR2 device is deleted, see Figure 7-28. The pin numbers for the DM6467 can be obtained from the Section 3.6, *Pin Assignments* of this document.

7.10.2.2 Compatible JEDEC DDR2 Devices

Table 7-33 shows the parameters of the JEDEC DDR2 devices that are compatible with this interface. Generally, the DDR2 interface is compatible with x16 DDR2-667 speed grade DDR2 devices.

Table 7-33. Compatible JEDEC DDR2 Devices

No.	Parameter	Min	Max	Unit
1	JEDEC DDR2 Device Speed Grade(1)	DDR2-667		
2	JEDEC DDR2 Device Bit Width	x16	x16	Bits
3	JEDEC DDR2 Device Count(2)	1	2	Devices
4	JEDEC DDR2 Device Ball Count(3)	84	92	Balls

(1) Higher DDR2 speed grades are supported due to inherent JEDEC DDR2 backwards compatibility.
(2) 1 DDR2 device is used for 16 bit DDR2 memory system. 2 DDR2 devices are used for 32 bit DDR2 memory system.
(3) 92 ball devices retained for legacy support. New designs will migrate to 84 ball DDR2 devices. Electrrically the 92 and 84 ball DDR2 devices are the same.

Copyright © 2007–2012, Texas Instruments Incorporated

7.10.2.3 PCB Stackup

The minimum stackup required for routing the DM6467 is a six layer stack as shown in Table 7-34. Additional layers may be added to the PCB stack up to accommodate other circuity or to reduce the size of the PCB footprint.

Table 7-34. DM6467 Minimum PCB Stack Up

Layer	Type	Description
1	Signal	Top Routing Mostly Horizontal
2	Plane	Ground
3	Plane	Power
4	Signal	Internal Routing
5	Plane	Ground
6	Signal	Bottom Routing Mostly Vertical

Copyright © 2007–2012, Texas Instruments Incorporated

Complete stack up specifications are provided in Table 7-35.

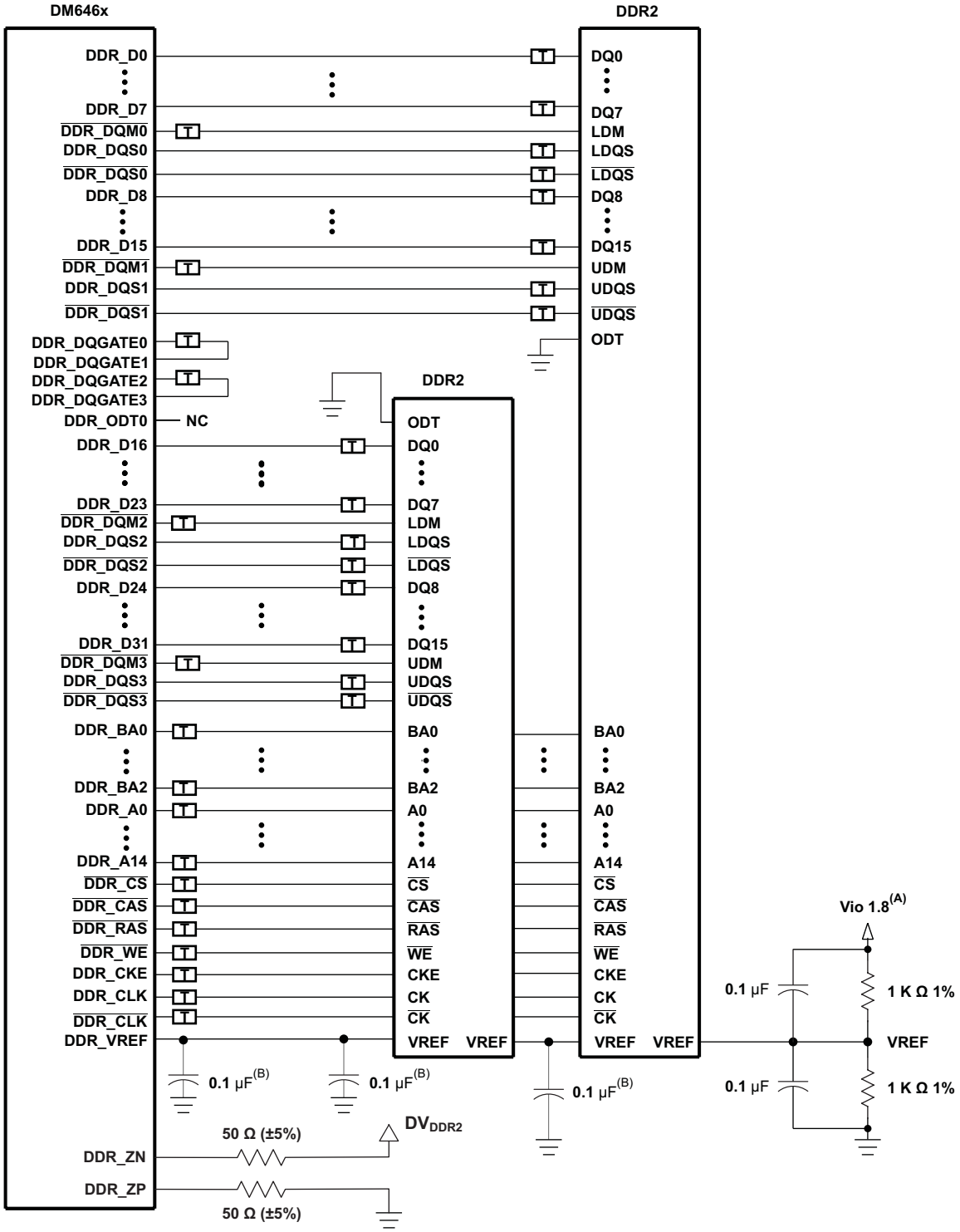

T Terminator, if desired. See terminator comments.

A Vio1.8 is the power supply for the DDR2 memories and DM646x DDR2 interface.

B One of these capacitors can be eliminated if the divider and its capacitors are placed near a device VREF pin.

Figure 7-27. DM6467 32-Bit DDR2 High Level Schematic

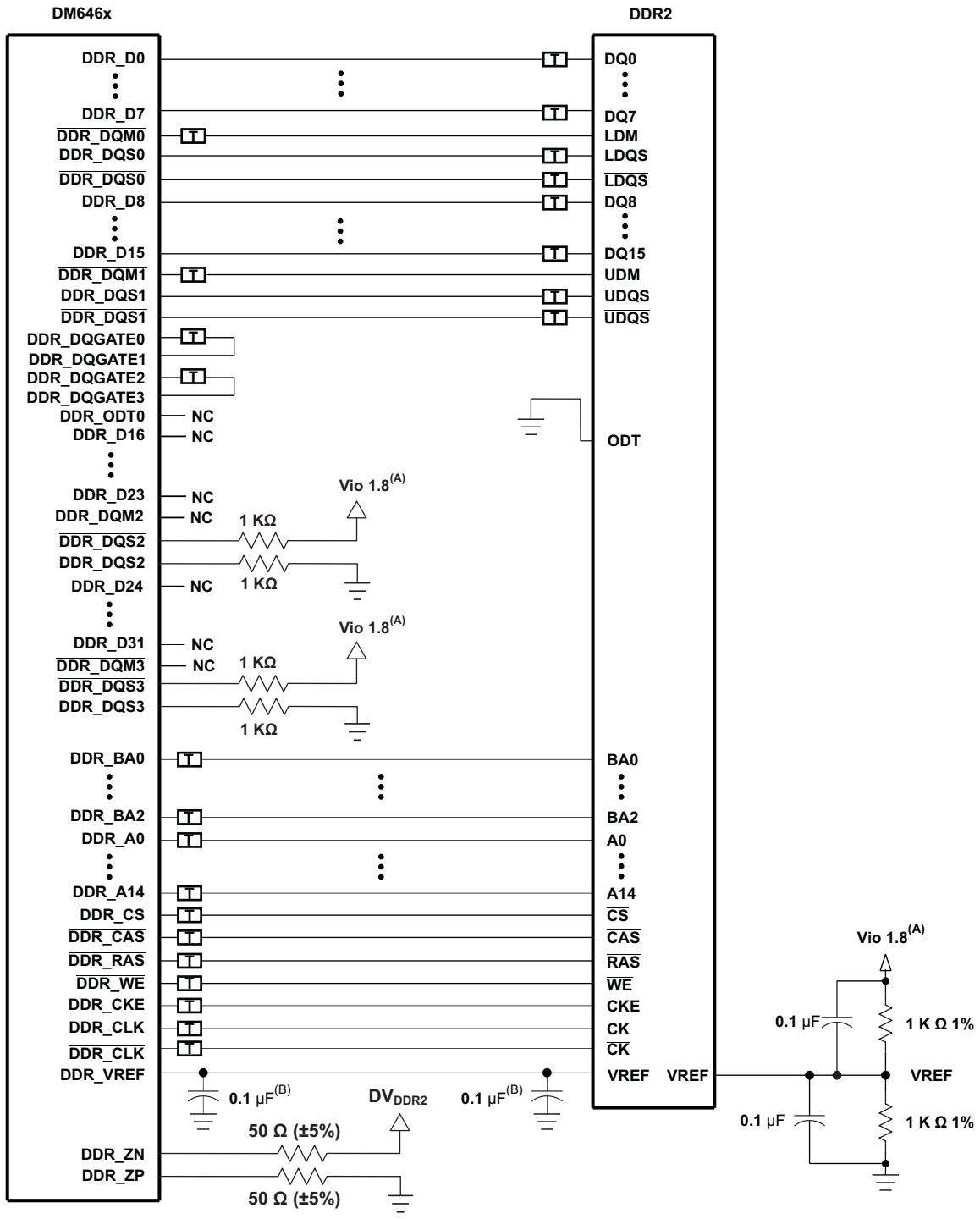

T Terminator, if desired. See terminator comments.

A Vio1.8 is the power supply for the DDR2 memories and DM646x DDR2 interface.

B One of these capacitors can be eliminated if the divider and its capacitors are placed near a device VREF pin.

Figure 7-28. DM6467 16-Bit DDR2 High Level Schematic

Table 7-35. PCB Stack Up Specifications

No.	Parameter	Min	Typ	Max	Unit
1	PCB Routing/Plane Layers	6			

Copyright © 2007–2012, Texas Instruments Incorporated

Table 7-35. PCB Stack Up Specifications (continued)

No.	Parameter	Min	Typ	Max	Unit
2	Signal Routing Layers	3			
3	Full ground layers under DDR2 routing Region	2			
4	Number of ground plane cuts allowed within DDR routing region			0	
5	Number of ground reference planes required for each DDR2 routing layer	1			
6	Number of layers between DDR2 routing layer and reference ground plane			0	
7	PCB Routing Feature Size		4		Mils
8	PCB Trace Width w		4		Mils
8	PCB BGA escape via pad size		18		Mils
9	PCB BGA escape via hole size		8		Mils
10	DSP Device BGA pad size(1)				
11	DDR2 Device BGA pad size(2)				
12	Single Ended Impedance, Zo	50		75	Ω
13	Impedance Control(3)	Z-5	Z	Z+5	Ω

(1) See the *Flip Chip Ball Grid Array Package Reference Guide* (SPRU811) for DSP device BGA pad size.
(2) See the DDR2 device manufacturer documenation for the DDR2 device BGA pad size.
(3) Z is the nominal singled ended impedance selected for the PCB specified by item 12.

7.10.2.4 Placement

Figure 7-29 shows the required placement for the DM6467 device as well as the DDR2 devices. The dimensions for Figure 7-29 are defined in Table 7-36. The placement does not restrict the side of the PCB that the devices are mounted on. The ultimate purpose of the placement is to limit the maximum trace lengths and allow for proper routing space. For a 16 bit DDR memory systems, the high word DDR2 device is omitted from the placement.

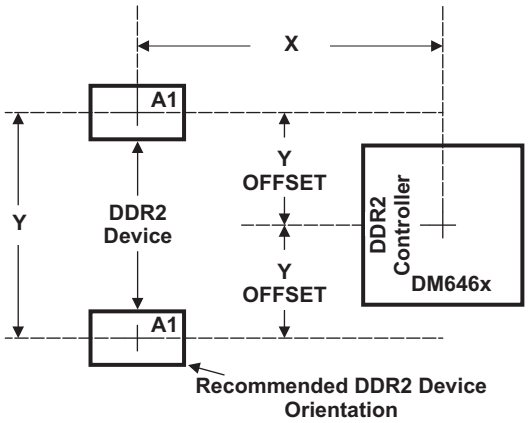

Figure 7-29. DM6467 and DDR2 Device Placement

Table 7-36. Placement Specifications

No.	Parameter	Min	Max	Unit
1	X(1) (2)		1660	Mils
2	Y(1) (2)		1280	Mils
3	Y Offset(1) (2) (3)		650	Mils
4	DDR2 Keepout Region(4)			
5	Clearance from non-DDR2 signal to DDR2 Keepout Region(5)	4		w

(1) See Figure 7-27 for dimension defintions.
(2) Measurements from center of DSP device to center of DDR2 device.
(3) For 16 bit memory systems it is recommended that Y Offset be as small as possible.
(4) DDR2 Keepout region to encompass entire DDR2 routing area
(5) Non-DDR2 signals allowed within DDR2 keepout region provided they are separated from DDR2 routing layers by a ground plane.

7.10.2.5 DDR2 Keep Out Region

The region of the PCB used for the DDR2 circuitry must be isolated from other signals. The DDR2 keep out region is defined for this purpose and is shown in Figure 7-30. The size of this region varies with the placement and DDR routing. Additional clearances required for the keep out region are shown in Table 7-36.

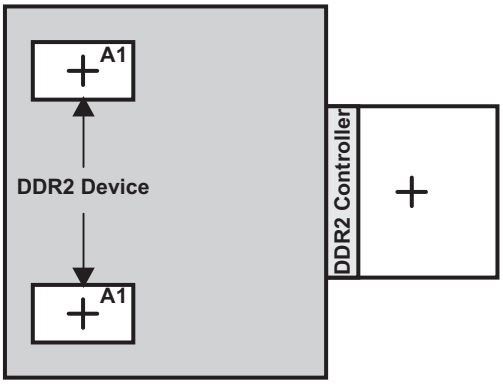

Figure 7-30. DDR2 Keepout Region

NOTE

The region shown in Figure 7-30 should encompass all the DDR2 circuitry and varies depending on placement. Non-DDR2 signals should not be routed on the DDR signal layers within the DDR2 keep out region. Non-DDR2 signals may be routed in the region provided they are routed on layers separated from DDR2 signal layers by a ground layer. No breaks should be allowed in the reference ground layers in this region. In addition, the 1.8-V power plane should cover the entire keep out region.

Copyright © 2007–2012, Texas Instruments Incorporated

7.10.2.6 Bulk Bypass Capacitors

Bulk bypass capacitors are required for moderate speed bypassing of the DDR2 and other circuitry. Table 7-37 contains the minimum numbers and capacitance required for the bulk bypass capacitors. Note that this table only covers the bypass needs of the DSP and DDR2 interfaces. Additional bulk bypass capacitance may be needed for other circuitry.

Table 7-37. Bulk Bypass Capacitors

No.	Parameter	Min	Max	Unit
1	DV_{DD18} Bulk Bypass Capacitor Count(1)	3		Devices
2	DV_{DD18} Bulk Bypass Total Capacitance	30		µF
3	DDR#1 Bulk Bypass Capacitor Count(1)	1		Devices
4	DDR#1 Bulk Bypass Total Capacitance(1)	10		µF
5	DDR#2 Bulk Bypass Capacitor Count(2)	1		Devices
6	DDR#2 Bulk Bypass Total Capacitance(1) (2)	10		µF

(1) These devices should be placed near the device they are bypassing, but preference should be given to the placement of the high-speed (HS) bypass caps.
(2) Only used on 32-bit wide DDR2 memory systems

7.10.2.7 High-Speed Bypass Capacitors

High-Speed (HS) bypass capacitors are critical for proper DDR2 interface operation. It is particularly important to minimize the parasitic series inductance of the HS bypass cap, DSP/DDR power, and DSP/DDR ground connections. Table 7-38 contains the specification for the HS bypass capacitors as well as for the power connections on the PCB.

7.10.2.8 Net Classes

Table 7-39 lists the clock net classes for the DDR2 interface. Table 7-40 lists the signal net classes, and associated clock net classes, for the signals in the DDR2 interface. These net classes are used for the termination and routing rules that follow.

Table 7-38. High-Speed Bypass Capacitors

No.	Parameter	Min	Max	Unit
1	HS Bypass Capacitor Package Size(1)		0402	10 Mils
2	Distance from HS bypass capacitor to device being bypassed		250	Mils
3	Number of connection vias for each HS bypass capacitor(2)	2		Vias
4	Trace length from bypass capacitor contact to connection via	1	30	Mils
5	Number of connection vias for each DSP device power or ground balls	1		Vias
6	Trace length from DSP device power ball to connection via		35	Mils
7	Number of connection vias for each DDR2 device power or ground balls	1		Vias
8	Trace length from DDR2 device power ball to connection via		35	Mils
9	DV_{DD18} HS Bypass Capacitor Count(3)	20		Devices
10	DV_{DD18} HS Bypass Capacitor Total Capacitance	1.2		µF
11	DDR#1 HS Bypass Capacitor Count(3)	8		Devices
12	DDR#1 HS Bypass Capacitor Total Capacitance	0.4		µF
13	DDR#2 HS Bypass Capacitor Count(3) (4)	8		Devices
14	DDR#2 HS Bypass Capacitor Total Capacitance(4)	0.4		µF

(1) LxW, 10 mil units, i.e., a 0402 is a 40x20 mil surface mount capacitor
(2) An additional HS bypass capacitor can share the connection vias only if it is mounted on the opposite side of the board.
(3) These devices should be placed as close as possible to the device being bypassed.
(4) Only used on 32-bit wide DDR2 memory systems

Copyright © 2007–2012, Texas Instruments Incorporated

Table 7-39. Clock Net Class Definitions

Clock Net Class	DSP Pin Names
CK	DDR_CLK/$\overline{\text{DDR_CLK}}$
DQS0	DDR_DQS0/$\overline{\text{DDR_DQS0}}$
DQS1	DDR_DQS1/$\overline{\text{DDR_DQS1}}$
DQS2(1)	DDR_DQS2/$\overline{\text{DDR_DQS2}}$
DQS3(1)	DDR_DQS3/$\overline{\text{DDR_DQS3}}$

(1) Only used on 32-bit wide DDR2 memory systems.

Table 7-40. Signal Net Class Definitions

Clock Net Class	Associated Clock Net Class	DSP Pin Names
ADDR_CTRL	CK	DDR_BA[2:0], DDR_A[14:0], $\overline{\text{DDR_CS}}$, $\overline{\text{DDR_CAS}}$, $\overline{\text{DDR_RAS}}$, $\overline{\text{DDR_WE}}$, DDR_CKE
DQ0	DQS0	DDR_DQ[7:0], DDR_DQM0
DQ1	DQS1	DDR_DQ[15:8], DDR_DQM1
DQ2(1)	DQS2	DDR_DQ[23:16], DDR_DQM2
DQ3(1)	DQS3	DDR_DQ[31:24], DDR_DQM3
DQGATEL	CK, DQS0, DQS1	DDR_DQGATE0, DDR_DQGATE1
DQGATEH (1)	CK, DQS2, DQS3	DDR_DQGATE2, DDR_DQGATE3

(1) Only used on 32-bit wide DDR2 memory systems.

7.10.2.9 DDR2 Signal Termination

No terminations of any kind are required in order to meet signal integrity and overshoot requirements. Serial terminators are permitted, if desired, to reduce EMI risk; however, serial terminations are the only type permitted. Table 7-41 shows the specifications for the series terminators.

Table 7-41. DDR2 Signal Terminations

No.	Parameter	Min	Typ	Max	Unit
1	CK Net Class(1)	0		10	Ω
2	ADDR_CTRL Net Class(1) (2) (3)	0	22	Zo	Ω
3	Data Byte Net Classes (DQS0-DQS3, DQ0-DQ3)(1) (2) (3) (4)	0	22	Zo	Ω
4	DQGATE Net Classes (DQGATEL, DQGATEH)(1) (2) (3)	0	10	Zo	Ω

(1) Only series termination is permitted, parallel or SST specifically disallowed.
(2) Terminator values larger than typical only recommended to address EMI issues.
(3) Termination value should be uniform across net class.
(4) When no termination is used on data lines (0 Ωs), the DDR2 devices must be programmed to operate in 60% strength mode.

Copyright © 2007–2012, Texas Instruments Incorporated

7.10.2.10 VREF Routing

VREF is used as a reference by the input buffers of the DDR2 memories as well as the DM6467's. VREF is intended to be 1/2 the DDR2 power supply voltage and should be created using a resistive divider as shown in Figure 7-28. Other methods of creating VREF are not recommended. Figure 7-31 shows the layout guidelines for VREF.

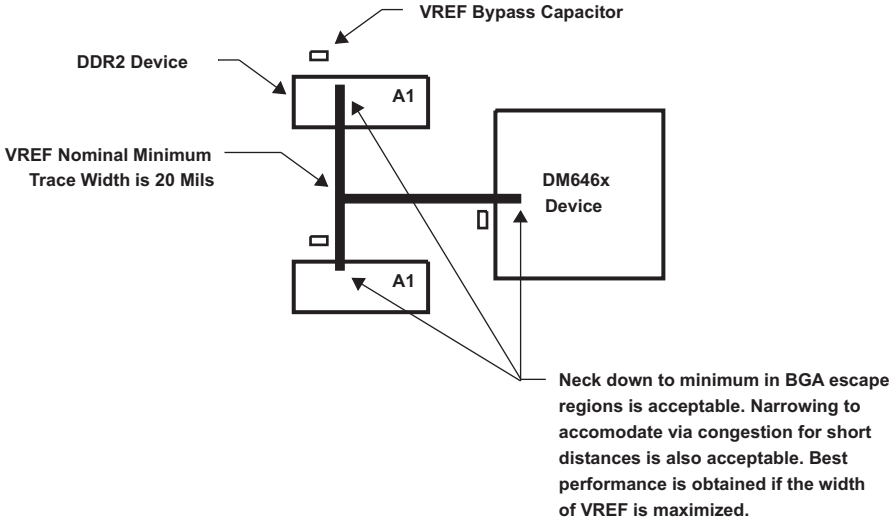

Figure 7-31. VREF Routing and Topology

7.10.2.11 DDR2 CK and ADDR_CTRL Routing

Figure 7-32 shows the topology of the routing for the CK and ADDR_CTRL net classes. The route is a balanced *T* as it is intended that the length of segments B and C be equal. In addition, the length of A should be maximized.

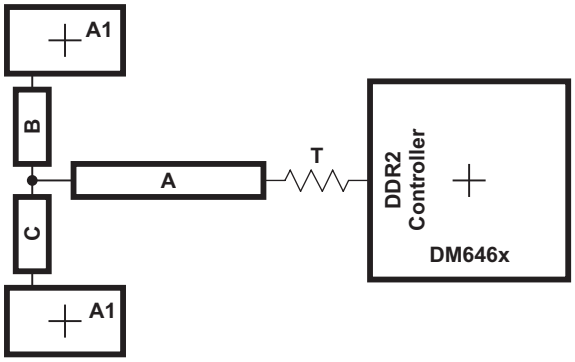

Figure 7-32. CK and ADDR_CTRL Routing and Topology

Table 7-42. CK and ADDR_CTRL Routing Specification (1)

No	Parameter	Min	Typ	Max	Unit
1	Center to center CK-$\overline{CK}$ spacing			2w	
2	CK A to B/A to C Skew Length Mismatch(1)			25	Mils
3	CK B to C Skew Length Mismatch			25	Mils
4	Center to center CK to other DDR2 trace spacing(2)	4w			
5	CK/ADDR_CTRL nominal trace length(3)	CACLM-50	CACLM	CACLM+50	Mils
6	ADDR_CTRL to CK Skew Length Mismatch			100	Mils
7	ADDR_CTRL to ADDR_CTRL Skew Length Mismatch			100	Mils
8	Center to center ADDR_CTRL to other DDR2 trace spacing(2)	4w			
9	Center to center ADDR_CTRL to other ADDR_CTRL trace spacing(2)	3w			
10	ADDR_CTRL A to B/A to C Skew Length Mismatch(1)			100	Mils
11	ADDR_CTRL B to C Skew Length Mismatch			100	Mils

(1) Series terminator, if used, should be located closest to DSP.
(2) Center to center spacing is allowed to fall to minimum (w) for up to 500 mils of routed length to accommodate BGA escape and routing congestion.
(3) CACLM is the longest Manhattan distance of the CK and ADDR_CTRL net classes.

Figure 7-33 shows the topology and routing for the DQS and DQ net classes; the routes are point to point. Skew matching across bytes is not needed nor recommended.

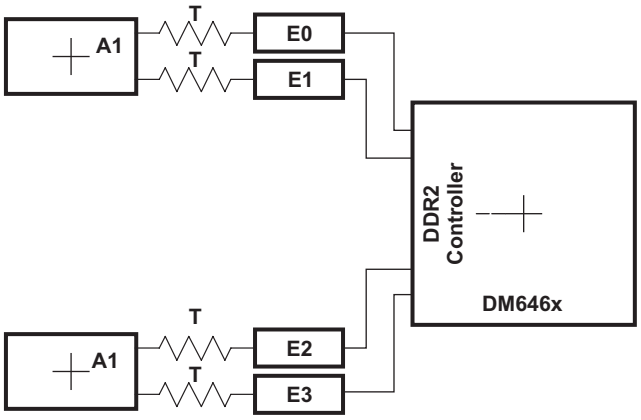

Figure 7-33. DQS and DQ Routing and Toplogy

Copyright © 2007–2012, Texas Instruments Incorporated

Table 7-43. DQS and DQ Routing Specification (1)

No.	Parameter	Min	Typ	Max	Unit
1	Center to center DQS-$\overline{DQS}$ spacing			2w	
2	DQS E Skew Length Mismatch			25	Mils
3	Center to center DQS to other DDR2 trace spacing(2)	4w			
4	DQS/DQ nominal trace length(1) (3) (4) (5)	DQLM-50	DQLM	DQLM+50	Mils
5	DQ to DQS Skew Length Mismatch(3) (4) (5)			100	Mils
6	DQ to DQ Skew Length Mismatch(3) (4) (5)			100	Mils
7	Center to center DQ to other DDR2 trace spacing(2) (6)	4w			
8	Center to center DQ to other DQ trace spacing(2) (7) (8)	3w			
9	DQ/DQS E Skew Length Mismatch(3) (4) (5)			100	Mils

(1) Series terminator, if used, should be located closest to DDR.
(2) Center to center spacing is allowed to fall to minimum (w) for up to 500 mils of routed length to accommodate BGA escape and routing congestion.
(3) A 16 bit DDR memory system will have two sets of data net classes, one for data byte 0, and one for data byte 1, each with an associated DQS (2 DQS's).
(4) A 32 bit DDR memory system will have four sets of data net classes, one each for data bytes 0 through 3, and each associated with a DQS (4 DQS's).
(5) There is no need and it is not recommended to skew match across data bytes, ie from DQS0 and data byte 0 to DQS1 and data byte 1.
(6) DQ's from other DQS domains are considered *other DDR2 trace*.
(7) DQ's from other data bytes are considered *other DDR2 trace*.
(8) DQLM is the longest Manhattan distance of each of the DQS and DQ net classes.

Figure 7-34 shows the routing for the DQGATE net classes. Table 7-44 contains the routing specification.

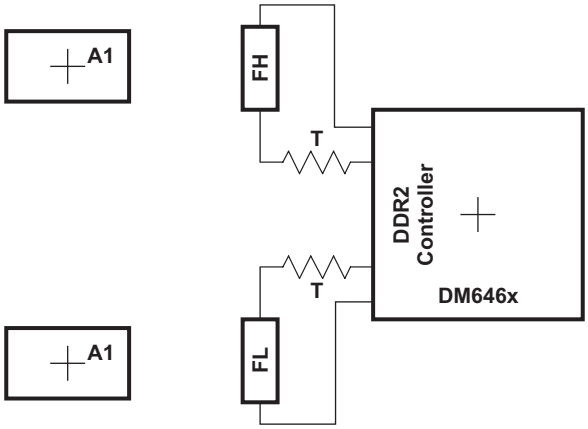

Figure 7-34. DQGATE Routing

Table 7-44. DQGATE Routing Specification

No.	Parameter	Min	Typ	Max	Unit
1	DQGATEL Length F(1)		CKB0B1		
2	DQGATEH Length F(2) (3)		CKB2B3		
3	Center to center DQGATE to any other trace spacing	4w			
4	DQS/DQ nominal trace length	DQLM-50	DQLM	DQLM+50	Mils
5	DQGATEL Skew(4)			100	Mils
6	DQGATEH Skew(3) (5)			100	Mils

(1) CKB0B1 is the sum of the length of the CK net plus the average length of the DQS0 and DQS1 nets.
(2) CKB2B3 is the sum of the length of the CK net plus the average length of the DQS2 and DQS3 nets.
(3) Only used in 32-bit wide DDR2 memory systems.
(4) Skew from CKB0B1
(5) Skew from CKB2B3

Copyright © 2007–2012, Texas Instruments Incorporated

7.11 Video Port Interface (VPIF)

The DM6467 Video Port Interface (VPIF) allows the capture and display of digital video streams. Features include:

- 99-MHz VPIF (-594 Devices *Only*) and 108-MHz VPIF (-729 Devices *Only*)
- Up to 2 Video Capture Channels (Channel 0 and Channel 1)
  - Two 8-bit Standard-Definition (SD) Video with embedded timing codes (BT.656)
  - Single 16-bit High-Definition (HD) Video with embedded timing codes (BT.1120)
  - Single Raw Video (8-/10-/12-bit)
- Up to 2 Video Display Channels (Channel 2 and Channel 3)
  - Two 8-bit SD Video Display with embedded timing codes (BT.656)
  - Single 16-bit HD Video Display with embedded timing codes (BT.1120)

The VPIF capture channel input data format is selectable based on the settings of the specific Channel Control Register (Channels 0–3). The VPIF Raw Video data-bus width is selectable based on the settings of the Channel 0 Control Register. For more detailed information on these specific Channel Control Registers, see the *TMS320DM646x DMSoC Video Port Interface (VPIF)* User's Guide (Literature Number SPRUER9).

7.11.1 VPIF Bus Master Memory Map

The VPIF peripheral includes a bus master interface that accesses the DM6467 system bus to transfer video-capture and video-display data. Table 7-45 shows the memory map for the VPIF master interface.

Table 7-45. VPIF Master Memory Map

START ADDRESS	END ADDRESS	SIZE (BYTES)	VPIF MASTER INTERFACE
0x0000 0000	0x7FFF FFFF	2G	Reserved
0x8000 0000	0x9FFF FFFF	512M	DDR2 Memory Controller
0xA000 0000	0xBFFF FFFF	512M	Reserved
0xC000 0000	0xFFFF FFFF	1G	Reserved

7.11.2 VPIF Clock Control (Capture and Display)

The source clocks for the VPIF data channels are selectable based on the settings of the VIDCLKCTL register (0x01C4 0038) (For the VIDCLKCTL register details, see Section 4.3.2.1, *Video Clock Control Register*). The VSCLKDIS register (0x01C4 006C) is used to disable the clock inputs when changing the clock source to ensure glitch-free operation. (For the VSCLKDIS register details, see Section 4.3.2.3, *Video and TSIF Clock Disable*).

For both the VPIF dual 8-bit or 16-bit video-capture modes, Channel 0 is always clocked by VP_CLKIN0 (see Figure 7-35).

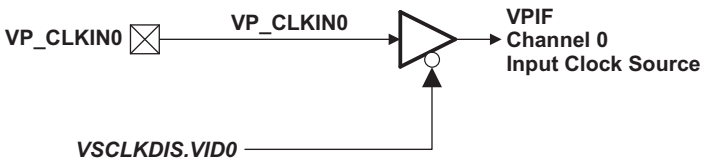

Figure 7-35. VPIF Capture Channel 0 Source Clock

Video-Capture Channel 1 is clocked by the VP_CLKIN1 signal, when the dual 8-bit capture mode is enabled. When the 16-bit capture mode or 8-/10-/12-bit raw-capture mode is used, VP_CLKIN0 ***must*** be selected as the clock source (VIDCLKCTL.VCH1CLK = 0) [see Figure 7-36].

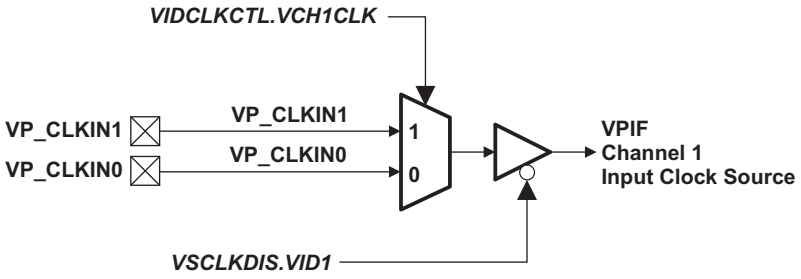

Figure 7-36. VPIF Capture Channel 1 Source Clock Selection

For both the dual 8-bit or 16-bit display modes, the VPIF Display Channel 2 outputs data synchronous to VP_CLKO2. The source clock for the VP_CLKO2 output is selectable from a number of external clock inputs or on-chip clock sources (see Figure 7-37).

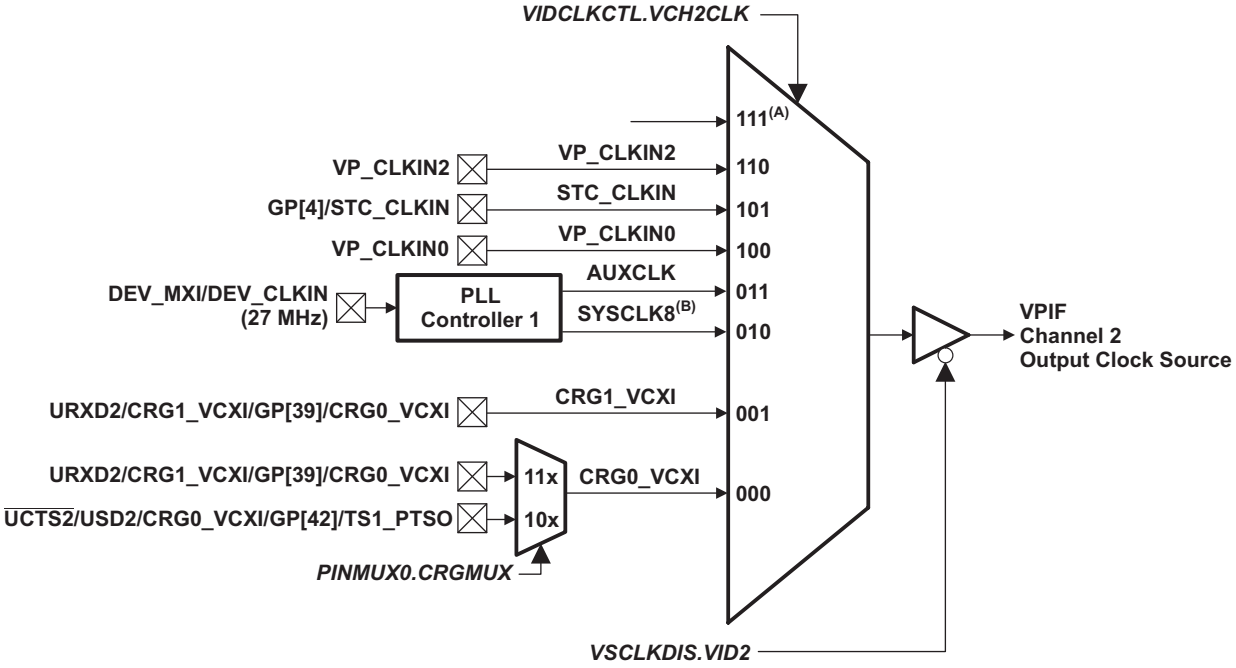

(A) 111 = Reserved.
(B) For the -729 devices, use an external clock source for the 54-/74.25-/108-MHz VPIF clock.

Figure 7-37. VPIF Display Channel 2 Source Clock Selection

For the dual 8-bit display mode, the VPIF Display Channel 3 outputs data synchronous to VP_CLKO3. The source clock for the VP_CLKO3 output is selectable from a number of external clock inputs or on-chip clock sources (see Figure 7-38). When the 16-bit display mode for Channel 3 is selected, the clock source ***must*** match that of Channel 2 (VIDCLKCTL.VCH3CLK = VCH2CLK).

Copyright © 2007–2012, Texas Instruments Incorporated

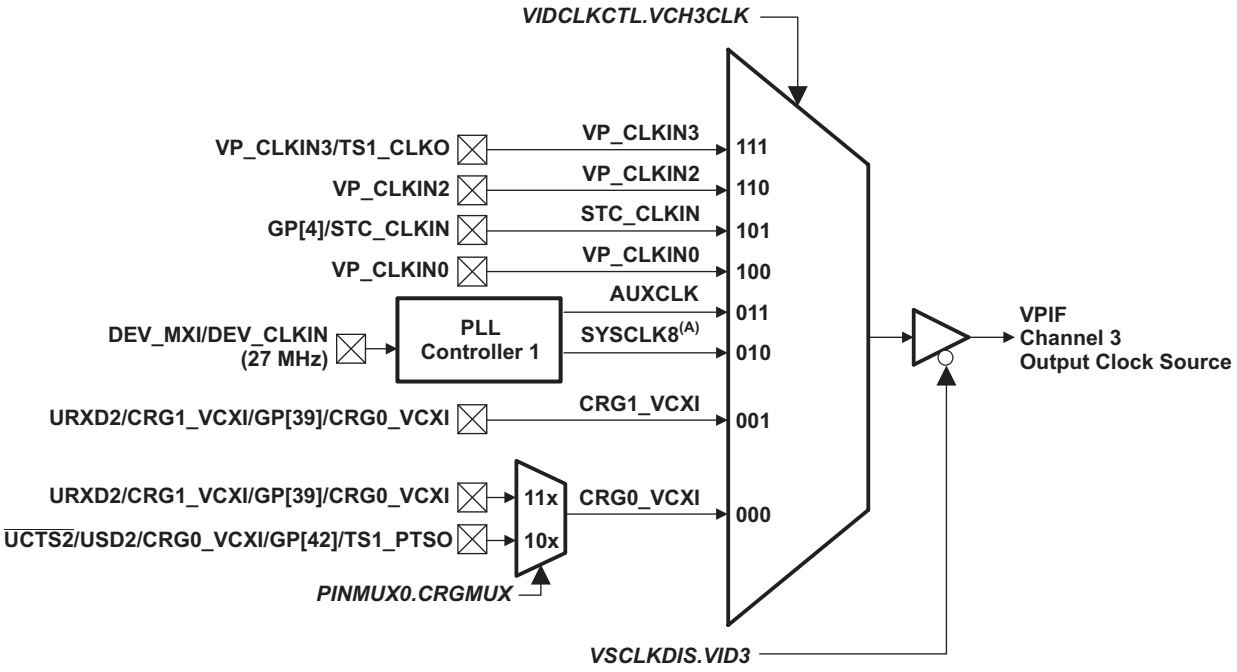

(A) For the -729 devices, use an external clock source for the 54-/74.25-/108-MHz VPIF clock.

Figure 7-38. VPIF Display Channel 3 Source Clock Selection

7.11.3 VPIF Register Descriptions

Table 7-46 shows the VPIF registers.

Table 7-46. Video Port Interface (VPIF) Registers

HEX ADDRESS RANGE	ACRONYM	REGISTER NAME
0x01C1 2000	PID	Peripheral identification register
0x01C1 2004	CH0_CTRL	Channel 0 control register
0x01C1 2008	CH1_CTRL	Channel 1 control register
0x01C1 200C	CH2_CTRL	Channel 2 control register
0x01C1 2010	CH3_CTRL	Channel 3 control register
0x01C1 2014 - 0x01C1 201F	-	Reserved
0x01C1 2020	INTEN	Interrupt enable
0x01C1 2024	INTENSET	Interrupt enable set
0x01C1 2028	INTENCLR	Interrupt enable clear
0x01C1 202C	INTSTAT	Interrupt status
0x01C1 2030	INTSTATCLR	Interrupt status clear
0x01C1 2034	EMU_CTRL	Emulation control
0x01C1 2038	DMA_SIZE	DMA size control
0x01C1 203C - 0x01C1 203F	-	Reserved
CAPTURE CHANNEL 0 REGISTERS		
0x01C1 2040	CH0_TY_STRTADR	Channel 0 Top Field luma buffer start address
0x01C1 2044	CH0_BY_STRTADR	Channel 0 Bottom Field luma buffer start address
0x01C1 2048	CH0_TC_STRTADR	Channel 0 Top Field chroma buffer start address
0x01C1 204C	CH0_BC_STRTADR	Channel 0 Bottom Field chroma buffer start address
0x01C1 2050	CH0_THA_STRTADR	Channel 0 Top Field horizontal ancillary data buffer start address
0x01C1 2054	CH0_BHA_STRTADR	Channel 0 Bottom Field horizontal ancillary data buffer start address
0x01C1 2058	CH0_TVA_STRTADR	Channel 0 Top Field vertical ancillary data buffer start address
0x01C1 205C	CH0_BVA_STRTADR	Channel 0 Bottom Field vertical ancillary data buffer start address
0x01C1 2060	CH0_SUBPIC_CFG	Channel 0 sub-picture configuration
0x01C1 2064	CH0_IMG_ADD_OFST	Channel 0 image data address offset
0x01C1 2068	CH0_HA_ADD_OFST	Channel 0 horizontal ancillary data address offset
0x01C1 206C	CH0_HSIZE_CFG	Channel 0 horizontal data size configuration
0x01C1 2070	CH0_VSIZE_CFG0	Channel 0 vertical data size configuration (0)
0x01C1 2074	CH0_VSIZE_CFG1	Channel 0 vertical data size configuration (1)
0x01C1 2078	CH0_VSIZE_CFG2	Channel 0 vertical data size configuration (2)
0x01C1 207C	CH0_VSIZE	Channel 0 vertical image size
CAPTURE CHANNEL 1 REGISTERS		
0x01C1 2080	CH1_TY_STRTADR	Channel 1 Top Field luma buffer start address
0x01C1 2084	CH1_BY_STRTADR	Channel 1 Bottom Field luma buffer start address
0x01C1 2088	CH1_TC_STRTADR	Channel 1 Top Field chroma buffer start address
0x01C1 208C	CH1_BC_STRTADR	Channel 1 Bottom Field chroma buffer start address
0x01C1 2090	CH1_THA_STRTADR	Channel 1 Top Field horizontal ancillary data buffer start address
0x01C1 2094	CH1_BHA_STRTADR	Channel 1 Bottom Field horizontal ancillary data buffer start address
0x01C1 2098	CH1_TVA_STRTADR	Channel 1 Top Field vertical ancillary data buffer start address
0x01C1 209C	CH1_BVA_STRTADR	Channel 1 Bottom Field vertical ancillary data buffer start address
0x01C1 20A0	CH1_SUBPIC_CFG	Channel 1 sub-picture configuration
0x01C1 20A4	CH1_IMG_ADD_OFST	Channel 1 image data address offset
0x01C1 20A8	CH1_HA_ADD_OFST	Channel 1 horizontal ancillary data address offset
0x01C1 20AC	CH1_HSIZE_CFG	Channel 1 horizontal data size configuration

Copyright © 2007–2012, Texas Instruments Incorporated

Table 7-46. Video Port Interface (VPIF) Registers (continued)

HEX ADDRESS RANGE	ACRONYM	REGISTER NAME
0x01C1 20B0	CH1_VSIZE_CFG0	Channel 1 vertical data size configuration (0)
0x01C1 20B4	CH1_VSIZE_CFG1	Channel 1 vertical data size configuration (1)
0x01C1 20B8	CH1_VSIZE_CFG2	Channel 1 vertical data size configuration (2)
0x01C1 20BC	CH1_VSIZE	Channel 1 vertical image size
DISPLAY CHANNEL 2 REGISTERS		
0x01C1 20C0	CH2_TY_STRTADR	Channel 2 Top Field luma buffer start address
0x01C1 20C4	CH2_BY_STRTADR	Channel 2 Bottom Field luma buffer start address
0x01C1 20C8	CH2_TC_STRTADR	Channel 2 Top Field chroma buffer start address
0x01C1 20CC	CH2_BC_STRTADR	Channel 2 Bottom Field chroma buffer start address
0x01C1 20D0	CH2_THA_STRTADR	Channel 2 Top Field horizontal ancillary data buffer start address
0x01C1 20D4	CH2_BHA_STRTADR	Channel 2 Bottom Field horizontal ancillary data buffer start address
0x01C1 20D8	CH2_TVA_STRTADR	Channel 2 Top Field vertical ancillary data buffer start address
0x01C1 20DC	CH2_BVA_STRTADR	Channel 2 Bottom Field vertical ancillary data buffer start address
0x01C1 20E0	CH2_SUBPIC_CFG	Channel 2 sub-picture configuration
0x01C1 20E4	CH2_IMG_ADD_OFST	Channel 2 image data address offset
0x01C1 20E8	CH2_HA_ADD_OFST	Channel 2 horizontal ancillary data address offset
0x01C1 20EC	CH2_HSIZE_CFG	Channel 2 horizontal data size configuration
0x01C1 20F0	CH2_VSIZE_CFG0	Channel 2 vertical data size configuration (0)
0x01C1 20F4	CH2_VSIZE_CFG1	Channel 2 vertical data size configuration (1)
0x01C1 20F8	CH2_VSIZE_CFG2	Channel 2 vertical data size configuration (2)
0x01C1 20FC	CH2_VSIZE	Channel 2 vertical image size
0x01C1 2100	CH2_THA_STRTPOS	Channel 2 Top Field horizontal ancillary data insertion start position
0x01C1 2104	CH2_THA_SIZE	Channel 2 Top Field horizontal ancillary data size
0x01C1 2108	CH2_BHA_STRTPOS	Channel 2 Bottom Field horizontal ancillary data insertion start position
0x01C1 210C	CH2_BHA_SIZE	Channel 2 Bottom Field horizontal ancillary data size
0x01C1 2110	CH2_TVA_STRTPOS	Channel 2 Top Field vertical ancillary data insertion start position
0x01C1 2114	CH2_TVA_SIZE	Channel 2 Top Field vertical ancillary data size
0x01C1 2118	CH2_BVA_STRTPOS	Channel 2 Bottom Field vertical ancillary data insertion start position
0x01C1 211C	CH2_BVA_SIZE	Channel 2 Bottom Field vertical ancillary data size
0x01C1 2120 - 0x01C1 213F	-	Reserved
DISPLAY CHANNEL 3 REGISTERS		
0x01C1 2140	CH3_TY_STRTADR	Channel 3 Field 0 luma buffer start address
0x01C1 2144	CH3_BY_STRTADR	Channel 3 Field 1 luma buffer start address
0x01C1 2148	CH3_TC_STRTADR	Channel 3 Field 0 chroma buffer start address
0x01C1 214C	CH3_BC_STRTADR	Channel 3 Field 1 chroma buffer start address
0x01C1 2150	CH3_THA_STRTADR	Channel 3 Field 0 horizontal ancillary data buffer start address
0x01C1 2154	CH3_BHA_STRTADR	Channel 3 Field 1 horizontal ancillary data buffer start address
0x01C1 2158	CH3_TVA_STRTADR	Channel 3 Field 0 vertical ancillary data buffer start address
0x01C1 215C	CH3_BVA_STRTADR	Channel 3 Field 1 vertical ancillary data buffer start address
0x01C1 2160	CH3_SUBPIC_CFG	Channel 3 sub-picture configuration
0x01C1 2164	CH3_IMG_ADD_OFST	Channel 3 image data address offset
0x01C1 2168	CH3_HA_ADD_OFST	Channel 3 horizontal ancillary data address offset
0x01C1 216C	CH3_HSIZE_CFG	Channel 3 horizontal data size configuration
0x01C1 2170	CH3_VSIZE_CFG0	Channel 3 vertical data size configuration (0)
0x01C1 2174	CH3_VSIZE_CFG1	Channel 3 vertical data size configuration (1)
0x01C1 2178	CH3_VSIZE_CFG2	Channel 3 vertical data size configuration (2)
0x01C1 217C	CH3_VSIZE	Channel 3 vertical image size

Copyright © 2007–2012, Texas Instruments Incorporated

Table 7-46. Video Port Interface (VPIF) Registers (continued)

HEX ADDRESS RANGE	ACRONYM	REGISTER NAME
0x01C1 2180	CH3_THA_STRTPOS	Channel 3 Top Field horizontal ancillary data insertion start position
0x01C1 2184	CH3_THA_SIZE	Channel 3 Top Field horizontal ancillary data size
0x01C1 2188	CH3_BHA_STRTPOS	Channel 3 Bottom Field horizontal ancillary data insertion start position
0x01C1 218C	CH3_BHA_SIZE	Channel 3 Bottom Field horizontal ancillary data size
0x01C1 2190	CH3_TVA_STRTPOS	Channel 3 Top Field vertical ancillary data insertion start position
0x01C1 2194	CH3_TVA_SIZE	Channel 3 Top Field vertical ancillary data size
0x01C1 2198	CH3_BVA_STRTPOS	Channel 3 Bottom Field vertical ancillary data insertion start position
0x01C1 219C	CH3_BVA_SIZE	Channel 3 Bottom Field vertical ancillary data size
0x01C1 21A0 - 0x01C1 21FF	-	Reserved

Copyright © 2007–2012, Texas Instruments Incorporated

7.11.4 VPIF Electrical Data/Timing

Table 7-47. Timing Requirements for VPIF VP_CLKINx Inputs(1) (see Figure 7-39)

NO.			-594		-729		UNIT
			MIN	MAX	MIN	MAX	
1	$t_{c(VKI)}$	Cycle time, VP_CLKIN0/1/2/3	10.1		9.25		ns
2	$t_{w(VKIH)}$	Pulse duration, VP_CLKINx high	0.4C		0.4C		ns
3	$t_{w(VKIL)}$	Pulse duration, VP_CLKINx low	0.4C		0.4C		ns
4	$t_{t(VKI)}$	Transition time, VP_CLKINx		5		5	ns

(1) C = VP_CLKINx period in ns.

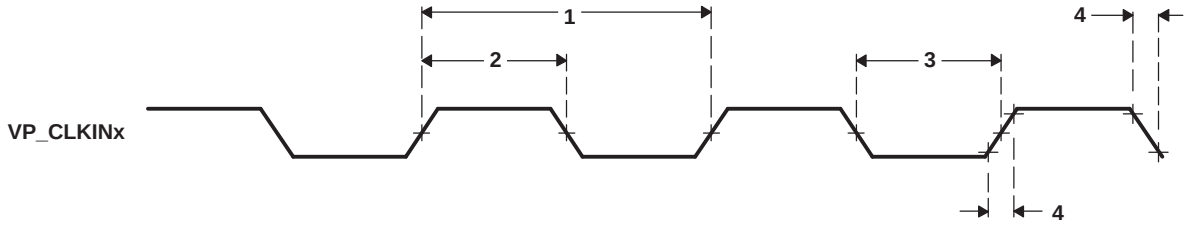

Figure 7-39. Video Port Capture VP_CLKINx Timing

Table 7-48. Timing Requirements for VPIF Channels 0/1 Video Capture Data and Control Inputs (see Figure 7-40)

NO.			-594		-729		UNIT
			MIN	MAX	MIN	MAX	
1	$t_{su(VDINV-VKIH)}$	Setup time, VP_DINx valid before VP_CLKIN0/1 high	3.3		2.55		ns
2	$t_{h(VKIH-VDINV)}$	Hold time, VP_DINx valid after VP_CLKIN0/1 high	0		0		ns

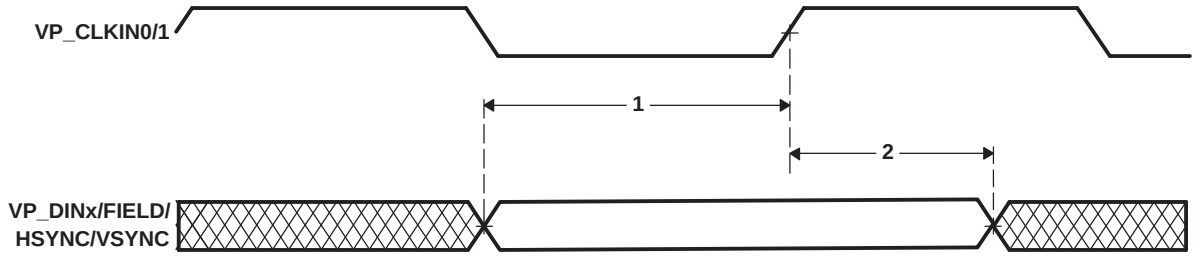

Figure 7-40. VPIF Channels 0/1 Video Capture Data and Control Input Timing

Table 7-49. Switching Characteristics Over Recommended Operating Conditions for Video Data Shown With Respect to VP_CLKO2/3 (1) (see Figure 7-41)

NO.	PARAMETER		-594		-729		UNIT
			MIN	MAX	MIN	MAX	
1	$t_{c(VKO)}$	Cycle time, VP_CLKO2/3	10.1		9.25		ns
2	$t_{w(VKOH)}$	Pulse duration, VP_CLKO2/3 high	0.4C		0.4C		ns
3	$t_{w(VKOL)}$	Pulse duration, VP_CLKO2/3 low	0.4C		0.4C		ns
4	$t_{t(VKO)}$	Transition time, VP_CLKO2/3		5		5	ns
11	$t_{d(VKOH-VPDOUTV)}$	Delay time, VP_CLKO2/3 high to VP_DOUTx valid		6.8		6.5	ns
12	$t_{d(VCLKOH-VPDOUTIV)}$	Delay time, VP_CLKO2/3 high to VP_DOUTx invalid	1.5		1.5		ns

(1) C = VP_CLKO2/3 period in ns.

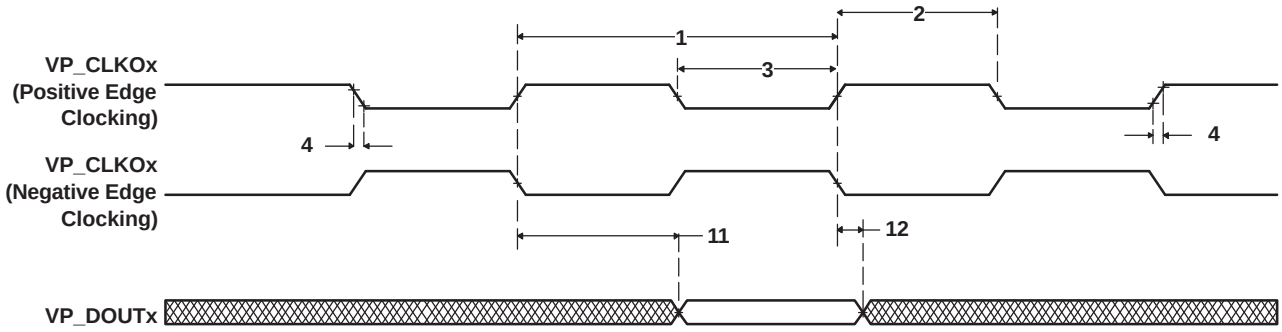

Figure 7-41. VPIF Channels 2/3 Video Display Data Output Timing With Respect to VP_CLKO2/3

Copyright © 2007–2012, Texas Instruments Incorporated

7.12 Transport Stream Interface (TSIF)

The DM6467 device includes two independent Transport Stream Interfaces (TSIF0 and TSIF1) with corresponding Clock Reference Generator (CRGEN) Modules for System Time-Clock Recovery. The TSIF peripheral supports the following features:

- 1-bit Serial and 8-bit Parallel independent receive and transmit interfaces with both synchronous and asynchronous modes. (**TSIF1 supports Serial mode *only***.)
- Stream input/output (I/O) speed rate configurable by the I/O clock speed
- ATS (absolute time stamp) detection, correction, and addition modes
- Automatically detects PAT and PMT *and* reflects assignment to the internal Packet Identification (PID) table (supported for partial Transfer Stream [TS] mode *only*; stream type and PID should be one-to-one mapping)
- PID filter with 7 PID filter tables and stream type assignments
- BYPASS mode implemented so that not only TS data, but any other data can be received or transmitted by the TSIF module
- Ring buffer control for both writes (8 channels) and reads (1 channel) to/from memory
- Supports “Specific Packet”, indicating boundary of plural program on TS
- Supports Full-TS in *only* one mode–Semi-Automatic-A mode, allowing communication to the C64x+ CPU.
- Supports Partial-TS in these modes–Semi-Automatic-B mode *and* Full-Automatic mode (provided stream type and PID are one-to-one mapping)

For more detailed information on the CRGEN peripheral, see the *TMS320DM646x DMSoC Clock Reference Generator* User's Guide (literature number SPRUEQ1).

7.12.1 TSIF Bus Master

The TSIF peripherals each include a bus master interface that accesses the DM646x system bus to transfer stream receive and transmit data. Table 7-50 shows the memory map for the TSIF master interfaces.

Table 7-50. TSIF0/1 Master Memory Map

START ADDRESS	END ADDRESS	SIZE (BYTES)	TSIF0/1 ACCESS
0x0000 0000	0x0FFF FFFF	256M	Reserved
0x1000 0000	0x1000 FFFF	64K	Reserved
0x1001 0000	0x1001 3FFF	16K	ARM RAM 0 (Data)
0x1001 4000	0x1001 7FFF	16K	ARM RAM 1 (Data)
0x1001 8000	0x1001 FFFF	32K	ARM ROM (Data)
0x1002 0000	0x10FF FFFF	16256K	Reserved
0x1100 0000	0x41FF FFFF	784M	
0x4200 0000	0x43FF FFFF	32M	EMIFA Data ($\overline{CS2}$)
0x4400 0000	0x45FF FFFF	32M	EMIFA Data ($\overline{CS3}$)
0x4600 0000	0x47FF FFFF	32M	EMIFA Data ($\overline{CS4}$)
0x4800 0000	0x49FF FFFF	32M	EMIFA Data ($\overline{CS5}$)
0x4A00 0000	0x4BFF FFFF	32M	Reserved
0x4C00 0000	0x4FFF FFFF	64M	VLYNQ (Remote Data)
0x5000 0000	0x7FFF FFFF	768M	Reserved
0x8000 0000	0x9FFF FFFF	512M	DDR2 Memory Controller
0xA000 0000	0xBFFF FFFF	512M	Reserved
0xC000 0000	0xFFFF FFFF	1G	Reserved

Copyright © 2007–2012, Texas Instruments Incorporated

7.12.2 TSIF Clock Control

The source clocks for the TSIF counters and output channels are selectable based on the settings of the TSIFCTL register (0x01C4 0050). (For more detailed information on the TSIFCTL register, see Section 4.3.2.2, *TSIF Control*.) The VSCLKDIS register (0x01C4 006C) is used to disable the clock inputs when changing the clock source to ensure glitch-free operation. (For more detailed informaiton on the VSCLKDIS register, see Section 4.3.2.3, *Video and TSIF Clock Disable*.)

TSIF0 outputs data synchronous to TS0_CLKO. The source clock for the TS0_CLKO output is selectable from among a number of external clock inputs or on-chip clock sources (see Figure 7-42).

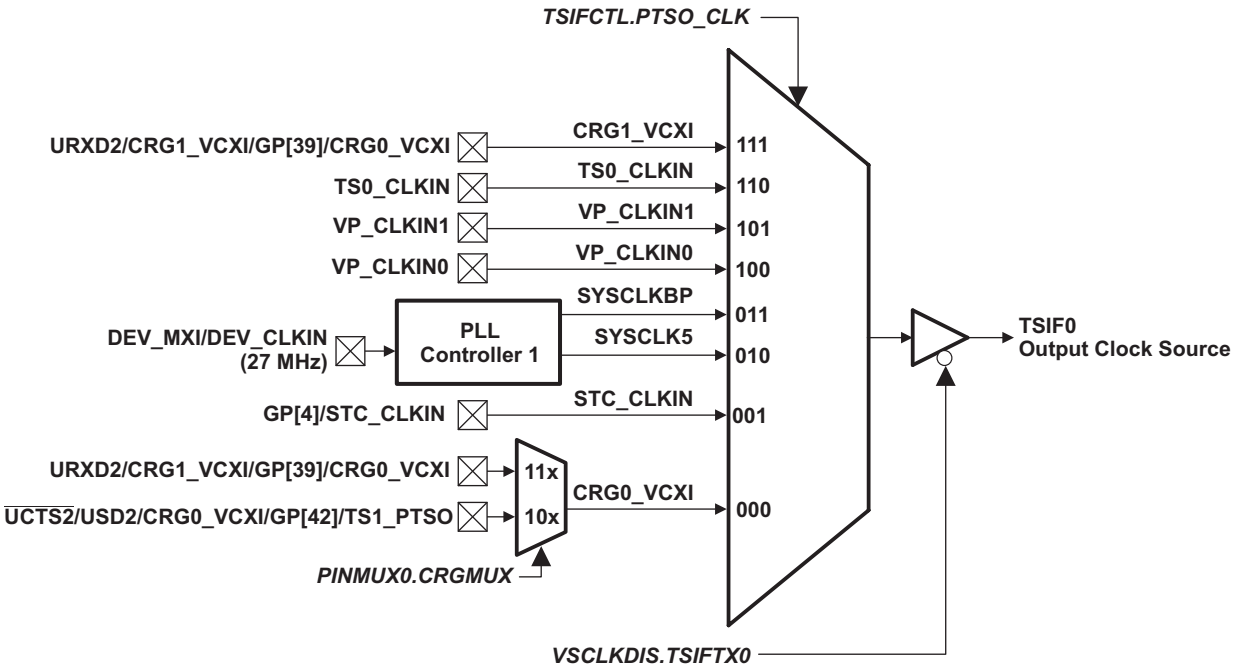

Figure 7-42. TSIF0 Output Clock Source Selection

The TSIF0 system time counter may be clocked from a number of external clock inputs or on-chip clock sources (see Figure 7-43).

Copyright © 2007–2012, Texas Instruments Incorporated

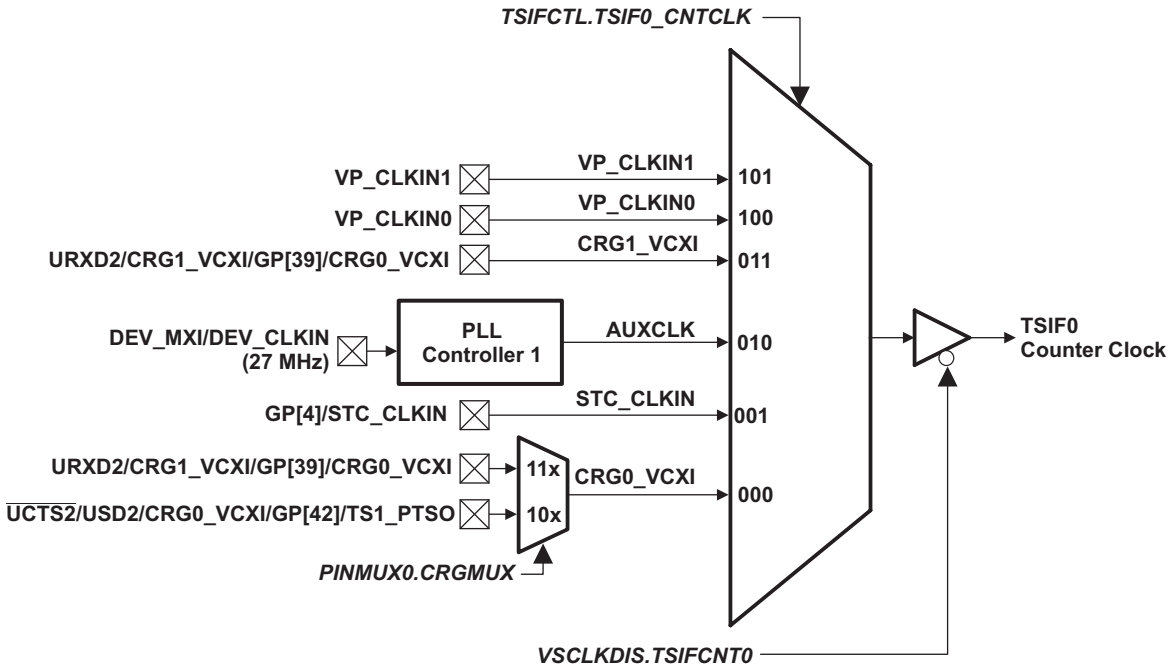

(A) 110, 111 = Reserved.

Figure 7-43. TSIF0 Counter Clock Selection

TSIF1 outputs data synchronous to TS1_CLKO. The source clock for the TS1_CLKO output is selectable from among a number of external clock inputs or on-chip clock sources (see Figure 7-44).

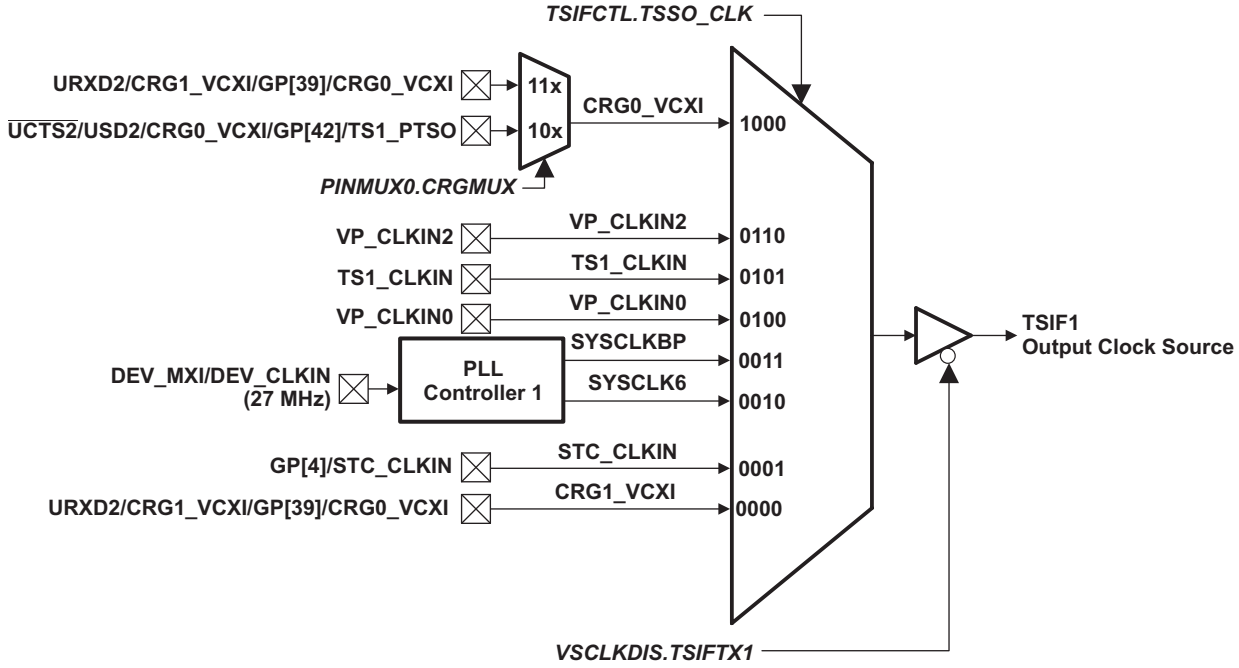

(A) 0111, 1001–1xx1 = Reserved.

Figure 7-44. TSIF1 Output Clock Source Selection

The TSIF1 system time counter may be clocked from a number of external clock inputs or on-chip clock sources (see Figure 7-45).

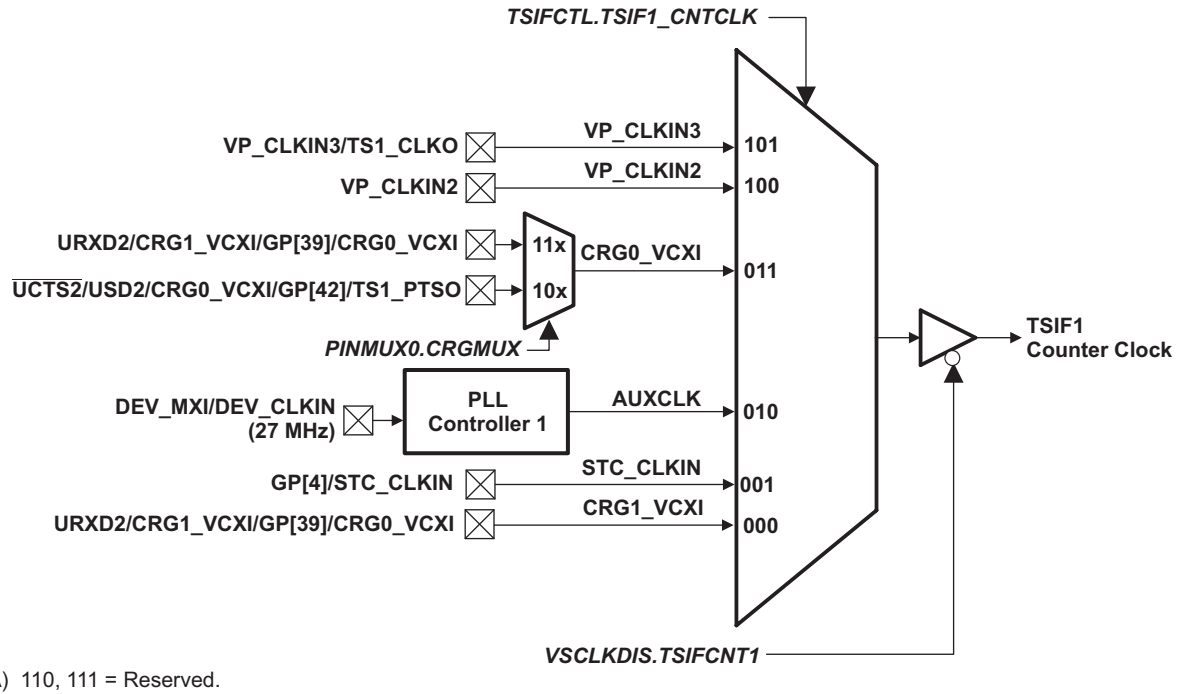

(A) 110, 111 = Reserved.

Figure 7-45. TSIF1 Counter Clock Selection

7.12.3 TSIF Peripheral Register Description(s)

The TSIF0 and TSIF1 registers are shown in Table 7-51 and Table 7-52, respectively.

Table 7-51. TSIF0 Registers

HEX ADDRESS RANGE	ACRONYM	REGISTER NAME
0x01C1 3000	PID	TSIF0 peripheral identification (PID) register
0x01C1 3004	CTRL0	Control register 0 register
0x01C1 3008	CTRL1	Control register 1 register
0x01C1 300C	INTEN	Interrupt enable register
0x01C1 3010	INTEN_SET	Interrupt enable set register
0x01C1 3014	INTEN_CLR	Interrupt enable clear register
0x01C1 3018	INTSTAT	Interrupt status register
0x01C1 301C	INTSTAT_CLR	Interrupt status clear register
0x01C1 3020	EMU_CTRL	Emulation control register
0x01C1 3024	ASYNC_TX_WAIT	Asynchronous transmit wait time register
0x01C1 3028	PAT_SEN_CFG	Program association table (PAT) sense configuration register
0x01C1 302C	PAT_STR_ADDR	PAT store address register
0x01C1 3030	PMT_SEN_CFG	Program map table (PMT) sense configuration register
0x01C1 3034	PMT_STR_ADDR	PMT store address register
0x01C1 3038	BSP_IN	Boundary sensing packet (BSP) in register
0x01C1 303C	BSP_STORE_ADDR	BSP in store address register
0x01C1 3040	PCR_SENSE_CFG	Program clock reference (PCR) sense configuration register
0x01C1 3044	PID0_FILT_CFG	Packet Identifier (PID) 0 (PID0) filter configuration register
0x01C1 3048	PID1_FILT_CFG	PID1 filter configuration register
0x01C1 304C	PID2_FILT_CFG	PID2 filter configuration register
0x01C1 3050	PID3_FILT_CFG	PID3 filter configuration register
0x01C1 3054	PID4_FILT_CFG	PID4 filter configuration register

Copyright © 2007–2012, Texas Instruments Incorporated

Table 7-51. TSIF0 Registers (continued)

HEX ADDRESS RANGE	ACRONYM	REGISTER NAME
0x01C1 3058	PID5_FILT_CFG	PID5 filter configuration register
0x01C1 305C	PID6_FILT_CFG	PID6 filter configuration register
0x01C1 3060	BYPASS_CFG	Bypass mode configuration register
0x01C1 3064	TX_ATS_INIT	Transmit Arrival Time Stamp (ATS) initialization register
0x01C1 3068	TX_ATS_MON	Transmit ATS monitor register
0x01C1 306C	–	Reserved
0x01C1 3070	RX_PKT_STAT	Receive packet status register
0x01C1 3074 - 0x01C1 307F	–	Reserved
0x01C1 3080	STC_INIT_CTRL	System Time Clock (STC) initialization control register
0x01C1 3084	STC_INIT_VAL	STC initialization value register
0x01C1 3088	STC_INT0	STC interrupt entry 0 register
0x01C1 308C	STC_INT1	STC interrupt entry 1 register
0x01C1 3090	STC_INT2	STC interrupt entry 2 register
0x01C1 3094	STC_INT3	STC interrupt entry 3 register
0x01C1 3098	STC_INT4	STC interrupt entry 4 register
0x01C1 309C	STC_INT5	STC interrupt entry 5 register
0x01C1 30A0	STC_INT6	STC interrupt entry 6 register
0x01C1 30A4	STC_INT7	STC interrupt entry 7 register
0x01C1 30A8 - 0x01C1 30BF	–	Reserved
0x01C1 30C0	WRB_CTRL	Write ring buffer channel control register
0x01C1 30C4	WRB0_STRT_ADDR	Write ring buffer channel 0 start address register
0x01C1 30C8	WRB0_END_ADDR	Write ring buffer channel 0 end address register
0x01C1 30CC	WRB0_RDPTR	Write ring buffer channel 0 read pointer register
0x01C1 30D0	WRB0_SUB	Write ring buffer channel 0 subtraction register
0x01C1 30D4	WRB0_WRPTR	Write ring buffer channel 0 write pointer register
0x01C1 30D8 - 0x01C1 30DF	–	Reserved
0x01C1 30E0	WRB1_STRT_ADDR	Write ring buffer channel 1 start address register
0x01C1 30E4	WRB1_END_ADDR	Write ring buffer channel 1 end address register
0x01C1 30E8	WRB1_RDPTR	Write ring buffer channel 1 read pointer register
0x01C1 30EC	WRB1_SUB	Write ring buffer channel 1 subtraction register
0x01C1 30F0	WRB1_WRPTR	Write ring buffer channel 1 write pointer register
0x01C1 30F4 - 0x01C1 30FF	–	Reserved
0x01C1 3100	WRB2_STRT_ADDR	Write ring buffer channel 2 start address register
0x01C1 3104	WRB2_END_ADDR	Write ring buffer channel 2 end address register
0x01C1 3108	WRB2_RDPTR	Write ring buffer channel 2 read pointer register
0x01C1 310C	WRB2_SUB	Write ring buffer channel 2 subtraction register
0x01C1 3110	WRB2_WRPTR	Write ring buffer channel 2 write pointer register
0x01C1 3114 - 0x01C1 311F	–	Reserved
0x01C1 3120	WRB3_STRT_ADDR	Write ring buffer channel 3 start address register
0x01C1 3124	WRB3_END_ADDR	Write ring buffer channel 3 end address register
0x01C1 3128	WRB3_RDPTR	Write ring buffer channel 3 read pointer register
0x01C1 312C	WRB3_SUB	Write ring buffer channel 3 subtraction register
0x01C1 3130	WRB3_WRPTR	Write ring buffer channel 3 write pointer register
0x01C1 3134 - 0x01C1 313F	–	Reserved
0x01C1 3140	WRB4_STRT_ADDR	Write ring buffer channel 4 start address register
0x01C1 3144	WRB4_END_ADDR	Write ring buffer channel 4 end address register
0x01C1 3148	WRB4_RDPTR	Write ring buffer channel 4 read pointer register

Copyright © 2007–2012, Texas Instruments Incorporated

Table 7-51. TSIF0 Registers (continued)

HEX ADDRESS RANGE	ACRONYM	REGISTER NAME
0x01C1 314C	WRB4_SUB	Write ring buffer channel 4 subtraction register
0x01C1 3150	WRB4_WRPTR	Write ring buffer channel 4 write pointer register
0x01C1 3154 - 0x01C1 315F	–	Reserved
0x01C1 3160	WRB5_STRT_ADDR	Write ring buffer channel 5 start address register
0x01C1 3164	WRB5_END_ADDR	Write ring buffer channel 5 end address register
0x01C1 3168	WRB5_RDPTR	Write ring buffer channel 5 read pointer register
0x01C1 316C	WRB5_SUB	Write ring buffer channel 5 subtraction register
0x01C1 3170	WRB5_WRPTR	Write ring buffer channel 5 write pointer register
0x01C1 3174 - 0x01C1 317F	–	Reserved
0x01C1 3180	WRB6_STRT_ADDR	Write ring buffer channel 6 start address register
0x01C1 3184	WRB6_END_ADDR	Write ring buffer channel 6 end address register
0x01C1 3188	WRB6_RDPTR	Write ring buffer channel 6 read pointer register
0x01C1 318C	WRB6_SUB	Write ring buffer channel 6 subtraction register
0x01C1 3190	WRB6_WRPTR	Write ring buffer channel 6 write pointer register
0x01C1 3194 - 0x01C1 319F	–	Reserved
0x01C1 31A0	WRB7_STRT_ADDR	Write ring buffer channel 7 start address register
0x01C1 31A4	WRB7_END_ADDR	Write ring buffer channel 7 end address register
0x01C1 31A8	WRB7_RDPTR	Write ring buffer channel 7 read pointer register
0x01C1 31AC	WRB7_SUB	Write ring buffer channel 7 subtraction register
0x01C1 31B0	WRB7_WRPTR	Write ring buffer channel 7 write pointer register
0x01C1 31B4 - 0x01C1 31BF	–	Reserved
0x01C1 31C0	RRB_CTRL	Read ring buffer channel control register
0x01C1 31C4	RRB_STRT_ADDR	Read ring buffer channel start address register
0x01C1 31C8	RRB_END_ADDR	Read ring buffer channel end address register
0x01C1 31CC	RRB_WRPTR	Read ring buffer channel write pointer register
0x01C1 31D0	RRB_SUB	Read ring buffer channel subtraction register
0x01C1 31D4	RRB_RDPTR	Read ring buffer channel read pointer register
0x01C1 31D8	PKT_CNT	Packet counter value register
0x01C1 31DC - 0x01C1 31FF	–	Reserved

Table 7-52. TSIF1 Registers

HEX ADDRESS RANGE	ACRONYM	REGISTER NAME
0x01C1 3400	PID	TSIF1 peripheral identification (PID) register
0x01C1 3404	CTRL0	Control register 0 register
0x01C1 3408	CTRL1	Control register 1 register
0x01C1 340C	INTEN	Interrupt enable register
0x01C1 3410	INTEN_SET	Interrupt enable set register
0x01C1 3414	INTEN_CLR	Interrupt enable clear register
0x01C1 3418	INTSTAT	Interrupt status register
0x01C1 341C	INTSTAT_CLR	Interrupt status clear register
0x01C1 3420	EMU_CTRL	Emulation control register
0x01C1 3424	ASYNC_TX_WAIT	Asynchronous transmit wait time register
0x01C1 3428	PAT_SEN_CFG	Program association table (PAT) sense configuration register
0x01C1 342C	PAT_STR_ADDR	PAT store address register
0x01C1 3430	PMT_SEN_CFG	Program map table (PMT) sense configuration register
0x01C1 3434	PMT_STR_ADDR	PMT store address register
0x01C1 3438	BSP_IN	Boundary sensing packet (BSP) in register

Copyright © 2007–2012, Texas Instruments Incorporated

Table 7-52. TSIF1 Registers (continued)

HEX ADDRESS RANGE	ACRONYM	REGISTER NAME
0x01C1 343C	BSP_STORE_ADDR	BSP in store address register
0x01C1 3440	PCR_SENSE_CFG	Program clock reference (PCR) sense configuration register
0x01C1 3444	PID0_FILT_CFG	Packet Identifier (PID) 0 (PID0) filter configuration register
0x01C1 3448	PID1_FILT_CFG	PID1 filter configuration register
0x01C1 344C	PID2_FILT_CFG	PID2 filter configuration register
0x01C1 3450	PID3_FILT_CFG	PID3 filter configuration register
0x01C1 3454	PID4_FILT_CFG	PID4 filter configuration register
0x01C1 3458	PID5_FILT_CFG	PID5 filter configuration register
0x01C1 345C	PID6_FILT_CFG	PID6 filter configuration register
0x01C1 3460	BYPASS_CFG	Bypass mode configuration register
0x01C1 3064	TX_ATS_INIT	Transmit Arrival Time Stamp (ATS) initialization register
0x01C1 3468	TX_ATS_MON	Transmit ATS monitor register
0x01C1 346C	–	Reserved
0x01C1 3470	RX_PKT_STAT	Receive packet status register
0x01C1 3474 - 0x01C1 347F	–	Reserved
0x01C1 3480	STC_INIT_CTRL	System Time Clock (STC) initialization control register
0x01C1 3484	STC_INIT_VAL	STC initialization value register
0x01C1 3488	STC_INT0	STC interrupt entry 0 register
0x01C1 348C	STC_INT1	STC interrupt entry 1 register
0x01C1 3490	STC_INT2	STC interrupt entry 2 register
0x01C1 3494	STC_INT3	STC interrupt entry 3 register
0x01C1 3498	STC_INT4	STC interrupt entry 4 register
0x01C1 349C	STC_INT5	STC interrupt entry 5 register
0x01C1 34A0	STC_INT6	STC interrupt entry 6 register
0x01C1 34A4	STC_INT7	STC interrupt entry 7 register
0x01C1 34A8 - 0x01C1 34BF	–	Reserved
0x01C1 34C0	WRB_CTRL	Write ring buffer channel control register
0x01C1 34C4	WRB0_STRT_ADDR	Write ring buffer channel 0 start address register
0x01C1 34C8	WRB0_END_ADDR	Write ring buffer channel 0 end address register
0x01C1 34CC	WRB0_RDPTR	Write ring buffer channel 0 read pointer register
0x01C1 34D0	WRB0_SUB	Write ring buffer channel 0 subtraction register
0x01C1 34D4	WRB0_WRPTR	Write ring buffer channel 0 write pointer register
0x01C1 34D8 - 0x01C1 34DF	–	Reserved
0x01C1 34E0	WRB1_STRT_ADDR	Write ring buffer channel 1 start address register
0x01C1 34E4	WRB1_END_ADDR	Write ring buffer channel 1 end address register
0x01C1 34E8	WRB1_RDPTR	Write ring buffer channel 1 read pointer register
0x01C1 34EC	WRB1_SUB	Write ring buffer channel 1 subtraction register
0x01C1 34F0	WRB1_WRPTR	Write ring buffer channel 1 write pointer register
0x01C1 34F4 - 0x01C1 34FF	–	Reserved
0x01C1 3500	WRB2_STRT_ADDR	Write ring buffer channel 2 start address register
0x01C1 3504	WRB2_END_ADDR	Write ring buffer channel 2 end address register
0x01C1 3508	WRB2_RDPTR	Write ring buffer channel 2 read pointer register
0x01C1 350C	WRB2_SUB	Write ring buffer channel 2 subtraction register
0x01C1 3510	WRB2_WRPTR	Write ring buffer channel 2 write pointer register
0x01C1 3514 - 0x01C1 351F	–	Reserved
0x01C1 3520	WRB3_STRT_ADDR	Write ring buffer channel 3 start address register
0x01C1 3524	WRB3_END_ADDR	Write ring buffer channel 3 end address register

Copyright © 2007–2012, Texas Instruments Incorporated

Table 7-52. TSIF1 Registers (continued)

HEX ADDRESS RANGE	ACRONYM	REGISTER NAME
0x01C1 3528	WRB3_RDPTR	Write ring buffer channel 3 read pointer register
0x01C1 352C	WRB3_SUB	Write ring buffer channel 3 subtraction register
0x01C1 3530	WRB3_WRPTR	Write ring buffer channel 3 write pointer register
0x01C1 3534 - 0x01C1 353F	–	Reserved
0x01C1 3540	WRB4_STRT_ADDR	Write ring buffer channel 4 start address register
0x01C1 3544	WRB4_END_ADDR	Write ring buffer channel 4 end address register
0x01C1 3548	WRB4_RDPTR	Write ring buffer channel 4 read pointer register
0x01C1 354C	WRB4_SUB	Write ring buffer channel 4 subtraction register
0x01C1 3550	WRB4_WRPTR	Write ring buffer channel 4 write pointer register
0x01C1 3554 - 0x01C1 355F	–	Reserved
0x01C1 3560	WRB5_STRT_ADDR	Write ring buffer channel 5 start address register
0x01C1 3564	WRB5_END_ADDR	Write ring buffer channel 5 end address register
0x01C1 3568	WRB5_RDPTR	Write ring buffer channel 5 read pointer register
0x01C1 356C	WRB5_SUB	Write ring buffer channel 5 subtraction register
0x01C1 3570	WRB5_WRPTR	Write ring buffer channel 5 write pointer register
0x01C1 3574 - 0x01C1 357F	–	Reserved
0x01C1 3580	WRB6_STRT_ADDR	Write ring buffer channel 6 start address register
0x01C1 3584	WRB6_END_ADDR	Write ring buffer channel 6 end address register
0x01C1 3588	WRB6_RDPTR	Write ring buffer channel 6 read pointer register
0x01C1 358C	WRB6_SUB	Write ring buffer channel 6 subtraction register
0x01C1 3590	WRB6_WRPTR	Write ring buffer channel 6 write pointer register
0x01C1 3594 - 0x01C1 359F	–	Reserved
0x01C1 35A0	WRB7_STRT_ADDR	Write ring buffer channel 7 start address register
0x01C1 35A4	WRB7_END_ADDR	Write ring buffer channel 7 end address register
0x01C1 35A8	WRB7_RDPTR	Write ring buffer channel 7 read pointer register
0x01C1 35AC	WRB7_SUB	Write ring buffer channel 7 subtraction register
0x01C1 35B0	WRB7_WRPTR	Write ring buffer channel 7 write pointer register
0x01C1 35B4 - 0x01C1 35BF	–	Reserved
0x01C1 35C0	RRB_CTRL	Read ring buffer channel control register
0x01C1 35C4	RRB_STRT_ADDR	Read ring buffer channel start address register
0x01C1 35C8	RRB_END_ADDR	Read ring buffer channel end address register
0x01C1 35CC	RRB_WRPTR	Read ring buffer channel write pointer register
0x01C1 35D0	RRB_SUB	Read ring buffer channel subtraction register
0x01C1 35D4	RRB_RDPTR	Read ring buffer channel read pointer register
0x01C1 35D8	PKT_CNT	Packet counter value register
0x01C1 35DC - 0x01C1 35FF	–	Reserved

Copyright © 2007–2012, Texas Instruments Incorporated

7.12.4 Transport Stream Interface (TSIF) Electrical Data/Timing

Table 7-53. Timing Requirements for TSIF Input (see Figure 7-46)

NO.				-594, -729				UNIT
				SERIAL INPUT		PARALLEL INPUT(1)		
				MIN	MAX	MIN	MAX	
1	$t_{c(TSCLKIN)}$	Cycle time, TSx_CLKIN		10		16.7		ns
2	$t_{w(TSCLKIN)}$	Pulse duration, TSx_CLKIN high/low(2)		0.4C		0.4C		ns
3	$t_{t(TSCLKIN)}$	Transition time, TSx_CLKIN			3(3)		3(3)	ns
4	$t_{su(TSDATAIN-TSCLKINV)}$	Setup time, TSx_CTL/TSx_DATA(4) input valid before TSx_CLKIN edge	All Others	4		4		ns
			TSx_WAIT IN	13		13		ns
5	$t_{h(TSCLKINV-TSDATAIN)}$	Hold time, TSx_CTL/TSx_DATA(4) input valid after TSx_CLKIN edge		0		0		ns

(1) TSIF1 supports SERIAL INPUT mode *only*.
(2) C = TSx_CLKIN period (cycle time) in ns.
(3) For a 4-inch transmission line with 4-pF load capacitance at the device pin.
(4) TSx_CTL/TSx_DATA input includes: TS0_EN_WAITO, TS0_WAITIN, TS0_PSTIN, and TS0_DIN[7:0] for a parallel input. For a serial input, TSx_CTL/TSx_DATA input includes: TSx_EN_WAITO, TSx_WAITIN, TSx_PSTIN, and TS0_DIN7 or TS1_DIN.

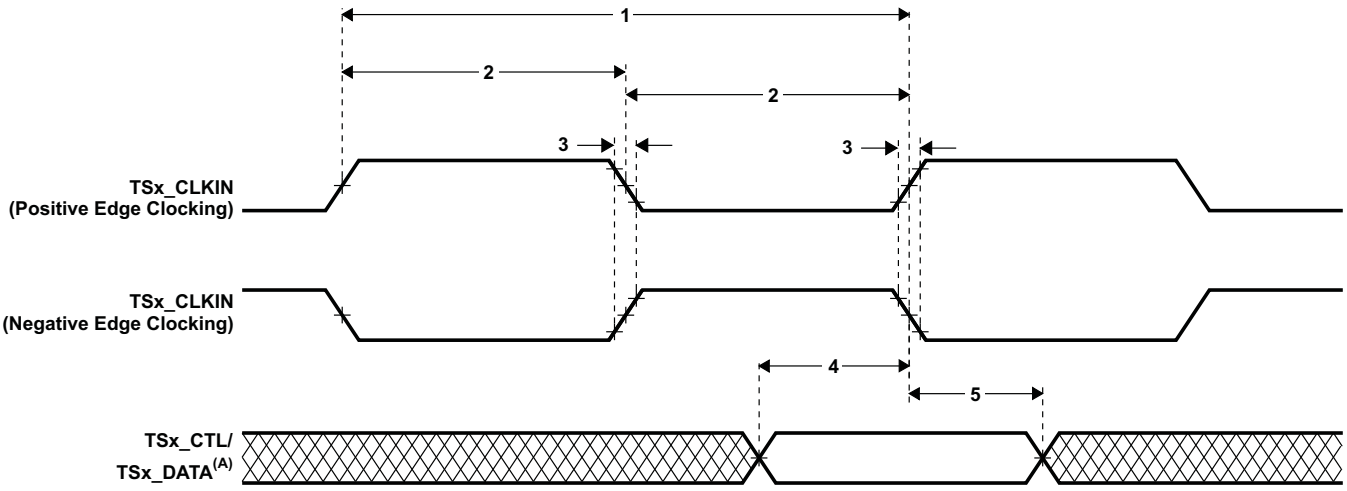

A. TSx_CTL/TSx_DATA input includes: TS0_EN_WAITO, TS0_WAITIN, TS0_PSTIN, and TS0_DIN[7:0] for a parallel input. For a serial input, TSx_CTL/TSx_DATA input includes: TSx_EN_WAITO, TSx_WAITIN, TSx_PSTIN, and TS0_DIN7 or TS1_DIN.

Figure 7-46. TSIF Input Timing

Table 7-54. Switching Characteristics Over Recommended Operating Conditions for TSIF Output (see Figure 7-47)

NO.			-594, -729				UNIT
			SERIAL OUTPUT		PARALLEL OUTPUT(1)		
			MIN	MAX	MIN	MAX	
6	$t_{c(TSCLKO)}$	Cycle time, TSx_CLKO	10		16.7		ns
7	$t_{w(TSCLKO)}$	Pulse duration, TSx_CLKO high/low(2)	0.4C		0.4C		ns
8	$t_{t(TSCLKO)}$	Transition time, TSx_CLKO		3(3)		3(3)	ns

(1) TSIF1 supports SERIAL OUTPUT mode *only*.
(2) C = TSx_CLKO period (cycle time) in ns.
(3) For a 4-inch transmission line with 4-pF load capacitance at the device pin.

Copyright © 2007–2012, Texas Instruments Incorporated

Table 7-54. Switching Characteristics Over Recommended Operating Conditions for TSIF Output (see Figure 7-47) (continued)

NO.				-594, -729				UNIT
				SERIAL OUTPUT		PARALLEL OUTPUT(1)		
				MIN	MAX	MIN	MAX	
9	$t_{d(TSCLKOV-TSDATAO)}$	Delay time, TSx_CLKO edge to TSx_CTL/TSx_DATA(4) output valid	All Others	1	7.5	1	7.5	ns
			TS0_WAITO, TSx_EN_WAITO	1	16.5	1	16.5	ns

(4) TSx_CTL/TSx_DATA output includes: TS0_ENAO, TS0_WAITO, TS0_PSTO, and TS0_DOUT[7:0] for a parallel output. For a serial output, TSx_CTL/TSx_DATA output includes: TSx_ENAO, TSx_EN_WAITO, TSx_PSTO, and TS0_DOUT7 or TS1_DOUT.

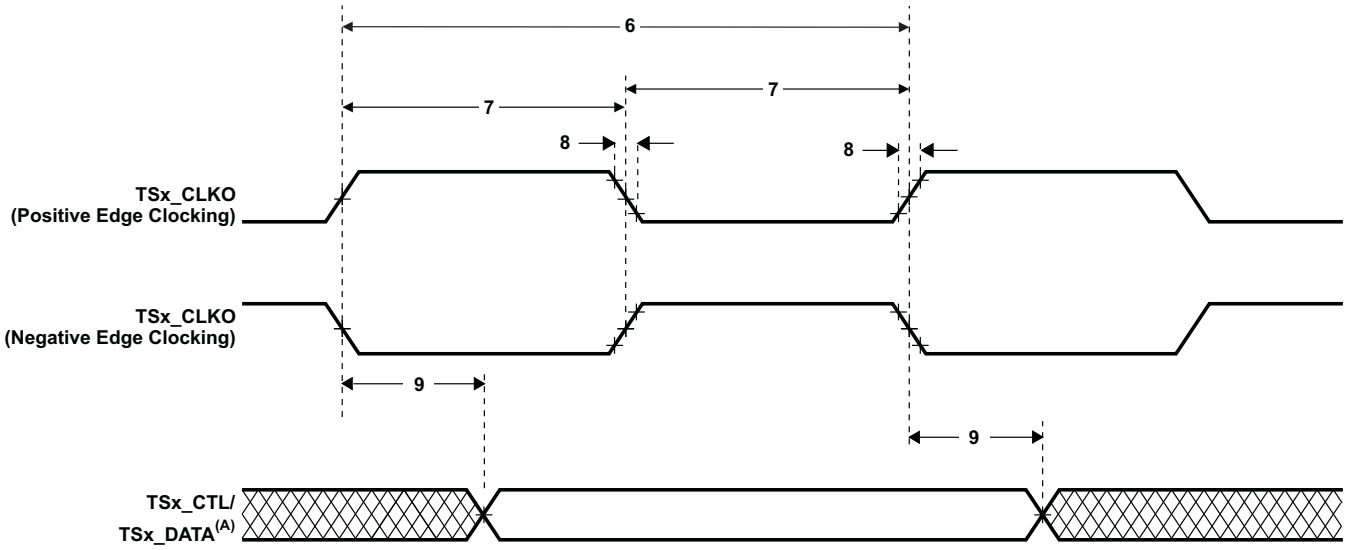

A. TSx_CTL/TSx_DATA output includes: TS0_ENAO, TS0_WAITO, TS0_PSTO, and TS0_DOUT[7:0] for a parallel output. For a serial output, TSx_CTL/TSx_DATA output includes: TSx_ENAO, TSx_EN_WAITO, TSx_PSTO, and TS0_DOUT7 or TS1_DOUT.

Figure 7-47. TSIF Output Timing

Copyright © 2007–2012, Texas Instruments Incorporated

7.13 Clock Recovery Generator (CRGEN)

Each TSIF module has an associated CRGEN module which can adjust the local system time clock based upon the received Program Clock Reference (PCR) packets. CRGEN0 may *only* be used with TSIF 0 and CRGEN 1 may *only* be used with TSIF 1.

Each CRGEN module features:

- Automatic load of received PCR packet values from associated TSIF module
- Local System Time Clock (STC) counter
- PCR/STC difference generator (subtractor)
- Loop Filter (LPF)
- 1-bit sigma/delta modulator digital-to-analog converter (DAC) output for external VCXO control

7.13.1 CRGEN Peripheral Register Description(s)

The CRGEN0 and CRGEN1 registers are shown in Table 7-55 and Table 7-56, respectively.

Table 7-55. CRGEN0 Registers

HEX ADDRESS RANGE	ACRONYM	REGISTER NAME
0x01C2 6000	PID	CRGEN Peripheral Identification Register
0x01C2 6004	CONTROL	CRGEN control register
0x01C2 6008	STC_HI	System Time Clock (STC) current value (upper 17 bits)
0x01C2 600C	STC_LO	STC current value (lower 16 bits plus extension)
0x01C2 6010	STC_VAL_HI	STC value (upper 17 bits) on TSIF0 PCR packet detection
0x01C2 6014	STC_VAL_LO	STC value (lower 16 bits plus extension) on TSIF0 PCR packet detection
0x01C2 6018	PCR_HI	Program Clock Reference (PCR) value (upper 17 bits) from TSIF0 Receive packet
0x01C2 601C	PCR_LO	PCR value (lower 16 bits plus extension) from TSIF0 Receive packet
0x01C2 6020	PCR_PKT_STAT	PCR packet status
0x01C2 6024	LOOP_FILTER	Loop filter (LPF) interface
0x01C2 6028	STC_OFFSET_HI	Offset value of the STC counter for the higher (upper) 17 bits. This value is detected in the STC counter with the first PCR loading pulse signal.
0x01C2 602C	STC_OFFSET_LO	Offset value of the STC counter for the lower 16 bits. The role of this register is same as the STC_LO register 0x01C2 600C.
0x01C2 6030 - 0x01C2 603F	-	Reserved
0x01C2 6040	INTEN	Interrupt enable
0x01C2 6044	INTEN_SET	Interrupt enable set
0x01C2 6048	INTEN_CLR	Interrupt enable clear
0x01C2 604C	INTSTAT	Interrupt status
0x01C2 6050	INTSTAT_CLR	Interrupt status clear
0x01C2 6054	EMU_CTRL	Emulation control
0x01C2 6058 - 0x01C2 607F	-	Reserved

Copyright © 2007–2012, Texas Instruments Incorporated

Table 7-56. CRGEN1 Registers

HEX ADDRESS RANGE	ACRONYM	REGISTER NAME
0x01C2 6400	PID	CRGEN Peripheral Identification Register
0x01C2 6404	CONTROL	CRGEN control register
0x01C2 6408	STC_HI	System Time Clock (STC) current value (upper 17 bits)
0x01C2 640C	STC_LO	STC current value (lower 16 bits plus extension)
0x01C2 6410	STC_VAL_HI	STC value (upper 17 bits) on TSIF1 PCR packet detection
0x01C2 6414	STC_VAL_LO	STC value (lower 16 bits plus extension) on TSIF1 PCR packet detection
0x01C2 6418	PCR_HI	Program Clock Reference (PCR) value (upper 17 bits) from TSIF1 Receive packet
0x01C2 641C	PCR_LO	PCR value (lower 16 bits plus extension) from TSIF1 Receive packet
0x01C2 6420	PCR_PKT_STAT	PCR packet status
0x01C2 6424	LOOP_FILTER	Loop filter (LPF) interface
0x01C2 6428	STC_OFFSET_HI	Offset value of the STC counter for the higher 17 bits. This value is detected in the STC counter with the first PCR loading pulse signal.
0x01C2 642C	STC_OFFSET_LO	Offset value of the STC counter for the lower 16 bits. The role of this register is same as the STC_LO register 0x01C2 640C.
0x01C2 6430 - 0x01C2 643F	-	Reserved
0x01C2 6440	INTEN	Interrupt enable
0x01C2 6444	INTEN_SET	Interrupt enable set
0x01C2 6448	INTEN_CLR	Interrupt enable clear
0x01C2 644C	INTSTAT	Interrupt status
0x01C2 6450	INTSTAT_CLR	Interrupt status clear
0x01C2 6454	EMU_CTRL	Emulation control
0x01C2 6458 - 0x01C2 647F	-	Reserved

Copyright © 2007–2012, Texas Instruments Incorporated

7.13.2 CRGEN Electrical Data/Timing

Table 7-57. Timing Requirements for CRGx_VCXI Input (see Figure 7-48)

NO.			-594, -729			UNIT
			MIN	NOM	MAX	
1	$t_{c(VCXI)}$	Cycle time, CRGx_VCXI	29.63	37.037	44.44	ns
2	$t_{w(VCXIH)}$	Pulse duration, CRGx_VCXI high	0.4P			ns
3	$t_{w(VCXIL)}$	Pulse duration, CRGx_VCXI low	0.4P			ns
4	$t_{t(VCXI)}$	Transition time, CRGx_VCXI			5	ns

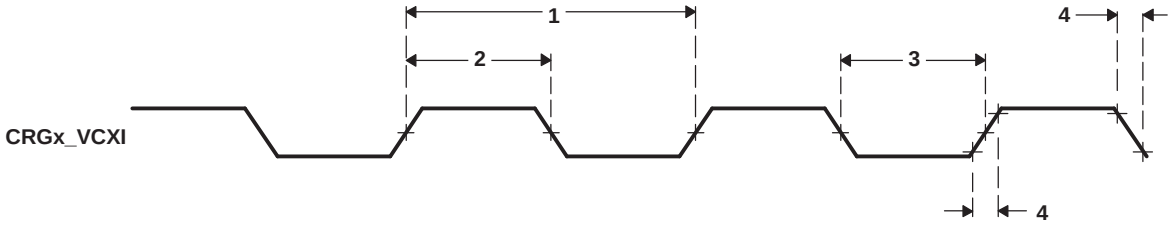

Figure 7-48. CRGx_VCXI Input Timing

Table 7-58. Switching Characteristics Over Recommended Operating Conditions for CRGx_PO Output (see Figure 7-49)

NO.	PARAMETER		-594, -729		UNIT
			MIN	MAX	
1	$t_{w(POH)}$	Pulse duration, CRGx_PO high	59.26		ns
2	$t_{w(POL)}$	Pulse duration, CRGx_PO low	59.26		ns
3	$t_{t(PO)}$	Transition time, CRGx_PO		5	ns

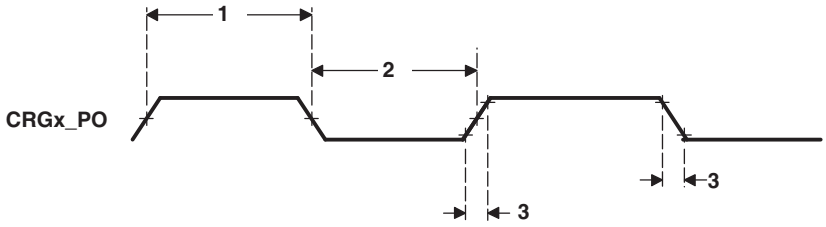

Figure 7-49. CRGx_PO Output Timing

7.14 Video Data Conversion Engine (VDCE)

The DM6467 Video Data Conversion Engine (VDCE) supports the following features:

- Resize function on horizontal (HRSZ) and vertical (VRSZ) with ratio defined by 256/N (N is a natural number that ranges from 256 to 2048) with 4 taps interpolation. Magnification ratio of horizontal resize and vertical resize can be configured separately (different value can be configured).
- Anti-alias filter (combination of two kinds of low-pass filter) with horizontal 7 taps, and vertical direction.
- Chrominance signal format conversion (CCV) on both directions, one is from 4:2:2 to 4:2:0 and one is from 4:2:0 to 4:2:2. This function also uses 4 taps interpolation. MPEG-1 specific format (half-pixel phased from even pixel position of luminance) is also supported.
- Edge padding for preparation of MC with unrestricted motion vector (required by MPEG-4, H.264, VC-1). All modes (progressive, interlace frame, and interlace field) are supported (macro-block level control that is required in H.264 is ***not*** currently supported).
- VC-1 range mapping in advanced profile (in case of displaying decoded reference image or trans-coding from VC-1 to any other format of video codec).
- 2-bit hardware menu overlay with 256 steps of blending for each color.

7.14.1 VDCE Bus Master

The VDCE includes a bus master interface that accesses the DM646x system bus to transfer data. Table 7-59 shows the memory map for the VDCE interface.

Table 7-59. VDCE Master Memory Map

START ADDRESS	END ADDRESS	SIZE (BYTES)	VDCE ACCESS
0x0000 0000	0x0FFF FFFF	256M	Reserved
0x1000 0000	0x1000 FFFF	64K	Reserved
0x1001 0000	0x1001 3FFF	16K	ARM RAM 0 (Data)
0x1001 4000	0x1001 7FFF	16K	ARM RAM 1 (Data)
0x1001 8000	0x1001 FFFF	32K	ARM ROM (Data)
0x1002 0000	0x10FF FFFF	16256K	Reserved
0x1100 0000	0x41FF FFFF	784M	
0x4200 0000	0x43FF FFFF	32M	EMIFA Data ($\overline{CS2}$)
0x4400 0000	0x45FF FFFF	32M	EMIFA Data ($\overline{CS3}$)
0x4600 0000	0x47FF FFFF	32M	EMIFA Data ($\overline{CS4}$)
0x4800 0000	0x49FF FFFF	32M	EMIFA Data ($\overline{CS5}$)
0x4A00 0000	0x4BFF FFFF	32M	Reserved
0x4C00 0000	0x4FFF FFFF	64M	VLYNQ (Remote Data)
0x5000 0000	0x7FFF FFFF	768M	Reserved
0x8000 0000	0x9FFF FFFF	512M	DDR2 Memory Controller
0xA000 0000	0xBFFF FFFF	512M	Reserved
0xC000 0000	0xFFFF FFFF	1G	Reserved

Copyright © 2007–2012, Texas Instruments Incorporated

7.14.2 VDCE Register Description(s)

Table 7-60 shows the VDCE registers.

Table 7-60. VDCE Registers

HEX ADDRESS RANGE	ACRONYM	REGISTER NAME
0x01C1 2800	PID	VDCE peripheral identification register
0x01C1 2804	CTRL	VDCE control register
0x01C1 2808	INTEN	Interrupt enable register
0x01C1 280C	INTEN_SET	Interrupt enable set register
0x01C1 2810	INTEN_CLR	Interrupt enable clear register
0x01C1 2814	INTSTAT	Interrupt status register
0x01C1 2818	INTSTAT_CLR	Interrupt status clear register
0x01C1 281C	EMU_CTRL	Emulation control register
0x01C1 2820	SRD_FRMT	Source/Result data store format register
0x01C1 2824	REQ_SIZE	Request unit size register
0x01C1 2828	PROC_SIZE	Processing unit size register
0x01C1 282C - 0x01C1 283F	–	Reserved
0x01C1 2840	TY_SRCADDR	Luma top field source start address register
0x01C1 2844	TY_SRCSPSIZE	Luma top field source sub-picture size register
0x01C1 2848	TY_SRCOFFSET	Luma top field line source address offset size register
0x01C1 284C	BY_SRCADDR	Luma bottom field source start address register
0x01C1 2850	BY_SRCSPSIZE	Luma bottom field source sub-picture size register
0x01C1 2854	BY_SRCOFFSET	Luma bottom field line source address offset size register
0x01C1 2858	TC_SRCADDR	Chroma top field source start address register
0x01C1 285C	TC_SRCSPSIZE	Chroma top field source sub-picture size register
0x01C1 2860	TC_SRCOFFSET	Chroma top field line source address offset size register
0x01C1 2864	BC_SRCADDR	Chroma bottom field source start address register
0x01C1 2868	BC_SRCSPSIZE	Chroma bottom field source sub-picture size register
0x01C1 286C	BC_SRCOFFSET	Chroma bottom field line source address offset size register
0x01C1 2870	TBMP_SRCADDR	Bitmap top field source start address register
0x01C1 2874	TBMP_SRCOFFSET	Bitmap top field line source address offset register
0x01C1 2878	BBMP_SRCADDR	Bitmap bottom field source start address register
0x01C1 287C	BBMP_SRCOFFSET	Bitmap bottom field line source address offset register
0x01C1 2880	TY_RESADDR	Luma top field result start address register
0x01C1 2884	TY_RESSPSIZE	Luma top field result sub-picture size register
0x01C1 2888	TY_RESOFFSET	Luma top field line result address offset size register
0x01C1 288C	BY_RESADDR	Luma bottom field result start address register
0x01C1 2890	BY_RESSPSIZE	Luma bottom field result sub-picture size register
0x01C1 2894	BY_RESOFFSET	Luma bottom field line result address offset size register
0x01C1 2898	TC_RESADDR	Chroma top field result start address register
0x01C1 289C	TC_RESSPSIZE	Chroma top field result sub-picture size register
0x01C1 28A0	TC_RESOFFSET	Chroma top field result line address offset size register
0x01C1 28A4	BC_RESADDR	Chroma bottom field result start address register
0x01C1 28A8	BC_RESSPSIZE	Chroma bottom field result sub-picture size register
0x01C1 28AC	BC_RESOFFSET	Chroma bottom field line result address offset size register
0x01C1 28B0 - 0x01C1 28BF	–	Reserved
0x01C1 28C0	IMG_Y_SRCSTRTPOS	Luminance source image start position register
0x01C1 28C4	IMG_Y_SRCSIZE	Luminance source image size register
0x01C1 28C8	IMG_C_SRCSTRTPOS	Chrominance source image start position register

Copyright © 2007–2012, Texas Instruments Incorporated

Table 7-60. VDCE Registers (continued)

HEX ADDRESS RANGE	ACRONYM	REGISTER NAME
0x01C1 28CC	IMG_C_SRCSIZE	Chrominance source image size register
0x01C1 28D0	IMG_BMP_SRCSTRTPOS	Bitmap source image start position register
0x01C1 28D4	IMG_BMP_SRCSIZE	Bitmap source image size register
0x01C1 28D8 - 0x01C1 28DF	–	Reserved
0x01C1 28E0	IMG_Y_RESSTRTPOS	Luminance result image start position register
0x01C1 28E4	IMG_Y_RESSIZE	Luminance result image size register
0x01C1 28E8	IMG_C_RESSTRTPOS	Chrominance result image start position register
0x01C1 28EC	IMG_C_RESSIZE	Chrominance result image size register
0x01C1 28F0	IMG_BMP_RESSTRTPOS	Bitmap result image start position (location) register
0x01C1 28F4 - 0x01C1 28FF	–	Reserved
0x01C1 2900	RSZ_MODE	Resize mode definition register
0x01C1 2904	RSZ_HMAG	Horizontal resize magnification ratio control register
0x01C1 2908	RSZ_VMAG	Vertical resize magnification ratio control register
0x01C1 290C	RSZ_HPHASE	Phase of initial pixel on horizontal resize register
0x01C1 2910	RSZ_VPHASE	Phase of initial pixel on vertical resize register
0x01C1 2914	RSZ_AFILTER	Horizontal anti-aliasing (flicker) filter control register
0x01C1 2918 - 0x01C1 291F	–	Reserved
0x01C1 2920	CCV_MODE	Chrominance conversion mode control register
0x01C1 2924 - 0x01C1 293F	–	Reserved
0x01C1 2940	BLD_LUT_00	Look-up table for index 00 register
0x01C1 2944	BLD_LUT_01	Look-up table for index 01 register
0x01C1 2948	BLD_LUT_02	Look-up table for index 02 register
0x01C1 294C	BLD_LUT_03	Look-up table for index 03 register
0x01C1 2950 - 0x01C1 295F	–	Reserved
0x01C1 2960	RGMP_CTRL	Ramp mapping control reigster
0x01C1 2964 - 0x01C1 2983	–	Reserved
0x01C1 2984	EPD_LUMA_WIDTH	Edge padding width for luminance register
0x01C1 2988	EPD_CHROMA_WIDTH	Edge padding width for chrominance register
0x01C1 298C - 0x01C1 291F	–	Reserved

Copyright © 2007–2012, Texas Instruments Incorporated

7.15 Peripheral Component Interconnect (PCI)

The DM6467 DMSoC supports connections to PCI-compliant devices via the integrated PCI master/slave bus interface. The PCI port interfaces to DSP internal resources via the data switched central resource. The data switched central resource is described in more detail in Section 5, *System Interconnect*.

For more detailed information on the PCI port peripheral module, see the *TMS320DM643x DMP Peripheral Component Interconnect (PCI)* User's Guide (literature number SPRU985).

7.15.1 PCI Device-Specific Information

The PCI peripheral on the DM6467 DMSoC conforms to the *PCI Local Bus Specification Revision 2.3*. The PCI peripheral can act both as a PCI bus master and as a target. It supports PCI bus operation of speeds up to 33 MHz and uses a 32-bit data/address bus.

On the DM6467 device, the pins of the PCI peripheral are multiplexed with the pins of the EMIFA, GPIO, HPI, and ATA peripherals. For more detailed information on how to select PCI, see Section 4, Device Configurations.

The DM6467 device provides an initialization mechanism through which the default values for some of the PCI configuration registers can be read from an I2C EEPROM. Table 7-61 shows the registers which can be initialized through the PCI auto-initialization. The default value of these registers when PCI auto-initialization is **not** used. PCI auto-initialization is enabled by selecting PCI boot with auto-initialization. For information on how to select PCI boot with auto-initialization, see Section 4.4.1, Boot Modes. For more information on PCI auto-initialization, see the *TMS320DM646x DMSoC Peripheral Component Interconnect (PCI)* User's Guide (literature number SPRUER2) and the *Using the TMIS320DM646x Bootloader* Application Report (literature number SPRAAS0).

The PCI peripheral is a master peripheral within the DM6467 DMSoC.

Table 7-61. Default Values for PCI Configuration Registers

REGISTER	DEFAULT VALUE (HEX)
0x01C1 A000—Vendor ID/Device ID Register (PCIVENDEV)	**B002 104Ch**
Device ID	B002h
Vendor ID	104Ch
0x01C1 A008—Class Code/Revision ID Register (PCICLREV)	**1180 0001h**
Class Code	80h
Revision ID	01h
0x01C1 A02C—System Vendor ID/Subsystem ID (PCISUBID)	**0000 0000h**
Subsystem ID	0000
System Vendor ID	0000
0x01C1 A03C—Max Latency/Min Grant/Interrupt Pin/Interrupt Line	**0000 0100h**
Max Latency	00
Min Grant	00
Interrupt Pin	01
Interrupt Line	00

The on-chip Bootloader supports a host boot which allows an external PCI device to load application code into the DMSoC's memory space.

Copyright © 2007–2012, Texas Instruments Incorporated

7.15.2 PCI External Master Memory Map

The PCI port includes a local DMA interface that allows external PCI master device intiated transfers to access the DM646x system bus. Table 7-62 shows the memory map for the PCI interface.

Table 7-62. PCI DMA Master Memory Map

START ADDRESS	END ADDRESS	SIZE (BYTES)	PCI DMA ACCESS
0x0000 0000	0x01BF FFFF	28M	Reserved
0x01C0 0000	0x0FFF FFFF	228M	CFG Bus Peripherals
0x1001 0000	0x1001 3FFF	16K	ARM RAM 0 (Data)
0x1001 4000	0x1001 7FFF	16K	ARM RAM 1 (Data)
0x1001 8000	0x1001 FFFF	32K	ARM ROM (Data)
0x1002 0000	0x10FF FFFF	16256K	Reserved
0x1100 0000	0x113F FFFF	4M	
0x1140 0000	0x114F FFFF	1M	
0x1150 0000	0x115F FFFF	1M	
0x1160 0000	0x116F FFFF	1M	
0x1170 0000	0x117F FFFF	1M	
0x1180 0000	0x1180 FFFF	64K	
0x1181 0000	0x1181 7FFF	32K	
0x1181 8000	0x1183 7FFF	128K	C64x+ L2 RAM/Cache
0x1183 8000	0x118F FFFF	800K	Reserved
0x1190 0000	0x11DF FFFF	5M	
0x11E0 0000	0x11E0 7FFF	32K	C64x+ L1P RAM/Cache
0x11E0 8000	0x11EF FFFF	992K	Reserved
0x11F0 0000	0x11F0 7FFF	32K	C64x+ L1D RAM/Cache
0x11F0 8000	0x11FF FFFF	992K	Reserved
0x1200 0000	0x4BFF FFFF	928M	
0x4C00 0000	0x4FFF FFFF	64M	VLYNQ (Remote Data)
0x5000 0000	0x7FFF FFFF	768M	Reserved
0x8000 0000	0x9FFF FFFF	512M	DDR2 Memory Controller
0xA000 0000	0xBFFF FFFF	512M	Reserved
0xC000 0000	0xFFFF FFFF	1G	Reserved

Copyright © 2007–2012, Texas Instruments Incorporated

7.15.3 PCI Peripheral Register Description(s)

Table 7-63. PCI Back End Configuration Registers

DMSoC ACCESS HEX ADDRESS RANGE	ACRONYM	DMSoC ACCESS REGISTER NAME
01C1 A000 - 01C1 A00F	-	Reserved
01C1 A010	PCISTATSET	PCI Status Set Register
01C1 A014	PCISTATCLR	PCI Status Clear Register
01C1 A018 - 01C1 A01F	-	Reserved
01C1 A020	PCIHINTSET	PCI Host Interrupt Enable Set Register
01C1 A024	PCIHINTCLR	PCI Host Interrupt Enable Clear Register
01C1 A028 - 01C1 A02F	-	Reserved
01C1 A030	PCIBINTSET	PCI Back End Application Interrupt Enable Set Register
01C1 A034	PCIBINTCLR	PCI Back End Application Interrupt Enable Clear Register
01C1 A038	-	Reserved
01C1 A03C - 01C1 A0FF	-	Reserved
01C1 A100	PCIVENDEVMIR	PCI Vendor ID/Device ID Mirror Register
01C1 A104	PCICSRMIR	PCI Command/Status Mirror Register
01C1 A108	PCICLREVMIR	PCI Class Code/Revision ID Mirror Register
01C1 A10C	PCICLINEMIR	PCI BIST/Header Type/Latency Timer/Cacheline Size Mirror Register
01C1 A110	PCIBAR0MSK	PCI Base Address Mask Register 0
01C1 A114	PCIBAR1MSK	PCI Base Address Mask Register 1
01C1 A118	PCIBAR2MSK	PCI Base Address Mask Register 2
01C1 A11C	PCIBAR3MSK	PCI Base Address Mask Register 3
01C1 A120	PCIBAR4MSK	PCI Base Address Mask Register 4
01C1 A124	PCIBAR5MSK	PCI Base Address Mask Register 5
01C1 A128 - 01C1 A12B	-	Reserved
01C1 A12C	PCISUBIDMIR	PCI Subsystem Vendor ID/Subsystem ID Mirror Register
01C1 A130	-	Reserved
01C1 A134	PCICPBPTRMIR	PCI Capabilities Pointer Mirror Register
01C1 A138 - 01C1 A13B	-	Reserved
01C1 A13C	PCILGINTMIR	PCI Max Latency/Min Grant/Interrupt Pin/Interrupt Line Mirror Register
01C1 A140 - 01C1 A17F	-	Reserved
01C1 A180	PCISLVCNTL	PCI Slave Control Register
01C1 A184 - 01C1 A1BF	-	Reserved
01C1 A1C0	PCIBAR0TRL	PCI Slave Base Address 0 Translation Register
01C1 A1C4	PCIBAR1TRL	PCI Slave Base Address 1 Translation Register
01C1 A1C8	PCIBAR2TRL	PCI Slave Base Address 2 Translation Register
01C1 A1CC	PCIBAR3TRL	PCI Slave Base Address 3 Translation Register
01C1 A1D0	PCIBAR4TRL	PCI Slave Base Address 4 Translation Register
01C1 A1D4	PCIBAR5TRL	PCI Slave Base Address 5 Translation Register
01C1 A1D8 - 01C1 A1DF	-	Reserved
01C1 A1E0	PCIBAR0MIR	PCI Base Address Register 0 Mirror Register
01C1 A1E4	PCIBAR1MIR	PCI Base Address Register 1 Mirror Register
01C1 A1E8	PCIBAR2MIR	PCI Base Address Register 2 Mirror Register
01C1 A1EC	PCIBAR3MIR	PCI Base Address Register 3 Mirror Register
01C1 A1F0	PCIBAR4MIR	PCI Base Address Register 4 Mirror Register
01C1 A1F4	PCIBAR5MIR	PCI Base Address Register 5 Mirror Register
01C1 A1F8 - 01C1 A2FF	-	Reserved
01C1 A300	PCIMCFGDAT	PCI Master Configuration/IO Access Data Register

Copyright © 2007–2012, Texas Instruments Incorporated

Table 7-63. PCI Back End Configuration Registers (continued)

DMSoC ACCESS HEX ADDRESS RANGE	ACRONYM	DMSoC ACCESS REGISTER NAME
01C1 A304	PCIMCFGADR	PCI Master Configuration/IO Access Address Register
01C1 A308	PCIMCFGCMD	PCI Master Configuration/IO Access Command Register
01C1 A30C - 01C1 A30F	-	Reserved
01C1 A310	PCIMSTCFG	PCI Master Configuration Register

Table 7-64. DMSoC-to-PCI Address Translation Registers

DMSoC ACCESS HEX ADDRESS RANGE	ACRONYM	DMSoC ACCESS REGISTER NAME
01C1 A314	PCIADDSUB0	PCI Address Substitute 0 Register
01C1 A318	PCIADDSUB1	PCI Address Substitute 1 Register
01C1 A31C	PCIADDSUB2	PCI Address Substitute 2 Register
01C1 A320	PCIADDSUB3	PCI Address Substitute 3 Register
01C1 A324	PCIADDSUB4	PCI Address Substitute 4 Register
01C1 A328	PCIADDSUB5	PCI Address Substitute 5 Register
01C1 A32C	PCIADDSUB6	PCI Address Substitute 6 Register
01C1 A330	PCIADDSUB7	PCI Address Substitute 7 Register
01C1 A334	PCIADDSUB8	PCI Address Substitute 8 Register
01C1 A338	PCIADDSUB9	PCI Address Substitute 9 Register
01C1 A33C	PCIADDSUB10	PCI Address Substitute 10 Register
01C1 A340	PCIADDSUB11	PCI Address Substitute 11 Register
01C1 A344	PCIADDSUB12	PCI Address Substitute 12 Register
01C1 A348	PCIADDSUB13	PCI Address Substitute 13 Register
01C1 A34C	PCIADDSUB14	PCI Address Substitute 14 Register
01C1 A350	PCIADDSUB15	PCI Address Substitute 15 Register
01C1 A354	PCIADDSUB16	PCI Address Substitute 16 Register
01C1 A358	PCIADDSUB17	PCI Address Substitute 17 Register
01C1 A35C	PCIADDSUB18	PCI Address Substitute 18 Register
01C1 A360	PCIADDSUB19	PCI Address Substitute 19 Register
01C1 A364	PCIADDSUB20	PCI Address Substitute 20 Register
01C1 A368	PCIADDSUB21	PCI Address Substitute 21 Register
01C1 A36C	PCIADDSUB22	PCI Address Substitute 22 Register
01C1 A370	PCIADDSUB23	PCI Address Substitute 23 Register
01C1 A374	PCIADDSUB24	PCI Address Substitute 24 Register
01C1 A378	PCIADDSUB25	PCI Address Substitute 25 Register
01C1 A37C	PCIADDSUB26	PCI Address Substitute 26 Register
01C1 A380	PCIADDSUB27	PCI Address Substitute 27 Register
01C1 A384	PCIADDSUB28	PCI Address Substitute 28 Register
01C1 A388	PCIADDSUB29	PCI Address Substitute 29 Register
01C1 A38C	PCIADDSUB30	PCI Address Substitute 30 Register
01C1 A390	PCIADDSUB31	PCI Address Substitute 31 Register

Copyright © 2007–2012, Texas Instruments Incorporated

Table 7-65. PCI Hook Configuration Registers

DMSoC ACCESS HEX ADDRESS RANGE	ACRONYM	DMSoC ACCESS REGISTER NAME
01C1 A394	PCIVENDEVPRG	PCI Vendor ID and Device ID Program Register
01C1 A398	–	Reserved
01C1 A39C	PCICLREVPRG	PCI Class Code and Revision ID Program Register
01C1 A3A0	PCISUBIDPRG	PCI Subsystem Vendor ID and Subsystem ID Program Register
01C1 A3A4	PCIMAXLGPRG	PCI Max Latency and Min Grant Program Register
01C1 A3A8	–	Reserved
01C1 A3AC	PCICFGDONE	PCI Configuration Done Register
01C1 A3B0 - 01C1 A3FB	–	Reserved
01C1 A3FC - 01C1 A3FF	–	Reserved
01C1 A400 - 01C1 A7FF	–	Reserved

Table 7-66. PCI External Memory Space

DMSoC HEX ADDRESS RANGE	ACRONYM	DESCRIPTION
3000 0000 - 307F FFFF	–	PCI Master Window 0
3080 0000 - 30FF FFFF	–	PCI Master Window 1
3100 0000 - 317F FFFF	–	PCI Master Window 2
3180 0000 - 31FF FFFF	–	PCI Master Window 3
3200 0000 - 327F FFFF	–	PCI Master Window 4
3280 0000 - 32FF FFFF	–	PCI Master Window 5
3300 0000 - 337F FFFF	–	PCI Master Window 6
3380 0000 - 33FF FFFF	–	PCI Master Window 7
3400 0000 - 347F FFFF	–	PCI Master Window 8
3480 0000 - 34FF FFFF	–	PCI Master Window 9
3500 0000 - 357F FFFF	–	PCI Master Window 10
3580 0000 - 35FF FFFF	–	PCI Master Window 11
3600 0000 - 367F FFFF	–	PCI Master Window 12
3680 0000 - 36FF FFFF	–	PCI Master Window 13
3700 0000 - 377F FFFF	–	PCI Master Window 14
3780 0000 - 37FF FFFF	–	PCI Master Window 15
3800 0000 - 387F FFFF	–	PCI Master Window 16
3880 0000 - 38FF FFFF	–	PCI Master Window 17
3900 0000 - 397F FFFF	–	PCI Master Window 18
3980 0000 - 39FF FFFF	–	PCI Master Window 19
3A00 0000 - 3A7F FFFF	–	PCI Master Window 20
3A80 0000 - 3AFF FFFF	–	PCI Master Window 21
3B00 0000 - 3B7F FFFF	–	PCI Master Window 22
3B80 0000 - 3BFF FFFF	–	PCI Master Window 23
3C00 0000 - 3C7F FFFF	–	PCI Master Window 24
3C80 0000 - 3CFF FFFF	–	PCI Master Window 25
3D00 0000 - 3D7F FFFF	–	PCI Master Window 26
3D80 0000 - 3DFF FFFF	–	PCI Master Window 27
3E00 0000 - 3E7F FFFF	–	PCI Master Window 28
3E80 0000 - 3EFF FFFF	–	PCI Master Window 29
3F00 0000 - 3F7F FFFF	–	PCI Master Window 30
3F80 0000 - 3FFF FFFF	–	PCI Master Window 31

Copyright © 2007–2012, Texas Instruments Incorporated

7.15.4 PCI Electrical Data/Timing

Texas Instruments (TI) has performed the simulation and system characterization to ensure that the PCI peripheral meets all AC timing specifications as required by the *PCI Local Bus Specification Revision 2.3*. Therefore, the AC timing specifications are **not** reproduced here. For more information on the AC timing specifications, see Section 4.2.3, *Timing Specification* (33-MHz timing) of the *PCI Local Bus Specification Revision 2.3*. **Note:** The DM6467 PCI peripheral **only** supports 3.3-V signaling and 33-MHz operation.

Copyright © 2007–2012, Texas Instruments Incorporated

7.16 Ethernet MAC (EMAC)

The Ethernet Media Access Controller (EMAC) module provides an efficient interface between the DM6467 and the networked community. The EMAC supports 10Base-T (10 Mbits/second [Mbps]), and 100BaseTX (100 Mbps), in either half- or full-duplex mode, and 1000BaseT (1000 Mbps) in full-duplex mode, with hardware flow control and quality-of-service (QOS) support.

The EMAC controls the flow of packet data from the DM6467 device to the PHY. The MDIO module controls the PHY configuration and status monitoring.

The EMAC module conforms to the IEEE 802.3-2002 standard, describing the "Carrier Sense Multiple Access with Collision Detection (CSMA/CD) Access Method and Physical Layer" specifications. The IEEE 802.3 standard has also been adopted by ISO/IEC and re-designated as ISO/IEC 8802-3:2000(E).

Deviating from this standard, the EMAC module does not use the Transmit Coding Error signal MTXER. Instead of driving the error pin when an underflow condition occurs on a transmitted frame, the EMAC will intentionally generate an incorrect checksum by inverting the frame CRC, so that the transmitted frame will be detected as an error by the network. In addition, the EMAC I/Os operate at 3.3 V and are ***not*** compatible with 2.5-V I/O signaling. Therefore, only Ethernet PHYs with 3.3-V I/O interface should be used.

Both the EMAC and MDIO modules interface to the DM6467 device through a custom interface that allows efficient data transmission and reception. This custom interface is referred to as the EMAC control module. The EMAC control module contains the necessary components to allow the EMAC to make efficient use of device memory, plus it controls device interrupts. The EMAC control module incorporates 8K bytes of internal RAM to hold EMAC buffer descriptors.

For more detailed information on the EMAC, see the *TMS320DM646x DMSoC Ethernet Media Access Controller (EMAC)/Management Data Input/Output (MDIO) Module* User's Guide (literature number SPRUEQ6).

7.16.1 EMAC Device-Specific Information

The EMAC module on the DM6467 supports two interface modes: Media Independent Interface (MII) and Gigabit Media Independent Interface (GMII). The MII and GMII interface modes are defined in the IEEE 802.3-2002 standard.

The DM6467 EMAC uses the same pins for the MII and GMII modes of operation. Only one mode can be used at a time. The mode used is selected at device reset based on the GMIIEN bit in the MACCONTROL register. For more detailed information on the EMAC GMIIEN bit, see the *TMS320DM646x DMSoC Ethernet Media Access Controller (EMAC)/Management Data Input/Output (MDIO) Module* User's Guide (literature number SPRUEQ6).

The MII and GMII modes-of-operation pins are as follows:

- MII: MTCLK, MRCLK, MTXD[3:0], MRXD[3:0], MTXEN, MRXDV, MRXER, MCOL, MCRS, MDCLK, and MDIO.
- GMII: RFTCLK, GMTCLK, MTCLK, MRCLK, MTXD[7:0], MRXD[7:0], MTXEN, MRXDV, MRXER, MCOL, MCRS, MDCLK, and MDIO.

Copyright © 2007–2012, Texas Instruments Incorporated

7.16.2 EMAC Bus Master Memory Map

The EMAC control module includes a multi-channel DMA engine which is used to transfer receive and transmit packets between the EMAC and DM6467 memory. Table 7-67 shows the memory map for the EMAC DMA.

Table 7-67. EMAC DMA Master Memory Map

START ADDRESS	END ADDRESS	SIZE (BYTES)	EMAC DMA ACCESS
0x0000 0000	0x3FFF FFFF	1G	Reserved
0x4000 0000	0x4BFF FFFF	192M	Reserved
0x4C00 0000	0x4FFF FFFF	64M	VLYNQ (Remote Data)
0x5000 0000	0x7FFF FFFF	768M	Reserved
0x8000 0000	0x9FFF FFFF	512M	DDR2 Memory Controller
0xA000 0000	0xBFFF FFFF	512M	Reserved
0xC000 0000	0xFFFF FFFF	1G	Reserved

Copyright © 2007–2012, Texas Instruments Incorporated

7.16.3 EMAC Peripheral Register Description(s)

Table 7-68. Ethernet MAC (EMAC) Control Registers

HEX ADDRESS RANGE	ACRONYM	REGISTER NAME
0x01C8 0000	TXIDVER	Transmit identification and version register
0x01C8 0004	TXCONTROL	Transmit control register
0x01C8 0008	TXTEARDOWN	Transmit teardown register
0x01C8 000C - 0x01C8 000F	–	Reserved
0x01C8 0010	RXIDVER	Receive identification and version register
0x01C8 0014	RXCONTROL	Receive control register
0x01C8 0018	RXTEARDOWN	Receive teardown register
0x01C8 001C - 0x01C8 007F	–	Reserved
0x01C8 0080	TXINTSTATRAW	Transmit interrupt status (unmasked) register
0x01C8 0084	TXINTSTATMASKED	Transmit interrupt status (masked) register
0x01C8 0088	TXINTMASKSET	Transmit interrupt mask set register
0x01C8 008C	TXINTMASKCLEAR	Transmit interrupt mask clear register
0x01C8 0090	MACINVECTOR	MAC input vector register
0x01C8 0094	MACEOIVECTOR	MAC end of interrupt vector register
0x01C8 0098 - 0x01C8 009F	–	Reserved
0x01C8 00A0	RXINTSTATRAW	Receive interrupt status (unmasked) register
0x01C8 00A4	RXINTSTATMASKED	Receive interrupt status (masked) register
0x01C8 00A8	RXINTMASKSET	Receive interrupt mask set register
0x01C8 00AC	RXINTMASKCLEAR	Receive interrupt mask clear register
0x01C8 00B0	MACINTSTATRAW	MAC interrupt status (unmasked) register
0x01C8 00B4	MACINTSTATMASKED	MAC interrupt status (masked) register
0x01C8 00B8	MACINTMASKSET	MAC interrupt mask set register
0x01C8 00BC	MACINTMASKCLEAR	MAC interrupt mask clear register
0x01C8 00C0 - 0x01C8 00FF	–	Reserved
0x01C8 0100	RXMBPENABLE	Receive multicast/broadcast/promiscuous channel enable register
0x01C8 0104	RXUNICASTSET	Receive unicast enable set register
0x01C8 0108	RXUNICASTCLEAR	Receive unicast clear register
0x01C8 010C	RXMAXLEN	Receive maximum length register
0x01C8 0110	RXBUFFEROFFSET	Receive buffer offset register
0x01C8 0114	RXFILTERLOWTHRESH	Receive filter low priority frame threshold register
0x01C8 0118 - 0x01C8 011F	–	Reserved
0x01C8 0120	RX0FLOWTHRESH	Receive channel 0 flow control threshold register
0x01C8 0124	RX1FLOWTHRESH	Receive channel 1 flow control threshold register
0x01C8 0128	RX2FLOWTHRESH	Receive channel 2 flow control threshold register
0x01C8 012C	RX3FLOWTHRESH	Receive channel 3 flow control threshold register
0x01C8 0130	RX4FLOWTHRESH	Receive channel 4 flow control threshold register
0x01C8 0134	RX5FLOWTHRESH	Receive channel 5 flow control threshold register
0x01C8 0138	RX6FLOWTHRESH	Receive channel 6 flow control threshold register
0x01C8 013C	RX7FLOWTHRESH	Receive channel 7 flow control threshold register
0x01C8 0140	RX0FREEBUFFER	Receive channel 0 free buffer count register
0x01C8 0144	RX1FREEBUFFER	Receive channel 1 free buffer count register
0x01C8 0148	RX2FREEBUFFER	Receive channel 2 free buffer count register
0x01C8 014C	RX3FREEBUFFER	Receive channel 3 free buffer count register
0x01C8 0150	RX4FREEBUFFER	Receive channel 4 free buffer count register
0x01C8 0154	RX5FREEBUFFER	Receive channel 5 free buffer count register

Copyright © 2007–2012, Texas Instruments Incorporated

Table 7-68. Ethernet MAC (EMAC) Control Registers (continued)

HEX ADDRESS RANGE	ACRONYM	REGISTER NAME
0x01C8 0158	RX6FREEBUFFER	Receive channel 6 free buffer count register
0x01C8 015C	RX7FREEBUFFER	Receive channel 7 free buffer count register
0x01C8 0160	MACCONTROL	MAC control register
0x01C8 0164	MACSTATUS	MAC status register
0x01C8 0168	EMCONTROL	Emulation control register
0x01C8 016C	FIFOCONTROL	FIFO control register (transmit and receive)
0x01C8 0170	MACCONFIG	MAC configuration register
0x01C8 0174	SOFTRESET	Soft reset register
0x01C8 0178 - 0x01C8 01CF	–	Reserved
0x01C8 01D0	MACSRCADDRLO	MAC source address low bytes register (lower 16-bits)
0x01C8 01D4	MACSRCADDRHI	MAC source address high bytes register (upper 32-bits)
0x01C8 01D8	MACHASH1	MAC hash address register 1
0x01C8 01DC	MACHASH2	MAC hash address register 2
0x01C8 01E0	BOFFTEST	Back off test register
0x01C8 01E4	TPACETEST	Transmit pacing algorithm test register
0x01C8 01E8	RXPAUSE	Receive pause timer register
0x01C8 01EC	TXPAUSE	Transmit pause timer register
0x01C8 01F0 - 0x01C8 01FF	–	Reserved
0x01C8 0200 - 0x01C8 02FF	(see Table 7-69)	EMAC statistics registers
0x01C8 0300 - 0x01C8 04FF	–	Reserved
0x01C8 0500	MACADDRLO	MAC address low bytes register (used in receive address matching)
0x01C8 0504	MACADDRHI	MAC address high bytes register (used in receive address matching)
0x01C8 0508	MACINDEX	MAC index register
0x01C8 050C - 0x01C8 05FF	–	Reserved
0x01C8 0600	TX0HDP	Transmit channel 0 DMA head descriptor pointer register
0x01C8 0604	TX1HDP	Transmit channel 1 DMA head descriptor pointer register
0x01C8 0608	TX2HDP	Transmit channel 2 DMA head descriptor pointer register
0x01C8 060C	TX3HDP	Transmit channel 3 DMA head descriptor pointer register
0x01C8 0610	TX4HDP	Transmit channel 4 DMA head descriptor pointer register
0x01C8 0614	TX5HDP	Transmit channel 5 DMA head descriptor pointer register
0x01C8 0618	TX6HDP	Transmit channel 6 DMA head descriptor pointer register
0x01C8 061C	TX7HDP	Transmit channel 7 DMA head descriptor pointer register
0x01C8 0620	RX0HDP	Receive channel 0 DMA head descriptor pointer register
0x01C8 0624	RX1HDP	Receive channel 1 DMA head descriptor pointer register
0x01C8 0628	RX2HDP	Receive channel 2 DMA head descriptor pointer register
0x01C8 062C	RX3HDP	Receive channel 3 DMA head descriptor pointer register
0x01C8 0630	RX4HDP	Receive channel 4 DMA head descriptor pointer register
0x01C8 0634	RX5HDP	Receive channel 5 DMA head descriptor pointer register
0x01C8 0638	RX6HDP	Receive channel 6 DMA head descriptor pointer register
0x01C8 063C	RX7HDP	Receive channel 7 DMA head descriptor pointer register
0x01C8 0640	TX0CP	Transmit channel 0 completion pointer (interrupt acknowledge) register
0x01C8 0644	TX1CP	Transmit channel 1 completion pointer (interrupt acknowledge) register
0x01C8 0648	TX2CP	Transmit channel 2 completion pointer (interrupt acknowledge) register
0x01C8 064C	TX3CP	Transmit channel 3 completion pointer (interrupt acknowledge) register

Copyright © 2007–2012, Texas Instruments Incorporated

Table 7-68. Ethernet MAC (EMAC) Control Registers (continued)

HEX ADDRESS RANGE	ACRONYM	REGISTER NAME
0x01C8 0650	TX4CP	Transmit channel 4 completion pointer (interrupt acknowledge) register
0x01C8 0654	TX5CP	Transmit channel 5 completion pointer (interrupt acknowledge) register
0x01C8 0658	TX6CP	Transmit channel 6 completion pointer (interrupt acknowledge) register
0x01C8 065C	TX7CP	Transmit channel 7 completion pointer (interrupt acknowledge) register
0x01C8 0660	RX0CP	Receive channel 0 completion pointer (interrupt acknowledge) register
0x01C8 0664	RX1CP	Receive channel 1 completion pointer (interrupt acknowledge) register
0x01C8 0668	RX2CP	Receive channel 2 completion pointer (interrupt acknowledge) register
0x01C8 066C	RX3CP	Receive channel 3 completion pointer (interrupt acknowledge) register
0x01C8 0670	RX4CP	Receive channel 4 completion pointer (interrupt acknowledge) register
0x01C8 0674	RX5CP	Receive channel 5 completion pointer (interrupt acknowledge) register
0x01C8 0678	RX6CP	Receive channel 6 completion pointer (interrupt acknowledge) register
0x01C8 067C	RX7CP	Receive channel 7 completion pointer (interrupt acknowledge) register
0x01C8 0680 - 0x01C8 07FF	–	Reserved

Table 7-69. EMAC Statistics Registers

HEX ADDRESS RANGE	ACRONYM	REGISTER NAME
0x01C8 0200	RXGOODFRAMES	Good receive frames register
0x01C8 0204	RXBCASTFRAMES	Broadcast receive frames register (Total number of good broadcast frames received)
0x01C8 0208	RXMCASTFRAMES	Multicast receive frames register (Total number of good multicast frames received)
0x01C8 020C	RXPAUSEFRAMES	Pause receive frames register
0x01C8 0210	RXCRCERRORS	Receive CRC errors register (Total number of frames received with CRC errors)
0x01C8 0214	RXALIGNCODEERRORS	Receive alignment/code errors register (Total number of frames received with alignment/code errors)
0x01C8 0218	RXOVERSIZED	Receive oversized frames register (Total number of oversized frames received)
0x01C8 021C	RXJABBER	Receive jabber frames register (Total number of jabber frames received)
0x01C8 0220	RXUNDERSIZED	Receive undersized frames register (Total number of undersized frames received)
0x01C8 0224	RXFRAGMENTS	Receive Frame Fragments Register
0x01C8 0228	RXFILTERED	Filtered receive frames register
0x01C8 022C	RXQOSFILTERED	Received QOS filtered frames register
0x01C8 0230	RXOCTETS	Receive octet frames register (Total number of received bytes in good frames)
0x01C8 0234	TXGOODFRAMES	Good Transmit Frames Register (Total number of good frames transmitted)
0x01C8 0238	TXBCASTFRAMES	Broadcast transmit frames register
0x01C8 023C	TXMCASTFRAMES	Multicast transmit frames register
0x01C8 0240	TXPAUSEFRAMES	Pause transmit frames register

Copyright © 2007–2012, Texas Instruments Incorporated

Table 7-69. EMAC Statistics Registers (continued)

HEX ADDRESS RANGE	ACRONYM	REGISTER NAME
0x01C8 0244	TXDEFERRED	Deferred transmit frames register
0x01C8 0248	TXCOLLISION	Transmit collision frames register
0x01C8 024C	TXSINGLECOLL	Transmit single collision frames register
0x01C8 0250	TXMULTICOLL	Transmit multiple collision frames register
0x01C8 0254	TXEXCESSIVECOLL	Transmit excessive collision frames register
0x01C8 0258	TXLATECOLL	Transmit late collision frames register
0x01C8 025C	TXUNDERRUN	Transmit underrun error register
0x01C8 0260	TXCARRIERSENSE	Transmit carrier sense errors register
0x01C8 0264	TXOCTETS	Transmit octet frames register
0x01C8 0268	FRAME64	Transmit and receive 64 octet frames register
0x01C8 026C	FRAME65T127	Transmit and receive 65 to 127 octet frames register
0x01C8 0270	FRAME128T255	Transmit and receive 128 to 255 octet frames register
0x01C8 0274	FRAME256T511	Transmit and receive 256 to 511 octet frames register
0x01C8 0278	FRAME512T1023	Transmit and receive 512 to 1023 octet frames register
0x01C8 027C	FRAME1024TUP	Transmit and receive 1024 to 1518 octet frames register
0x01C8 0280	NETOCTETS	Network octet frames register
0x01C8 0284	RXSOFOVERRUNS	Receive FIFO or DMA start of frame overruns register
0x01C8 0288	RXMOFOVERRUNS	Receive FIFO or DMA middle of frame overruns register
0x01C8 028C	RXDMAOVERRUNS	Receive DMA start of frame and middle of frame overruns register
0x01C8 0290 - 0x01C8 02FF	–	Reserved

Table 7-70. EMAC Control Module Registers

HEX ADDRESS RANGE	ACRONYM	REGISTER NAME
0x01C8 1000	CMIDVER	Identification and version register
0x01C8 1004	CMSOFTRESET	Software reset register
0x01C8 1008	CMEMCONTROL	Emulation control register
0x01C8 100C	CMINTCTRL	Interrupt control register
0x01C8 1010	CMRXTHRESHINTEN	Receive threshold interrupt enable register
0x01C8 1014	CMRXINTEN	Receive interrupt enable register
0x01C8 1018	CMTXINTEN	Transmit interrupt enable register
0x01C8 101C	CMMISCINTEN	Miscellaneous interrupt enable register
0x01C8 1020 - 0x01C8 103F	–	Reserved
0x01C8 1040	CMRXTHRESHINTSTAT	Receive threshold interrupt status register
0x01C8 1044	CMRXINTSTAT	Receive interrupt status register
0x01C8 1048	CMTXINTSTAT	Transmit interrupt status register
0x01C8 104C	CMMISCINTSTAT	Miscellaneous interrupt status register
0x01C8 1050 - 0x01C8 106F	–	Reserved
0x01C8 1070	CMRXINTMAX	Receive interrupts per millisecond register
0x01C8 1074	CMTXINTMAX	Transmit interrupts per millisecond register
0x01C8 1078 - 0x01C8 10FF	–	Reserved
0x01C8 1100 - 0x01C8 1FFF	–	Reserved

Table 7-71. EMAC Descriptor Memory

HEX ADDRESS RANGE	ACRONYM	DESCRIPTION
0x01C8 2000 - 0x01C8 3FFF	–	EMAC Control Module Descriptor Memory

Copyright © 2007–2012, Texas Instruments Incorporated

7.16.4 EMAC Electrical Data/Timing

Table 7-72. Timing Requirements for MRCLK - MII and GMII Operation (see Figure 7-50)

NO.			-594, -729						UNIT
			1000 Mbps (GMII Only)		100 Mbps		10 Mbps		
			MIN	MAX	MIN	MAX	MIN	MAX	
1	$t_{c(MRCLK)}$	Cycle time, MRCLK	8		40		400		ns
2	$t_{w(MRCLKH)}$	Pulse duration, MRCLK high	2.8		14		140		ns
3	$t_{w(MRCLKL)}$	Pulse duration, MRCLK low	2.8		14		140		ns
4	$t_{t(MRCLK)}$	Transition time, MRCLK		1		3		3	ns

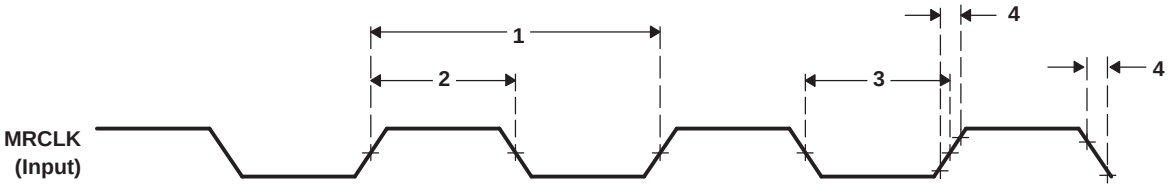

Figure 7-50. MRCLK Timing (EMAC – Receive) [MII and GMII Operation]

Table 7-73. Timing Requirements for MTCLK - MII and GMII Operation (see Figure 7-51)

NO.			-594, -729				UNIT
			100 Mbps		10 Mbps		
			MIN	MAX	MIN	MAX	
1	$t_{c(MTCLK)}$	Cycle time, MTCLK	40		400		ns
2	$t_{w(MTCLKH)}$	Pulse duration, MTCLK high	14		140		ns
3	$t_{w(MTCLKL)}$	Pulse duration, MTCLK low	14		140		ns
4	$t_{t(MTCLK)}$	Transition time, MTCLK		3		3	ns

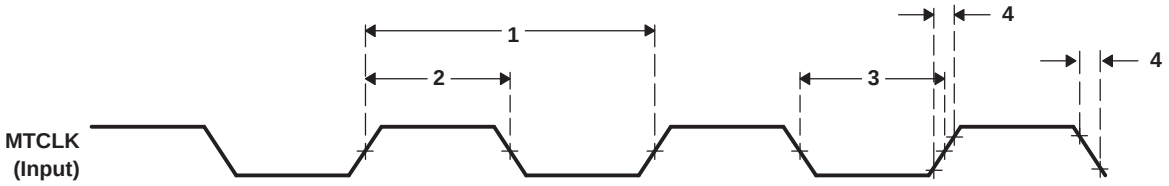

Figure 7-51. MTCLK Timing (EMAC – Transmit) [MII and GMII Operation]

Table 7-74. Timing Requirements for RFTCLK - GMII Operation (see Figure 7-52)

NO.			-594, -729		UNIT
			1000 Mbps		
			MIN	MAX	
1	$t_{c(RFTCLK)}$	Cycle time, RFTCLK	8		ns
2	$t_{w(RFTCLKH)}$	Pulse duration, RFTCLK high	2.8		ns
3	$t_{w(RFTCLKL)}$	Pulse duration, RFTCLK low	2.8		ns
4	$t_{t(RFTCLK)}$	Transition time, RFTCLK		1	ns

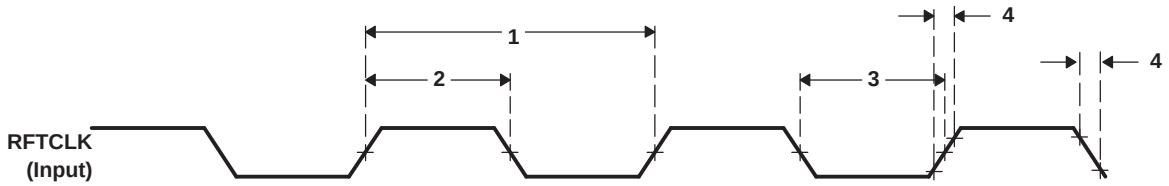

Figure 7-52. RFTCLK Timing [GMII Operation]

Copyright © 2007–2012, Texas Instruments Incorporated

Table 7-75. Switching Characteristics Over Recommended Operating Conditions for GMTCLK - GMII Operation (see Figure 7-53)

NO.	PARAMETER		-594, -729 1000 Mbps MIN	-594, -729 1000 Mbps MAX	UNIT
1	$t_{c(GMTCLK)}$	Cycle time, GMTCLK	8		ns
2	$t_{w(GMTCLKH)}$	Pulse duration, GMTCLK high	2.8		ns
3	$t_{w(GMTCLKL)}$	Pulse duration, GMTCLK low	2.8		ns
4	$t_{t(GMTCLK)}$	Transition time, GMTCLK		1	ns

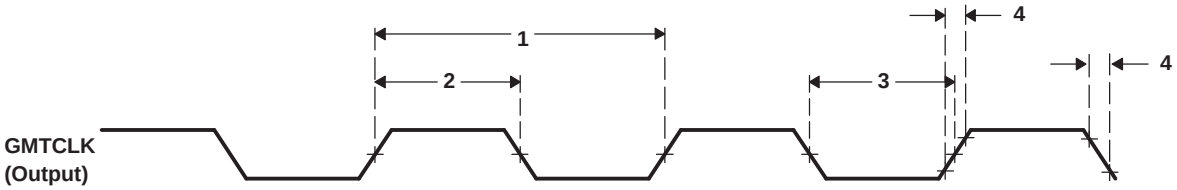

Figure 7-53. GMTCLK Timing (EMAC – Transmit) [GMII Operation]

Table 7-76. Timing Requirements for EMAC MII and GMII Receive 10/100/1000 Mbit/s(1) (see Figure 7-54)

NO.			-594, -729 1000 Mbps MIN	-594, -729 1000 Mbps MAX	-594, -729 100/10 Mbps MIN	-594, -729 100/10 Mbps MAX	UNIT
1	$t_{su(MRXD-MRCLKH)}$	Setup time, receive selected signals valid before MRCLK high	2		8		ns
2	$t_{h(MRCLKH-MRXD)}$	Hold time, receive selected signals valid after MRCLK high	0		8		ns

(1) For **MII**, Receive selected signals include: MRXD[3:0], MRXDV, and MRXER.
For **GMII**, Receive selected signals include: MRXD[7:0], MRXDV, and MRXER.

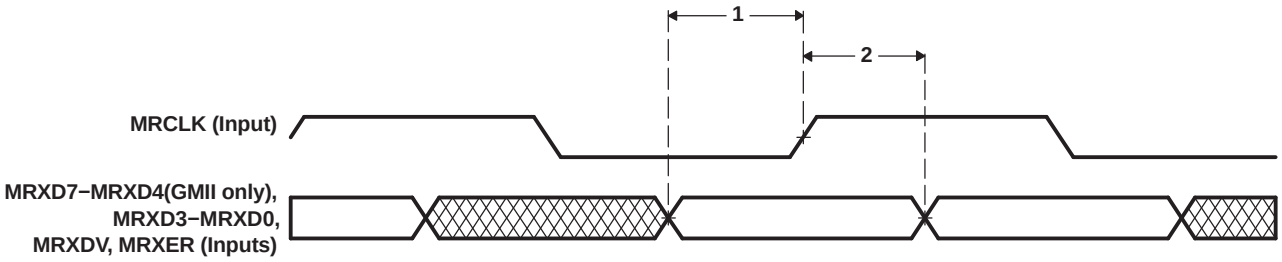

Figure 7-54. EMAC Receive Interface Timing [MII and GMII Operation]

Table 7-77. Switching Characteristics Over Recommended Operating Conditions for EMAC MII and GMII Transmit 10/100 Mbit/s(1) (see Figure 7-55)

NO.	PARAMETER		-594, -729 100/10 Mbps MIN	-594, -729 100/10 Mbps MAX	UNIT
1	$t_{d(MTCLKH-MTXD)}$	Delay time, MTCLK high to transmit selected signals valid	5	25	ns

(1) For **MII**, Transmit selected signals include: MTXD[3:0] and MTXEN.
For **GMII**, Transmit selected signals include: MTXD[7:0] and MTXEN.

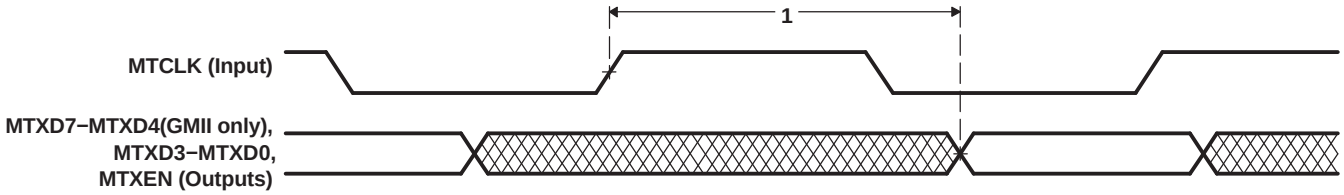

Figure 7-55. EMAC Transmit Interface Timing [MII and GMII Operation]

Table 7-78. Switching Characteristics Over Recommended Operating Conditions for EMAC GMII Transmit 1000 Mbit/s(1) (see Figure 7-56)

NO.	PARAMETER		-594, -729 1000 Mbps MIN	-594, -729 1000 Mbps MAX	UNIT
1	$t_{d(GMTCLKH-MTXD)}$	Delay time, GMTCLK high to transmit selected signals valid	0.5	5	ns

(1) For **GMII**, Transmit selected signals include: MTXD[7:0] and MTXEN.

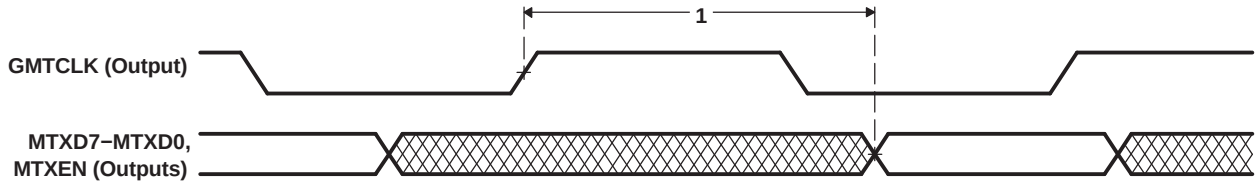

Figure 7-56. EMAC Transmit Interface Timing [GMII Operation]

Copyright © 2007–2012, Texas Instruments Incorporated

7.17 Management Data Input/Output (MDIO)

The Management Data Input/Output (MDIO) module continuously polls all 32 MDIO addresses in order to enumerate all PHY devices in the system.

The Management Data Input/Output (MDIO) module implements the 802.3 serial management interface to interrogate and control Ethernet PHY(s) using a shared two-wire bus. Host software uses the MDIO module to configure the auto-negotiation parameters of each PHY attached to the EMAC, retrieve the negotiation results, and configure required parameters in the EMAC module for correct operation. The module is designed to allow almost transparent operation of the MDIO interface, with very little maintenance from the core processor. Only one PHY may be connected at any given time.

For more detailed information on the MDIO peripheral, see the *TMS320DM646x DMSoC Ethernet Media Access Controller (EMAC)/Management Data Input/Output (MDIO) Module* User's Guide (literature number SPRUEQ6) . For a list of supported registers and register fields, see Table 7-79, MDIO Registers in this data manual.

7.17.1 MDIO Peripheral Register Description(s)

Table 7-79. MDIO Registers

HEX ADDRESS RANGE	ACRONYM	REGISTER NAME
0x01C8 4000	VERSION	MDIO version register
0x01C8 4004	CONTROL	MDIO control register
0x01C8 4008	ALIVE	MDIO PHY alive status register
0x01C8 400C	LINK	MDIO PHY link status register
0x01C8 4010	LINKINTRAW	MDIO link status change interrupt (unmasked) register
0x01C8 4014	LINKINTMASKED	MDIO link status change interrupt (masked) register
0x01C8 4018 - 0x01C8 401F	–	Reserved
0x01C8 4020	USERINTRAW	MDIO user command complete interrupt (unmasked) register
0x01C8 4024	USERINTMASKED	MDIO user command complete interrupt (masked) register
0x01C8 4028	USERINTMASKSET	MDIO user command complete interrupt mask set register
0x01C8 402C	USERINTMASKCLEAR	MDIO user command complete interrupt mask clear register
0x01C8 4030 - 0x01C8 407F	–	Reserved
0x01C8 4080	USERACCESS0	MDIO user access register 0
0x01C8 4084	USERPHYSEL0	MDIO user PHY select register 0
0x01C8 4088	USERACCESS1	MDIO user access register 1
0x01C8 408C	USERPHYSEL1	MDIO user PHY select register 1
0x01C8 4090 - 0x01C8 47FF	–	Reserved

Copyright © 2007–2012, Texas Instruments Incorporated

7.17.2 Management Data Input/Output (MDIO) Electrical Data/Timing

Table 7-80. Timing Requirements for MDIO Input (see Figure 7-57 and Figure 7-58)

NO.			-594, -729		UNIT
			MIN	MAX	
1	$t_{c(MDCLK)}$	Cycle time, MDCLK	400		ns
2	$t_{w(MDCLK)}$	Pulse duration, MDCLK high/low	180		ns
3	$t_{t(MDCLK)}$	Transition time, MDCLK		5	ns
4	$t_{su(MDIO-MDCLKH)}$	Setup time, MDIO data input valid before MDCLK high	10		ns
5	$t_{h(MDCLKH-MDIO)}$	Hold time, MDIO data input valid after MDCLK high	0		ns

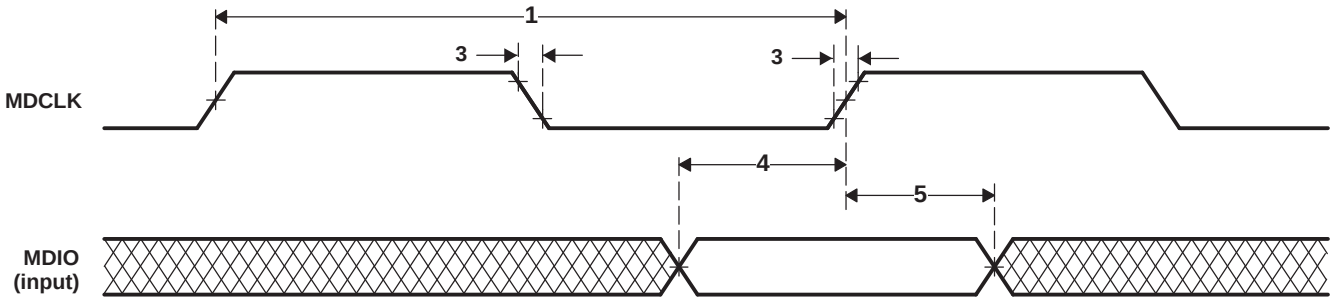

Figure 7-57. MDIO Input Timing

Table 7-81. Switching Characteristics Over Recommended Operating Conditions for MDIO Output (see Figure 7-58)

NO.	PARAMETER		-594, -729		UNIT
			MIN	MAX	
7	$t_{d(MDCLKL-MDIO)}$	Delay time, MDCLK low to MDIO data output valid		100	ns

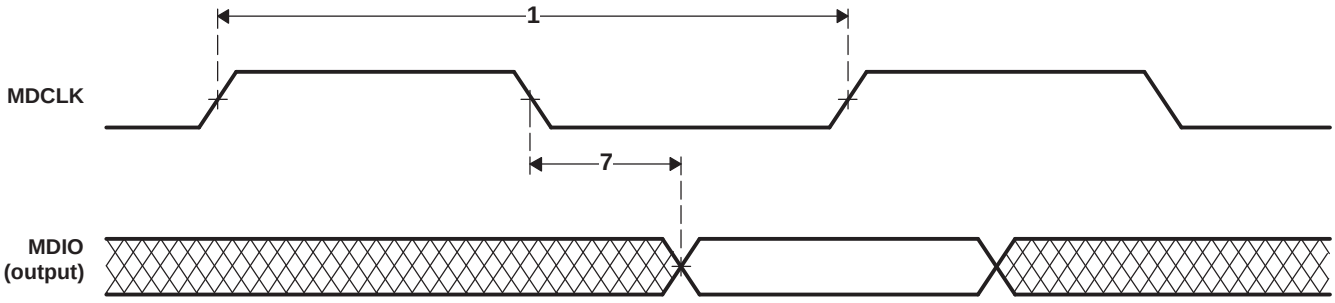

Figure 7-58. MDIO Output Timing

Copyright © 2007–2012, Texas Instruments Incorporated

7.18 Host-Port Interface (HPI) Peripheral

The HPI is a parallel port through which a host processor can directly access the CPU memory space. The host device functions as a master to the interface, which increases ease of access. The host and CPU can exchange information via internal or external memory. The host also has direct access to memory-mapped peripherals. Connectivity to the CPU memory space is provided through the EDMA3 controller.

7.18.1 HPI Device-Specific Information

The DM6467 device includes a user-configurable 32- or 16-bit Host-port interface (HPI32/HPI16).

- Multiplexed (address/data) operation
- Configurable single full-word cycle and dual half-word cycle access modes
- Bursting available utilizing 8-word read and write FIFOs
- HPIA register supports auto-incrementing
- HPID register/FIFOs providing data-path between external host interface and system bus
- Multiple strobes and control signals to allow flexible host connection
- Configurable asynchronous HRDY output to allow HPI to insert wait states to the Host [System Module Register HPICTL.HRDYMODE]
- Software control of data prefetching to the HPID/FIFOs
- DMSoC-to-Host interrupt output signal controlled by HPIC accesses
- Host-to-DMSoC interrupt controlled by HPIC accesses

NOTE: The DM6467 HPI ***does not*** support the $\overline{\text{HAS}}$ feature. For proper HPI operation if the $\overline{\text{HAS}}$ pin (D4) is routed out, the $\overline{\text{HAS}}$ pin ***must*** be pulled up via an external resistor.

The DM6467 HPICTL register (0x01C4 0030) is part of the System Module Registers. The HPICTL register controls write access to the HPI peripheral control and address registers as well as determines the host time-out value. The HPICTL System Module Register also determines the operation of the HRDY output which allows the HPI to insert wait states to the Host. For more detailed information on the HPICTL System Module Register, see Section 4.6.2, *Peripheral Selection After Device Reset*.

For more detailed information on the HPI peripheral, see the *TMS320DM646x DMSoC Host Port Interface (HPI)* User's Guide (literature number SPRUES1).

7.18.2 HPI Bus Master

The HPI peripheral includes a bus master interface that allows external device initiated transfers to access the DM6467 system bus. Table 7-82 shows the memory map for the HPI master interface.

Table 7-82. HPI Master Memory Map

START ADDRESS	END ADDRESS	SIZE (BYTES)	HPI ACCESS
0x0000 0000	0x01BF FFFF	28M	Reserved
0x01C0 0000	0x0FFF FFFF	228M	CFG Bus Peripherals
0x1000 0000	0x1000 FFFF	64K	Reserved
0x1001 0000	0x1001 3FFF	16K	ARM RAM 0 (Data)
0x1001 4000	0x1001 7FFF	16K	ARM RAM 1 (Data)
0x1001 8000	0x1001 FFFF	32K	ARM ROM (Data)

Copyright © 2007–2012, Texas Instruments Incorporated

Table 7-82. HPI Master Memory Map (continued)

START ADDRESS	END ADDRESS	SIZE (BYTES)	HPI ACCESS
0x1002 0000	0x10FF FFFF	16256K	Reserved
0x1100 0000	0x113F FFFF	4M	
0x1140 0000	0x114F FFFF	1M	
0x1150 0000	0x115F FFFF	1M	
0x1160 0000	0x116F FFFF	1M	
0x1170 0000	0x117F FFFF	1M	
0x1180 0000	0x1180 FFFF	64K	
0x1181 0000	0x1181 7FFF	32K	
0x1181 8000	0x1183 7FFF	128K	C64x+ L2 RAM/Cache
0x1183 8000	0x118F FFFF	800K	Reserved
0x1190 0000	0x11DF FFFF	5M	
0x11E0 0000	0x11E0 7FFF	32K	C64x+ L1P RAM/Cache
0x11E0 8000	0x11EF FFFF	992K	Reserved
0x11F0 0000	0x11F0 7FFF	32K	C64x+ L1D RAM/Cache
0x11F0 8000	0x11FF FFFF	992K	Reserved
0x1200 0000	0x4BFF FFFF	928M	
0x4C00 0000	0x4FFF FFFF	64M	VLYNQ (Remote Data)
0x5000 0000	0x7FFF FFFF	768M	Reserved
0x8000 0000	0x9FFF FFFF	512M	DDR2 Memory Controller
0xA000 0000	0xBFFF FFFF	512M	Reserved
0xC000 0000	0xFFFF FFFF	1G	Reserved

7.18.3 HPI Peripheral Register Description(s)

Table 7-83. HPI Control Registers

HEX ADDRESS RANGE	ACRONYM	REGISTER NAME	COMMENTS
01C6 7800	PID	Peripheral Identification Register	
01C6 7804	PWREMU_MGMT	HPI power and emulation management register	The ARM/C64x+ has read/write access to the PWREMU_MGMT register.
01C6 7808 - 01C6 782F	-	Reserved	
01C6 7830	HPIC	HPI control register	The Host and the ARM/C64x+ both have read/write access to the HPIC register.
01C6 7834	HPIA (HPIAW)(1)	HPI address register (Write)	The Host has read/write access to the HPIA registers. The ARM/C64x+ has only read access to the HPIA registers.
01C6 7838	HPIA (HPIAR)(1)	HPI address register (Read)	
01C6 783C - 01C6 7FFF	-	Reserved	

(1) There are two 32-bit HPIA registers: HPIAR for read operations and HPIAW for write operations. The HPI can be configured such that HPIAR and HPIAW act as a single 32-bit HPIA (single-HPIA mode) or as two separate 32-bit HPIAs (dual-HPIA mode) from the perspective of the Host. The ARM/C64x+ can access HPIAW and HPIAR independently. For more details about the HPIA registers and their modes, see the *TMS320DM646x DMSoC Host Port Interface (HPI)* User's Guide (literature number SPRUES1).

Copyright © 2007–2012, Texas Instruments Incorporated

7.18.4 HPI Electrical Data/Timing

Table 7-84. Timing Requirements for Host-Port Interface Cycles(1) (2) (see Figure 7-59 through Figure 7-62)

NO.			-594, -729		UNIT
			MIN	MAX	
1	$t_{su(SELV-HSTBL)}$	Setup time, select signals(3) valid before $\overline{HSTROBE}$ low	5		ns
2	$t_{h(HSTBL-SELV)}$	Hold time, select signals(3) valid after $\overline{HSTROBE}$ low	2		ns
3	$t_{w(HSTBL)}$	Pulse duration, $\overline{HSTROBE}$ active low	15		ns
4	$t_{w(HSTBH)}$	Pulse duration, $\overline{HSTROBE}$ inactive high between consecutive accesses	2M		ns
11	$t_{su(HDV-HSTBH)}$	Setup time, host data valid before $\overline{HSTROBE}$ high	5		ns
12	$t_{h(HSTBH-HDV)}$	Hold time, host data valid after $\overline{HSTROBE}$ high	0.15		ns
13	$t_{h(HRDYL-HSTBL)}$	Hold time, $\overline{HSTROBE}$ low after $\overline{HRDY}$ low. $\overline{HSTROBE}$ should not be inactivated until $\overline{HRDY}$ is active (low); otherwise, HPI writes will not complete properly.	0		ns

(1) $\overline{HSTROBE}$ refers to the following logical operation on $\overline{HCS}$, $\overline{HDS1}$, and $\overline{HDS2}$: [NOT($\overline{HDS1}$ XOR $\overline{HDS2}$)] OR $\overline{HCS}$.
(2) M = SYSCLK3 period = (CPU clock frequency)/4 in ns. For example, when running parts at 594 MHz, use M = M = 1.68 ns.
(3) Select signals include: HCNTL[1:0], HR/$\overline{W}$. For HPI16 mode only, select signals also includes HHWIL.

Copyright © 2007–2012, Texas Instruments Incorporated

Table 7-85. Switching Characteristics for Host-Port Interface Cycles(1) (2) (3) (see Figure 7-59 through Figure 7-62)

NO.	PARAMETER			-594, -729 MIN	-594, -729 MAX	UNIT
5	$t_{d(HSTBL-HRDYV)}$	Delay time, HSTROBE low to HRDY valid	For HPI Write, HRDY can go high (*not ready*) for these HPI Write conditions; otherwise, HRDY stays low (*ready*): *Case 1*: Back-to-back HPIA writes (can be either first or second half-word) *Case 2*: HPIA write following a PREFETCH command (can be either first or second half-word) *Case 3*: HPID write when FIFO is full or flushing (can be either first or second half-word) *Case 4*: HPIA write and Write FIFO not empty For HPI Read, HRDY can go high (*not ready*) for these HPI Read conditions: *Case 1*: HPID read (with auto-increment) and data not in Read FIFO (can only happen to first half-word of HPID access) *Case 2*: First half-word access of HPID Read without auto-increment For HPI Read, HRDY stays low (*ready*) for these HPI Read conditions: *Case 1*: HPID read with auto-increment and data is already in Read FIFO (applies to either half-word of HPID access) *Case 2*: HPID read without auto-increment and data is already in Read FIFO (always applies to second half-word of HPID access) *Case 3*: HPIC or HPIA read (applies to either half-word access)		12	ns
6	$t_{en(HSTBL-HD)}$	Enable time, HD driven from HSTROBE low		2		ns
7	$t_{d(HRDYL-HDV)}$	Delay time, HRDY low to HD valid			0	ns
8	$t_{oh(HSTBH-HDV)}$	Output hold time, HD valid after HSTROBE high		1.5		ns
14	$t_{dis(HSTBH-HDV)}$	Disable time, HD high-impedance from HSTROBE high			12	ns
15	$t_{d(HSTBL-HDV)}$	Delay time, HSTROBE low to HD valid	For HPI Read. Applies to conditions where data is already residing in HPID/FIFO: *Case 1*: HPIC or HPIA read *Case 2*: First half-word of HPID read with auto-increment and data is already in Read FIFO *Case 3*: Second half-word of HPID read with or without auto-increment		12	ns

(1) M = SYSCLK3 period = (CPU clock frequency)/4 in ns. For example, when running parts at 594 MHz, use M = 1.68 ns.
(2) HSTROBE refers to the following logical operation on HCS, HDS1, and HDS2: [NOT(HDS1 XOR HDS2)] OR HCS.
(3) By design, whenever HCS is driven inactive (high), HPI will drive HRDY active (low).

Copyright © 2007–2012, Texas Instruments Incorporated

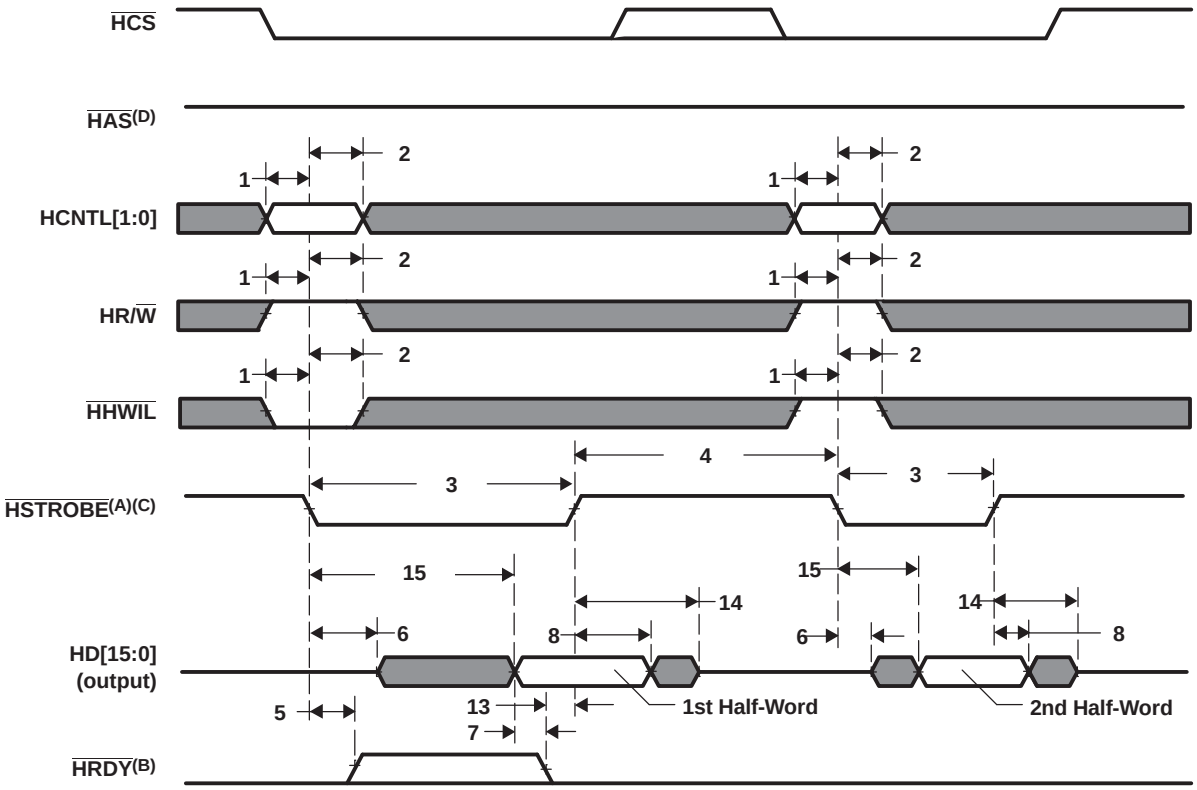

A. HSTROBE refers to the following logical operation on HCS, HDS1, and HDS2: [NOT(HDS1 XOR HDS2)] OR HCS.
B. Depending on the type of write or read operation (HPID without auto-incrementing; HPIA, HPIC, or HPID with auto-incrementing) and the state of the FIFO, transitions on HRDY may or may not occur.
For more detailed information on the HPI peripheral, see the *TMS320DM646x DMSoC Host Port Interface (HPI)* User's Guide (literature number SPRUES1).
C. HCS reflects typical HCS behavior when HSTROBE assertion is caused by HDS1 or HDS2. HCS timing requirements are reflected by parameters for HSTROBE.
D. For proper HPI operation, HAS **must** be pulled up via an external resistor.

Figure 7-59. HPI16 Read Timing (HAS Not Used, Tied High)

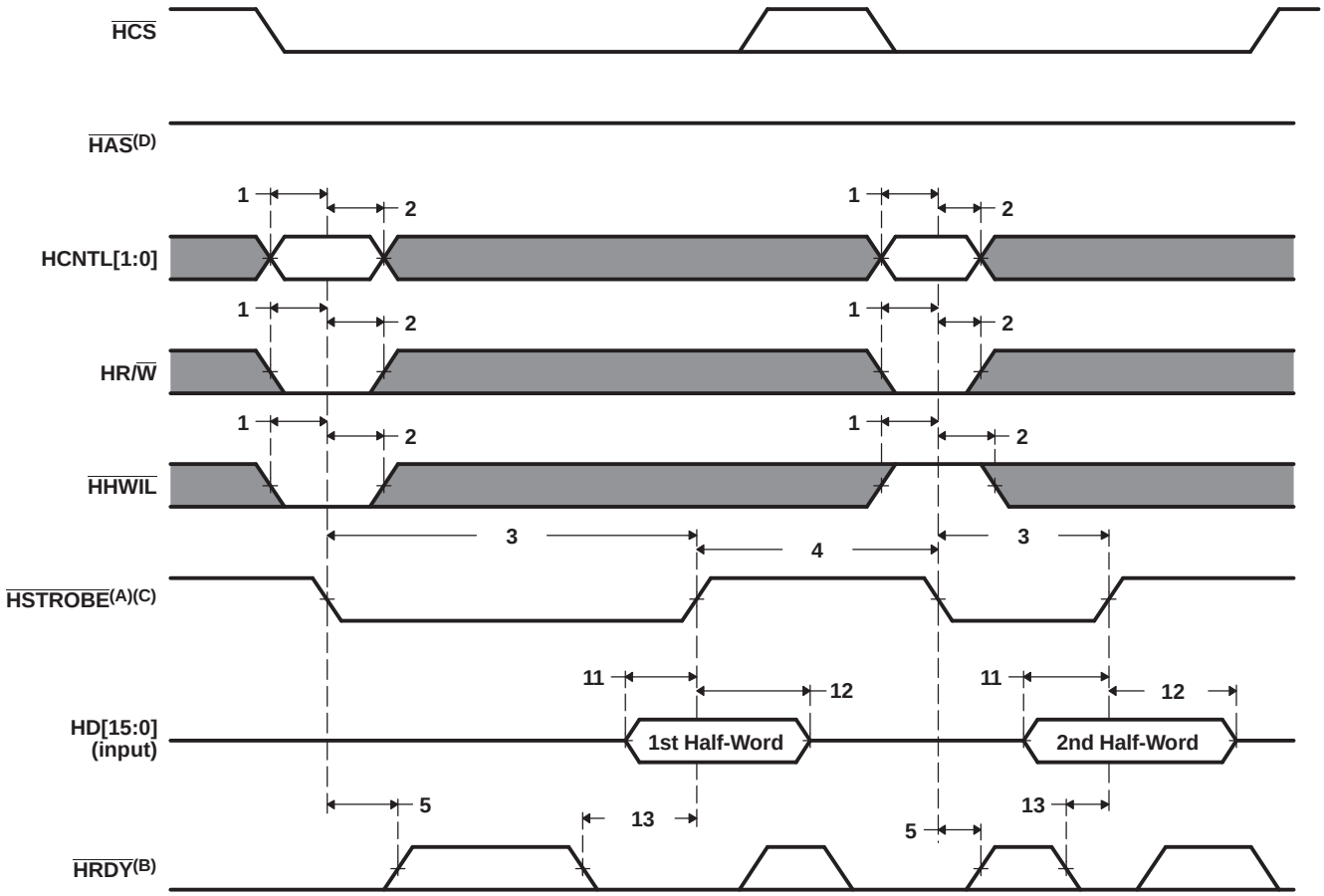

A. HSTROBE refers to the following logical operation on HCS, HDS1, and HDS2: [NOT(HDS1 XOR HDS2)] OR HCS.

B. Depending on the type of write or read operation (HPID without auto-incrementing; HPIA, HPIC, or HPID with auto-incrementing) and the state of the FIFO, transitions on HRDY may or may not occur.
For more detailed information on the HPI peripheral, see the *TMS320DM646x DMSoC Host Port Interface (HPI)* User's Guide (literature number SPRUES1).

C. HCS reflects typical HCS behavior when HSTROBE assertion is caused by HDS1 or HDS2. HCS timing requirements are reflected by parameters for HSTROBE.

D. For proper HPI operation, HAS **must** be pulled up via an external resistor.

Figure 7-60. HPI16 Write Timing (HAS Not Used, Tied High)

Copyright © 2007–2012, Texas Instruments Incorporated

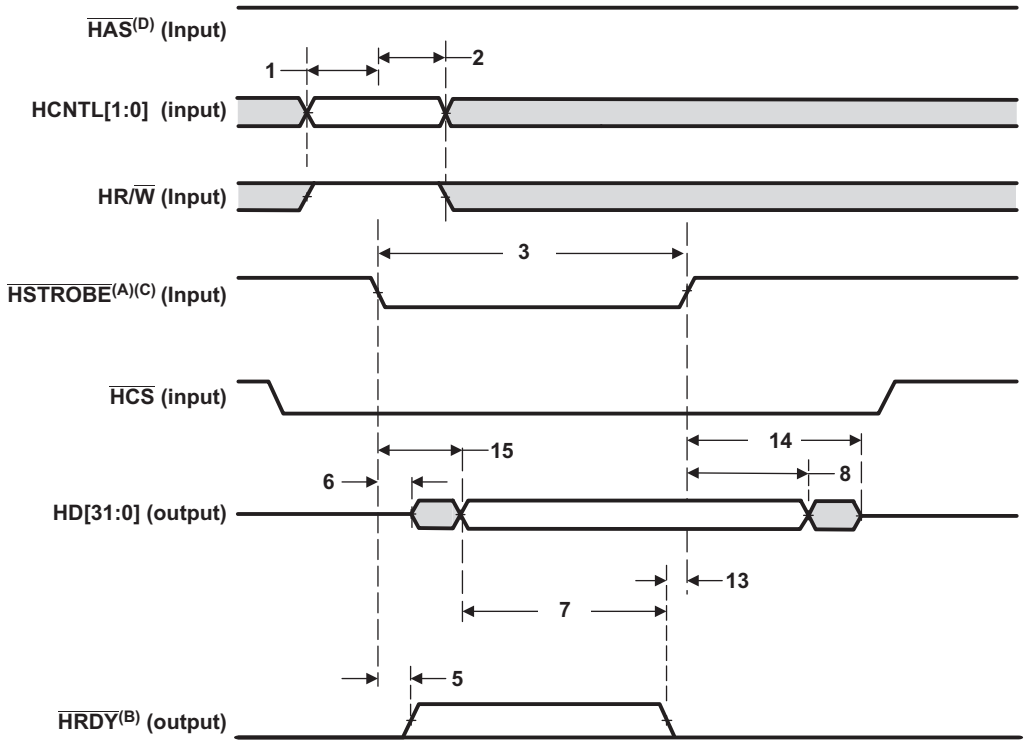

A. HSTROBE refers to the following logical operation on HCS, HDS1, and HDS2: [NOT(HDS1 XOR HDS2)] OR HCS.
B. Depending on the type of write or read operation (HPID without auto-incrementing; HPIA, HPIC, or HPID with auto-incrementing) and the state of the FIFO, transitions on HRDY may or may not occur.
For more detailed information on the HPI peripheral, see the *TMS320DM646x DMSoC Host Port Interface (HPI)* User's Guide (literature number SPRUES1).
C. HCS reflects typical HCS behavior when HSTROBE assertion is caused by HDS1 or HDS2. HCS timing requirements are reflected by parameters for HSTROBE.
D. For Proper HPI operation, HAS **must** be pulled up via an external resistor.

Figure 7-61. HPI32 Read Timing (HAS Not Used, Tied High)

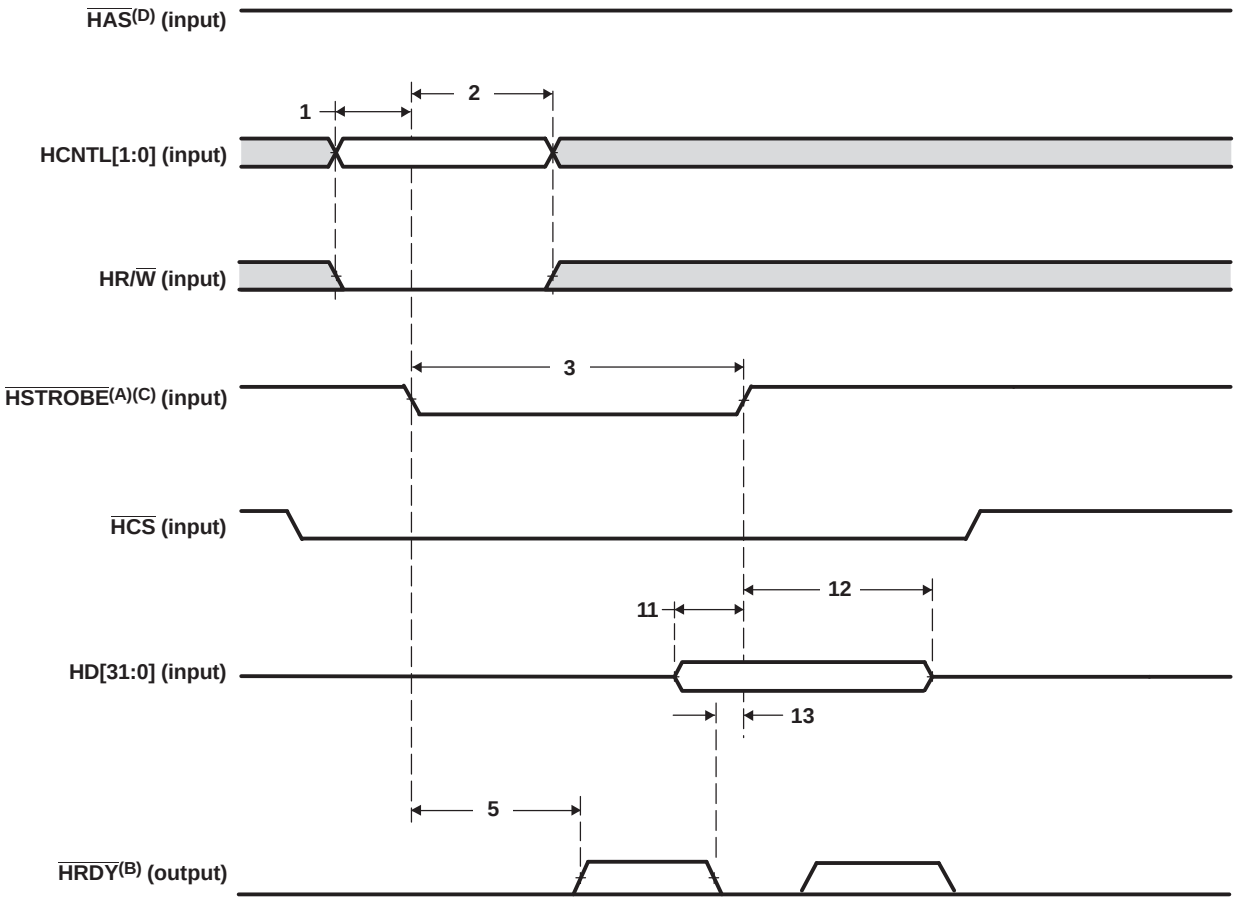

A. HSTROBE refers to the following logical operation on HCS, HDS1, and HDS2: [NOT(HDS1 XOR HDS2)] OR HCS.

B. Depending on the type of write or read operation (HPID without auto-incrementing; HPIA, HPIC, or HPID with auto-incrementing) and the state of the FIFO, transitions on HRDY may or may not occur.
For more detailed information on the HPI peripheral, see the *TMS320DM646x DMSoC Host Port Interface (HPI)* User's Guide (literature number SPRUES1).

C. HCS reflects typical HCS behavior when HSTROBE assertion is caused by HDS1 or HDS2. HCS timing requirements are reflected by parameters for HSTROBE.

D. For proper HPI operation, HAS **must** be pulled up via an external resistor.

Figure 7-62. HPI32 Write Timing (HAS Not Used, Tied High)

Copyright © 2007–2012, Texas Instruments Incorporated

7.19 USB 2.0

The DM6467 USB2.0 peripheral supports the following features:

- USB 2.0 peripheral at speeds high speed (HS: 480 Mb/s) and full speed (FS: 12 Mb/s)
- USB 2.0 host at speeds HS, FS, and low speed (LS: 1.5 Mb/s)
- Each endpoint (other than endpoint 0) can support all transfer modes (control, bulk, interrupt, and isochronous)
- 4 Transmit (TX) and 4 Receive (RX) endpoints in addition to endpoint 0
- FIFO RAM
  - 4K endpoint
  - Programmable size
- Connects to a standard UTMI+ PHY with a 60-MHz, 8-bit interface
- External 5-V power supply for VBUS, when operating as Host, enabled directly by the USB controller via a dedicated signal
- RNDIS mode for accelerating RNDIS type protocols using short packet termination over USB

7.19.1 USB DMA Master

The USB2.0 peripheral interface includes a master DMA engine that allows the USB to access the DM6467 system bus. Table 7-86 shows the memory map for the USB2.0 DMA engine.

Table 7-86. USB2.0 DMA Master Memory Map

START ADDRESS	END ADDRESS	SIZE (BYTES)	USB2.0 DMA ACCESS
0x0000 0000	0x0FFF FFFF	256M	Reserved
0x1000 0000	0x1000 FFFF	64K	Reserved
0x1001 0000	0x1001 3FFF	16K	ARM RAM 0 (Data)
0x1001 4000	0x1001 7FFF	16K	ARM RAM 1 (Data)
0x1001 8000	0x1001 FFFF	32K	ARM ROM (Data)
0x1002 0000	0x10FF FFFF	16256K	Reserved
0x1100 0000	0x113F FFFF	4M	
0x1140 0000	0x114F FFFF	1M	
0x1150 0000	0x115F FFFF	1M	
0x1160 0000	0x116F FFFF	1M	
0x1170 0000	0x117F FFFF	1M	
0x1180 0000	0x1180 FFFF	64K	
0x1181 0000	0x1181 7FFF	32K	
0x1181 8000	0x1183 7FFF	128K	C64x+ L2 RAM/Cache
0x1183 8000	0x118F FFFF	800K	Reserved
0x1190 0000	0x11DF FFFF	5M	
0x11E0 0000	0x11E0 7FFF	32K	C64x+ L1P RAM/Cache
0x11E0 8000	0x11EF FFFF	992K	Reserved
0x11F0 0000	0x11F0 7FFF	32K	C64x+ L1D RAM/Cache
0x11F0 8000	0x11FF FFFF	992K	Reserved
0x1200 0000	0x4BFF FFFF	928M	
0x4C00 0000	0x4FFF FFFF	64M	VLYNQ (Remote Data)
0x5000 0000	0x7FFF FFFF	768M	Reserved
0x8000 0000	0x9FFF FFFF	512M	DDR2 Memory Controller
0xA000 0000	0xBFFF FFFF	512M	Reserved

Copyright © 2007–2012, Texas Instruments Incorporated

Table 7-86. USB2.0 DMA Master Memory Map (continued)

START ADDRESS	END ADDRESS	SIZE (BYTES)	USB2.0 DMA ACCESS
0xC000 0000	0xFFFF FFFF	1G	Reserved

7.19.2 USB2.0 Device-Specific Information

The DM6467 USBCTL register (0x01C4 00034) is part of the System Module Registers. The USBCTL register controls the USB data polarity, host/peripheral mode, and VBUS sense, along with the PHY power and clock good, PHY PLL suspend override, and PHY power down. For more detailed information on the USBCTL System Module Register, see Section 4.6.2, *Peripheral Selection After Device Reset*

For more detailed information on the USB2.0 peripheral, see the *TMS320DM646x DMSoC Universal Serial Bus (USB) Controller* User's Guide (literature number SPRUER7).

Copyright © 2007–2012, Texas Instruments Incorporated

7.19.3 USB2.0 Peripheral Register Description(s)

Table 7-87 shows the USB perripheral register memory mapping.

Table 7-87. USB2.0 Registers

HEX ADDRESS RANGE	ACRONYM	REGISTER NAME
0x01C6 4000	REVR	Revision Register
0x01C6 4004	CTRLR	Control Register
0x01C6 4008	STATR	Status Register
0x01C6 400C - 0x01C6 400F	–	Reserved
0x01C6 4010	RNDISR	RNDIS Register
0x01C6 4014	AUTOREQ	Auto Request Register
0x01C6 4018 - 0x01C6 401F	–	Reserved
0x01C6 4020	INTSRCR	USB Interrupt Source Register
0x01C6 4024	INTSETR	USB Interrupt Source Set Register
0x01C6 4028	INTCLRR	USB Interrupt Source Clear Register
0x01C6 402C	INTMSKR	USB Interrupt Mask Register
0x01C6 4030	INTMSKSETR	USB Interrupt Mask Set Register
0x01C6 4034	INTMSKCLRR	USB Interrupt Mask Clear Register
0x01C6 4038	INTMASKEDR	USB Interrupt Source Masked Register
0x01C6 403C	EOIR	USB End of Interrupt Register
0x01C6 4040	INTVECTR	USB Interrupt Vector Register
0x01C6 4044 - 0x01C6 407F	–	Reserved
0x01C6 4080	TCPPICR	TX CPPI Control Register
0x01C6 4084	TCPPITDR	TX CPPI Teardown Register
0x01C6 4088	TCPPIEOIR	TX CPPI DMA Controller End of Interrupt Register
0x01C6 408C	TCPPIIVECTR	TX CPPI DMA Controller Interrupt Vector Register
0x01C6 4090	TCPPIMSKSR	TX CPPI Masked Status Register
0x01C6 4094	TCPPIRAWSR	TX CPPI Raw Status Register
0x01C6 4098	TCPPIIENSETR	TX CPPI Interrupt Enable Set Register
0x01C6 409C	TCPPIIENCLRR	TX CPPI Interrupt Enable Clear Register
0x01C6 40A0 - 0x01C6 40BF	–	Reserved
0x01C6 40C0	RCPPICR	RX CPPI Control Register
0x01C6 40C4 - 0x01C6 40CF	–	Reserved
0x01C6 40D0	RCPPIMSKSR	RX CPPI Masked Status Register
0x01C6 40D4	RCPPIRAWSR	RX CPPI Raw Status Register
0x01C6 40D8	RCPPIENSETR	RX CPPI Interrupt Enable Set Register
0x01C6 40DC	RCPPIIENCLRR	RX CPPI Interrupt Enable Clear Register
0x01C6 40E0	RBUFCNT0	RX Buffer Count 0 Register
0x01C6 40E4	RBUFCNT1	RX Buffer Count 1 Register
0x01C6 40E8	RBUFCNT2	RX Buffer Count 2 Register
0x01C6 40EC	RBUFCNT3	RX Buffer Count 3 Register
0x01C6 40F0 - 0x01C6 40FF	–	Reserved
TX/RX CCPI Channel 0 State Block		
0x01C6 4100	TCPPIDMASTATEW0	TX CPPI DMA State Word 0

Table 7-87. USB2.0 Registers (continued)

HEX ADDRESS RANGE	ACRONYM	REGISTER NAME
0x01C6 4104	TCPPIDMASTATEW1	TX CPPI DMA State Word 1
0x01C6 4108	TCPPIDMASTATEW2	TX CPPI DMA State Word 2
0x01C6 410C	TCPPIDMASTATEW3	TX CPPI DMA State Word 3
0x01C6 4110	TCPPIDMASTATEW4	TX CPPI DMA State Word 4
0x01C6 4114	TCPPIDMASTATEW5	TX CPPI DMA State Word 5
0x01C6 4118	–	Reserved
0x01C6 411C	TCPPICOMPPTR	TX CPPI Completion Pointer
0x01C6 4120	RCPPIDMASTATEW0	RX CPPI DMA State Word 0
0x01C6 4124	RCPPIDMASTATEW1	RX CPPI DMA State Word 1
0x01C6 4128	RCPPIDMASTATEW2	RX CPPI DMA State Word 2
0x01C6 412C	RCPPIDMASTATEW3	RX CPPI DMA State Word 3
0x01C6 4130	RCPPIDMASTATEW4	RX CPPI DMA State Word 4
0x01C6 4134	RCPPIDMASTATEW5	RX CPPI DMA State Word 5
0x01C6 4138	RCPPIDMASTATEW6	RX CPPI DMA State Word 6
0x01C6 413C	RCPPICOMPPTR	RX CPPI Completion Pointer
TX/RX CCPI Channel 1 State Block		
0x01C6 4140	TCPPIDMASTATEW0	TX CPPI DMA State Word 0
0x01C6 4144	TCPPIDMASTATEW1	TX CPPI DMA State Word 1
0x01C6 4148	TCPPIDMASTATEW2	TX CPPI DMA State Word 2
0x01C6 414C	TCPPIDMASTATEW3	TX CPPI DMA State Word 3
0x01C6 4150	TCPPIDMASTATEW4	TX CPPI DMA State Word 4
0x01C6 4154	TCPPIDMASTATEW5	TX CPPI DMA State Word 5
0x01C6 4158	–	Reserved
0x01C6 415C	TCPPICOMPPTR	TX CPPI Completion Pointer
0x01C6 4160	RCPPIDMASTATEW0	RX CPPI DMA State Word 0
0x01C6 4164	RCPPIDMASTATEW1	RX CPPI DMA State Word 1
0x01C6 4168	RCPPIDMASTATEW2	RX CPPI DMA State Word 2
0x01C6 416C	RCPPIDMASTATEW3	RX CPPI DMA State Word 3
0x01C6 4170	RCPPIDMASTATEW4	RX CPPI DMA State Word 4
0x01C6 4174	RCPPIDMASTATEW5	RX CPPI DMA State Word 5
0x01C6 4178	RCPPIDMASTATEW6	RX CPPI DMA State Word 6
0x01C6 417C	RCPPICOMPPTR	RX CPPI Completion Pointer
TX/RX CCPI Channel 2 State Block		
0x01C6 4180	TCPPIDMASTATEW0	TX CPPI DMA State Word 0
0x01C6 4184	TCPPIDMASTATEW1	TX CPPI DMA State Word 1
0x01C6 4188	TCPPIDMASTATEW2	TX CPPI DMA State Word 2
0x01C6 418C	TCPPIDMASTATEW3	TX CPPI DMA State Word 3
0x01C6 4190	TCPPIDMASTATEW4	TX CPPI DMA State Word 4
0x01C6 4194	TCPPIDMASTATEW5	TX CPPI DMA State Word 5
0x01C6 4198	–	Rserved
0x01C6 419C	TCPPICOMPPTR	TX CPPI Completion Pointer
0x01C6 41A0	RCPPIDMASTATEW0	RX CPPI DMA State Word 0
0x01C6 41A4	RCPPIDMASTATEW1	RX CPPI DMA State Word 1
0x01C6 41A8	RCPPIDMASTATEW2	RX CPPI DMA State Word 2
0x01C6 41AC	RCPPIDMASTATEW3	RX CPPI DMA State Word 3
0x01C6 41B0	RCPPIDMASTATEW4	RX CPPI DMA State Word 4
0x01C6 41B4	RCPPIDMASTATEW5	RX CPPI DMA State Word 5

Copyright © 2007–2012, Texas Instruments Incorporated

Table 7-87. USB2.0 Registers (continued)

HEX ADDRESS RANGE	ACRONYM	REGISTER NAME
0x01C6 41B8	RCPPIDMASTATEW6	RX CPPI DMA State Word 6
0x01C6 41BC	RCPPICOMPPTR	RX CPPI Completion Pointer
TX/RX CCPI Channel 3 State Block		
0x01C6 41C0	TCPPIDMASTATEW0	TX CPPI DMA State Word 0
0x01C6 41C4	TCPPIDMASTATEW1	TX CPPI DMA State Word 1
0x01C6 41C8	TCPPIDMASTATEW2	TX CPPI DMA State Word 2
0x01C6 41CC	TCPPIDMASTATEW3	TX CPPI DMA State Word 3
0x01C6 41D0	TCPPIDMASTATEW4	TX CPPI DMA State Word 4
0x01C6 41D4	TCPPIDMASTATEW5	TX CPPI DMA State Word 5
0x01C6 41D8	–	Rserved
0x01C6 41DC	TCPPICOMPPTR	TX CPPI Completion Pointer
0x01C6 41E0	RCPPIDMASTATEW0	RX CPPI DMA State Word 0
0x01C6 41E4	RCPPIDMASTATEW1	RX CPPI DMA State Word 1
0x01C6 41E8	RCPPIDMASTATEW2	RX CPPI DMA State Word 2
0x01C6 41EC	RCPPIDMASTATEW3	RX CPPI DMA State Word 3
0x01C6 41F0	RCPPIDMASTATEW4	RX CPPI DMA State Word 4
0x01C6 41F4	RCPPIDMASTATEW5	RX CPPI DMA State Word 5
0x01C6 41F8	RCPPIDMASTATEW6	RX CPPI DMA State Word 6
0x01C6 41FC	RCPPICOMPPTR	RX CPPI Completion Pointer
0x01C6 4200 - 0x01C6 43FF	–	Reserved
Core Registers		
0x01C6 4400	FADDR	Function Address Register
0x01C6 4401	POWER	Power Management Register
0x01C6 4402	INTRTX	Interrupt Register for Endpoint 0 plus TX Endpoints 1 to 4
0x01C6 4404	INTRRX	Interrupt Register for RX Endpoints 1 to 4
0x01C6 4406	INTRTXE	Interrupt Enable Register for INTRTX
0x01C6 4408	INTRRXE	Interrupt Enable Register for INTRRX
0x01C6 440A	INTRUSB	Interrupt Register for Common USB Interrupts
0x01C6 440B	INTRUSBE	Interrupt Enable Register for INTRUSB
0x01C6 440C	FRAME	Frame Number Register
0x01C6 440E	INDEX	Index register for selecting the endpoint status and control registers
0x01C6 440F	TESTMODE	Register to enable the USB 2.0 test modes
0x01C6 4410	TXMAXP	Maximum packet size for peripheral/host TX endpoint (Index register set to select Endpoints 1 - 4 only)
0x01C6 4412	PERI_CSR0	Control Status register for Endpoint 0 in Peripheral mode. (Index register set to select Endpoint 0)
	HOST_CSR0	Control Status register for Endpoint 0 in Host mode. (Index register set to select Endpoint 0)
	PERI_TXCSR	Control Status register for peripheral TX endpoint. (Index register set to select Endpoints 1 - 4)
	HOST_TXCSR	Control Status register for host TX endpoint. (Index register set to select Endpoints 1 - 4)
0x01C6 4414	RXMAXP	Maximum packet size for peripheral/host RX endpoint (Index register set to select Endpoints 1 - 4 only)
0x01C6 4416	PERI_RXCSR	Control Status register for peripheral RX endpoint. (Index register set to select Endpoints 1 - 4)
	HOST_RXCSR	Control Status register for host RX endpoint. (Index register set to select Endpoints 1 - 4)

Copyright © 2007–2012, Texas Instruments Incorporated

Table 7-87. USB2.0 Registers (continued)

HEX ADDRESS RANGE	ACRONYM	REGISTER NAME
0x01C6 4418	COUNT0	Number of received bytes in Endpoint 0 FIFO. (Index register set to select Endpoint 0)
	RXCOUNT	Number of bytes in host RX endpoint FIFO. (Index register set to select Endpoints 1 - 4)
0x01C6 441A	HOST_TYPE0	Defines the speed of Endpoint 0
0x01C6 441A	HOST_TXTYPE	Sets the operating speed, transaction protocol and peripheral endpoint number for the host TX endpoint. (Index register set to select Endpoints 1 - 4 only)
0x01C6 441B	HOST_NAKLIMIT0	Sets the NAK response timeout on Endpoint 0. (Index register set to select Endpoint 0)
0x01C6 441B	HOST_TXINTERVAL	Sets the polling interval for Interrupt/ISOC transactions or the NAK response timeout on Bulk transactions for host TX endpoint. (Index register set to select Endpoints 1 - 4 only)
0x01C6 441C	HOST_RXTYPE	Sets the operating speed, transaction protocol and peripheral endpoint number for the host RX endpoint. (Index register set to select Endpoints 1 - 4 only)
0x01C6 441D	HOST_RXINTERVAL	Sets the polling interval for Interrupt/ISOC transactions or the NAK response timeout on Bulk transactions for host RX endpoint. (Index register set to select Endpoints 1 - 4 only)
0x01C6 441F	CONFIGDATA	Returns details of core configuration (Index register set to select Endpoint 0)
0x01C6 4420	FIFO0	TX and RX FIFO Register for Endpoint 0
0x01C6 4424	FIFO1	TX and RX FIFO Register for Endpoint 1
0x01C6 4428	FIFO2	TX and RX FIFO Register for Endpoint 2
0x01C6 442C	FIFO3	TX and RX FIFO Register for Endpoint 3
0x01C6 4430	FIFO4	TX and RX FIFO Register for Endpoint 4
0x01C6 4460	DEVCTL	Device Control Register
0x01C6 4462	TXFIFOSZ	TX Endpoint FIFO Size (Index register set to select Endpoints 0 - 4 only)
0x01C6 4463	RXFIFOSZ	RX Endpoint FIFO Size (Index register set to select Endpoints 0 - 4 only)
0x01C6 4464	TXFIFOADDR	TX Endpoint FIFO Address (Index register set to select Endpoints 0 - 4 only)
0x01C6 4466	RXFIFOADDR	RX Endpoint FIFO Address (Index register set to select Endpoints 0 - 4 only)
Target Endpoint Control Registers (Valid Only in Host Mode) - EPTRG0		
0x01C6 4480	TXFUNCADDR	Address of the target function that has to be accessed through the associated TX Endpoint
0x01C6 4482	TXHUBADDR	Address of the hub that has to be accessed through the associated TX Endpoint. This is used only when full-speed or low-speed device is connected via a USB2.0 high-speed hub.
0x01C6 4483	TXHUBPORT	Port of the hub that has to be accessed through the associated TX Endpoint. This is used only when full-speed or low-speed device is connected via a USB2.0 high-speed hub.
0x01C6 4484	RXFUNCADDR	Address of the target function that has to be accessed through the associated RX Endpoint
0x01C6 4486	RXHUBADDR	Address of the hub that has to be accessed through the associated RX Endpoint. This is used only when full-speed or low-speed device is connected via a USB2.0 high-speed hub.
0x01C6 4487	RXHUBPORT	Port of the hub that has to be accessed through the associated RX Endpoint. This is used only when full speed or low speed device is connected via a USB2.0 high speed hub
Target Endpoint Control Registers (Valid Only in Host Mode) - EPTRG1		
0x01C6 4488	TXFUNCADDR	Address of the target function that has to be accessed through the associated TX Endpoint
0x01C6 448A	TXHUBADDR	Address of the hub that has to be accessed through the associated TX Endpoint. This is used only when full-speed or low-speed device is connected via a USB2.0 high-speed hub.
0x01C6 448B	TXHUBPORT	Port of the hub that has to be accessed through the associated TX Endpoint. This is used only when full-speed or low-speed device is connected via a USB2.0 high-speed hub.

Copyright © 2007–2012, Texas Instruments Incorporated

Table 7-87. USB2.0 Registers (continued)

HEX ADDRESS RANGE	ACRONYM	REGISTER NAME
0x01C6 448C	RXFUNCADDR	Address of the target function that has to be accessed through the associated RX Endpoint
0x01C6 448E	RXHUBADDR	Address of the hub that has to be accessed through the associated RX Endpoint. This is used only when full-speed or low-speed device is connected via a USB2.0 high speed hub
0x01C6 448F	RXHUBPORT	Port of the hub that has to be accessed through the associated RX Endpoint. This is used only when full speed or low speed device is connected via a USB2.0 high-speed hub.
Target Endpoint Control Registers (Valid Only in Host Mode) - EPTRG2		
0x01C6 4490	TXFUNCADDR	Address of the target function that has to be accessed through the associated TX Endpoint
0x01C6 4492	TXHUBADDR	Address of the hub that has to be accessed through the associated TX Endpoint. This is used only when full-speed or low-speed device is connected via a USB2.0 high-speed hub.
0x01C6 4493	TXHUBPORT	Port of the hub that has to be accessed through the associated TX Endpoint. This is used only when full-speed or low-speed device is connected via a USB2.0 high-speed hub.
0x01C6 4494	RXFUNCADDR	Address of the target function that has to be accessed through the associated RX Endpoint
0x01C6 4496	RXHUBADDR	Address of the hub that has to be accessed through the associated RX Endpoint. This is used only when full-speed or low-speed device is connected via a USB2.0 high-speed hub.
0x01C6 4497	RXHUBPORT	Port of the hub that has to be accessed through the associated RX Endpoint. This is used only when full-speed or low-speed device is connected via a USB2.0 high-speed hub.
Target Endpoint Control Registers (Valid Only in Host Mode) - EPTRG3		
0x01C6 4498	TXFUNCADDR	Address of the target function that has to be accessed through the associated TX Endpoint
0x01C6 449A	TXHUBADDR	Address of the hub that has to be accessed through the associated TX Endpoint. This is used only when full-speed or low-speed device is connected via a USB2.0 high-speed hub.
0x01C6 449B	TXHUBPORT	Port of the hub that has to be accessed through the associated TX Endpoint. This is used only when full -peed or low-speed device is connected via a USB2.0 high-speed hub.
0x01C6 449C	RXFUNCADDR	Address of the target function that has to be accessed through the associated RX Endpoint
0x01C6 449E	RXHUBADDR	Address of the hub that has to be accessed through the associated RX Endpoint. This is used only when full-speed or low-speed device is connected via a USB2.0 high-speed hub.
0x01C6 449F	RXHUBPORT	Port of the hub that has to be accessed through the associated RX Endpoint. This is used only when full-speed or low-speed device is connected via a USB2.0 high-speed hub.
Target Endpoint Control Registers (Valid Only in Host Mode) - EPTRG4		
0x01C6 44A0	TXFUNCADDR	Address of the target function that has to be accessed through the associated TX Endpoint
0x01C6 44A2	TXHUBADDR	Address of the hub that has to be accessed through the associated TX Endpoint. This is used only when full-speed or low-speed device is connected via a USB2.0 high-speed hub.
0x01C6 44A3	TXHUBPORT	Port of the hub that has to be accessed through the associated TX Endpoint. This is used only when full-speed or low-speed device is connected via a USB2.0 high-speed hub.
0x01C6 44A4	RXFUNCADDR	Address of the target function that has to be accessed through the associated RX Endpoint
0x01C6 44A6	RXHUBADDR	Address of the hub that has to be accessed through the associated RX Endpoint. This is used only when full-speed or low-speed device is connected via a USB2.0 high-speed hub.

Copyright © 2007–2012, Texas Instruments Incorporated

Table 7-87. USB2.0 Registers (continued)

HEX ADDRESS RANGE	ACRONYM	REGISTER NAME
0x01C6 44A7	RXHUBPORT	Port of the hub that has to be accessed through the associated RX Endpoint. This is used only when full-speed or low-speed device is connected via a USB2.0 high-speed hub.
Control and Status Register for Endpoint 0 - EOCSR0		
0x01C6 4502	PERI_CSR0	Control Status Register for Endpoint 0 in Peripheral mode
	HOST_CSR0	Control Status Register for Endpoint 0 in Host mode
0x01C6 4508	COUNT0	Number of Received Bytes in Endpoint 0 FIFO
0x01C6 450A	HOST_TYPE0	Defines the Speed of Endpoint 0
0x01C6 450B	HOST_NAKLIMIT0	Sets the NAK response timeout on Endpoint 0.
0x01C6 450F	CONFIGDATA	Returns details of core configuration
Control and Status Register for Endpoint 1 - EOCSR1		
0x01C6 4510	TXMAXP	Maximum Packet size for Peripheral/Host TX Endpoint
0x01C6 4512	PERI_TXCSR	Control Status Register for Peripheral TX Endpoint
	HOST_TXCSR	Control Status Register for Host TX Endpoint
0x01C6 4514	RXMAXP	Maximum Packet Size for Peripheral/Host RX Endpoint
0x01C6 4516	PERI_RXCSR	Control Status Register for Peripheral RX Endpoint
	HOST_RXCSR	Control Status Register for Host RX Endpoint
0x01C6 4518	RXCOUNT	Number of Bytes in Host RX Endpoint FIFO
0x01C6 451A	HOST_TXTYPE	Sets the operating speed, transaction protocol and peripheral endpoint number for the host TX endpoint.
0x01C6 451B	HOST_TXINTERVAL	Sets the polling interval for Interrupt/ISOC transactions or the NAK response timeout on Bulk transactions for host TX endpoint.
0x01C6 451C	HOST_RXTYPE	Sets the operating speed, transaction protocol and peripheral endpoint number for the host RX endpoint.
0x01C6 451D	HOST_RXINTERVAL	Sets the polling interval for Interrupt/ISOC transactions or the NAK response timeout on Bulk transactions for host RX endpoint.
Control and Status Register for Endpoint 2 - EOCSR2		
0x01C6 4520	TXMAXP	Maximum Packet Size for Peripheral/Host TX Endpoint
0x01C6 4522	PERI_TXCSR	Control Status Register for Peripheral TX Endpoint
	HOST_TXCSR	Control Status Register for Host TX Endpoint
0x01C6 4524	RXMAXP	Maximum Packet Size for Peripheral/Host RX Endpoint
0x01C6 4526	PERI_RXCSR	Control Status Register for Peripheral RX Endpoint
	HOST_RXCSR	Control Status Register for Host RX Endpoint
0x01C6 4528	RXCOUNT	Number of Bytes in Host RX Endpoint FIFO
0x01C6 452A	HOST_TXTYPE	Sets the operating speed, transaction protocol and peripheral endpoint number for the host TX endpoint.
0x01C6 452B	HOST_TXINTERVAL	Sets the polling interval for Interrupt/ISOC transactions or the NAK response timeout on Bulk transactions for host TX endpoint.
0x01C6 452C	HOST_RXTYPE	Sets the operating speed, transaction protocol and peripheral endpoint number for the host RX endpoint.
0x01C6 452D	HOST_RXINTERVAL	Sets the polling interval for Interrupt/ISOC transactions or the NAK response timeout on Bulk transactions for host RX endpoint.
Control and Status Register for Endpoint 3 - EOCSR3		
0x01C6 4530	TXMAXP	Maximum Packet Size for Peripheral/Host TX Endpoint
0x01C6 4532	PERI_TXCSR	Control Status Register for Peripheral TX Endpoint
	HOST_TXCSR	Control Status Register for Host TX Endpoint
0x01C6 4534	RXMAXP	Maximum Packet Size for Peripheral/Host RX Endpoint
0x01C6 4536	PERI_RXCSR	Control Status Register for Peripheral RX Endpoint
	HOST_RXCSR	Control Status Register for Host RX Endpoint
0x01C6 4538	RXCOUNT	Number of Bytes in Host RX Endpoint FIFO

Copyright © 2007–2012, Texas Instruments Incorporated

Table 7-87. USB2.0 Registers (continued)

HEX ADDRESS RANGE	ACRONYM	REGISTER NAME
0x01C6 453A	HOST_TXTYPE	Sets the operating speed, transaction protocol and peripheral endpoint number for the host TX endpoint.
0x01C6 453B	HOST_TXINTERVAL	Sets the polling interval for Interrupt/ISOC transactions or the NAK response timeout on Bulk transactions for host TX endpoint.
0x01C6 453C	HOST_RXTYPE	Sets the operating speed, transaction protocol and peripheral endpoint number for the host RX endpoint.
0x01C6 453D	HOST_RXINTERVAL	Sets the polling interval for Interrupt/ISOC transactions or the NAK response timeout on Bulk transactions for host RX endpoint.
Control and Status Register for Endpoint 4 - EOCSR4		
0x01C6 4540	TXMAXP	Maximum Packet Size for Peripheral/Host TX Endpoint
0x01C6 4542	PERI_TXCSR	Control Status Register for Peripheral TX Endpoint
	HOST_TXCSR	Control Status Register for Host TX Endpoint
0x01C6 4544	RXMAXP	Maximum Packet Size for Peripheral/Host RX Endpoint
0x01C6 4546	PERI_RXCSR	Control Status Register for Peripheral RX Endpoint
	HOST_RXCSR	Control Status Register for Host RX Endpoint
0x01C6 4548	RXCOUNT	Number of Bytes in Host RX Endpoint FIFO
0x01C6 454A	HOST_TXTYPE	Sets the operating speed, transaction protocol and peripheral endpoint number for the host TX endpoint.
0x01C6 454B	HOST_TXINTERVAL	Sets the polling interval for Interrupt/ISOC transactions or the NAK response timeout on Bulk transactions for host TX endpoint.
0x01C6 454C	HOST_RXTYPE	Sets the operating speed, transaction protocol and peripheral endpoint number for the host RX endpoint.
0x01C6 454D	HOST_RXINTERVAL	Sets the polling interval for Interrupt/ISOC transactions or the NAK response timeout on Bulk transactions for host RX endpoint.

Copyright © 2007–2012, Texas Instruments Incorporated

7.19.4 USB2.0 Electrical Data/Timing

Table 7-88. Switching Characteristics Over Recommended Operating Conditions for USB2.0 (see Figure 7-63)

NO.	PARAMETER		-594, -729						UNIT
			LOW SPEED 1.5 Mbps		FULL SPEED 12 Mbps		HIGH SPEED 480 Mbps		
			MIN	MAX	MIN	MAX	MIN	MAX	
1	$t_{r(D)}$	Rise time, USB_DP and USB_DN signals(1)	75	300	4	20	0.5		ns
2	$t_{f(D)}$	Fall time, USB_DP and USB_DN signals(1)	75	300	4	20	0.5		ns
3	t_{rfM}	Rise/Fall time, matching(2)	80	125	90	111.11	–	–	%
4	V_{CRS}	Output signal cross-over voltage(1)	1.3	2	1.3	2	–	–	V
5	$t_{jr(source)NT}$	Source (Host) Driver jitter, next transition		2		2		(3)	ns
	$t_{jr(FUNC)NT}$	Function Driver jitter, next transition		25		2		(3)	ns
6	$t_{jr(source)PT}$	Source (Host) Driver jitter, paired transition(4)		1		1		(3)	ns
	$t_{jr(FUNC)PT}$	Function Driver jitter, paired transition		10		1		(3)	ns
7	$t_{w(EOPT)}$	Pulse duration, EOP transmitter	1250	1500	160	175	–	–	ns
8	$t_{w(EOPR)}$	Pulse duration, EOP receiver	670		82		–		ns
9	$t_{(DRATE)}$	Data Rate		1.5		12		480	Mb/s
10	Z_{DRV}	Driver Output Resistance	–	–	28	49.5	40.5	49.5	Ω
11	USB_R1	USB reference resistor	9.9	10.1	9.9	10.1	9.9	10.1	kΩ

(1) Low Speed: C_L = 200 pF, Full Speed: C_L = 50 pF, High Speed: C_L = 50 pF
(2) $t_{RFM} = (t_r/t_f) \times 100$. [Excluding the first transaction from the Idle state.]
(3) For more detailed information, see the Universal Serial Bus Specification Revision 2.0, Chapter 7. Electrical.
(4) $t_{jr} = t_{px(1)} - t_{px(0)}$

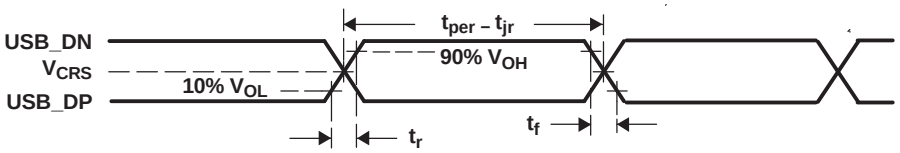

Figure 7-63. USB2.0 Integrated Transceiver Interface Timing

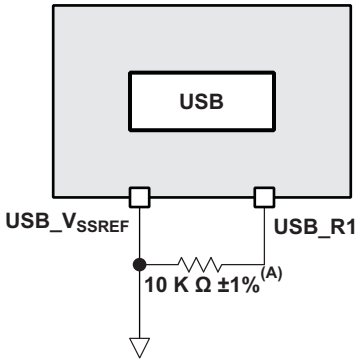

A. Place the 10 K Ω ± 1% as close to the device as possible.

Figure 7-64. USB Reference Resistor Routing

Copyright © 2007–2012, Texas Instruments Incorporated

7.20 ATA Controller

The ATA peripheral supports the following features:

- PIO, multiword DMA, and Ultra ATA 33/66/100
- Up to mode 4 timings on PIO mode
- Up to mode 2 timings on multiword DMA
- Up to mode 5 timings on Ultra ATA
- Programmable timing parameters
- Supports TrueIDE mode for Compact Flash

7.20.1 ATA Bus Master Memory Map

The ATA Controller supports multiword DMA transfers between external IDE/ATAPI devices and a system memory bus interface. Table 7-89 shows the memory map for the ATA DMA engine.

Table 7-89. ATA DMA Master Memory Map

START ADDRESS	END ADDRESS	SIZE (BYTES)	ATA DMA ACCESS
0x0000 0000	0x0FFF FFFF	256M	Reserved
0x1000 0000	0x1000 FFFF	64K	Reserved
0x1001 0000	0x1001 3FFF	16K	ARM RAM 0 (Data)
0x1001 4000	0x1001 7FFF	16K	ARM RAM 1 (Data)
0x1001 8000	0x1001 FFFF	32K	ARM ROM (Data)
0x1002 0000	0x10FF FFFF	16256K	Reserved
0x1100 0000	0x113F FFFF	4M	
0x1140 0000	0x114F FFFF	1M	
0x1150 0000	0x115F FFFF	1M	
0x1160 0000	0x116F FFFF	1M	
0x1170 0000	0x117F FFFF	1M	
0x1180 0000	0x1180 FFFF	64K	
0x1181 0000	0x1181 7FFF	32K	
0x1181 8000	0x1183 7FFF	128K	C64x+ L2 RAM/Cache
0x1183 8000	0x118F FFFF	800K	Reserved
0x1190 0000	0x11DF FFFF	5M	
0x11E0 0000	0x11E0 7FFF	32K	C64x+ L1P RAM/Cache
0x11E0 8000	0x11EF FFFF	992K	Reserved
0x11F0 0000	0x11F0 7FFF	32K	C64x+ L1D RAM/Cache
0x11F0 8000	0x11FF FFFF	992K	Reserved
0x1200 0000	0x4BFF FFFF	928M	
0x4C00 0000	0x4FFF FFFF	64M	VLYNQ (Remote Data)
0x5000 0000	0x7FFF FFFF	768M	Reserved
0x8000 0000	0x9FFF FFFF	512M	DDR2 Memory Controller
0xA000 0000	0xBFFF FFFF	512M	Reserved
0xC000 0000	0xFFFF FFFF	1G	Reserved

Copyright © 2007–2012, Texas Instruments Incorporated

7.20.2 ATA Peripheral Register Description(s)

Table 7-90 shows the ATA registers.

Table 7-90. ATA Register Memory Map

HEX ADDRESS RANGE	ACRONYM	REGISTER NAME
ATA Bus Master Interface DMA Engine Registers		
0x01C6 6000	BMICP	Primary IDE Channel DMA Control Register
0x01C6 6002	BMISP	Primary IDE Channel DMA Status Register
0x01C6 6004	BMIDTP	Primary IDE Channel DMA Descriptor Table Pointer Register
0x01C6 6008 - 0x01C6 603F	–	Reserved
ATA Configuration Registers		
0x01C6 6040	IDETIMP	Primary IDE Channel Timing Register
0x01C6 6042 - 0x01C6 6046	–	Reserved
0x01C6 6047	IDESTAT	IDE Controller Status Register
0x01C6 6048	UDMACTL	Ultra-DMA Control Register
0x01C6 604A	–	Reserved
0x01C6 6050	MISCCTL	Miscellaneous Control Register
0x01C6 6054	REGSTB	Task File Register Strobe Timing Register
0x01C6 6058	REGRCVR	Task File Register Recovery Timing Register
0x01C6 605C	DATSTB	Data Register Access PIO Strobe Timing Register
0x01C6 6060	DATRCVR	Data Register Access PIO Recovery Timing Register
0x01C6 6064	DMASTB	Multiword DMA Strobe Timing Register
0x01C6 6068	DMARCVR	Multiword DMA Recovery Timing Register
0x01C6 606C	UDMASTB	Ultra-DMA Strobe Timing Register
0x01C6 6070	UDMATRP	Ultra-DMA Ready-to-Pause Timing Register
0x01C6 6074	UDMATENV	Ultra-DMA Timing Envelope Register
0x01C6 6078	IORDYTMP	Primary I/O Ready Timer Configuration Register
0x01C6 607C - 0x01C6 67FF	–	Reserved

Copyright © 2007–2012, Texas Instruments Incorporated

7.20.3 ATA Electrical Data/Timing

All ATA AC timing data described in Section 7.20.3.1 – Section 7.20.3.3 is provided at the DM6467 device pins. For more details, see Section 7.1, *Parameter Information*.

The AC timing specifications described in Section 7.20.3.1 – Section 7.20.3.3 assume correct configuration of the ATA memory-mapped control registers for the selected ATA frequency of operation.

7.20.3.1 ATA PIO Data Transfer AC Timing

Table 7-91. Timings for ATA Module — PIO Data Transfer(1) (2) (see Figure 7-65)

NO.			-594, -729			UNIT
			MODE	MIN	MAX	
1	t_0	Cycle time	0-4(3)	(DATSTB + DATRCVR + 2)P -0.5		ns
2	t_1	Address valid to $\overline{\text{DIOW}}$/$\overline{\text{DIOR}}$ setup	0-4(3)	12P - 1.6		ns
3	t_2	$\overline{\text{DIOW}}$/$\overline{\text{DIOR}}$ pulse duration low	0-4(3)	(DATSTB + 1)P - 1		ns
4	t_{2i}	$\overline{\text{DIOW}}$/$\overline{\text{DIOR}}$ recovery time, pulse duration high	0-2	–		ns
			3-4(3)	(DATRCVR + 1)P - 1		ns
5	t_3	$\overline{\text{DIOW}}$ data setup time, DD[15:0] valid before $\overline{\text{DIOW}}$ rising edge	0-4(3)	(DATSTB + 1)P		ns
6	t_4	$\overline{\text{DIOW}}$ data hold time, DD[15:0] valid after $\overline{\text{DIOW}}$ rising edge	0-4(3)	(HWNHLD + 1)P + 1		ns
7	t_5	$\overline{\text{DIOR}}$ data setup time, DD[15:0] valid before $\overline{\text{DIOR}}$ rising edge	0	50		ns
			1	35		ns
			2-4(3)	20		ns
8	t_6	$\overline{\text{DIOR}}$ data hold time, DD[15:0] valid after $\overline{\text{DIOR}}$ rising edge	0-4(3)	5		ns
9	t_{6Z}	Output data 3-state, DD[15:0] 3-state after $\overline{\text{DIOR}}$ rising edge	0-4(3)		30	ns
10	t_9	$\overline{\text{DIOW}}$/$\overline{\text{DIOR}}$ to address valid hold	0-4(3)	(HWNHLD + 1)P - 2.1		ns
11	t_{RD}	Read data setup time, DD[15:0] valid before IORDY active	0-4(3)	0		ns
12	t_A	IORDY setup	0-4(3) (4)		35	ns
13	t_B	IORDY pulse width	0-4(3)		1250	ns
14	t_C	IORDY assertion to release	0-4(3)		5	ns

(1) P = SYSCLK4 period, in ns, for ATA. For example, when running the DSP CPU at 594 MHz, use P = 10.1 nsand when running the DSP CPU at 729 MHz, use P = 9.6 ns.

(2) DATSTB equals the value programmed in the DATSTBxP bit field in the DATSTB register. DATRCVR equals the value programmed in the DATRCVRxP bit field in the DATRCVR register. HWNHLD equals the value programmed in the HWNHLDxP bit field in the MISCCTL register. For more detailed information, see the *TMS320DM646x DMSoC ATA Controller User's Guide* (literature number SPRUEQ3).

(3) The sustained throughput for PIO modes 3 and 4 is limited to the throughput equivalent of PIO mode 2. For more detailed information, see the *TMS320DM646x DMSoC ATA Controller User's Guide* (literature number SPRUEQ3).

(4) The t_A parameter must be met only when the IORDY timer is enabled to allow a device to insert wait states during a transaction. In order to meet the t_A parameter, a minimum frequency for SYSCLK4 is specified for each PIO as follows:
- PIO mode 0, MIN frequency = 15 MHz
- PIO mode 1, MIN frequency = 22 MHz
- PIO mode 2, MIN frequency = 31 MHz
- PIO mode 3, MIN frequency = 45 MHz
- PIO mode 4, MIN frequency = 57 MHz

Copyright © 2007–2012, Texas Instruments Incorporated

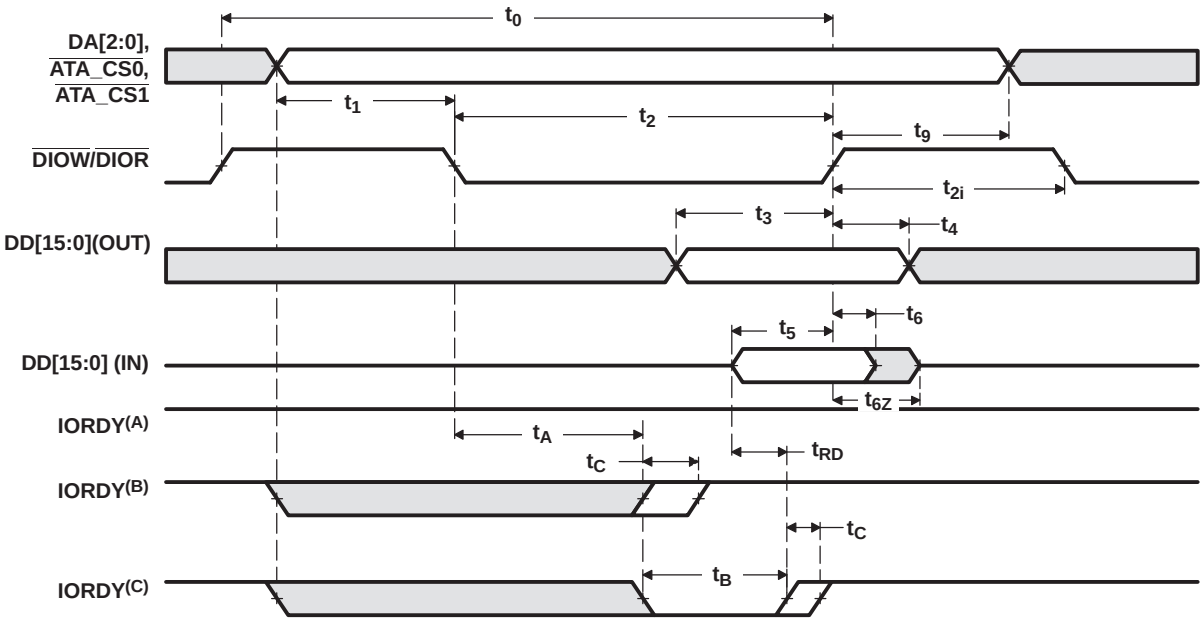

A. IORDY is not negated for transfer (no wait generated)
B. IORDY is negative but is re-asserted before t_A (no wait is generated)
C. IORDY is negative before t_A and remains asserted until t_B; data is driven valid at t_{RD} (wait is generated)

Figure 7-65. ATA PIO Data Transfer Timing

Copyright © 2007–2012, Texas Instruments Incorporated

7.20.3.2 ATA Multiword DMA Timing

Table 7-92. Timings for ATA Module — Multiword DMA AC Timing(1) (2) (see Figure 7-66)

NO.			-594, -729			UNIT
			MODE	MIN	MAX	
1	t_0	Cycle time	0-2	(DMASTB + DMARCVR + 2)P - 0.5		ns
2	t_D	$\overline{DIOW}$/$\overline{DIOR}$ active low pulse duration	0-2	(DMASTB + 1)P - 1		ns
3	t_E	$\overline{DIOR}$ data access, $\overline{DIOR}$ falling edge to DD[15:0] valid	0		150	ns
			1		60	ns
			2		50	ns
4	t_F	$\overline{DIOR}$ data hold time, DD[15:0] valid after $\overline{DIOR}$ rising edge	0-2	5		ns
5	t_G	$\overline{DIOW}$/$\overline{DIOR}$ data setup time, DD[15:0] (**OUT**) valid before $\overline{DIOW}$/$\overline{DIOR}$ rising edge	0-2	(DMASTB)P		ns
		$\overline{DIOW}$/$\overline{DIOR}$ data setup time, DD[15:0] (**IN**) valid before $\overline{DIOW}$/$\overline{DIOR}$ rising edge	0	100		ns
			1	30		ns
			2	20		ns
6	t_H	$\overline{DIOW}$ data hold time, DD[15:0] valid after $\overline{DIOW}$ rising edge	0-2	(HWNHLD + 1)P + 1		ns
7	t_I	$\overline{DMACK}$ to $\overline{DIOW}$/$\overline{DIOR}$ setup	0-2	(DMARCVR + 1)P - 1.7		ns
8	t_J	$\overline{DIOW}$/$\overline{DIOR}$ to $\overline{DMACK}$ hold	0-2	5P - 5.9		ns
9	t_{KR}	$\overline{DIOR}$ negated pulse width	0-2	(DMARCVR + 1)P - 1		ns
10	t_{KW}	$\overline{DIOW}$ negated pulse width	0-2	(DMARCVR + 1)P - 1		ns
11	t_{LR}	$\overline{DIOR}$ to DMARQ delay	0		120	ns
			1		45	ns
			2		35	ns
12	t_{LW}	$\overline{DIOW}$ to DMARQ delay	0-1		40	ns
			2		35	ns
13	t_M	$\overline{ATA_CSx}$ valid to $\overline{DIOW}$/$\overline{DIOR}$ setup	0-2	(DATRCVR)P - 1.7		ns
14	t_N	$\overline{ATA_CSx}$ valid after $\overline{DIOW}$/$\overline{DIOR}$ rising edge hold	0-2	5P - 1.7		ns
15	t_Z	$\overline{DMACK}$ to read data (DD[15:0]) released	0		20	ns
			1-2		25	ns

(1) P = SYSCLK4 period, in ns, for ATA. For example, when running the DSP CPU at 594 MHz, use P = 10.1 nsand when running the DSP CPU at 729 MHz, use P = 9.6 ns

(2) DMASTB equals the value programmed in the DMASTBxP bit field in the DMASTB register. DMARCVR equals the value programmed in the DMARCVRxP bit field in the DMARCVR register. HWNHLD equals the value programmed in the HWNHLDxP bit field in the MISCCTL register. For more detailed information, see the *TMS320DM646x DMSoC ATA Controller User's Guide* (literature number SPRUEQ3).

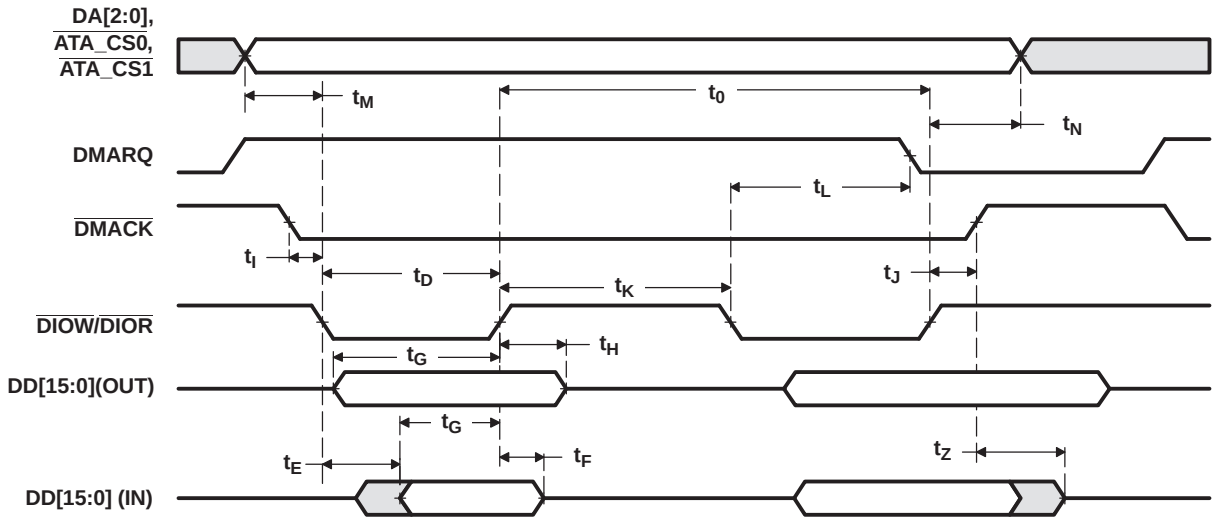

Figure 7-66. ATA Multiword DMA Timing

Copyright © 2007–2012, Texas Instruments Incorporated

7.20.3.3 ATA Ultra DMA Timing

Table 7-93. Timings for ATA Module — Ultra DMA AC Timing(1) (2) (see Figure 7-67 through Figure 7-76)

NO.			-594, -729			UNIT
			MODE	MIN	MAX	
28	$f_{(SYSCLK4)}$	Operating frequency, SYSCLK4	0-5	25		MHz
1	$t_{2CYCTYP}$	Typical sustained average two cycle time	0	240		ns
			1	160		ns
			2	120		ns
			3	90		ns
			4	60		ns
			5	40		ns
2	t_{CYC}	Cycle time, Strobe edge to Strobe edge	0-5	(UDMASTB + 1)P		ns
3	t_{2CYC}	Two cycle time, rising to rising edge or falling to falling edge	0-5	2(UDMASTB + 1)P		ns
4	t_{DS}	Data setup, data valid before STROBE edge	0	15		ns
			1	10		ns
			2-3	7		ns
			4	5		ns
			5	4		ns
5	t_{DH}	Data hold, data valid after STROBE edge	0-4	5		ns
			5	4.6		ns
6	t_{DVS}	Data valid **INPUT** setup time, data valid before STROBE	0	70		ns
			1	48		ns
			2	31		ns
			3	20		ns
			4	6.7		ns
			5	4.8		ns
		Data valid **OUTPUT** setup time, data valid before STROBE	0-5	(UDMASTB)P - 3.1		ns
7	t_{DVH}	Data valid **INPUT** hold time, data valid after STROBE	0-4	6.2		ns
			5	4.8		ns
		Data valid **OUTPUT** hold time, data valid after STROBE	0-5	1P - 2		ns
10	t_{CVS}	CRC word valid setup time at host, CRC valid before $\overline{DMACK}$ negation	0-5	P		ns
11	t_{CVH}	CRC word valid hold time at sender, CRC valid after $\overline{DMACK}$ negation	0-5	2P		ns
12	t_{ZFS}	Time from STROBE output released-to-driving until the first transition of critical timing	0-4	0		ns
			5	35		ns
13	t_{DZFS}	Time from data output released-to-driving until the first transition of critical timing	0	70		ns
			1	48		ns
			2	31		ns
			3	20		ns
			4	6.7		ns
			5	25		ns

(1) P = SYSCLK4 period, in ns, for ATA. For example, when running the DSP CPU at 594 MHz, use P = 10.1 ns and when running the DSP CPU at 729 MHz, use P = 9.6 ns

(2) UDMASTB equals the value programmed in the UDMSTBxP bit field in the UDMASTB register. UDMATRP equals the value programmed in the UDMTRPxP bit field in the UDMATRP register. TENV equals the value programmed in the UDMATNVxP bit field in the UDMATENV register. For more detailed information, see the *TMS320DM646x DMSoC ATA Controller User's Guide* (literature number SPRUEQ3).

Copyright © 2007–2012, Texas Instruments Incorporated

Table 7-93. Timings for ATA Module — Ultra DMA AC Timing[1] [2] (see Figure 7-67 through Figure 7-76) (continued)

NO.			-594, -729			UNIT
			MODE	MIN	MAX	
14	t_{FS}	First STROBE time	0		230	ns
			1		200	ns
			2		170	ns
			3		130	ns
			4		120	ns
			5		90	ns
15	t_{LI}	Limited interlock time	0-2	0	150	ns
			3-4	0	100	ns
			5	0	75	ns
16	t_{MLI}	Interlock time with minimum	0-5	20		ns
17	t_{UI}	Unlimited interlock time	0-5	0		ns
18	t_{AZ}	Maximum time allowed for output drivers to release	0-5		10	ns
19	t_{ZAH}	Minimum delay time required for output	0-5	20		ns
20	t_{ZAD}	Minimum delay time for driver to assert or negate (from released)	0-5	0		ns
21	t_{ENV}	Envelope time, $\overline{\text{DMACK}}$ to STOP and $\overline{\text{DMACK}}$ to HDMARDY during in-burst initiation and from $\overline{\text{DMACK}}$ to STOP during data out burst initiation	0-5	(TENV + 1)P - 0.5	(TENV + 1)P + 1.4	ns
22	t_{RFS}	Ready-to-final-STROBE time	0		75	ns
			1		70	ns
			2-4		60	ns
			5		50	ns
23	t_{RP}	Ready to pause time, **(HDMARDY ($\overline{\text{DIOR}}$) to STOP ($\overline{\text{DIOW}}$))**	0-5	(UDMATRP + 1)P - 0.8		ns
		Ready to pause time, **(DDMARDY (IORDY) to DMARQ)**	0	160		ns
			1	125		ns
			2-4	100		ns
			5	85		ns
24	t_{IORDYZ}	Maximum time before releasing IORDY	0-5		20	ns
25	t_{ZIORDY}	Minimum time before driving IORDY	0-5	0		ns
26	t_{ACK}	Setup and hold time for $\overline{\text{DMACK}}$ (before assertion or negation)	0-5	20		ns
27	t_{SS}	STROBE edge to negation of DMARQ or assertion of STOP (when sender terminates a burst)	0-5	50		ns

Copyright © 2007–2012, Texas Instruments Incorporated

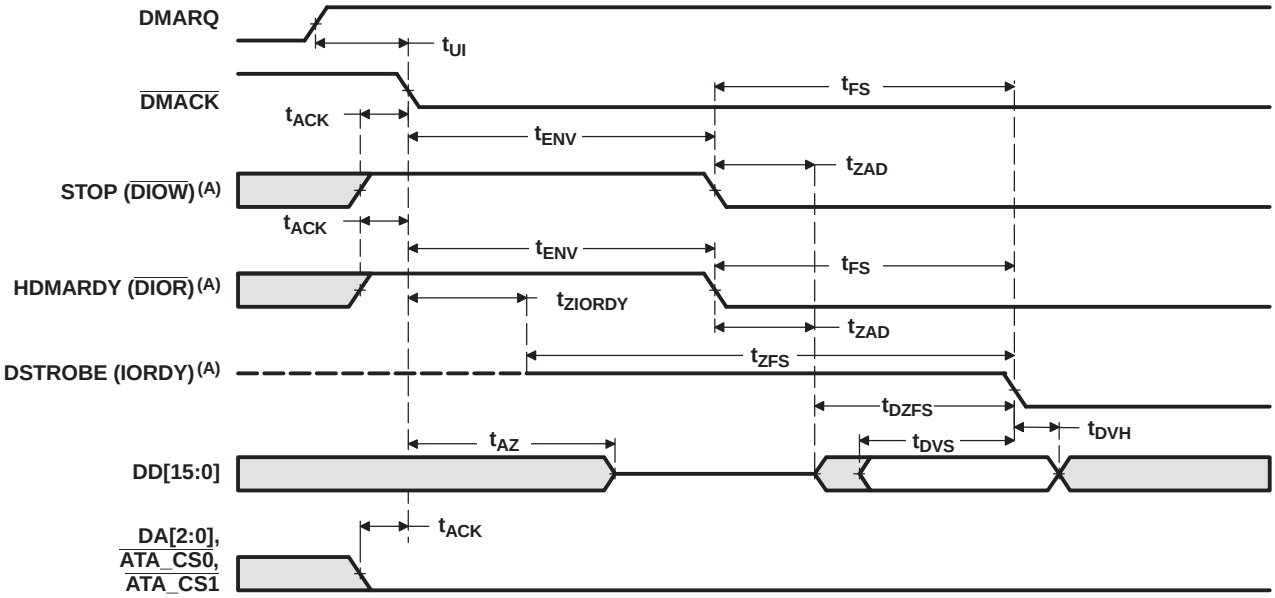

A. The definitions for the DIOW:STOP, DIOR:HDMARDY, and IORDY:DSTROBE signal lines are not in effect until DMARQ and DMACK are asserted.

Figure 7-67. ATA Initiating an Ultra DMA Data-In Burst Timing

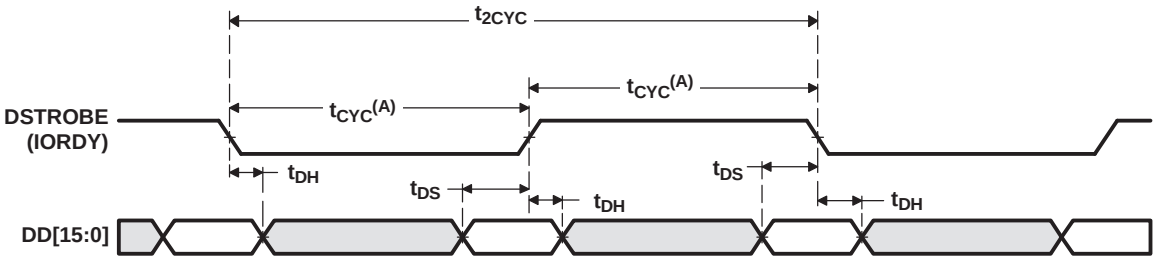

A. While DSTROBE (IORDY) timing is t_{CYC} at the device, it may be different at the host due to propagation delay differences on the cable.

Figure 7-68. ATA Sustained Ultra DMA Data-In Data Transfer Timing

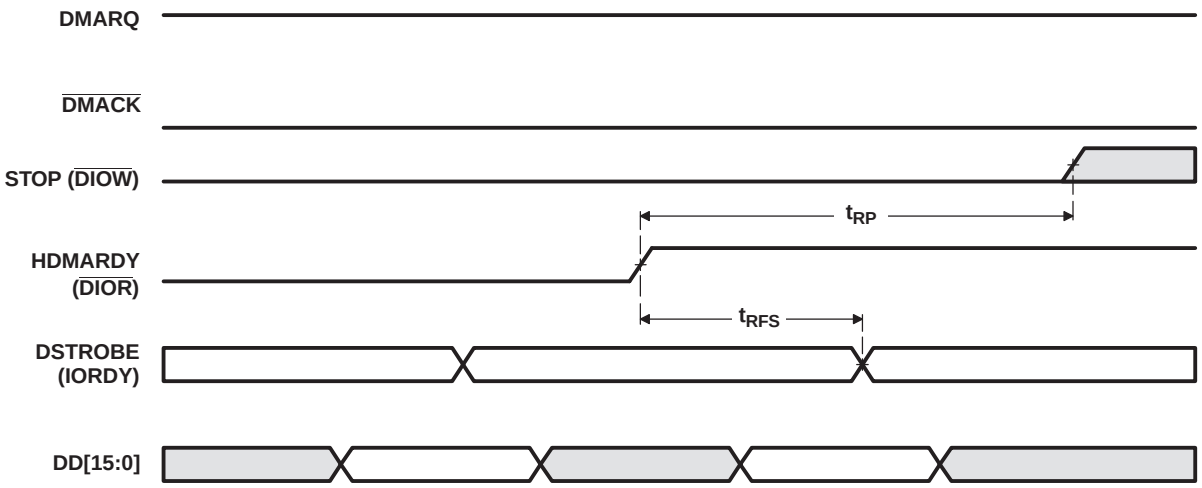

Figure 7-69. ATA Host Pausing an Ultra DMA Data-In Burst Timing

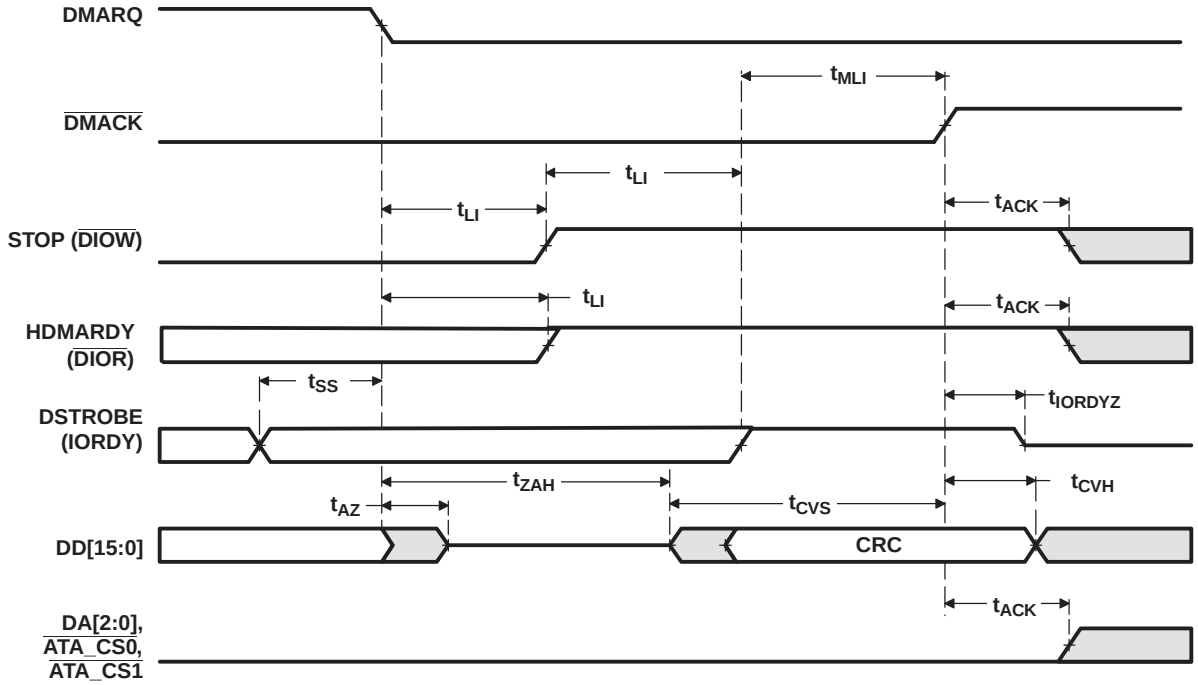

Figure 7-70. ATA Device Terminating an Ultra DMA Data-In Burst Timing

Copyright © 2007–2012, Texas Instruments Incorporated

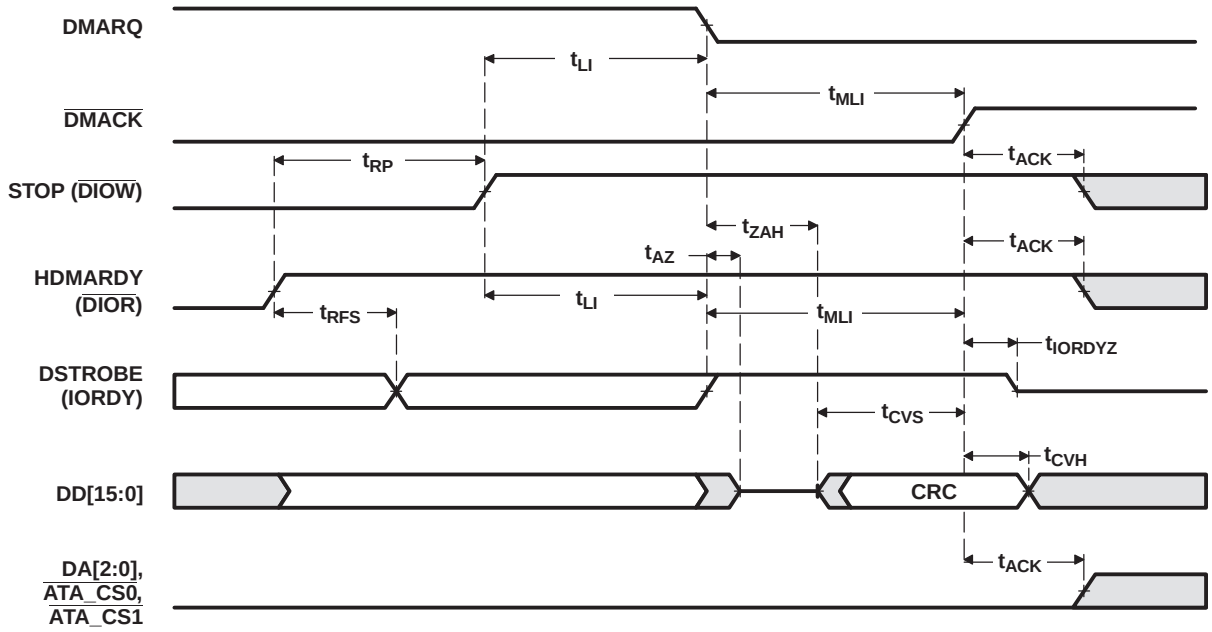

Figure 7-71. ATA Host Terminating an Ultra DMA Data-In Burst Timing

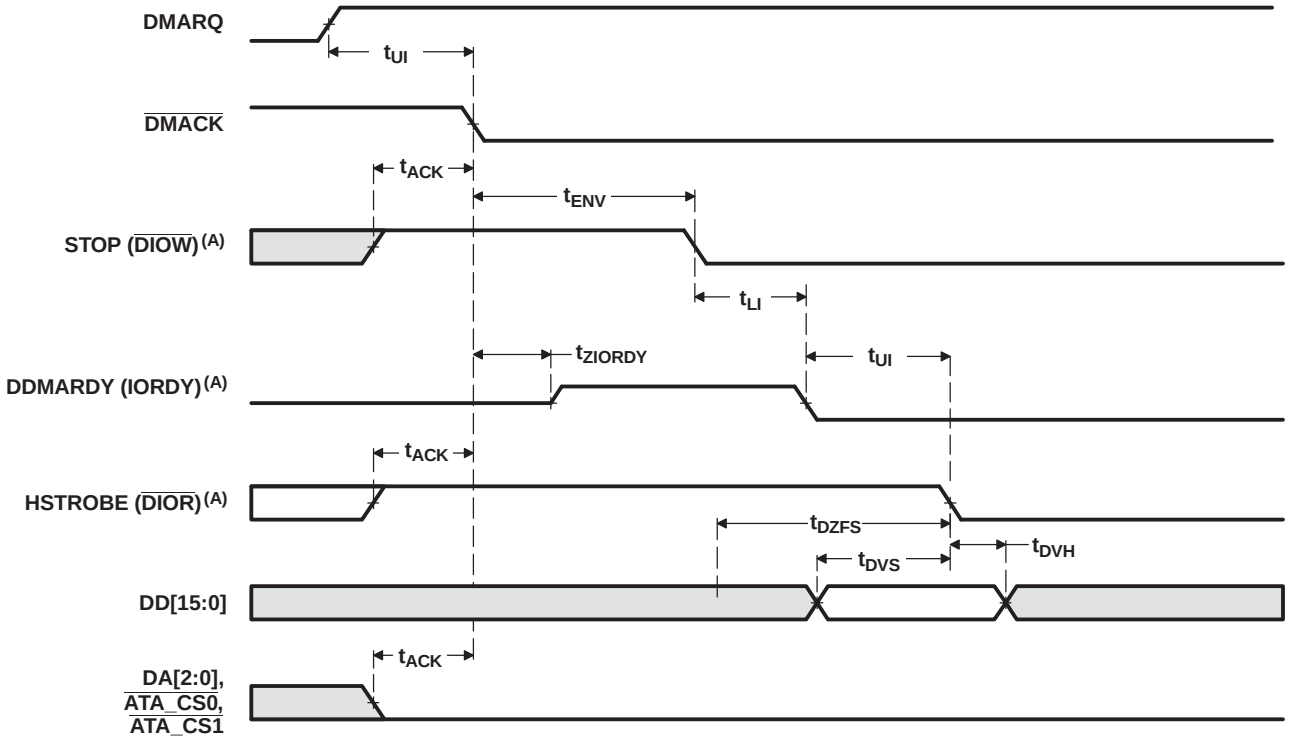

A. The definitions for the DIOW:STOP, IORDY:DDMARDY, and DIOR:HSTROBE signal lines are not in effect until DMARQ and DMACK are asserted.

Figure 7-72. ATA Initiating an Ultra DMA Data-Out Burst Timing

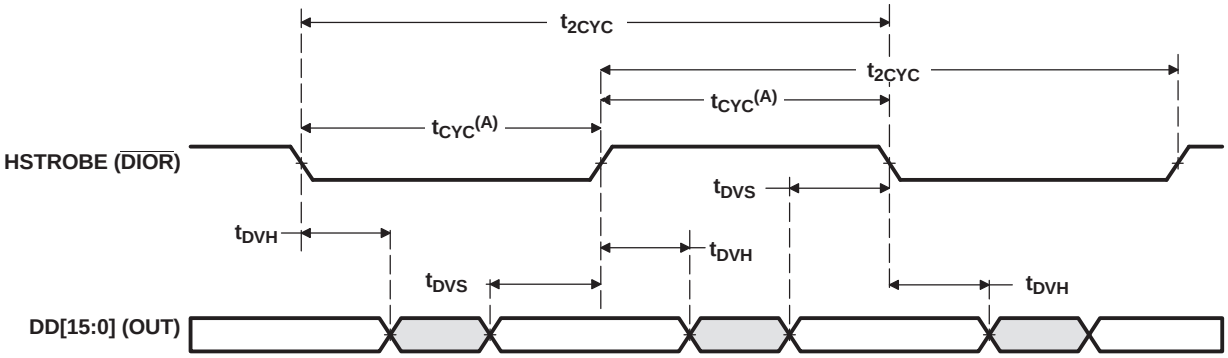

A. While HSTROBE (DIOR) timing is t_{CYC} at the host, it may be different at the device due to propagation delay differences on the cable.

Figure 7-73. ATA Sustained Ultra DMA Data-Out Transfer Timing

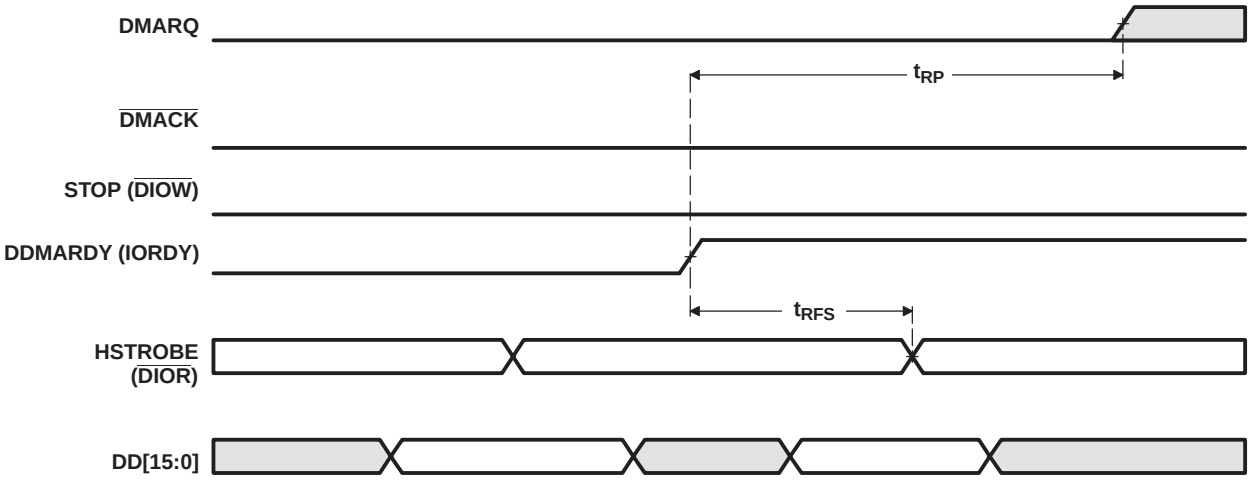

Figure 7-74. ATA Device Pausing an Ultra DMA Data-Out Burst Timing

Copyright © 2007–2012, Texas Instruments Incorporated

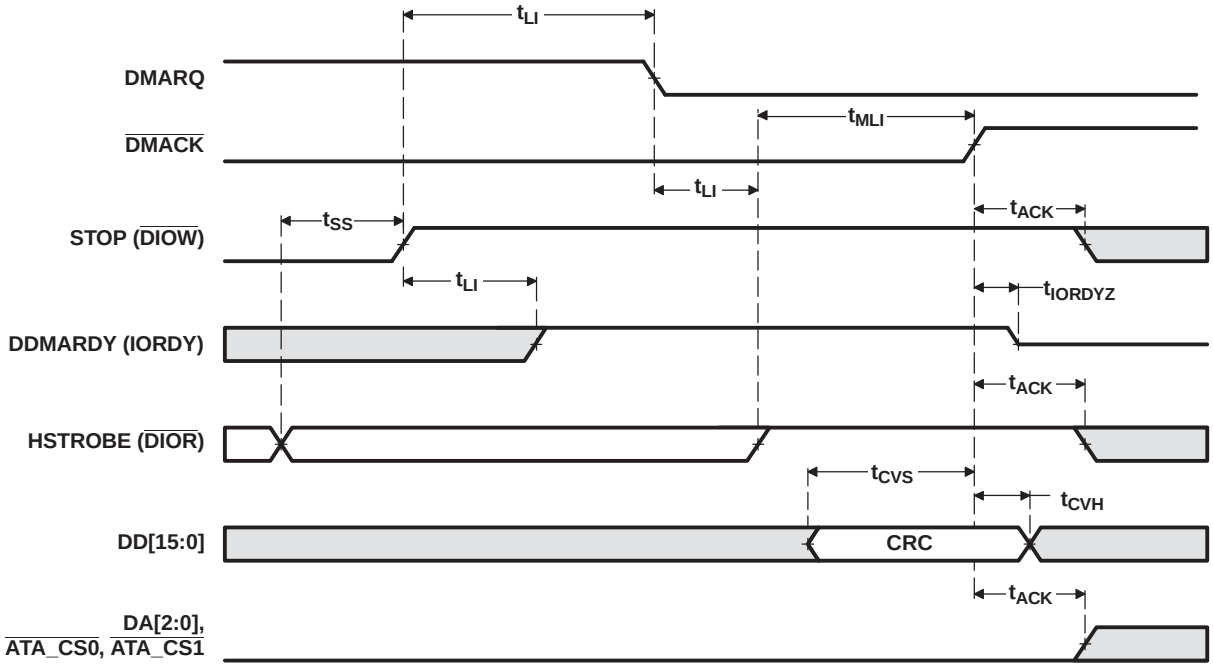

Figure 7-75. ATA Host Terminating an Ultra DMA Data-Out Burst Timing

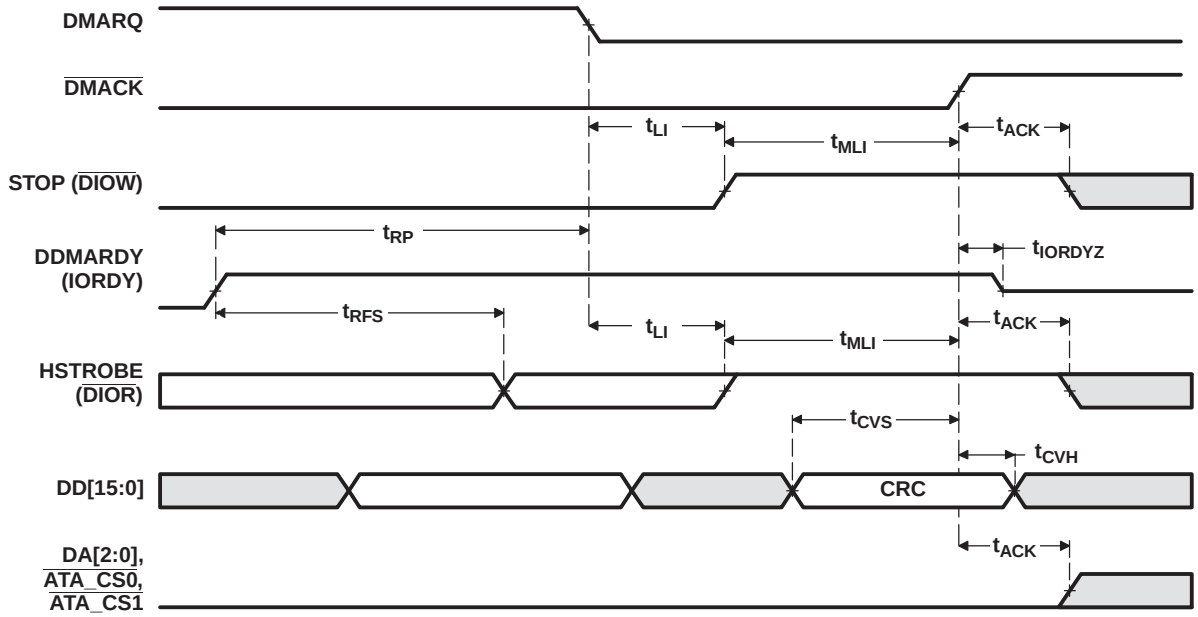

Figure 7-76. ATA Device Terminating an Ultra DMA Data-Out Burst Timing

7.20.3.4 ATA HDDIR Timing

Figure 7-77 through Figure 7-80 show the behavior of HDDIR for the different types of transfers.

Table 7-94. Timing Requirements for HDDIR(1)

NO.			-594, -729		UNIT
			MIN	MAX	
1	t_c	Cycle time, $\overline{\text{ATA_CS[1:0]}}$ to HDDIR low	E - 3.1		ns

(1) E = ATA clock cycle

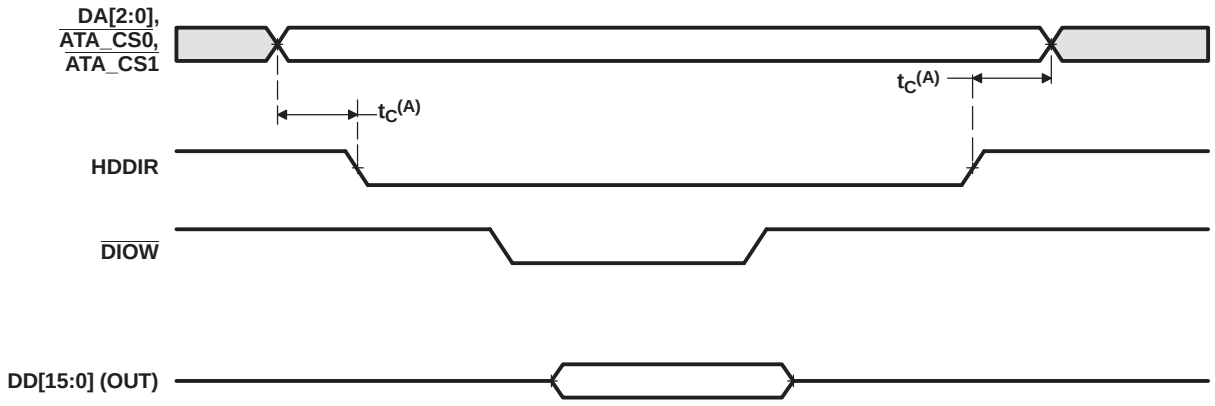

A. $t_C \geq$ one cycle

Figure 7-77. ATA HDDIR Taskfile Write/Single PIO Write Timing

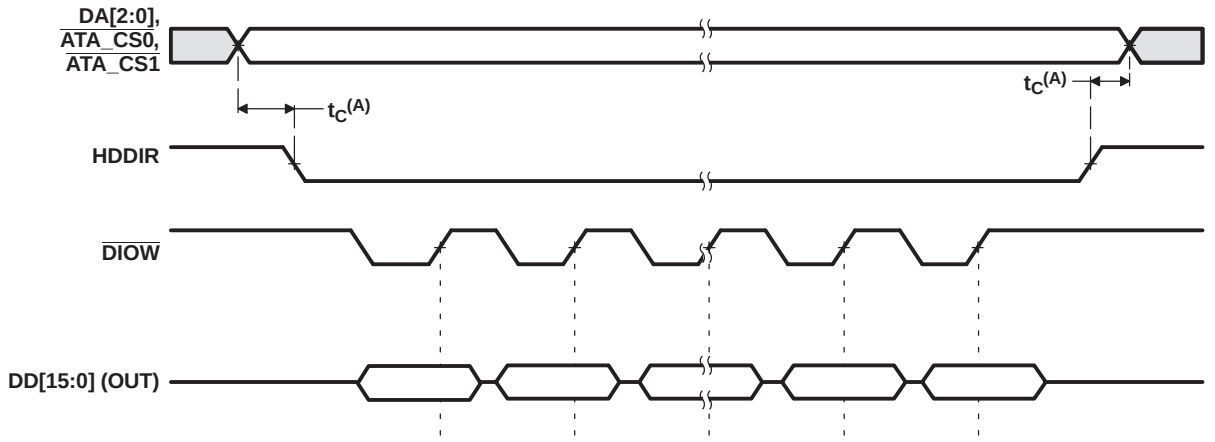

A. $t_C \geq$ one cycle

Figure 7-78. ATA HDDIR PIO Postwrite Start Timing

Copyright © 2007–2012, Texas Instruments Incorporated

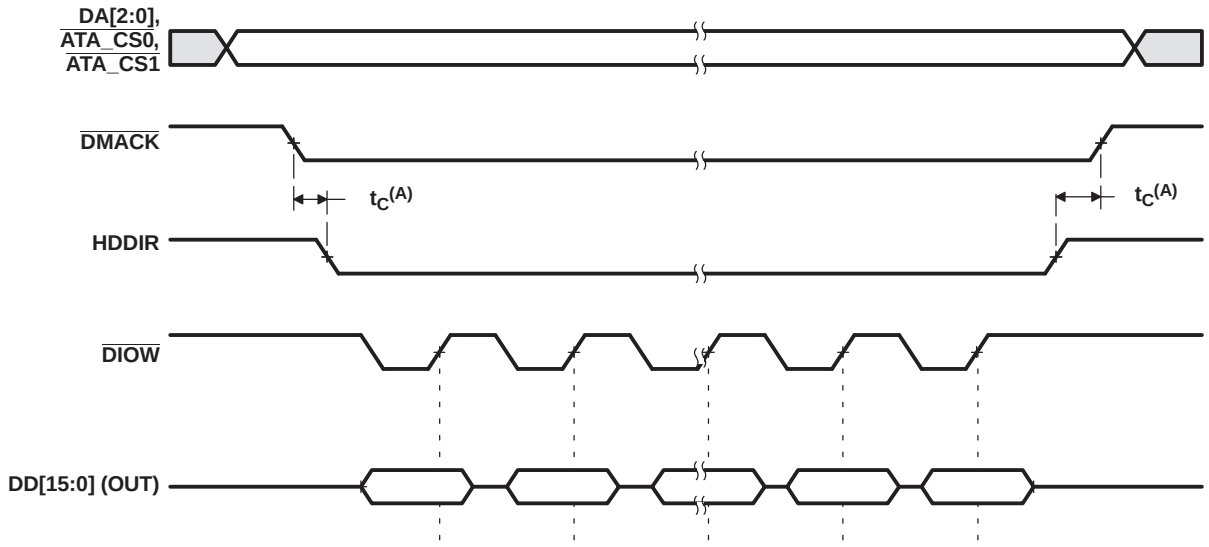

A. $t_C \geq$ one cycle

Figure 7-79. ATA HDDIR Multiword DMA Write Transfer Timing

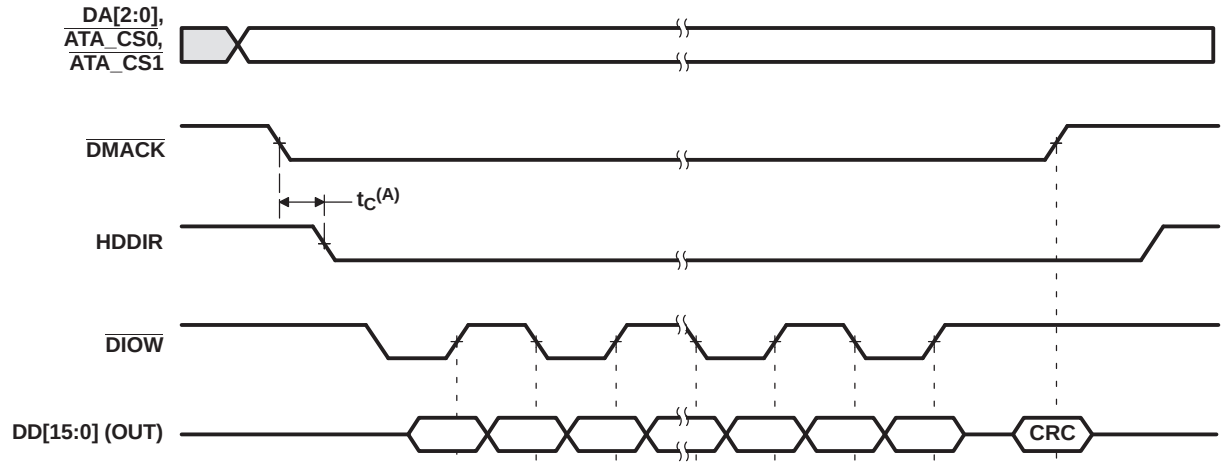

A. $t_C \geq$ one cycle

Figure 7-80. ATA HDDIR Ultra DMA Write Transfer Timing

7.21 VLYNQ

The DM6467 VLYNQ peripheral provides a high speed serial communications interface with the following features.

- Low Pin Count
- Scalable Performance/Support
- Simple Packet Based Transfer Protocol for Memory Mapped Access
  - Write Request/Data Packet
  - Read Request Packet
  - Read Response Data Packet
  - Interrupt Request Packet
- Supports both Symmetric and Asymmetric Operation
  - Tx pins on first device connect to Rx pins on second device and vice versa
  - Data pin widths are automatically detected after reset
  - Request packets, response packets, and flow control information are all multiplexed and sent across the same physical pins
  - Supports both Host/Peripheral and Peer-to-Peer communication
- Simple Block Code Packet Formatting (8-bit/10-bit)
- In Band Flow Control
  - No extra pins needed
  - Allows receiver to momentarily throttle back transmitter when overflow is about to occur
  - Uses built in special code capability of block code to seamlessly interleave flow control information with user data
  - Allows system designer to balance cost of data buffering versus performance
- Multiple outstanding transactions
- Automatic packet formatting optimizations
- Internal loop-back mode

7.21.1 VLYNQ Bus Master Memory Map

The VLYNQ peripheral includes a bus master interface that allows external device initiated transfers to access the DM6467 system bus. Table 7-95 shows the memory map for the VLYNQ master interface.

Table 7-95. VLYNQ Master Memory Map

START ADDRESS	END ADDRESS	SIZE (BYTES)	HPI ACCESS
0x0000 0000	0x01BF FFFF	28M	Reserved
0x01C0 0000	0x0FFF FFFF	228M	CFG Bus Peripherals
0x1000 0000	0x1000 FFFF	64K	Reserved
0x1001 0000	0x1001 3FFF	16K	ARM RAM 0 (Data)
0x1001 4000	0x1001 7FFF	16K	ARM RAM 1 (Data)
0x1001 8000	0x1001 FFFF	32K	ARM ROM (Data)

Copyright © 2007–2012, Texas Instruments Incorporated

Table 7-95. VLYNQ Master Memory Map (continued)

START ADDRESS	END ADDRESS	SIZE (BYTES)	HPI ACCESS
0x1002 0000	0x10FF FFFF	16256K	Reserved
0x1100 0000	0x113F FFFF	4M	
0x1140 0000	0x114F FFFF	1M	
0x1150 0000	0x115F FFFF	1M	
0x1160 0000	0x116F FFFF	1M	
0x1170 0000	0x117F FFFF	1M	
0x1180 0000	0x1180 FFFF	64K	
0x1181 0000	0x1181 7FFF	32K	
0x1181 8000	0x1183 7FFF	128K	C64x+ L2 RAM/Cache
0x1183 8000	0x118F FFFF	800K	Reserved
0x1190 0000	0x11DF FFFF	5M	
0x11E0 0000	0x11E0 7FFF	32K	C64x+ L1P RAM/Cache
0x11E0 8000	0x11EF FFFF	992K	Reserved
0x11F0 0000	0x11F0 7FFF	32K	C64x+ L1D RAM/Cache
0x11F0 8000	0x11FF FFFF	992K	Reserved
0x1200 0000	0x41FF FFFF	768M	
0x4200 0000	0x43FF FFFF	32M	EMIFA Data ($\overline{CS2}$)
0x4400 0000	0x45FF FFFF	32M	EMIFA Data ($\overline{CS3}$)
0x4600 0000	0x47FF FFFF	32M	EMIFA Data ($\overline{CS4}$)
0x4800 0000	0x49FF FFFF	32M	EMIFA Data ($\overline{CS5}$)
0x4A00 0000	0x7FFF FFFF	864M	Reserved
0x8000 0000	0x9FFF FFFF	512M	DDR2 Memory Controller
0xA000 0000	0xBFFF FFFF	512M	Reserved
0xC000 0000	0xFFFF FFFF	1G	Reserved

7.21.2 VLYNQ Peripheral Register Description(s)

Table 7-96. VLYNQ Registers

HEX ADDRESS RANGE	ACRONYM	REGISTER NAME
0x2001 0000	REVID	VLYNQ Revision Register
0x2001 0004	CTRL	VLYNQ Local Control Register
0x2001 0008	STAT	VLYNQ Local Status Register
0x2001 000C	INTPRI	VLYNQ Local Interrupt Priority Vector Status/Clear Register
0x2001 0010	INTSTATCLR	VLYNQ Local Unmasked Interrupt Status/Clear Register
0x2001 0014	INTPENDSET	VLYNQ Local Interrupt Pending/Set Register
0x2001 0018	INTPTR	VLYNQ Local Interrupt Pointer Register
0x2001 001C	XAM	VLYNQ Local Transmit Address Map Register
0x2001 0020	RAMS1	VLYNQ Local Receive Address Map Size 1 Register
0x2001 0024	RAMO1	VLYNQ Local Receive Address Map Offset 1 Register
0x2001 0028	RAMS2	VLYNQ Local Receive Address Map Size 2 Register
0x2001 002C	RAMO2	VLYNQ Local Receive Address Map Offset 2 Register
0x2001 0030	RAMS3	VLYNQ Local Receive Address Map Size 3 Register
0x2001 0034	RAMO3	VLYNQ Local Receive Address Map Offset 3 Register
0x2001 0038	RAMS4	VLYNQ Local Receive Address Map Size 4 Register
0x2001 003C	RAMO4	VLYNQ Local Receive Address Map Offset 4 Register
0x2001 0040	CHIPVER	VLYNQ Local Chip Version Register

Copyright © 2007–2012, Texas Instruments Incorporated

Table 7-96. VLYNQ Registers (continued)

HEX ADDRESS RANGE	ACRONYM	REGISTER NAME
0x2001 0044	AUTNGO	VLYNQ Local Auto Negotiation Register
0x2001 0048	–	Reserved
0x2001 004C	–	Reserved
0x2001 0050 - 0x2001 005C	–	Reserved
0x2001 0060	–	Reserved
0x2001 0064	–	Reserved
0x2001 0068 - 0x2001 007C	–	Reserved *for future use*
0x2001 0080	RREVID	VLYNQ Remote Revision Register
0x2001 0084	RCTRL	VLYNQ Remote Control Register
0x2001 0088	RSTAT	VLYNQ Remote Status Register
0x2001 008C	RINTPRI	VLYNQ Remote Interrupt Priority Vector Status/Clear Register
0x2001 0090	RINTSTATCLR	VLYNQ Remote Unmasked Interrupt Status/Clear Register
0x2001 0094	RINTPENDSET	VLYNQ Remote Interrupt Pending/Set Register
0x2001 0098	RINTPTR	VLYNQ Remote Interrupt Pointer Register
0x2001 009C	RXAM	VLYNQ Remote Transmit Address Map Register
0x2001 00A0	RRAMS1	VLYNQ Remote Receive Address Map Size 1 Register
0x2001 00A4	RRAMO1	VLYNQ Remote Receive Address Map Offset 1 Register
0x2001 00A8	RRAMS2	VLYNQ Remote Receive Address Map Size 2 Register
0x2001 00AC	RRAMO2	VLYNQ Remote Receive Address Map Offset 2 Register
0x2001 00B0	RRAMS3	VLYNQ Remote Receive Address Map Size 3 Register
0x2001 00B4	RRAMO3	VLYNQ Remote Receive Address Map Offset 3 Register
0x2001 00B8	RRAMS4	VLYNQ Remote Receive Address Map Size 4 Register
0x2001 00BC	RRAMO4	VLYNQ Remote Receive Address Map Offset 4 Register
0x2001 00C0	RCHIPVER	VLYNQ Remote Chip Version Register (values on the device_id and device_rev pins of remote VLYNQ)
0x2001 00C4	RAUTNGO	VLYNQ Remote Auto Negotiation Register
0x2001 00C8	RMANNGO	VLYNQ Remote Manual Negotiation Register
0x2001 00CC	RNGOSTAT	VLYNQ Remote Negotiation Status Register
0x2001 00D0 - 0x2001 00DC	–	Reserved
0x2001 00E0	RINTVEC0	VLYNQ Remote Interrupt Vectors 3 - 0 (sourced from vlynq_int_i[3:0] port of remote VLYNQ)
0x2001 00E4	RINTVEC1	VLYNQ Remote Interrupt Vectors 7 - 4 (sourced from vlynq_int_i[7:4] port of remote VLYNQ)
0x2001 00E8 - 0x2001 00FC	–	Reserved *for future use*
0x2001 0100 - 0x2001 0FFF	–	Reserved
VLYNQ Remote Devices		
0x4C00 0000 - 0x4FFF FFFF	VLYNQREMOTE	64 MB Remote Data Region. Translated into one of four mapped registers on the remote device.

Copyright © 2007–2012, Texas Instruments Incorporated

7.21.3 VLYNQ Electrical Data/Timing

Table 7-97. Timing Requirements for VLYNQ_CLOCK Input (see Figure 7-81)

NO.			-594		-729		UNIT
			MIN	MAX	MIN	MAX	
1	$t_{c(VCLK)}$	Cycle time, VLYNQ_CLOCK	10		9.6		ns
2	$t_{w(VCLKH)}$	Pulse duration, VLYNQ_CLOCK high	3		3		ns
3	$t_{w(VCLKL)}$	Pulse duration, VLYNQ_CLK low	3		3		ns
4	$t_{t(VCLK)}$	Transition time, VLYNQ_CLOCK		3		3	ns

Table 7-98. Switching Characteristics Over Recommended Operating Conditions for VLYNQ_CLOCK Output (see Figure 7-81)

NO.	PARAMETER		-594		-729		UNIT
			MIN	MAX	MIN	MAX	
1	$t_{c(VCLK)}$	Cycle time, VLYNQ_CLOCK	10		9.6		ns
2	$t_{w(VCLKH)}$	Pulse duration, VLYNQ_CLOCK high	4		4		ns
3	$t_{w(VCLKL)}$	Pulse duration, VLYNQ_CLOCK low	4		4		ns
4	$t_{t(VCLK)}$	Transition time, VLYNQ_CLOCK		3		3	ns

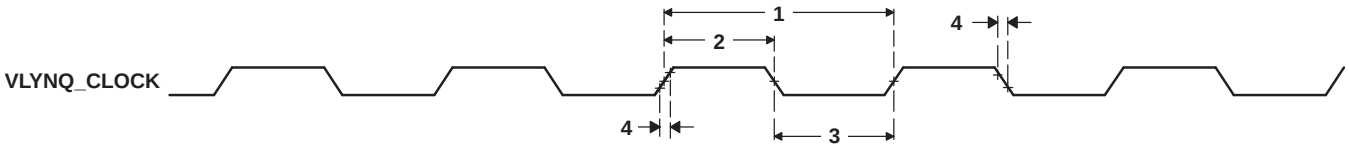

Figure 7-81. VLYNQ_CLOCK Timing for VLYNQ

Table 7-99. Switching Characteristics Over Recommended Operating Conditions for Transmit Data for the VLYNQ Module (see Figure 7-82)

NO.	PARAMETER		-594, -729				UNIT
			FAST MODE		SLOW MODE		
			MIN	MAX	MIN	MAX	
1	$t_{d(VCLKH-TXDI)}$	Delay time, VLYNQ_CLOCK high to VLYNQ_TXD[3:0] invalid	1		2.21		ns
2	$t_{d(VCLKH-TXDV)}$	Delay time, VLYNQ_CLOCK high to VLYNQ_TXD[3:0] valid		7.14		8.5	ns

Table 7-100. Timing Requirements for Receive Data for the VLYNQ Module(1) (see Figure 7-82)

NO.				-594, -729		UNIT
				MIN	MAX	
3	$t_{su(RXDV-VCLKH)}$	Setup time, VLYNQ_RXD[3:0] valid before VLYNQ_CLOCK high	RTM disabled, RTM sample = 3	0.2		ns
			RTM enabled	(1)		ns
4	$t_{h(VCLKH-RXDV)}$	Hold time, VLYNQ_RXD[3:0] valid after VLYNQ_CLOCK high	RTM disabled, RTM sample = 3	2		ns
			RTM enabled	(1)		ns

(1) The VLYNQ receive timing manager (RTM) is a serial receive logic designed to eliminate setup and hold violations that could occur in traditional input signals. RTM logic automatically selects the setup and hold timing from one of eight data flops (see Table 7-101). When RTM logic is disabled, the setup and hold timing from the default data flop (3) is used.

Table 7-101. RTM RX Data Flop Hold/Setup Timing Constraints

RX Data Flop	HOLD (Y)	SETUP (X)
0	0.62	1.3
1	1.43	0.8
2	1.66	0.4
3	2.12	0.2
4	2.5	0
5	3.18	-0.3
6	3.87	-0.5
7	4.25	-0.7

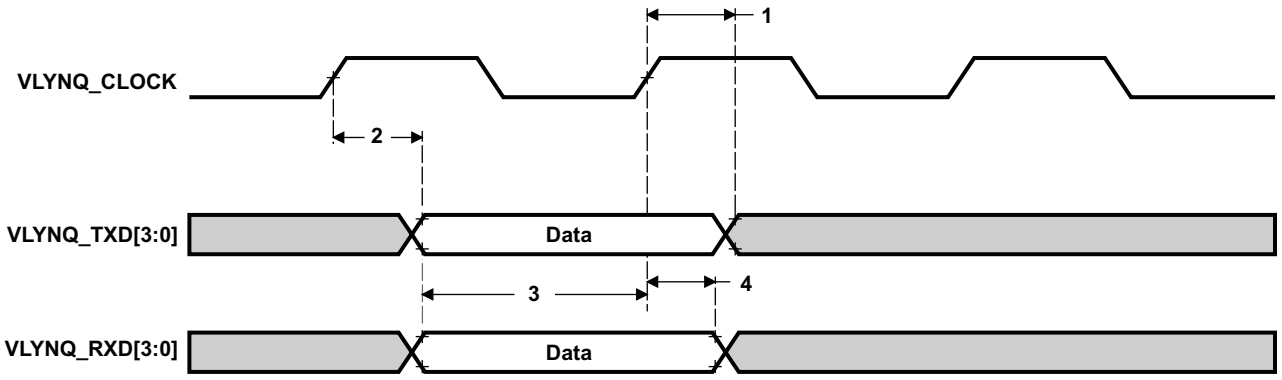

Figure 7-82. VLYNQ Transmit/Receive Timing

Copyright © 2007–2012, Texas Instruments Incorporated

7.22 Multichannel Audio Serial Port (McASP0/1) Peripherals

The multichannel audio serial port (McASP) functions as a general-purpose audio serial port optimized for the needs of multichannel audio applications. The McASP is useful for time-division multiplexed (TDM) stream, Inter-Integrated Sound (I2S) protocols, and intercomponent digital audio interface transmission (DIT).

7.22.1 McASP Device-Specific Information

The DM6467 device includes two multichannel audio serial port (McASP) interface peripherals (McASP0 and McASP1). The McASP0 module consists of a transmit and receive section. These sections can operate completely independently with different data formats, separate master clocks, bit clocks, and frame syncs or alternatively, the transmit and receive sections may be synchronized. The McASP0 module also includes a pool of 4 shift registers that may be configured to operate as either transmit data or receive data.

The transmit section of the McASP0 can transmit data in either a time-division-multiplexed (TDM) synchronous serial format or in a digital audio interface (DIT) format where the bit stream is encoded for S/PDIF, AES-3, IEC-60958, CP-430 transmission. The receive section of the McASP0 peripheral supports the TDM synchronous serial format.

The McASP0 module can support one transmit data format (either a TDM format or DIT format) and one receive format at a time. All transmit shift registers use the same format and all receive shift registers use the same format. However, the transmit and receive formats need not be the same. Both the transmit and receive sections of the McASP also support burst mode which is useful for non-audio data (for example, passing control information between two DSPs).

The McASP0 peripheral has additional capability for flexible clock generation, and error detection/handling, as well as error management.

The DM6467 McASP1 module is a reduced feature version of the McASP peripheral. The McASP1 module provides a single transmit-only shift register and can transmit data in DIT format only.

For more detailed information on and the functionality of the McASP peripheral, see the *TMS320DM646x DMSoC Multichannel Audio Serial Port (McASP)* User's Guide (literature number SPRUER1).

Copyright © 2007–2012, Texas Instruments Incorporated

7.22.2 McASP0 and McASP1 Peripheral Register Description(s)

Table 7-102. McASP0 Control Registers

HEX ADDRESS RANGE	ACRONYM	REGISTER NAME
01D0 1000	PID	Peripheral Identification register [Register value: 0x0010 0101]
01D0 1004	–	Reserved
01D0 1008	–	Reserved
01D0 100C	–	Reserved
01D0 1010	PFUNC	Pin function register
01D0 1014	PDIR	Pin direction register
01D0 1018	–	Reserved
01D0 101C	–	Reserved
01D0 1020	–	Reserved
01D0 1024 – 01D0 1040	–	Reserved
01D0 1044	GBLCTL	Global control register
01D0 1048	AMUTE	Mute control register
01D0 104C	DLBCTL	Digital Loop-back control register
01D0 1050	DITCTL	DIT mode control register
01D0 1054 – 01D0 105C	–	Reserved
01D0 1060	RGBLCTL	Alias of GBLCTL containing only Receiver Reset bits, allows transmit to be reset independently from receive.
01D0 1064	RMASK	Receiver format UNIT bit mask register
01D0 1068	RFMT	Receive bit stream format register
01D0 106C	AFSRCTL	Receive frame sync control register
01D0 1070	ACLKRCTL	Receive clock control register
01D0 1074	AHCLKRCTL	High-frequency receive clock control register
01D0 1078	RTDM	Receive TDM slot 0–31 register
01D0 107C	RINTCTL	Receiver interrupt control register
01D0 1080	RSTAT	Status register – Receiver
01D0 1084	RSLOT	Current receive TDM slot register
01D0 1088	RCLKCHK	Receiver clock check control register
01D0 108C	REVTCTL	Receiver DMA event control register
01D0 1090 – 01D0 109C	–	Reserved
01D0 10A0	XGBLCTL	Alias of GBLCTL containing only Transmitter Reset bits, allows transmit to be reset independently from receive.
01D0 10A4	XMASK	Transmit format UNIT bit mask register
01D0 10A8	XFMT	Transmit bit stream format register
01D0 10AC	AFSXCTL	Transmit frame sync control register
01D0 10B0	ACLKXCTL	Transmit clock control register
01D0 10B4	AHCLKXCTL	High-frequency Transmit clock control register
01D0 10B8	XTDM	Transmit TDM slot 0–31 register
01D0 10BC	XINTCTL	Transmit interrupt control register
01D0 10C0	XSTAT	Status register – Transmitter
01D0 10C4	XSLOT	Current transmit TDM slot
01D0 10C8	XCLKCHK	Transmit clock check control register
01D0 10CC	XEVTCTL	Transmit DMA event control register

Copyright © 2007–2012, Texas Instruments Incorporated

Table 7-102. McASP0 Control Registers (continued)

HEX ADDRESS RANGE	ACRONYM	REGISTER NAME
01D0 10D0 – 01D0 10FC	–	Reserved
01D0 1100	DITCSRA0	Left (even TDM slot) channel status register file
01D0 1104	DITCSRA1	Left (even TDM slot) channel status register file
01D0 1108	DITCSRA2	Left (even TDM slot) channel status register file
01D0 110C	DITCSRA3	Left (even TDM slot) channel status register file
01D0 1110	DITCSRA4	Left (even TDM slot) channel status register file
01D0 1114	DITCSRA5	Left (even TDM slot) channel status register file
01D0 1118	DITCSRB0	Right (odd TDM slot) channel status register file
01D0 111C	DITCSRB1	Right (odd TDM slot) channel status register file
01D0 1120	DITCSRB2	Right (odd TDM slot) channel status register file
01D0 1124	DITCSRB3	Right (odd TDM slot) channel status register file
01D0 1128	DITCSRB4	Right (odd TDM slot) channel status register file
01D0 112C	DITCSRB5	Right (odd TDM slot) channel status register file
01D0 1130	DITUDRA0	Left (even TDM slot) user data register file
01D0 1134	DITUDRA1	Left (even TDM slot) user data register file
01D0 1138	DITUDRA2	Left (even TDM slot) user data register file
01D0 113C	DITUDRA3	Left (even TDM slot) user data register file
01D0 1140	DITUDRA4	Left (even TDM slot) user data register file
01D0 1144	DITUDRA5	Left (even TDM slot) user data register file
01D0 1148	DITUDRB0	Right (odd TDM slot) user data register file
01D0 114C	DITUDRB1	Right (odd TDM slot) user data register file
01D0 1150	DITUDRB2	Right (odd TDM slot) user data register file
01D0 1154	DITUDRB3	Right (odd TDM slot) user data register file
01D0 1158	DITUDRB4	Right (odd TDM slot) user data register file
01D0 115C	DITUDRB5	Right (odd TDM slot) user data register file
01D0 1160 – 01D0 117C	–	Reserved
01D0 1180	SRCTL0	Serializer 0 control register
01D0 1184	SRCTL1	Serializer 1 control register
01D0 1188	SRCTL2	Serializer 2 control register
01D0 118C	SRCTL3	Serializer 3 control register
01D0 1190 – 01D0 11FC	–	Reserved
01D0 1200	XBUF0	Transmit Buffer for Serializer 0
01D0 1204	XBUF1	Transmit Buffer for Serializer 1
01D0 1208	XBUF2	Transmit Buffer for Serializer 2
01D0 120C	XBUF3	Transmit Buffer for Serializer 3
01D0 1210 – 01D0 127C	–	Reserved
01D0 1280	RBUF0	Receive Buffer for Serializer 0
01D0 1284	RBUF1	Receive Buffer for Serializer 1
01D0 1288	RBUF2	Receive Buffer for Serializer 2
01D0 128C	RBUF3	Receive Buffer for Serializer 3
01D0 1290 – 01D0 13FF	–	Reserved

Copyright © 2007–2012, Texas Instruments Incorporated

Table 7-103. McASP0 Data Registers

HEX ADDRESS RANGE	ACRONYM	REGISTER NAME	COMMENTS
01D0 1400 – 01D0 17FF	RBUF0/XBUF0	McASP0 receive buffers or McASP0 transmit buffers via the Peripheral Data Bus.	(Used when RSEL or XSEL bits = 0 [these bits are located in the RFMT or XFMT registers, respectively].)

Copyright © 2007–2012, Texas Instruments Incorporated

Table 7-104. McASP1 Control Registers

HEX ADDRESS RANGE	ACRONYM	REGISTER NAME
01D0 1800	PID	Peripheral Identification register [Register value: 0x0010 0101]
01D0 1804	–	Reserved
01D0 1808	–	Reserved
01D0 180C	–	Reserved
01D0 1810	PFUNC	Pin function register
01D0 1814	PDIR	Pin direction register
01D0 1818	–	Reserved
01D0 181C	–	Reserved
01D0 1820	–	Reserved
01D0 1824 – 01D0 1843	–	Reserved
01D0 1844	GBLCTL	Global control register
01D0 1848	–	Reserved
01D0 184C	DLBCTL	Digital Loop-back control register
01D0 1850	DITCTL	DIT mode control register
01D0 1854 – 01D0 185F	–	Reserved
01D0 1860	RGBLCTL	Alias of GBLCTL containing only Receiver Reset bits, allows transmit to be reset independently from receive.
01D0 1864	–	Reserved
01D0 1868	–	Reserved
01D0 186C	–	Reserved
01D0 1870	–	Reserved
01D0 1874	–	Reserved
01D0 1878	–	Reserved
01D0 187C	RINTCTL	Receiver interrupt control register
01D0 1880	RSTAT	Status register – Receiver
01D0 1884	–	
01D0 1888	–	
01D0 188C	–	
01D0 1890 – 01D0 189F	–	Reserved
01D0 18A0	XGBLCTL	Alias of GBLCTL containing only Transmitter Reset bits, allows transmit to be reset independently from receive.
01D0 18A4	XMASK	Transmit format UNIT bit mask register
01D0 18A8	XFMT	Transmit bit stream format register
01D0 18AC	AFSXCTL	Transmit frame sync control register
01D0 18B0	ACLKXCTL	Transmit clock control register
01D0 18B4	AHCLKXCTL	High-frequency Transmit clock control register
01D0 18B8	XTDM	Transmit TDM slot 0–31 register
01D0 18BC	XINTCTL	Transmit interrupt control register
01D0 18C0	XSTAT	Status register – Transmitter
01D0 18C4	XSLOT	Current transmit TDM slot
01D0 18C8	XCLKCHK	Transmit clock check control register
01D0 18CC	XEVTCTL	Transmit DMA event control register

Copyright © 2007–2012, Texas Instruments Incorporated

Table 7-104. McASP1 Control Registers (continued)

HEX ADDRESS RANGE	ACRONYM	REGISTER NAME
01D0 18D0 – 01D0 18FF	–	Reserved
01D0 1900	DITCSRA0	Left (even TDM slot) channel status register file
01D0 1904	DITCSRA1	Left (even TDM slot) channel status register file
01D0 1908	DITCSRA2	Left (even TDM slot) channel status register file
01D0 190C	DITCSRA3	Left (even TDM slot) channel status register file
01D0 1910	DITCSRA4	Left (even TDM slot) channel status register file
01D0 1914	DITCSRA5	Left (even TDM slot) channel status register file
01D0 1918	DITCSRB0	Right (odd TDM slot) channel status register file
01D0 191C	DITCSRB1	Right (odd TDM slot) channel status register file
01D0 1920	DITCSRB2	Right (odd TDM slot) channel status register file
01D0 1924	DITCSRB3	Right (odd TDM slot) channel status register file
01D0 1928	DITCSRB4	Right (odd TDM slot) channel status register file
01D0 192C	DITCSRB5	Right (odd TDM slot) channel status register file
01D0 1930	DITUDRA0	Left (even TDM slot) user data register file
01D0 1934	DITUDRA1	Left (even TDM slot) user data register file
01D0 1938	DITUDRA2	Left (even TDM slot) user data register file
01D0 193C	DITUDRA3	Left (even TDM slot) user data register file
01D0 1940	DITUDRA4	Left (even TDM slot) user data register file
01D0 1944	DITUDRA5	Left (even TDM slot) user data register file
01D0 1948	DITUDRB0	Right (odd TDM slot) user data register file
01D0 194C	DITUDRB1	Right (odd TDM slot) user data register file
01D0 1950	DITUDRB2	Right (odd TDM slot) user data register file
01D0 1954	DITUDRB3	Right (odd TDM slot) user data register file
01D0 1958	DITUDRB4	Right (odd TDM slot) user data register file
01D0 195C	DITUDRB5	Right (odd TDM slot) user data register file
01D0 1960 – 01D0 197F	–	Reserved
01D0 1980	SRCTL0	Serializer 0 control register
01D0 1984 – 01D0 19FF	–	Reserved
01D0 1A00	XBUF0	Transmit Buffer for Serializer 0
01D0 1A04 – 01D0 13FF	–	Reserved

Table 7-105. McASP1 Data Registers

HEX ADDRESS RANGE	ACRONYM	REGISTER NAME	COMMENTS
01D0 1C00 – 01D0 1FFF	XBUF1	McASP1 transmit buffers via the Peripheral Data Bus.	(Used when XSEL bits = 0 [these bits are located in the XFMT register].)

Copyright © 2007–2012, Texas Instruments Incorporated

7.22.3 McASP0 and McASP1 Electrical Data/Timing

7.22.3.1 Multichannel Audio Serial Port (McASP0) Timing

Table 7-106. Timing Requirements for McASP0 (see Figure 7-83 and Figure 7-84)(1)

NO.				-594, -729		UNIT
				MIN	MAX	
1	$t_{c(AHCKRX)}$	Cycle time, AHCLKR/X		20.8		ns
2	$t_{w(AHCKRX)}$	Pulse duration, AHCLKR/X high or low		8.3		ns
3	$t_{c(CKRX)}$	Cycle time, ACLKR/X	ACLKR/X ext	37		ns
4	$t_{w(CKRX)}$	Pulse duration, ACLKR/X high or low	ACLKR/X ext	15		ns
5	$t_{su(FRX-CKRX)}$	Setup time, AFSR/X input valid before ACLKR/X latches data	ACLKR/X int	15		ns
			ACLKR/X ext	3		ns
6	$t_{h(CKRX-FRX)}$	Hold time, AFSR/X input valid after ACLKR/X latches data	ACLKR/X int	0		ns
			ACLKR/X ext	3		ns
7	$t_{su(AXR-CKRX)}$	Setup time, AXR input valid before ACLKR/X latches data	ACLKR int	15		ns
			ACLKX int	14		ns
			ACLKR/X ext	3		ns
8	$t_{h(CKRX-AXR)}$	Hold time, AXR input valid after ACLKR/X latches data	ACLKR/X int	3		ns
			ACLKR/X ext	3		ns

(1) ACLKX internal: ACLKXCTL.CLKXM=1, PDIR.ACLKX = 1
ACLKX external input: ACLKXCTL.CLKXM=0, PDIR.ACLKX=0
ACLKX external output: ACLKXCTL.CLKXM=0, PDIR.ACLKX=1
ACLKR internal: ACLKRCTL.CLKRM=1, PDIR.ACLKR = 1
ACLKR external input: ACLKRCTL.CLKRM=0, PDIR.ACLKR=0
ACLKR external output: ACLKRCTL.CLKRM=0, PDIR.ACLKR=1

Copyright © 2007–2012, Texas Instruments Incorporated

Table 7-107. Switching Characteristics Over Recommended Operating Conditions for McASP0 (1) (2) (3) (see Figure 7-83 and Figure 7-84)

NO.	PARAMETER			-594, -729		UNIT
				MIN	MAX	
9	$t_{c(AHCKRX)}$	Cycle time, AHCLKR/X		41.7		ns
10	$t_{w(AHCKRX)}$	Pulse duration, AHCLKR/X high or low		AH - 2.5		ns
11	$t_{c(CKRX)}$	Cycle time, ACLKR/X	ACLKR/X int	41.7		ns
12	$t_{w(CKRX)}$	Pulse duration, ACLKR/X high or low	ACLKR/X int	A - 2.5		ns
13	$t_{d(CKRX-FRX)}$	Delay time, ACLKR/X transmit edge to AFSX/R output valid	ACLKR int	-2	5	ns
			ACLKX int	-1	5	ns
			ACLKR ext	0	15	ns
			ACLKX ext	0	16	ns
14	$t_{d(CKX-AXRV)}$	Delay time, ACLKX transmit edge to AXR output valid	ACLKX int	-2	5	ns
			ACLKX ext	0	16	ns
15	$t_{dis(CKRX-AXRHZ)}$	Disable time, AXR high impedance following last data bit from ACLKR/X transmit edge	ACLKR/X int	-3	8	ns
			ACLKR/X ext	-3	15	ns

(1) A = (ACLKR/X period)/2 in ns. For example, when ACLKR/X period is 25 ns, use A = 12.5 ns.
(2) AH = (AHCLKR/X period)/2 in ns. For example, when AHCLKR/X period is 25 ns, use AH = 12.5 ns.
(3) ACLKX internal: ACLKXCTL.CLKXM=1, PDIR.ACLKX = 1
ACLKX external input: ACLKXCTL.CLKXM=0, PDIR.ACLKX=0
ACLKX external output: ACLKXCTL.CLKXM=0, PDIR.ACLKX=1
ACLKR internal: ACLKRCTL.CLKRM=1, PDIR.ACLKR = 1
ACLKR external input: ACLKRCTL.CLKRM=0, PDIR.ACLKR=0
ACLKR external output: ACLKRCTL.CLKRM=0, PDIR.ACLKR=1

Copyright © 2007–2012, Texas Instruments Incorporated

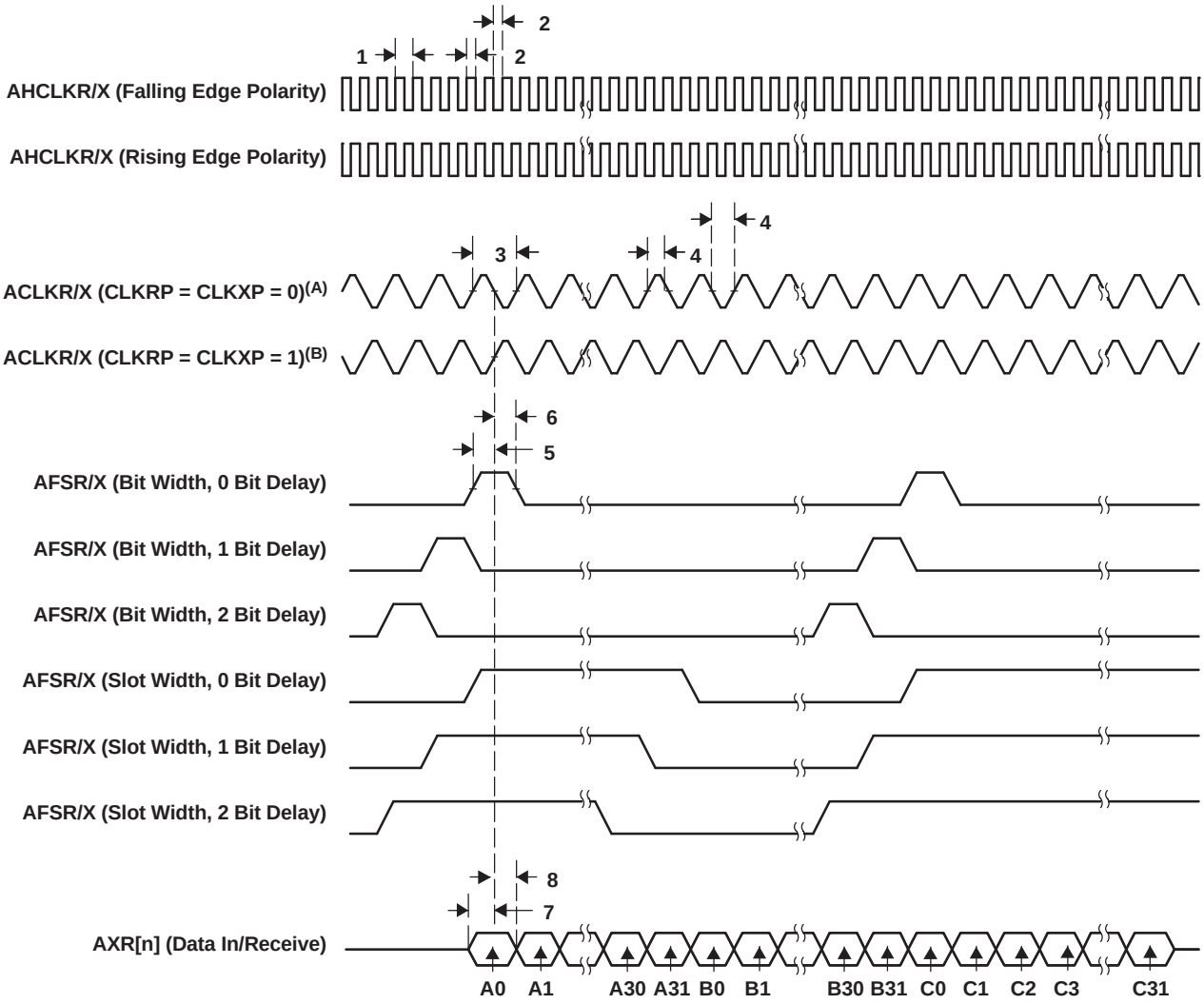

A. For CLKRP = CLKXP = 0, the McASP transmitter is configured for rising edge (to shift data out) and the McASP receiver is configured for falling edge (to shift data in).

B. For CLKRP = CLKXP = 1, the McASP transmitter is configured for falling edge (to shift data out) and the McASP receiver is configured for rising edge (to shift data in).

Figure 7-83. McASP0 and McASP1 Input Timings

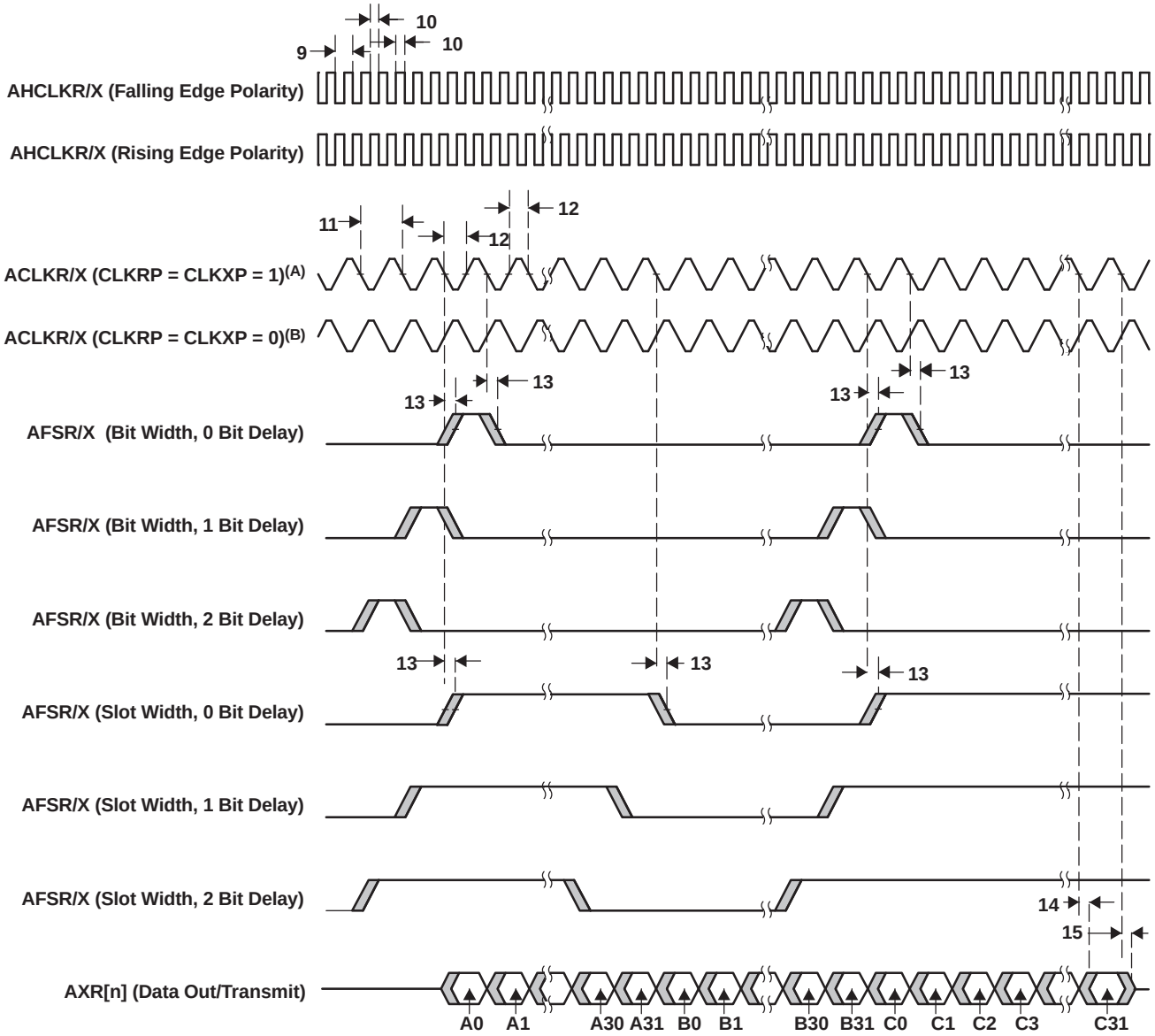

A. For CLKRP = CLKXP = 1, the McASP transmitter is configured for falling edge (to shift data out) and the McASP receiver is configured for rising edge (to shift data in).

B. For CLKRP = CLKXP = 0, the McASP transmitter is configured for rising edge (to shift data out) and the McASP receiver is configured for falling edge (to shift data in).

Figure 7-84. McASP0 and McASP1 Output Timings

Copyright © 2007–2012, Texas Instruments Incorporated

7.22.3.2 Multichannel Audio Serial Port (McASP1) DIT Timing

Table 7-108. Timing Requirements for McASP1 (see Figure 7-83 and Figure 7-84)(1)

NO.				-594, -729		UNIT
				MIN	MAX	
1	$t_{c(AHCKRX)}$	Cycle time, AHCLKX		20.8		ns
2	$t_{w(AHCKRX)}$	Pulse duration, AHCLKX high or low		8.3		ns
3	$t_{c(CKRX)}$	Cycle time, ACLKX	ACLKX ext	37		ns
4	$t_{w(CKRX)}$	Pulse duration, ACLKX high or low	ACLKX ext	15		ns

(1) ACLKX internal: ACLKXCTL.CLKXM=1, PDIR.ACLKX = 1
ACLKX external input: ACLKXCTL.CLKXM=0, PDIR.ACLKX=0
ACLKX external output: ACLKXCTL.CLKXM=0, PDIR.ACLKX=1

Copyright © 2007–2012, Texas Instruments Incorporated

Table 7-109. Switching Characteristics Over Recommended Operating Conditions for McASP1[1] [2] [3] (see Figure 7-83 and Figure 7-84)

NO.	PARAMETER			-594, -729		UNIT
				MIN	MAX	
9	$t_{c(AHCKRX)}$	Cycle time, AHCLKX		41.7		ns
10	$t_{w(AHCKRX)}$	Pulse duration, AHCLKX high or low		AH - 2.5		ns
11	$t_{c(CKRX)}$	Cycle time, ACLKX		41.7		ns
12	$t_{w(CKRX)}$	Pulse duration, ACLKX high or low	ACLKR/X int	A - 2.5		ns
14	$t_{d(CKX-AXRV)}$	Delay time, ACLKX transmit edge to AXR output valid	ACLKX int	-1	5	ns
			ACLKX ext	0	16	ns
15	$t_{dis(CKRX-AXRHZ)}$	Disable time, AXR high impedance following last data bit from ACLKX transmit edge	ACLKX int	-3	8	ns
			ACLKX ext	-3	15	ns

(1) A = (ACLKX period)/2 in ns. For example, when ACLKX period is 25 ns, use A = 12.5 ns.
(2) AH = (AHCLKX period)/2 in ns. For example, when AHCLKX period is 25 ns, use AH = 12.5 ns.
(3) ACLKX internal: ACLKXCTL.CLKXM=1, PDIR.ACLKX = 1
ACLKX external input: ACLKXCTL.CLKXM=0, PDIR.ACLKX=0
ACLKX external output: ACLKXCTL.CLKXM=0, PDIR.ACLKX=1

Copyright © 2007–2012, Texas Instruments Incorporated

7.23 Serial Peripheral Interface (SPI)

The SPI is a high-speed synchronous serial input/output port that allows a serial bit stream of programmed length (2-to-16 bits) to be shifted into and out of the device at a programmed bit-transfer rate. The SPI is normally used for communication between the TMS320DM646x DMSoC and external peripherals. Typical applications inlcude a interface to external I/O or peripheral expansion via devices such as shift regisers, display drivers, SPI EEPROMs, and Analog-to-Digital Converters (ADCs).

7.23.1 SPI Device-Specific Information

The DM6467 SPI supports the following features:

- Master/slave operation
- 2 chip selects for interfacing/control to multiple SPI slave devices
- 3-, 4-, 5-wire interface [The DM6467 supports 3-pin mode, 2 4-pin modes, and the 5-pin mode.]
- 16-bit shift register
- Receive buffer register
- 8-bit clock prescaler
- Programmable SPI clock frequency range, character length, and clock phase and polarity

7.23.2 SPI Peripheral Register Description(s)

Table 7-110 shows the SPI registers.

Table 7-110. SPI Registers

HEX ADDRESS RANGE	ACRONYM	REGISTER NAME
01C6 6800	SPIGCR0	SPI Global Control Register 0
01C6 6804	SPIGCR1	SPI Global Control Register 1
01C6 5808	SPIINT	SPI Interrupt Register
01C6 680C	SPIILVL	SPI Interrupt Level Register
01C6 6810	SPIFLG	SPI Flag Status Register
01C6 6814	SPIPC0	SPI Pin Control Register 0
01C6 6818	–	Reserved
01C6 681C	SPIPC2	SPI Pin Control Register 2
01C6 6820 – 01C6 6838	–	Reserved
01C6 683C	SPIDAT1	SPI Shift Register 1
01C6 6840	SPIBUF	SPI Buffer Register
01C6 6844	SPIEMU	SPI Emulation Register
01C6 6848	SPIDELAY	SPI Delay Register
01C6 684C	SPIDEF	SPI Default Chip Select Register
01C6 6850	SPIFMT0	SPI Data Format Register 0
01C6 6854	SPIFMT1	SPI Data Format Register 1
01C6 6858	SPIFMT2	SPI Data Format Register 2
01C6 685C	SPIFMT3	SPI Data Format Register 3
01C6 6860	INTVEC0	SPI Interrupt Vector Register 0
01C6 6864	INTVEC1	SPI Interrupt Vector Register 1
01C6 6868 – 01C6 6FFF	–	Reserved

Copyright © 2007–2012, Texas Instruments Incorporated

7.23.3 SPI Electrical Data/Timing

Master Mode — General

Table 7-111. General Switching Characteristics in Master Mode(1)

NO.	PARAMETER		MIN	MAX	UNIT
1	$t_{c(CLK)}$	Cycle time, SPI_CLK	2P		ns
2	$t_{w(CLKH)}$	Pulse width, SPI_CLK high	P		ns
3	$t_{w(CLKL)}$	Pulse width, SPI_CLK low	P		ns
4	$t_{osu(SIMO-CLK)}$	Output setup time, SPI_SIMO valid (1st bit) before initial SPI_CLK rising edge, 3-/4-/5-pin mode, polarity = 0, phase = 0	2P		ns
		Output setup time, SPI_SIMO valid (1st bit) before initial SPI_CLK rising edge, 3-/4-/5-pin mode, polarity = 0, phase = 1	0.5T + 2P		
		Output setup time, SPI_SIMO valid (1st bit) before initial SPI_CLK falling edge, 3-/4-/5-pin mode, polarity = 1, phase = 0	2P		
		Output setup time, SPI_SIMO valid (1st bit) before initial SPI_CLK falling edge, 3-/4-/5-pin mode, polarity = 1, phase = 1	0.5T + 2P		
5	$t_{d(CLK-SIMO)}$	Delay time, SPI_CLK transmit rising edge to SPI_SIMO output valid (subsequent bit driven), 3-/4-/5-pin mode, polarity = 0, phase = 0		5	ns
		Delay time, SPI_CLK transmit falling edge to SPI_SIMO output valid (subsequent bit driven), 3-/4-/5-pin mode, polarity = 0, phase = 1		5	
		Delay time, SPI_CLK transmit falling edge to SPI_SIMO output valid (subsequent bit driven), 3-/4-/5-pin mode, polarity = 1, phase = 0		5	
		Delay time, SPI_CLK transmit rising edge to SPI_SIMO output valid (subsequent bit driven), 3-/4-/5-pin mode, polarity = 1, phase = 1		5	
6	$t_{oh(CLK-SIMO)}$	Output hold time, SPI_SIMO valid (except final bit) after receive falling edge of SPI_CLK, 3-/4-/5-pin mode, polarity = 0, phase = 0	0.5T – 4		ns
		Output hold time, SPI_SIMO valid (except final bit) after receive rising edge of SPI_CLK, 3-/4-/5-pin mode, polarity = 0, phase = 1	0.5T – 4		
		Output hold time, SPI_SIMO valid (except final bit) after receive rising edge of SPI_CLK, 3-/4-/5-pin mode, polarity = 1, phase = 0	0.5T – 4		
		Output hold time, SPI_SIMO valid (except final bit) after receive falling edge of SPI_CLK, 3-/4-/5-pin mode, polarity = 1, phase = 1	0.5T – 4		

(1) T = period of SPI_CLK; P = period of SPI core clock

Copyright © 2007–2012, Texas Instruments Incorporated

Table 7-112. General Input Timing Requirements in Master Mode

NO.			MIN	MAX	UNIT
7	$t_{su(SOMI-CLK)}$	Setup time, SPI_SOMI valid before receive falling edge of SPI_CLK, 3-/4-/5-pin mode, polarity = 0, phase = 0	4		ns
		Setup time, SPI_SOMI valid before receive rising edge of SPI_CLK, 3-/4-/5-pin mode, polarity = 0, phase = 1	4		
		Setup time, SPI_SOMI valid before receive rising edge of SPI_CLK, 3-/4-/5-pin mode, polarity = 1, phase = 0	4		
		Setup time, SPI_SOMI valid before receive falling edge of SPI_CLK, 3-/4-/5-pin mode, polarity = 1, phase = 1	4		
8	$t_{h(CLK-SOMI)}$	Hold time, SPI_SOMI valid after receive falling edge of SPI_CLK, 3-/4-/5-pin mode, polarity = 0, phase = 0	2		ns
		Hold time, SPI_SOMI valid after receive rising edge of SPI_CLK, 3-/4-/5-pin mode, polarity = 0, phase = 1	2		
		Hold time, SPI_SOMI valid after receive rising edge of SPI_CLK, 3-/4-/5-pin mode, polarity = 1, phase = 0	2		
		Hold time, SPI_SOMI valid after receive falling edge of SPI_CLK, 3-/4-/5-pin mode, polarity = 1, phase = 1	2		

Copyright © 2007–2012, Texas Instruments Incorporated

Slave Mode — General

Table 7-113. General Switching Characteristics in Slave Mode (For 3-/4-/5-Pin Modes)(1)

NO.	PARAMETER		MIN	MAX	UNIT
13	$t_{d(CLK-SOMI)}$	Delay time, transmit rising edge of SPI_CLK to SPI_SOMI output valid, 3-/4-/5-pin mode, polarity = 0, phase = 0		15	ns
		Delay time, transmit falling edge of SPI_CLK to SPI_SOMI output valid, 3-/4-/5-pin mode, polarity = 0, phase = 1		15	
		Delay time, transmit falling edge of SPI_CLK to SPI_SOMI output valid, 3-/4-/5-pin mode, polarity = 1, phase = 0		15	
		Delay time, transmit rising edge of SPI_CLK to SPI_SOMI output valid, 3-/4-/5-pin mode, polarity = 1, phase = 1		15	
14	$t_{oh(CLK-SOMI)}$	Output hold time, SPI_SOMI valid (except final bit) after receive falling edge of SPI_CLK, 3-/4-/5-pin mode, polarity = 0, phase = 0	0.5T – 4		ns
		Output hold time, SPI_SOMI valid (except final bit) after receive rising edge of SPI_CLK, 3-/4-/5-pin mode, polarity = 0, phase = 1	0.5T – 4		
		Output hold time, SPI_SOMI valid (except final bit) after receive rising edge of SPI_CLK, 3-/4-/5-pin mode, polarity = 1, phase = 0	0.5T – 4		
		Output hold time, SPI_SOMI valid (except final bit) after receive falling edge of SPI_CLK, 3-/4-/5-pin mode, polarity = 1, phase = 1	0.5T – 4		

(1) T = period of SPI_CLK

Copyright © 2007–2012, Texas Instruments Incorporated

Table 7-114. General Input Timing Requirements in Slave Mode(1)

NO.			MIN	MAX	UNIT
9	$t_{c(CLK)}$	Cycle time, SPI_CLK	2P		ns
10	$t_{w(CLKH)}$	Pulse width, SPI_CLK high	P		ns
11	$t_{w(CLKL)}$	Pulse width, SPI_CLK low	P		ns
15	$t_{su(SIMO-CLK)}$	Setup time, SPI_SIMO data valid before receive falling edge of SPI_CLK, 3-/4-/5-pin mode, polarity = 0, phase = 0	2P		ns
		Setup time, SPI_SIMO data valid before receive rising edge of SPI_CLK, 3-/4-/5-pin mode, polarity = 0, phase = 1	2P		
		Setup time, SPI_SIMO data valid before receive rising edge of SPI_CLK, 3-/4-/5-pin mode, polarity = 1, phase = 0	2P		
		Setup time, SPI_SIMO data valid before receive falling edge of SPI_CLK, 3-/4-/5-pin mode, polarity = 1, phase = 1	2P		
16	$t_{h(CLK-SIMO)}$	Hold time, SPI_SIMO data valid after receive falling edge of SPI_CLK, 3-/4-/5-pin mode, polarity = 0, phase = 0	2		ns
		Hold time, SPI_SIMO data valid after receive rising edge of SPI_CLK, 3-/4-/5-pin mode, polarity = 0, phase = 1	2		
		Hold time, SPI_SIMO data valid after receive rising edge of SPI_CLK, 3-/4-/5-pin mode, polarity = 1, phase = 0	2		
		Hold time, SPI_SIMO data valid after receive falling edge of SPI_CLK, 3-/4-/5-pin mode, polarity = 1, phase = 1	2		

(1) P = period of SPI core clock

Copyright © 2007–2012, Texas Instruments Incorporated

Master Mode — Additional

Table 7-115. Additional Output Switching Characteristics of 4-Pin Enable Option in Master Mode(1) (2)

NO.	PARAMETER		MIN	MAX	UNIT
17	$t_{d(EN-CLK)}$	Delay time, slave assertion of $\overline{SPI_EN}$ active to first SPI_CLK rising edge from master, 4-pin mode, polarity = 0, phase = 0		3P + 6	ns
		Delay time, slave assertion of $\overline{SPI_EN}$ active to first SPI_CLK rising edge from master, 4-pin mode, polarity = 0, phase = 1		0.5T + 3P + 6	
		Delay time, slave assertion of $\overline{SPI_EN}$ active to first SPI_CLK falling edge from master, 4-pin mode, polarity = 1, phase = 0		3P + 6	
		Delay time, slave assertion of $\overline{SPI_EN}$ active to first SPI_CLK falling edge from master, 4-pin mode, polarity = 1, phase = 1		0.5T + 3P + 6	

(1) T = period of SPI_CLK; P = period of SPI core clock
(2) Figure 7-87 shows only polarity = 0, phase = 0 as an example. In this case, the Master SPI is ready with new data before $\overline{SPI_EN}$ assertion.

Table 7-116. Additional Input Timing Requirements of 4-Pin Enable Option in Master Mode(1) (2)

NO.			MIN	MAX	UNIT
18	$t_{d(CLK-EN)}$	Delay time, max delay for slave to deassert $\overline{SPI_EN}$ after final SPI_CLK falling edge, 4-pin mode, polarity = 0, phase = 0		0.5T + P	ns
		Delay time, max delay for slave to deassert $\overline{SPI_EN}$ after final SPI_CLK falling edge, 4-pin mode, polarity = 0, phase = 1		P	
		Delay time, max delay for slave to deassert $\overline{SPI_EN}$ after final SPI_CLK rising edge, 4-pin mode, polarity = 1, phase = 0		0.5T + P	
		Delay time, max delay for slave to deassert $\overline{SPI_EN}$ after final SPI_CLK rising edge, 4-pin mode, polarity = 1, phase = 1		P	

(1) T = period of SPI_CLK; P = period of SPI core clock
(2) Figure 7-87 shows only polarity = 0, phase = 0 as an example. In this case, the Master SPI is ready with new data before $\overline{SPI_EN}$ deassertion.

Copyright © 2007–2012, Texas Instruments Incorporated

Table 7-117. Additional Output Switching Characteristics of 4-Pin Chip-Select Option in Master Mode(1) (2)

NO.	PARAMETER		MIN	MAX	UNIT
19	$t_{osu(CS-CLK)}$ (3)	Output setup time, SPI_CS[n] active before first SPI_CLK rising edge, polarity = 0, phase = 0, SPIDELAY.C2TDELAY = 0		(C2TDELAY + 2) * P - 6	ns
		Output setup time, SPI_CS[n] active before first SPI_CLK rising edge, polarity = 0, phase = 1, SPIDELAY.C2TDELAY = 0		(C2TDELAY + 2) * P - 6	
		Output setup time, SPI_CS[n] active before first SPI_CLK falling edge, polarity = 1, phase = 0, SPIDELAY.C2TDELAY = 0		(C2TDELAY + 2) * P - 6	
		Output setup time, SPI_CS[n] active before first SPI_CLK falling edge, polarity = 1, phase = 1, SPIDELAY.C2TDELAY = 0		(C2TDELAY + 2) * P - 6	
20	$t_{d(CLK-CS)}$	Delay time, final SPI_CLK falling edge to master deasserting SPI_CS[n], polarity = 0, phase = 0, SPIDELAY.T2CDELAY = 0, SPIDAT1.CSHOLD not enabled	(T2CDELAY + 1) * P - 6		ns
		Delay time, final SPI_CLK falling edge to master deasserting SPI_CS[n], polarity = 0, phase = 1, SPIDELAY.T2CDELAY = 0, SPIDAT1.CSHOLD not enabled	(T2CDELAY + 1) * P - 6		
		Delay time, final SPI_CLK rising edge to master deasserting SPI_CS[n], polarity = 1, phase = 0, SPIDELAY.T2CDELAY = 0, SPIDAT1.CSHOLD not enabled	(T2CDELAY + 1) * P - 6		
		Delay time, final SPI_CLK rising edge to master deasserting SPI_CS[n], polarity = 1, phase = 1, SPIDELAY.T2CDELAY = 0, SPIDAT1.CSHOLD not enabled	(T2CDELAY + 2) * P - 6		

(1) P = period of SPI core clock
(2) Figure 7-87 shows only polarity = 0, phase = 0 as an example.
(3) The Master SPI is ready with new data before SPI_CS[n] assertion.

Copyright © 2007–2012, Texas Instruments Incorporated

Table 7-118. Additional Output Switching Characteristics of 5-Pin Option in Master Mode(1)

NO.	PARAMETER		MIN	MAX	UNIT
32	$t_{d(CLK-CS)}$ (2)	Delay time, final SPI_CLK falling edge to master deasserting SPI_CS[n], polarity = 0, phase = 0, SPIDELAY.T2CDELAY = 0, SPIDAT1.CSHOLD not enabled	(T2CDELAY + 2) * P - 6		ns
		Delay time, final SPI_CLK rising edge to master deasserting SPI_CS[n], polarity = 0, phase = 1, SPIDELAY.T2CDELAY[4:0] = 0, SPIDAT1.CSHOLD not enabled	(T2CDELAY + 2) * P - 6		
		Delay time, final SPI_CLK rising edge to master deasserting SPI_CS[n], polarity = 1, phase = 0, SPIDELAY.T2CDELAY = 0, SPIDAT1.CSHOLD not enabled	(T2CDELAY + 2) * P - 6		
		Delay time, final SPI_CLK falling edge to master deasserting SPI_CS[n], polarity = 1, phase = 1, SPIDELAY.T2CDELAY = 0, SPIDAT1.CSHOLD not enabled	(T2CDELAY + 2) * P - 6		
22	$t_{osu(CS-CLK)}$ (2) (3)	Output setup time, SPI_CS[n] active before first SPI_CLK rising edge, polarity = 0, phase = 0, SPIDELAY.C2TDELAY = 0	(C2TDELAY + 2) * P - 6		ns
		Output setup time, SPI_CS[n] active before first SPI_CLK rising edge, polarity = 0, phase = 1, SPIDELAY.C2TDELAY = 0	(C2TDELAY + 2) * P - 6		
		Output setup time, SPI_CS[n] active before first SPI_CLK falling edge, polarity = 1, phase = 0, SPIDELAY.C2TDELAY = 0	(C2TDELAY + 2) * P - 6		
		Output setup time, SPI_CS[n] active before first SPI_CLK falling edge, polarity = 1, phase = 1, SPIDELAY.C2TDELAY = 0	(C2TDELAY + 2) * P - 6		
23	$t_{d(CLK-EN)}$ (2)	Delay time, SPI_EN assertion low to first SPI_CLK rising edge, polarity = 0, phase = 0, SPI_EN was initially deasserted and SPI_CLK delayed		0.5T + P	ns
		Delay time, SPI_EN assertion low to first SPI_CLK rising edge, polarity = 0, phase = 1, SPI_EN was initially deasserted and SPI_CLK delayed		P	
		Delay time, SPI_EN assertion low to first SPI_CLK falling edge, polarity = 1, phase = 0, SPI_EN was initially deasserted and SPI_CLK delayed		0.5T + P	
		Delay time, SPI_EN assertion low to first SPI_CLK falling edge, polarity = 1, phase = 1, SPI_EN was initially deasserted and SPI_CLK delayed		P	

(1) T = period of SPI_CLK; P = period of SPI core clock
(2) Figure 7-87 shows only polarity = 0, phase = 0 as an example.
(3) SPI_EN is immediately asserted, the SPI Master is ready with new data before SPI_CS[n] assertion.

Copyright © 2007–2012, Texas Instruments Incorporated

Table 7-119. Additional Input Timing Requirements of 5-Pin Option in Master Mode(1)

NO.			MIN	MAX	MIN	MAX	UNIT
21	$t_{d(CSL-ENA)}$	Delay time, max delay for slave SPI to drive SPI_ENA valid after master asserts SPI_CS[n] to delay the master from beginning the next transfer		0.5P		0.5D	ns
31	$t_{d(CLK-ENA)}$ (2) (3)	Delay time, max delay for slave to deassert SPI_ENA after final SPI_CLK falling edge, 5-pin mode, polarity = 0, phase = 0		0.5T		0.5T	ns
		Delay time, max delay for slave to deassert SPI_ENA after final SPI_CLK falling edge, 5-pin mode, polarity = 0, phase = 1		0		0	
		Delay time, max delay for slave to deassert SPI_ENA after final SPI_CLK rising edge, 5-pin mode, polarity = 1, phase = 0		0.5T		0.5T	
		Delay time, max delay for slave to deassert SPI_ENA after final SPI_CLK rising edge, 5-pin mode, polarity = 1, phase = 1		0		0	

(1) T = period of SPI_CLK; P = period of SPI core clock; D = period of 24-MHz clock
(2) SPI master is ready with new data before SPI_ENA deassertion.
(3) Figure 7-87 shows only polarity = 0, phase = 0 as an example.

Slave Mode — Additional

Table 7-120. Additional Output Switching Characteristics of 4-Pin Enable Option in Slave Mode(1)

NO.	PARAMETER		MIN	MAX	UNIT
SPI24	$t_{d(CLK-EN)}$ (2)	Delay time, final SPI_CLK falling edge to slave deasserting SPI_EN, polarity = 0, phase = 0	P – 6	3P + 15	ns
		Delay time, final SPI_CLK falling edge to slave deasserting SPI_EN, polarity = 0, phase = 1	0.5T + P – 6	0.5T + 3P + 15	
		Delay time, final SPI_CLK rising edge to slave deasserting SPI_EN, polarity = 1, phase = 0	P – 6	3P + 15	
		Delay time, final SPI_CLK rising edge to slave deasserting SPI_EN, polarity = 1, phase = 1	0.5T + P – 6	0.5T + 3P + 15	

(1) T = period of SPI_CLK; P = period of SPI core clock
(2) Figure 7-88 shows only polarity = 0, phase = 0 as an example.

Table 7-121. Additional Output Switching Characteristics of 4-Pin Chip-Select Option in Slave Mode(1)

NO.	PARAMETER		MIN	MAX	UNIT
27	$t_{d(CSL-SOMI)}$	Delay time, master asserting SPI_CS[n] to slave driving SPI_SOMI data valid		P + 6	ns
28	$t_{dis(CSH-SOMI)}$	Disable time, master deasserting SPI_CS[n] to slave driving SPI_SOMI high impedance		P + 6	ns

(1) T = period of SPI_CLK; P = period of SPI core clock

Copyright © 2007–2012, Texas Instruments Incorporated

Table 7-122. Additional Input Timing Requirements of 4-Pin Chip-Select Option in Slave Mode(1)

NO.			MIN	MAX	UNIT
25	$t_{su(CSL-CLK)}$	Setup time, SPI_CS[n] asserted at slave to first SPI_CLK edge (rising or falling) at slave	2P + 6		ns
26	$t_{d(CLK-CSH)}$ (2)	Delay time, final falling edge SPI_CLK to SPI_CS[n] deasserted, polarity = 0, phase = 0	0.5T + P + 6		ns
		Delay time, final falling edge SPI_CLK to SPI_CS[n] deasserted, polarity = 0, phase = 1	P + 6		
		Delay time, final rising edge SPI_CLK to SPI_CS[n] deasserted, polarity = 1, phase = 0	0.5T + P + 6		
		Delay time, final rising edge SPI_CLK to SPI_CS[n] deasserted, polarity = 1, phase = 1	P + 6		

(1) T = period of SPI_CLK; P = period of SPI core clock
(2) Figure 7-88 shows only polarity = 0, phase = 0 as an example.

Table 7-123. Additional Output Switching Characteristics of 5-Pin Option in Slave Mode(1)

NO.	PARAMETER		MIN	MAX	UNIT
SPI33	$t_{en(CSL-SOMI)}$	Enable time, master asserting SPI_CS[n] to slave driving SPI_SOMI valid		P + 6	ns
SPI34	$t_{dis(CSH-SOMI)}$	Disable time, master deasserting SPI_CS[n] to slave driving SPI_SOMI high impedance		P + 6	ns
SPI29	$t_{en(CSL-EN)}$	Enable time, master asserting SPI_CS[n] to slave driving SPI_EN		6	ns
SPI30	$t_{dis(CLK-ENZ)}$ (2)	Disable time, final clock receive falling edge of SPI_CLK to slave drive SPI_EN high impedance, polarity = 0, phase = 0, SPIINT0.ENABLE HIGHZ = 1		1.5P + 6	ns
		Disable time, final clock receive rising edge of SPI_CLK to slave drive SPI_EN high impedance, polarity = 0, phase = 1, SPIINT0.ENABLE HIGHZ = 1		1.5P + 6	
		Disable time, final clock receive rising edge of SPI_CLK to slave drive SPI_EN high impedance, polarity = 1, phase = 0, SPIINT0.ENABLE HIGHZ = 1		1.5P + 6	
		Disable time, final clock receive falling edge of SPI_CLK to slave drive SPI_EN high impedance, polarity = 1, phase = 1, SPIINT0.ENABLE HIGHZ = 1		1.5P + 6	
37	$t_{dis(CSH-ENH)}$ (2)	Disable time, SPI_CS[n] deassertion to slave drive SPI_EN high impedance, polarity = 0, phase = 0, SPIINT0.ENABLE HIGHZ = 1		P + 6	ns
		Disable time, SPI_CS[n] deassertion to slave drive SPI_EN high impedance, polarity = 0, phase = 1, SPIINT0.ENABLE HIGHZ = 1		P + 6	
		Disable time, SPI_CS[n] deassertion to slave drive SPI_EN high impedance, polarity = 1, phase = 0, SPIINT0.ENABLE HIGHZ = 1		P + 6	
		Disable time, SPI_CS[n] deassertion to slave drive SPI_EN high impedance, polarity = 1, phase = 1, SPIINT0.ENABLE HIGHZ = 1		P + 6	
38	$t_{d(CLK-ENZ)}$ (2)	Delay time, final clock receive edge on SPI_CLK to slave deasserting SPI_EN, polarity = 0, phase = 0, SPIINT0.ENABLE HIGHZ = 0		3P + 15	ns
		Delay time, final clock receive edge on SPI_CLK to slave deasserting SPI_EN, polarity = 0, phase = 1, SPIINT0.ENABLE HIGHZ = 0		0.5T + 3P + 15	
		Delay time, final clock receive edge on SPI_CLK to slave deasserting SPI_EN, polarity = 1, phase = 0, SPIINT0.ENABLE HIGHZ = 0		3P + 15	
		Delay time, final clock receive edge on SPI_CLK to slave deasserting SPI_EN, polarity = 1, phase = 1, SPIINT0.ENABLE HIGHZ = 0		0.5T + 3P + 15	

(1) T = period of SPI_CLK; P = period of SPI core clock
(2) Figure 7-88 shows only polarity = 0, phase = 0 as an example.

Copyright © 2007–2012, Texas Instruments Incorporated

Table 7-123. Additional Output Switching Characteristics of 5-Pin Option in Slave Mode[1] (continued)

NO.	PARAMETER		MIN	MAX	UNIT
39	$t_{d(CSH-ENH)}$ [2]	Delay time, $\overline{SPI_CS[n]}$ deassertion to slave deasserting $\overline{SPI_EN}$, polarity = 0, phase = 0, SPIINT0.ENABLE HIGHZ = 0		6	ns
		Delay time, $\overline{SPI_CS[n]}$ deassertion to slave deasserting $\overline{SPI_EN}$, polarity = 0, phase = 1, SPIINT0.ENABLE HIGHZ = 0		6	
		Delay time, $\overline{SPI_CS[n]}$ deassertion to slave deasserting $\overline{SPI_EN}$, polarity = 1, phase = 0, SPIINT0.ENABLE HIGHZ = 0		6	
		Delay time, $\overline{SPI_CS[n]}$ deassertion to slave deasserting $\overline{SPI_EN}$ polarity = 1, phase = 1, SPIINT0.ENABLE HIGHZ = 0		6	

Table 7-124. Additional Input Timing Requirements of 5-Pin Option in Slave Mode[1]

NO.			MIN	MAX	UNIT
35	$t_{d(CSL-CLK)}$	Delay time, $\overline{SPI_CS[n]}$ asserted at slave to first clock edge (rising or falling) of SPI_CLK at slave	P		ns
36	$t_{d(CLK-CSH)}$ [2]	Delay time, SPI_CLK falling edge to $\overline{SPI_CS[n]}$ deasserted, polarity = 0, phase = 0	0.5T + P + 6		ns
		Delay time, SPI_CLK falling edge to $\overline{SPI_CS[n]}$ deasserted, polarity = 0, phase = 1	P + 6		
		Delay time, SPI_CLK rising edge to $\overline{SPI_CS[n]}$ deasserted, polarity = 1, phase = 0	0.5T + P + 6		
		Delay time, SPI_CLK rising edge to $\overline{SPI_CS[n]}$ deasserted, polarity = 1, phase = 1	P + 6		

(1) T = period of SPI_CLK; P = period of SPI core clock
(2) Figure 7-88 shows only polarity = 0, phase = 0 as an example.

Copyright © 2007–2012, Texas Instruments Incorporated

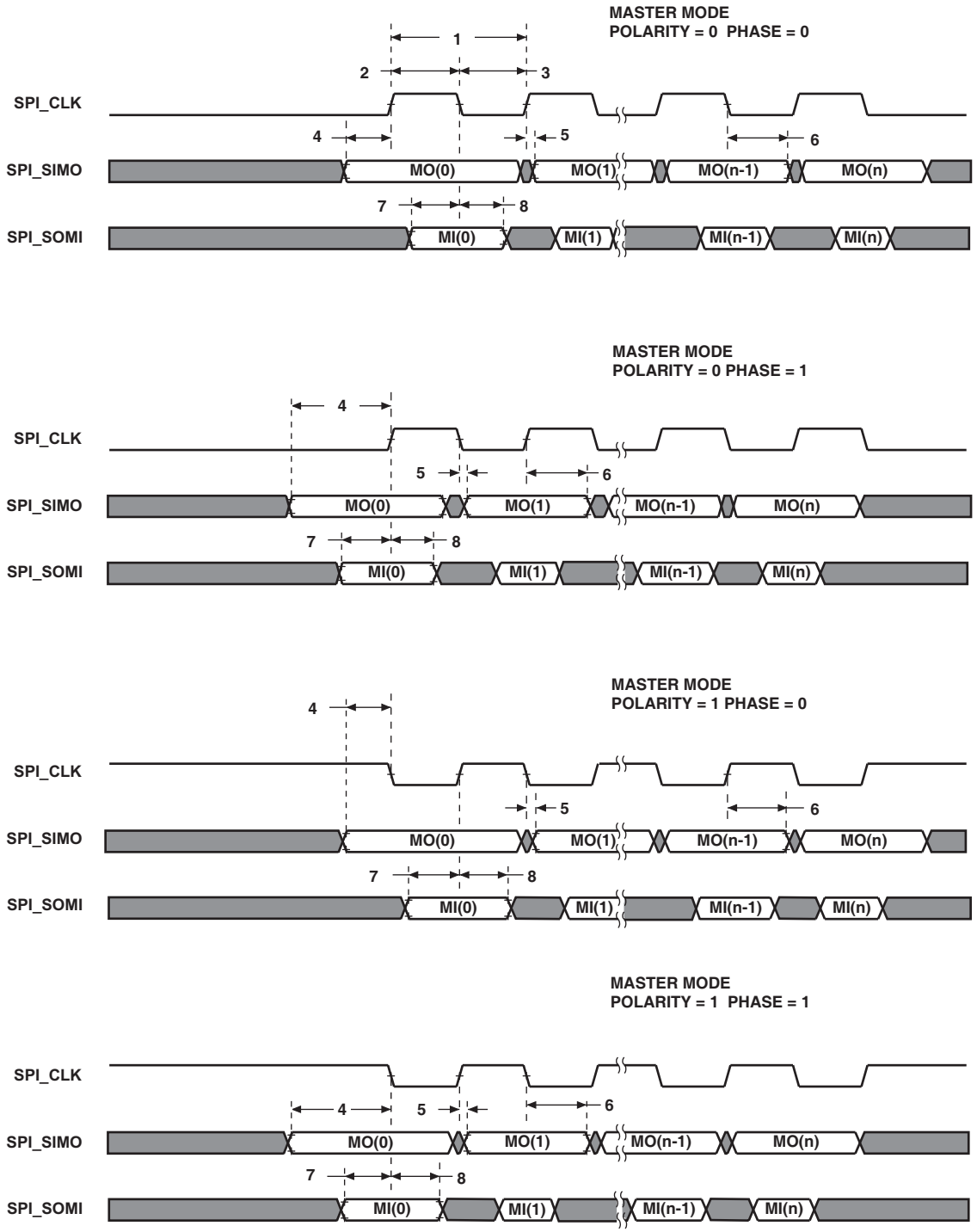

Figure 7-85. SPI Timings—Master Mode

Copyright © 2007–2012, Texas Instruments Incorporated

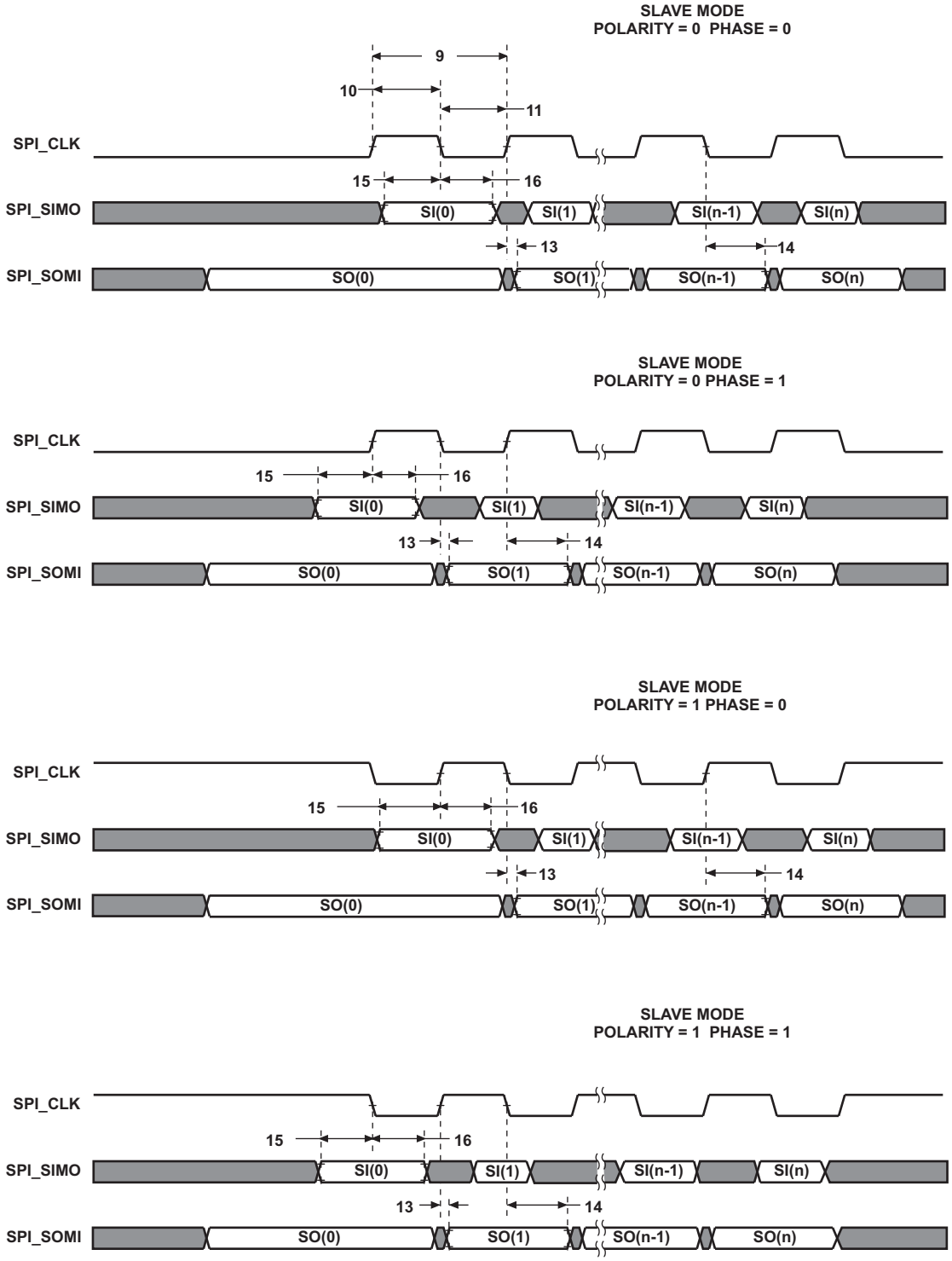

A. The first bit of transmit data becomes valid on the SPI_SOMI pin when software writes to the SPIDAT0/1 register(s). See the *TMS320DM646x DMSoC Serial Peripheral Interface (SPI)* User's Guide (literature number SPRUER4).

Figure 7-86. SPI Timings—Slave Mode

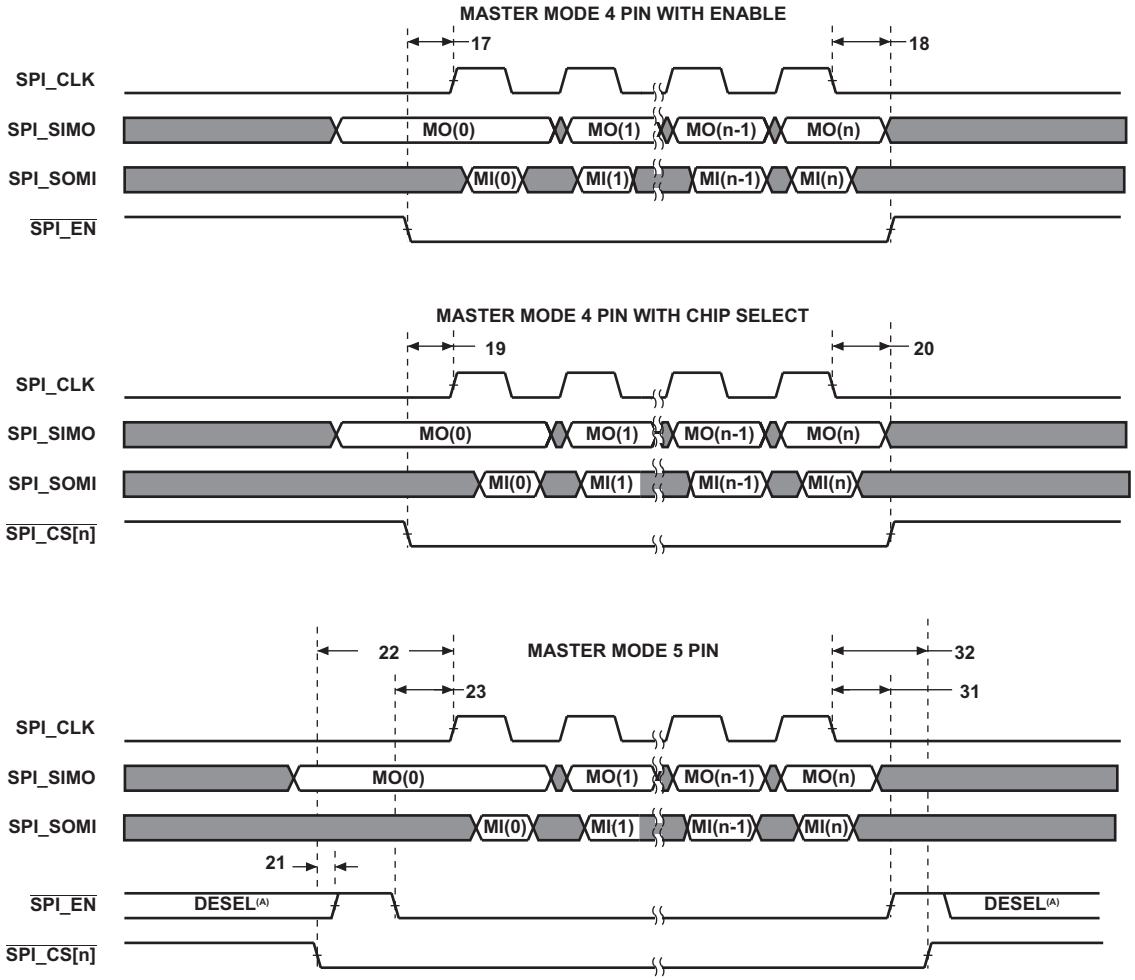

A. Deselected is programmable either high or 3-state (requires external pullup)

Figure 7-87. SPI Timings—Master Mode (4-Pin and 5-Pin)

Copyright © 2007–2012, Texas Instruments Incorporated

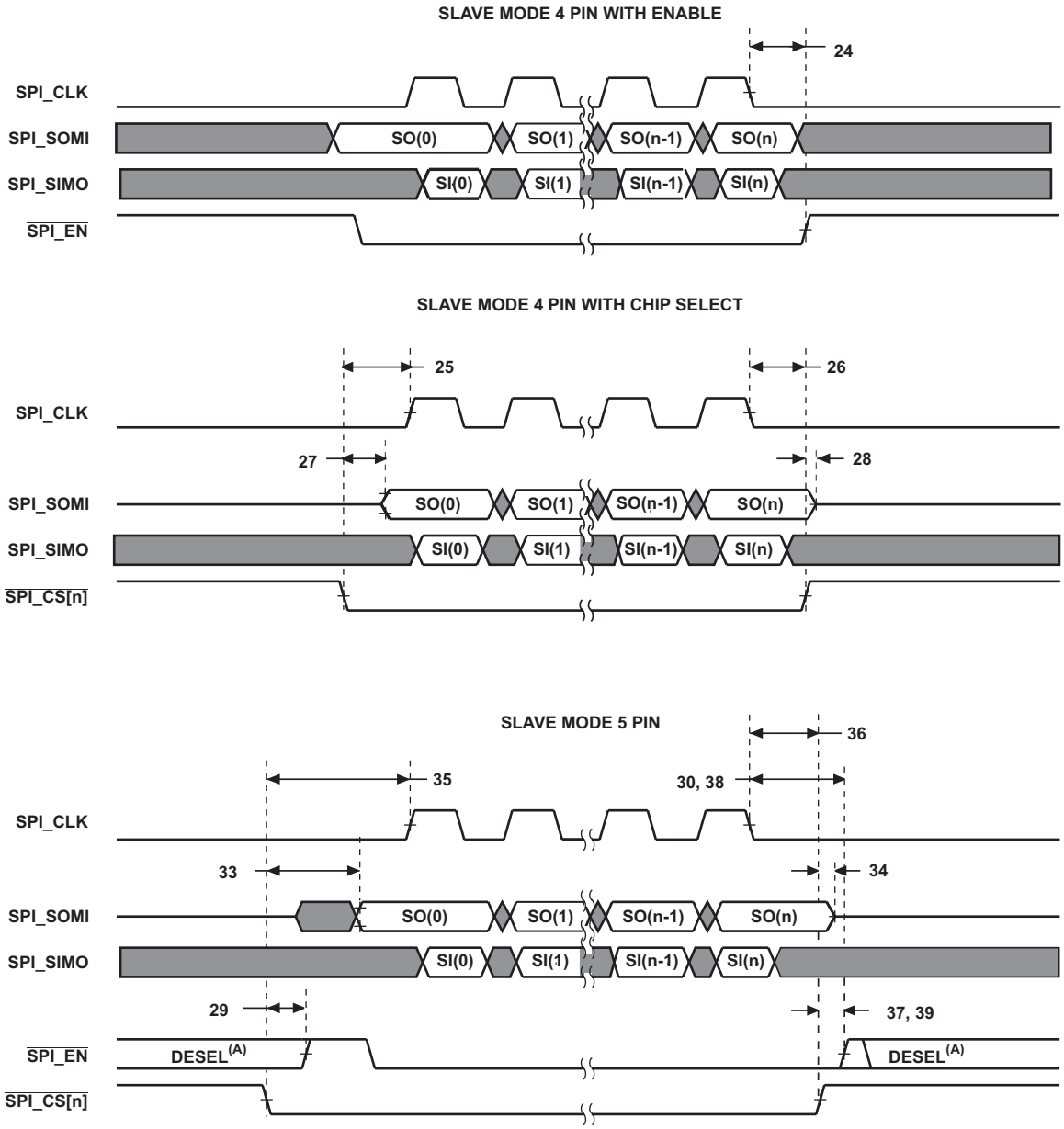

A. Deselected is programmable either high or 3-state (requires external pullup)

Figure 7-88. SPI Timings—Slave Mode (4-Pin and 5-Pin)

7.24 Universal Asynchronouse Receiver/Transmitter (UART)

The UART performs serial-to-parallel conversions on data received from a peripheral device and parallel-to-serial conversion on data received from the CPU.

7.24.1 UART Device-Specific Information

DM6467 provides up to 3 UART peripheral interfaces depending on the selected pin multiplexing.

Each UART has the following features:

- Selectable UART/IrDA (SIR/MIR)/CIR modes
- Dual 64 entry FIFOs for received and transmitted data payload
- Programmable and selectable transmit and receive FIFO trigger levels for DMA and interrupt generation
- Frequency prescaler values from 0 to 16 383 it generate the appropriate baud rates
- Two DMA requests and one interrupt request to the system

UART functions include:

- Baud-rate up to 1.8432 Mbit/s
- Software/Hardware flow control
  - Programmable Xon/Xoff characters
  - Programmable Auto-$\overline{\text{RTS}}$ and Auto-$\overline{\text{CTS}}$
- Programmable serial interfaces characteristics
  - 5, 6, 7, or 8-bit characters
  - Even, odd, mark, space, or no parity bit generation and detection
  - 1, 1.5, or 2 stop bit generation
- Additional Modem control functions ($\overline{\text{UDTR0}}$, $\overline{\text{UDSR0}}$, $\overline{\text{UDCD0}}$, and $\overline{\text{URIN0}}$) [UART0 ***only***]

IR-IrDA functions include:

- Both slow infrared (SIR, baud-rate up to 115.2 Kbit/s) and medium infrared (MIR, baud-rate up to 0.576 Mbits/s) supported
- Supports framing error, cyclic redundancy check (CRC) error, and abort pattern (SIR, MIR) detection
- 8-entry status FIFO (with selectable trigger levels) available to monitor frame length and frame errors

IR-CIR functions include:

- Consumer Infrared (CIR) remote control mode with programmable data encoding

Copyright © 2007–2012, Texas Instruments Incorporated

7.24.2 UART Peripheral Register Description(s)

Table 7-125 shows the UART register name summary. Table 7-126, Table 7-127, and Table 7-128 show the UART0/1/2 registers, respectively along with their configuration requirements.

Table 7-125. UART Register Summary

ACRONYM	REGISTER NAME	ACRONYM	REGISTER NAME
RHR	Receive Holding Register	RXFLH	Receive Frame Length High Register
THR	Transmit Holding Register	BLR	BOF Control Register
IER	Interrupt Enable Register	ACREG	Auxilliary Control Register
IIR	Interrupt Identification Register	SCR	Supplementary Control Register
FCR	FIFO Control Register	SSR	Supplementary Status Register
LCR	Line Control Register	EBLR	BOF Length Register
MCR	Modem Control Register	MVR	Module Version Register
LSR	Line Status Register	SYSC	System Configuration Register
MSR	Modem Status Register	SYSS	System Status Register
SPR	Scratchpad Register	WER	Wake-up Enable Register
TCR	Transmission Control Register	CFPS	Carrier Frequency Prescaler Register
TLR	Trigger Level Register	DLL	Divisor Latch Low Register
MDR1	Mode Definition Register 1	DLH	Divisor Latch High Register
MDR2	Mode Definition Register 2	UASR	UART Autobauding Status Register
SFLSR	Status FIFO Line Status Register	EFR	Enhanced Feature Register
RESUME	Resume Register	XON1	UART XON1 Character Register
SFREGL	Status FIFO Register Low	XON2	UART XON2 Character Register
SFREGH	Status FIFO Register High	XOFF1	UART XOFF1 Character Register
TXFLL	Transmit Frame Length Low Register	XOFF2	UART XOFF2 Character Register
TXFLH	Transmit Frame Length High Register	ADDR1	IrDA Address 1 Register
RXFLL	Receive Frame Length Low Register	ADDR2	IrDA Address 2 Register

Copyright © 2007–2012, Texas Instruments Incorporated

Table 7-126. UART0 – UART/IrDA/CIR Register Program Map

HEX ADDRESS RANGE	REGISTER					
	LCR[7] = 0		LCR[7] = 1 & LCR[7:0] ≠ 0xBF		LCR[7:0] = 0xBF	
	READ	WRITE	READ	WRITE	READ	WRITE
0x01C2 0000	RHR	THR	DLL	DLL	DLL	DLL
0x01C2 0004	IER(1)	IER(1)	DLH	DLH	DLH	DLH
0x01C2 0008	IIR	FCR(2)	IIR	FCR(2)	EFR	EFR
0x01C2 000C	LCR	LCR	LCR	LCR	LCR	LCR
0x01C2 0010	MCR(2)	MCR(2)	MCR(2)	MCR(2)	XON1/ADDR1	XON1/ADDR1
0x01C2 0014	LSR	–	LSR	–	XON2/ADR2	XON2/ADDR2
0x01C2 0018	MSR/TCR(3)	TCR(3)	MSR/TCR(3)	TCR(3)	XOFF1/TCR(3)	XOFF1/TCR(3)
0x01C2 001C	SPR/TLR(3)	SPR/TLR(3)	SPR/TLR(3)	SPR/TLR(3)	XOFF2/TLR(3)	XOFF2/TLR(3)
0x01C2 0020	MDR1	MDR1	MDR1	MDR1	MDR1	MDR1
0x01C2 0024	MDR2	MDR2	MDR2	MDR2	MDR2	MDR2
0x01C2 0028	SFLSR	TXFLL	SFLSR	TXFLL	SFLSR	TXFLL
0x01C2 002C	RESUME	TXFLH	RESUME	TXFLH	RESUME	TXFLH
0x01C2 0030	SFREGL	RXFLL	SFREGL	RXFLL	SFREGL	RXFLL
0x01C2 0034	SFREGH	RXFLH	SFREGH	RXFLH	SFREGH	RXFLH
0x01C2 0038	BLR	BLR	UASR	–	UASR	–
0x01C2 003C	ACREG	ACREG	–	–	–	–
0x01C2 0040	SCR	SCR	SCR	SCR	SCR	SCR
0x01C2 0044	SSR	–	SSR	–	SSR	–
0x01C2 0048	EBLR	EBLR	–	–	–	–
0x01C2 004C	–	–	–	–	–	–
0x01C2 0050	MVR	–	MVR	–	MVR	–
0x01C2 0054	SYSC	SYSC	SYSC	SYSC	SYSC	SYSC
0x01C2 0058	SYSS	–	SYSS	–	SYSS	–
0x01C2 005C	WER	WER	WER	WER	WER	WER
0x01C2 0060	CFPS	CFPS	CFPS	CFPS	CFPS	CFPS
0x01C2 0064 - 0x01C2 007F	–	–	–	–	–	–

(1) In UART modes, IER.[7:4] can only be written when ENHANCED_EN in EFR = 1. In IrDA/CIR modes, ENHANCED_EN in EFR has no impact on the access to IER.[7:4].
(2) MCR.[7:5] and the TX_FIFO_TRIG bits in FCR can only be written to when the ENHANCED_EN bit in EFR = 1.
(3) Transmission control register (TCR) and trigger level register (TLR) are accessible only when the ENHANCED_EN bit in the EFR =1 and the TCR_TLR bit in the MCR = 1.

Copyright © 2007–2012, Texas Instruments Incorporated

Table 7-127. UART1 – UART/IrDA/CIR Register Program Map

HEX ADDRESS RANGE	REGISTER					
	LCR[7] = 0		LCR[7] = 1 & LCR[7:0] ≠ 0xBF		LCR[7:0] = 0xBF	
	READ	WRITE	READ	WRITE	READ	WRITE
0x01C2 0400	RHR	THR	DLL	DLL	DLL	DLL
0x01C2 0404	IER(1)	IER(1)	DLH	DLH	DLH	DLH
0x01C2 0408	IIR	FCR(2)	IIR	FCR(2)	EFR	EFR
0x01C2 040C	LCR	LCR	LCR	LCR	LCR	LCR
0x01C2 0410	MCR(2)	MCR(2)	MCR(2)	MCR(2)	XON1/ADDR1	XON1/ADDR1
0x01C2 0414	LSR	–	LSR	–	XON2/ADR2	XON2/ADDR2
0x01C2 0418	MSR/TCR(3)	TCR(3)	MSR/TCR(3)	TCR(3)	XOFF1/TCR(3)	XOFF1/TCR(3)
0x01C2 041C	SPR/TLR(3)	SPR/TLR(3)	SPR/TLR(3)	SPR/TLR(3)	XOFF2/TLR(3)	XOFF2/TLR(3)
0x01C2 0420	MDR1	MDR1	MDR1	MDR1	MDR1	MDR1
0x01C2 0424	MDR2	MDR2	MDR2	MDR2	MDR2	MDR2
0x01C2 0428	SFLSR	TXFLL	SFLSR	TXFLL	SFLSR	TXFLL
0x01C2 042C	RESUME	TXFLH	RESUME	TXFLH	RESUME	TXFLH
0x01C2 0430	SFREGL	RXFLL	SFREGL	RXFLL	SFREGL	RXFLL
0x01C2 0434	SFREGH	RXFLH	SFREGH	RXFLH	SFREGH	RXFLH
0x01C2 0438	BLR	BLR	UASR	–	UASR	–
0x01C2 043C	ACREG	ACREG	–	–	–	–
0x01C2 0440	SCR	SCR	SCR	SCR	SCR	SCR
0x01C2 0444	SSR	–	SSR	–	SSR	–
0x01C2 0448	EBLR	EBLR	–	–	–	–
0x01C2 044C	–	–	–	–	–	–
0x01C2 0450	MVR	–	MVR	–	MVR	–
0x01C2 0454	SYSC	SYSC	SYSC	SYSC	SYSC	SYSC
0x01C2 0458	SYSS	–	SYSS	–	SYSS	–
0x01C2 045C	WER	WER	WER	WER	WER	WER
0x01C2 0460	CFPS	CFPS	CFPS	CFPS	CFPS	CFPS
0x01C2 0464 - 0x01C2 047F	–	–	–	–	–	–

(1) In UART modes, IER.[7:4] can only be written when ENHANCED_EN in EFR = 1. In IrDA/CIR modes, ENHANCED_EN in EFR has no impact on the access to IER.[7:4].
(2) MCR.[7:5] and the TX_FIFO_TRIG bits in FCR can only be written to when the ENHANCED_EN bit in EFR = 1.
(3) Transmission control register (TCR) and trigger level register (TLR) are accessible only when the ENHANCED_EN bit in the EFR =1 and the TCR_TLR bit in the MCR = 1.

Copyright © 2007–2012, Texas Instruments Incorporated

Table 7-128. UART2 – UART/IrDA/CIR Register Program Map

HEX ADDRESS RANGE	REGISTER					
	LCR[7] = 0		LCR[7] = 1 & LCR[7:0] ≠ 0xBF		LCR[7:0] = 0xBF	
	READ	WRITE	READ	WRITE	READ	WRITE
0x01C2 0800	RHR	THR	DLL	DLL	DLL	DLL
0x01C2 0804	IER(1)	IER(1)	DLH	DLH	DLH	DLH
0x01C2 0808	IIR	FCR(2)	IIR	FCR(2)	EFR	EFR
0x01C2 080C	LCR	LCR	LCR	LCR	LCR	LCR
0x01C2 0810	MCR(2)	MCR(2)	MCR(2)	MCR(2)	XON1/ADDR1	XON1/ADDR1
0x01C2 0814	LSR	–	LSR	–	XON2/ADR2	XON2/ADDR2
0x01C2 0818	MSR/TCR(3)	TCR(3)	MSR/TCR(3)	TCR(3)	XOFF1/TCR(3)	XOFF1/TCR(3)
0x01C2 081C	SPR/TLR(3)	SPR/TLR(3)	SPR/TLR(3)	SPR/TLR(3)	XOFF2/TLR(3)	XOFF2/TLR(3)
0x01C2 0820	MDR1	MDR1	MDR1	MDR1	MDR1	MDR1
0x01C2 0824	MDR2	MDR2	MDR2	MDR2	MDR2	MDR2
0x01C2 0828	SFLSR	TXFLL	SFLSR	TXFLL	SFLSR	TXFLL
0x01C2 082C	RESUME	TXFLH	RESUME	TXFLH	RESUME	TXFLH
0x01C2 0830	SFREGL	RXFLL	SFREGL	RXFLL	SFREGL	RXFLL
0x01C2 0834	SFREGH	RXFLH	SFREGH	RXFLH	SFREGH	RXFLH
0x01C2 0838	BLR	BLR	UASR	–	UASR	–
0x01C2 083C	ACREG	ACREG	–	–	–	–
0x01C2 0840	SCR	SCR	SCR	SCR	SCR	SCR
0x01C2 0844	SSR	–	SSR	–	SSR	–
0x01C2 0848	EBLR	EBLR	–	–	–	–
0x01C2 084C	–	–	–	–	–	–
0x01C2 0850	MVR	–	MVR	–	MVR	–
0x01C2 0854	SYSC	SYSC	SYSC	SYSC	SYSC	SYSC
0x01C2 0858	SYSS	–	SYSS	–	SYSS	–
0x01C2 085C	WER	WER	WER	WER	WER	WER
0x01C2 0860	CFPS	CFPS	CFPS	CFPS	CFPS	CFPS
0x01C2 0864 - 0x01C2 087F	–	–	–	–	–	–

(1) In UART modes, IER.[7:4] can only be written when ENHANCED_EN in EFR = 1. In IrDA/CIR modes, ENHANCED_EN in EFR has no impact on the access to IER.[7:4].
(2) MCR.[7:5] and the TX_FIFO_TRIG bits in FCR can only be written to when the ENHANCED_EN bit in EFR = 1.
(3) Transmission control register (TCR) and trigger level register (TLR) are accessible only when the ENHANCED_EN bit in the EFR =1 and the TCR_TLR bit in the MCR = 1.

Copyright © 2007–2012, Texas Instruments Incorporated

7.24.3 UART Electrical Data/Timing [Receive/Transmit]

Table 7-129. Timing Requirements for UARTx Receive(1) (see Figure 7-89)

NO.			-594, -729		UNIT
			MIN	MAX	
4	$t_{w(URXDB)}$	Pulse duration, receive data bit (URXDx) [15/30/100 pF]	0.96U	1.05U	ns
5	$t_{w(URXSB)}$	Pulse duration, receive start bit [15/30/100 pF]	0.96U	1.05U	ns

(1) U = UART baud time = 1/programmed baud rate.

Table 7-130. Switching Characteristics Over Recommended Operating Conditions for UARTx Transmit(1) (see Figure 7-89)

NO.	PARAMETER		-594, -729		UNIT
			MIN	MAX	
1	$f_{(baud)}$	Maximum programmable baud rate		128	kHz
2	$t_{w(UTXDB)}$	Pulse duration, transmit data bit (UTXDx) [15/30/100 pF]	U - 2	U + 2	ns
3	$t_{w(UTXSB)}$	Pulse duration, transmit start bit [15/30/100 pF]	U - 2	U + 2	ns

(1) U = UART baud time = 1/programmed baud rate.

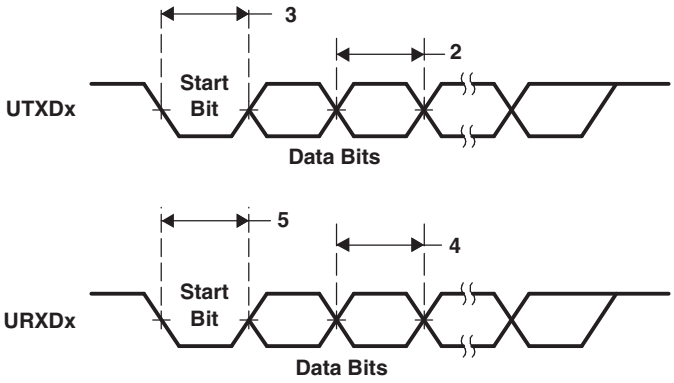

Figure 7-89. UART Transmit/Receive Timing

7.24.4 IrDA Interface Receive/Transmit Timings

Table 7-131. Signaling Rate and Pulse Duration Specification in Receive Mode

SIGNALING RATE	ELECTRICAL PULSE DURATION			UNIT
	MAX	NOM	MIN	
SIR MODE				
2.4 Kbit/s (Kbps)	1.41	78.1	88.55	µs
9.6 Kbps	1.41	19.5	22.13	µs
19.2 Kbps	1.41	9.75	11.07	µs
38.4 Kbps	1.41	4.87	5.96	µs
57.6 Kbps	1.41	3.25	4.34	µs
115.2 Kbps	1.41	1.62	2.23	µs
MIR MODE				
0.576 Mbit/s (Mbps)	297.2	416	518.8	ns

Table 7-132. Timing Requirements for IrDA Receive

NO.			-594, -729		UNIT
			MIN	MAX	
1	$t_{r(URXD)}$	Rise time, receive data bit URXDx		200	ns
2	$t_{f(URXD)}$	Fall time, receive data bit URXDx		200	ns

Table 7-133. Signaling Rate and Pulse Duration Specification in Transmit Mode

SIGNALING RATE	ELECTRICAL PULSE DURATION			UNIT
	MAX	NOM	MIN	
SIR MODE				
2.4 Kbit/s (Kbps)	78.10	78.1	78.10	µs
9.6 Kbps	19.50	19.5	19.50	µs
19.2 Kbps	9.75	9.75	9.75	µs
38.4 Kbps	4.87	4.87	4.87	µs
57.6 Kbps	3.25	3.25	3.25	µs
115.2 Kbps	1.62	1.62	1.62	µs
MIR MODE				
0.576 Mbit/s (Mbps)	414.0	416.0	419.0	ns

Copyright © 2007–2012, Texas Instruments Incorporated

7.25 Inter-Integrated Circuit (I2C)

The inter-integrated circuit (I2C) module provides an interface between DM6467 and other devices compliant with Philips Semiconductors Inter-IC bus (I^2C-bus™) specification version 2.1. External components attached to this 2-wire serial bus can transmit/receive 2 to 8-bit data to/from the DMSoC through the I2C module. The I2C port *does not* support CBUS compatible devices.

The I2C port supports the following features:

- Compatible with Philips I2C Specification Revision 2.1 (January 2000)
- Standard and Fast Modes from 10 – 400 Kbps (no fail-safe I/O buffers)
- Noise Filter to Remove Noise 50 ns or less
- Seven- and Ten-Bit Device Addressing Modes
- Master (Transmit/Receive) and Slave (Transmit/Receive) Functionality
- Events: DMA, Interrupt, or Polling
- Slew-Rate Limited Open-Drain Output Buffers

For more detailed information on the I2C peripheral, see the *TMS320DM646x DMSoC Inter-Integrated Circuit (I2C) Module* User's Guide (literature number SPRUER0).

7.25.1 I2C Peripheral Register Description(s)

Table 7-134. I2C Registers

HEX ADDRESS RANGE	ACRONYM	REGISTER NAME
0x1C2 1000	ICOAR	I2C Own Address Register
0x1C2 1004	ICIMR	I2C Interrupt Mask Register
0x1C2 1008	ICSTR	I2C Interrupt Status Register
0x1C2 100C	ICCLKL	I2C Clock Divider Low Register
0x1C2 1010	ICCLKH	I2C Clock Divider High Register
0x1C2 1014	ICCNT	I2C Data Count Register
0x1C2 1018	ICDRR	I2C Data Receive Register
0x1C2 101C	ICSAR	I2C Slave Address Register
0x1C2 1020	ICDXR	I2C Data Transmit Register
0x1C2 1024	ICMDR	I2C Mode Register
0x1C2 1028	ICIVR	I2C Interrupt Vector Register
0x1C2 102C	ICEMDR	I2C Extended Mode Register
0x1C2 1030	ICPSC	I2C Prescaler Register
0x1C2 1034	ICPID1	I2C Peripheral Identification Register 1
0x1C2 1038	ICPID2	I2C Peripheral Identification Register 2

Copyright © 2007–2012, Texas Instruments Incorporated

7.25.2 I2C Electrical Data/Timing

Table 7-135. Timing Requirements for I2C Timings(1) (see Figure 7-90)

NO.			-594, -729				UNIT
			STANDARD MODE		FAST MODE		
			MIN	MAX	MIN	MAX	
1	$t_{c(SCL)}$	Cycle time, SCL	10		2.5		µs
2	$t_{su(SCLH-SDAL)}$	Setup time, SCL high before SDA low (for a repeated START condition)	4.7		0.6		µs
3	$t_{h(SCLL-SDAL)}$	Hold time, SCL low after SDA low (for a START and a repeated START condition)	4		0.6		µs
4	$t_{w(SCLL)}$	Pulse duration, SCL low	4.7		1.3		µs
5	$t_{w(SCLH)}$	Pulse duration, SCL high	4		0.6		µs
6	$t_{su(SDAV-SCLH)}$	Setup time, SDA valid before SCL high	250		100(2)		ns
7	$t_{h(SDA-SCLL)}$	Hold time, SDA valid after SCL low	0(3)		0(3)	0.9(4)	µs
8	$t_{w(SDAH)}$	Pulse duration, SDA high between STOP and START conditions	4.7		1.3		µs
9	$t_{r(SDA)}$	Rise time, SDA		1000	$20 + 0.1C_b$(5)	300	ns
10	$t_{r(SCL)}$	Rise time, SCL		1000	$20 + 0.1C_b$(5)	300	ns
11	$t_{f(SDA)}$	Fall time, SDA		300	$20 + 0.1C_b$(5)	300	ns
12	$t_{f(SCL)}$	Fall time, SCL		300	$20 + 0.1C_b$(5)	300	ns
13	$t_{su(SCLH-SDAH)}$	Setup time, SCL high before SDA high (for STOP condition)	4		0.6		µs
14	$t_{w(SP)}$	Pulse duration, spike (must be suppressed)			0	50	ns
15	C_b (5)	Capacitive load for each bus line		400		400	pF

(1) The I2C pins SDA and SCL do not feature fail-safe I/O buffers. These pins could potentially draw current when the device is powered down.
(2) A Fast-mode I^2C-bus™ device can be used in a Standard-mode I^2C-bus system, but the requirement $t_{su(SDA-SCLH)} \geq 250$ ns must then be met. This will automatically be the case if the device does not stretch the LOW period of the SCL signal. If such a device does stretch the LOW period of the SCL signal, it must output the next data bit to the SDA line t_r max + $t_{su(SDA-SCLH)}$ = 1000 + 250 = 1250 ns (according to the Standard-mode I^2C-Bus Specification) before the SCL line is released.
(3) A device must internally provide a hold time of at least 300 ns for the SDA signal (referred to the V_{IHmin} of the SCL signal) to bridge the undefined region of the falling edge of SCL.
(4) The maximum $t_{h(SDA-SCLL)}$ has only to be met if the device does not stretch the low period [$t_{w(SCLL)}$] of the SCL signal.
(5) C_b = total capacitance of one bus line in pF. If mixed with HS-mode devices, faster fall-times are allowed.

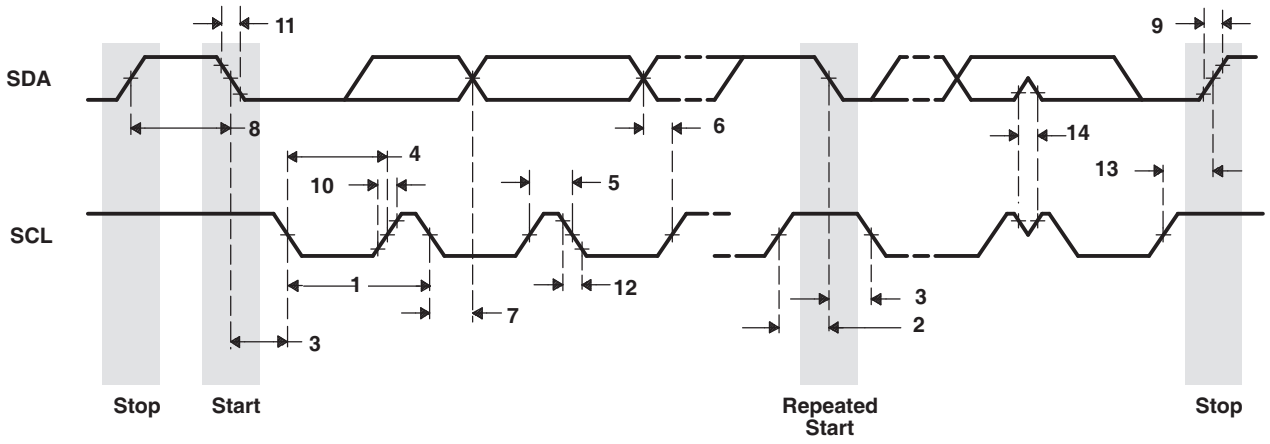

Figure 7-90. I2C Receive Timings

Table 7-136. Switching Characteristics for I2C Timings(1) (see Figure 7-91)

NO.	PARAMETER		-594, -729				UNIT
			STANDARD MODE		FAST MODE		
			MIN	MAX	MIN	MAX	
16	$t_{c(SCL)}$	Cycle time, SCL	10		2.5		µs
17	$t_{d(SCLH-SDAL)}$	Delay time, SCL high to SDA low (for a repeated START condition)	4.7		0.6		µs
18	$t_{d(SDAL-SCLL)}$	Delay time, SDA low to SCL low (for a START and a repeated START condition)	4		0.6		µs
19	$t_{w(SCLL)}$	Pulse duration, SCL low	4.7		1.3		µs
20	$t_{w(SCLH)}$	Pulse duration, SCL high	4		0.6		µs
21	$t_{d(SDAV-SCLH)}$	Delay time, SDA valid to SCL high	250		100		ns
22	$t_{v(SCLL-SDAV)}$	Valid time, SDA valid after SCL low	0		0	0.9	µs
23	$t_{w(SDAH)}$	Pulse duration, SDA high between STOP and START conditions	4.7		1.3		µs
24	$t_{r(SDA)}$	Rise time, SDA		1000	$20 + 0.1C_b$ (2)	300	ns
25	$t_{r(SCL)}$	Rise time, SCL		1000	$20 + 0.1C_b$ (2)	300	ns
26	$t_{f(SDA)}$	Fall time, SDA		300	$20 + 0.1C_b$ (2)	300	ns
27	$t_{f(SCL)}$	Fall time, SCL		300	$20 + 0.1C_b$ (2)	300	ns
28	$t_{d(SCLH-SDAH)}$	Delay time, SCL high to SDA high (for STOP condition)	4		0.6		µs
29	C_p	Capacitance for each I2C pin		10		10	pF

(1) C_b = total capacitance of one bus line in pF. If mixed with HS-mode devices, faster fall-times are allowed.
(2) C_b = total capacitance of one bus line in pF. If mixed with HS-mode devices, faster fall-times are allowed.

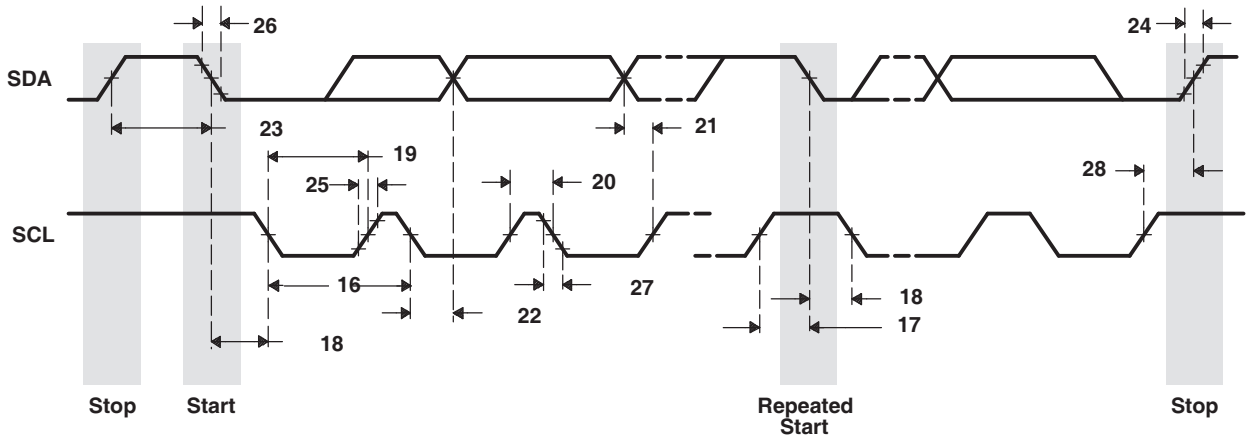

Figure 7-91. I2C Transmit Timings

Copyright © 2007–2012, Texas Instruments Incorporated

7.26 Pulse Width Modulator (PWM)

The PWM provides a way to generate a pulse periodic waveform for motor control or can act as a digital-to-analog converter with some external components.

7.26.1 PWM Device-Specific Information

The 2 DM6467 Pulse Width Modulator (PWM) peripherals support the following features:

- 32-bit period counter
- 32-bit first-phase duration counter
- 32-bit repeat count for one-shot operation. One-shot operation generates N+1 periods of waveform, N being the repeat count register value.
- Configurable to operate in either one-shot or continuous mode
- Programmable buffered period and first-phase duration registers
- One-shot operation triggerable by VPIF or GPIO with programmable edge transitions. (low-to-high or high-to-low).
- One-shot operation generates N+1 periods of waveform, N being the repeat count register value
- Configurable PWM output pin inactive state
- Interrupt and EDMA synchronization events
- Emulation support for stop or free-run operation

7.26.2 PWM Peripheral Register Description(s)

Table 7-137 and Table 7-138 show the register memory maps for PWM0/1.

Table 7-137. PWM0 Register

HEX ADDRESS RANGE	ACRONYM	REGISTER NAME
0x01C2 2000	PID	PWM0 Peripheral Identification Register
0x01C2 2004	PCR	PWM0 Peripheral Control Register
0x01C2 2008	CFG	PWM0 Configuration Register
0x01C2 200C	START	PWM0 Start Register
0x01C2 2010	RPT	PWM0 Repeat Count Register
0x01C2 2014	PER	PWM0 Period Register
0x01C2 2018	PH1D	PWM0 First-Phase Duration Register
0x01C2 201C - 0x01C2 23FF	-	Reserved

Table 7-138. PWM1 Register Memory Map

HEX ADDRESS RANGE	ACRONYM	REGISTER NAME
0x01C2 2400	PID	PWM1 Peripheral Identification Register
0x01C2 2404	PCR	PWM1 Peripheral Control Register
0x01C2 2408	CFG	PWM1 Configuration Register
0x01C2 240C	START	PWM1 Start Register
0x01C2 2410	RPT	PWM1 Repeat Count Register
0x01C2 2414	PER	PWM1 Period Register
0x01C2 2418	PH1D	PWM1 First-Phase Duration Register
0x01C2 241C -0x01C2 27FF	-	Reserved

Copyright © 2007–2012, Texas Instruments Incorporated

7.26.3 PWM0/1 Electrical Data/Timing

Table 7-139. Switching Characteristics Over Recommended Operating Conditions for PWM0/1 Outputs[1] (see Figure 7-92 and Figure 7-93)

NO.	PARAMETER		-594, -729		UNIT
			MIN	MAX	
1	$t_{w(PWMH)}$	Pulse duration, PWMx high	37		ns
2	$t_{w(PWML)}$	Pulse duration, PWMx low	37		ns
3	$t_{t(PWM)}$	Transition time, PWMx		5	ns
4	$t_{d(VPIF-PWMV)}$	Delay time, VPIF (VSYNC) or GPIO trigger event to PWMx valid	4P	6P + 20	ns

(1) P = SYSCLK3 period in ns.

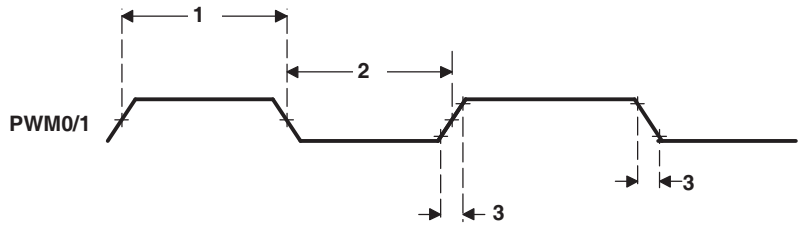

Figure 7-92. PWM Output Timing

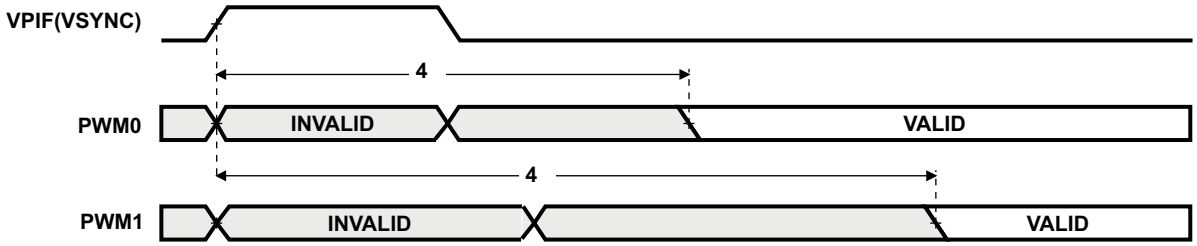

Figure 7-93. PWM Output Delay Timing

Copyright © 2007–2012, Texas Instruments Incorporated

7.27 Timers

The timers support four modes of operation: a 64-bit general-purpose (GP) timer, dual-unchained 32-bit GP timers, dual-chained 32-bit timers, or a watchdog timer. The GP timer mode can be used to generate periodic interrupts or EDMA synchronization events. The watchdog timer mode is used to provide a recovery mechanism for the device in the event of a fault condition, such as a non-exiting code loop.

7.27.1 Timers Device-Specific Information

The DM6467 device has 3 64-bit general-purpose timers which have the following features:

- 64-bit count-up counter
- Timer modes:
  - 64-bit general-purpose timer mode (Timer 0 and 1)
  - Dual 32-bit general-purpose timer mode (Timer 0 and 1)
  - Watchdog timer mode (Timer 2) [mainly controlled by the ARM]
- 2 possible clock sources:
  - Internal clock
  - External clock input via timer input pin TINP0U, TINP0L, and TINP1L, (Timer 0 and 1 only)
- 2 operation modes:
  - One-time operation (timer runs for one period then stops)
  - Continuous operation (timer automatically resets after each period)
- Generates interrupts to the DSP and the ARM CPUs
- Generates sync event to EDMA
- Causes device global reset upon watchdog timer timeout (Timer 2 only)

For more detailed information, see the *TMS320DM646x DMSoC 64-Bit Timer* User's Guide (literature number SPRUER5).

7.27.2 Timer Peripheral Register Description(s)

Table 7-140, Table 7-141, and Table 7-142 show the registers for Timer 0, Timer 1, and Timer 2 (Watchdog).

Table 7-140. Timer 0 Registers

HEX ADDRESS RANGE	ACRONYM	DESCRIPTION
0x01C2 1400	PID12	Timer 0 Peripheral Identification Register 12
0x01C2 1404	EMUMGT	Timer 0 Emulation Management
0x01C2 1410	TIM12	Timer 0 Counter Register 12
0x01C2 1414	TIM34	Timer 0 Counter Register 34
0x01C2 1418	PRD12	Timer 0 Period Register 12
0x01C2 141C	PRD34	Timer 0 Period Register 34
0x01C2 1420	TCR	Timer 0 Control Register
0x01C2 1424	TGCR	Timer 0 Global Control Register
0x01C2 1428 - 0x01C2 17FF	-	Reserved

Copyright © 2007–2012, Texas Instruments Incorporated

Table 7-141. Timer 1 Registers

HEX ADDRESS RANGE	ACRONYM	DESCRIPTION
0x01C2 1800	PID12	Timer 1 Peripheral Identification Register 12
0x01C2 1804	EMUMGT	Timer 1 Emulation Management
0x01C2 1810	TIM12	Timer 1 Counter Register 12
0x01C2 1814	TIM34	Timer 1 Counter Register 34
0x01C2 1818	PRD12	Timer 1 Period Register 12
0x01C2 181C	PRD34	Timer 1 Period Register 34
0x01C2 1820	TCR	Timer 1 Control Register
0x01C2 1824	TGCR	Timer 1 Global Control Register
0x01C2 1828 - 0x01C2 1BFF	-	Reserved

Table 7-142. Timer 2 (Watchdog) Registers

HEX ADDRESS RANGE	ACRONYM	DESCRIPTION
0x01C2 1C00	PID12	Timer 2 Peripheral Identification Register 12
0x01C2 1C04	EMUMGT	Timer 2 Emulation Management
0x01C2 1C10	TIM12	Timer 2 Counter Register 12
0x01C2 1C14	TIM34	Timer 2 Counter Register 34
0x01C2 1C18	PRD12	Timer 2 Period Register 12
0x01C2 1C1C	PRD34	Timer 2 Period Register 34
0x01C2 1C20	TCR	Timer 2 Control Register
0x01C2 1C24	TGCR	Timer 2 Global Control Register
0x01C2 1C28	WDTCR	Timer 2 Watchdog Timer Control Register
0x01C2 1C2C - 0x01C2 1FFF	-	Reserved

Copyright © 2007–2012, Texas Instruments Incorporated

7.27.3 Timer Electrical Data/Timing

Table 7-143. Timing Requirements for Timer Input[1] (see Figure 7-94)

NO.			-594, -729		UNIT
			MIN	MAX	
1	$t_{w(TINPH)}$	Pulse duration, TINPxL/TINP0U high	2P		ns
2	$t_{w(TINPL)}$	Pulse duration, TINPxL/TINP0U low	2P		ns

(1) P = DEV_MXI/DEV_CLKIN cycle time in ns. For example, when DEV_MXI/DEV_CLKIN frequency is 27 MHz, use P = 37.0$\overline{37}$ ns.

Table 7-144. Switching Characteristics Over Recommended Operating Conditions for Timer Output[1] (see Figure 7-94)

NO.			-594, -729		UNIT
			MIN	MAX	
3	$t_{w(TOUTH)}$	Pulse duration, TOUTxL/TOUTxU/TOUT2 high	P		ns
4	$t_{w(TOUTL)}$	Pulse duration, TOUTxL/TOUTxU/TOUT2 low	P		ns

(1) P = DEV_MXI/DEV_CLKIN cycle time in ns. For example, when DEV_MXI/DEV_CLKIN frequency is 27 MHz, use P = 37.0$\overline{37}$ ns.

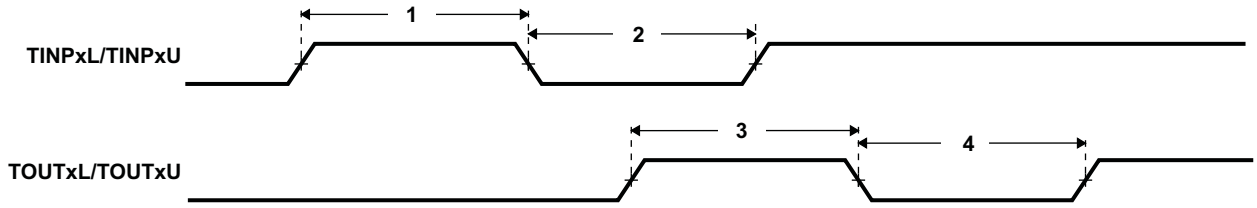

Figure 7-94. Timer Timing

7.28 General-Purpose Input/Output (GPIO)

The GPIO peripheral provides general-purpose pins that can be configured as either inputs or outputs. When configured as an output, a write to an internal register can control the state driven on the output pin. When configured as an input, the state of the input is detectable by reading the state of an internal register. In addition, the GPIO peripheral can produce CPU interrupts and EDMA events in different interrupt/event generation modes. The GPIO peripheral provides generic connections to external devices. The GPIO pins are grouped into banks of 16 pins per bank (i.e., bank 0 consists of GP[0:15]).

7.28.1 GPIO Device-Specific Information

The DM6467 GPIO peripheral supports the following:

- Up to 33 3.3-V GPIO pins, GP[0:47; not all pinned out]
- Interrupts:
  - Up to 8 unique GP[0:7] interrupts from Bank 0
  - 3 GPIO bank (aggregated) interrupt signals from each of the 3 banks of GPIOs
  - Interrupts can be triggered by rising and/or falling edge, specified for each interrupt capable GPIO signal
- DMA events:
  - Up to 8 unique GPIO DMA events from Bank 0
  - 3 GPIO bank (aggregated) DMA event signals from each of the 3 banks of GPIOs
- Set/clear functionality: Software writes 1 to corresponding bit position(s) to set or to clear GPIO signal(s). This allows multiple software processes to toggle GPIO output signals without critical section protection (disable interrupts, program GPIO, re-enable interrupts, to prevent context switching to anther process during GPIO programming).
- Separate Input/Output registers
- Output register in addition to set/clear so that, if preferred by software, some GPIO output signals can be toggled by direct write to the output register(s).
- Output register, when read, reflects output drive status. This, in addition to the input register reflecting pin status and open-drain I/O cell, allows wired logic be implemented.

Although, the DM6467 device implements three GPIO banks, not all GPIOs from all banks are available externally (pinned out). The following GPIOs are ***not*** pinned out on the DM6467 device:

- **BANK 0**
  - GP[9]
  - GP[14]
  - GP[15]
- **BANK 1**
  - GP[27:31]
- **BANK 2**
- GP[34]
- GP[35]
- GP[43:47]

For more detailed information on GPIOs, see the *TMS320DM646x DMSoC General-Purpose Input/Output (GPIO)* User's Guide (literature number SPRUEQ8).

Copyright © 2007–2012, Texas Instruments Incorporated

7.28.2 GPIO Peripheral Register Description(s)

Table 7-145 shows the GPIO peripheral registers.

Table 7-145. GPIO Registers

HEX ADDRESS RANGE	ACRONYM	REGISTER NAME
0x01C6 7000	PID	Peripheral Identification Register
0x01C6 7004	-	Reserved
0x01C6 7008	BINTEN	GPIO interrupt per-bank enable
GPIO Banks 0 and 1		
0x01C6 700C	-	Reserved
0x01C6 7010	DIR01	GPIO Banks 0 and 1 Direction Register (GP[0:31])
0x01C6 7014	OUT_DATA01	GPIO Banks 0 and 1 Output Data Register (GP[0:31])
0x01C6 7018	SET_DATA01	GPIO Banks 0 and 1 Set Data Register (GP[0:31])
0x01C6 701C	CLR_DATA01	GPIO Banks 0 and 1 Clear data for banks 0 and 1 (GP[0:31])
0x01C6 7020	IN_DATA01	GPIO Banks 0 and 1 Input Data Register (GP[0:31])
0x01C6 7024	SET_RIS_TRIG01	GPIO Banks 0 and 1 Set Rising Edge Interrupt Register (GP[0:31])
0x01C6 7028	CLR_RIS_TRIG01	GPIO Banks 0 and 1 Clear Rising Edge Interrupt Register (GP[0:31])
0x01C6 702C	SET_FAL_TRIG01	GPIO Banks 0 and 1 Set Falling Edge Interrupt Register (GP[0:31])
0x01C6 7030	CLR_FAL_TRIG01	GPIO Banks 0 and 1 Clear Falling Edge Interrupt Register (GP[0:31])
0x01C6 7034	INSTAT01	GPIO Banks 0 and 1 Interrupt Status Register (GP[0:31])
GPIO Bank 2		
0x01C6 7038	DIR2	GPIO Bank 2 Direction Register (GP[32:47])
0x01C6 703C	OUT_DATA2	GPIO Bank 2 Output Data Register (GP[32:47])
0x01C6 7040	SET_DATA2	GPIO Bank 2 Set Data Register (GP[32:47])
0x01C6 7044	CLR_DATA2	GPIO Bank 2 Clear Data Register (GP[32:47])
0x01C6 7048	IN_DATA2	GPIO Bank 2 Input Data Register (GP[32:47])
0x01C6 704C	SET_RIS_TRIG2	GPIO Bank 2 Set Rising Edge Interrupt Register (GP[32:47])
0x01C6 7050	CLR_RIS_TRIG2	GPIO Bank 2 Clear Rising Edge Interrupt Register (GP[32:47])
0x01C6 7054	SET_FAL_TRIG2	GPIO Bank 2 Set Falling Edge Interrupt Register (GP[32:47])
0x01C6 7058	CLR_FAL_TRIG2	GPIO Bank 2 Clear Falling Edge Interrupt Register (GP[32:47])
0x01C6 705C	INSTAT2	GPIO Bank 2 Interrupt Status Register (GP[32:47])
0x01C6 7060 - 0x01C6 77FF	-	Reserved

Copyright © 2007–2012, Texas Instruments Incorporated

7.28.3 GPIO Peripheral Input/Output Electrical Data/Timing

Table 7-146. Timing Requirements for GPIO Inputs(1) (see Figure 7-95)

NO.			-594, -729		UNIT
			MIN	MAX	
1	$t_{w(GPIH)}$	Pulse duration, GP[x] input high	2C(2)		ns
2	$t_{w(GPIL)}$	Pulse duration, GP[x] input low	2C(2)		ns

(1) The pulse width given is sufficient to generate a CPU interrupt or an EDMA event. However, if a user wants to have DM6467 recognize the GP[x] input changes through software polling of the GPIO register, the GP[x] input duration must be extended to allow DM6467 enough time to access the GPIO register through the internal bus.
(2) C = SYSCLK3 period in ns. For example, when running parts at 594 MHz, use C = 6.7 ns.

Table 7-147. Switching Characteristics Over Recommended Operating Conditions for GPIO Outputs (see Figure 7-95)

NO.	PARAMETER		-594, -729		UNIT
			MIN	MAX	
3	$t_{w(GPOH)}$	Pulse duration, GP[x] output high	C(1) (2)		ns
4	$t_{w(GPOL)}$	Pulse duration, GP[x] output low	C(1) (2)		ns

(1) This parameter value should not be used as a maximum performance specification. Actual performance of back-to-back accesses of the GPIO is dependent upon internal bus activity.
(2) C = SYSCLK3 period in ns. For example, when running parts at 594 MHz, use C = 6.7 ns.

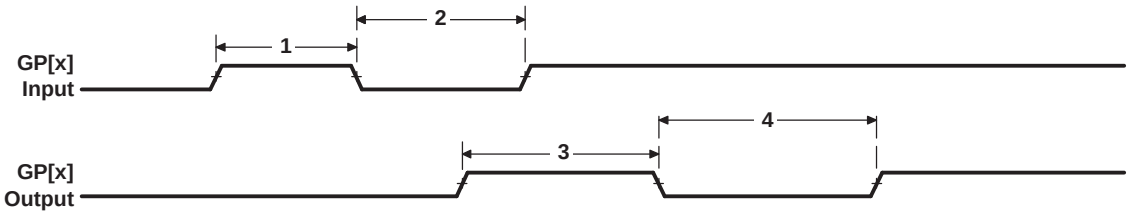

Figure 7-95. GPIO Port Timing

Copyright © 2007–2012, Texas Instruments Incorporated

7.29 IEEE 1149.1 JTAG

The JTAG (3) interface is used for BSDL testing and emulation of the DM6467 device.

$\overline{\text{TRST}}$ only needs to be released when it is necessary to use a JTAG controller to debug the device or exercise the device's boundary scan functionality.

$\overline{\text{RESET}}$ must be released only in order for boundary-scan JTAG to read the variant field of IDCODE correctly. Other boundary-scan instructions work correctly independent of current state of $\overline{\text{RESET}}$.

DM6467 includes an internal pulldown (IPD) on the $\overline{\text{TRST}}$ pin to ensure that $\overline{\text{TRST}}$ will always be asserted upon power up and the device's internal emulation logic will always be properly initialized.

JTAG controllers from Texas Instruments actively drive $\overline{\text{TRST}}$ high. However, some third-party JTAG controllers may not drive $\overline{\text{TRST}}$ high but expect the use of a pullup resistor on $\overline{\text{TRST}}$. When using this type of JTAG controller, assert $\overline{\text{TRST}}$ to initialize the device after powerup and externally drive $\overline{\text{TRST}}$ high before attempting any emulation or boundary scan operations.

7.29.1 JTAG ID (JTAGID) Register Description(s)

Table 7-148. JTAG ID Register

HEX ADDRESS RANGE	ACRONYM	REGISTER NAME	COMMENTS
0x01C4 0028	JTAGID	JTAG Identification Register	Read-only. Provides 32-bit JTAG ID of the device.

(3) IEEE Standard 1149.1-1990 Standard-Test-Access Port and Boundary Scan Architecture.

The JTAG ID register is a read-only register that identifies to the customer the JTAG/Device ID. For the DM6467 device, the JTAG ID register resides at address location 0x01C4 0028. The register hex value for DM6467 is: 0x**1**B77 002F [for Silicon Revision 3.0 and later] and 0x**0**B77 002F [for Silicon Revision 1.1 and earlier]. For the actual register bit names and their associated bit field descriptions, see Figure 7-96 and Table 7-149.

31-28	27-12	11-1	0
VARIANT (4-Bit)	PART NUMBER (16-Bit)	MANUFACTURER (11-Bit)	LSB
R-000**X**	R-1011 0111 0111 0000	R-0000 0010 111	R-1

LEGEND: R = Read, W = Write, n = value at reset, **X** = Silicon Revision dependent

Figure 7-96. JTAG ID Register Description - DM6467 Register Value - 0xXB77 002F

Copyright © 2007–2012, Texas Instruments Incorporated

Table 7-149. JTAG ID Register Selection Bit Descriptions

BIT	NAME	DESCRIPTION
31:28	VARIANT	Variant (4-Bit) value. DM6467 value: **0000** [Silicon Revision 1.1 and earlier] and **0001** [Silicon Revision 3.0 and later].
27:12	PART NUMBER	Part Number (16-Bit) value. DM6467 value: 1011 0111 0111 0000.
11-1	MANUFACTURER	Manufacturer (11-Bit) value. DM6467 value: 0000 0010 111.
0	LSB	LSB. This bit is read as a "1" for DM6467.

7.29.2 JTAG Test-Port Electrical Data/Timing

Table 7-150. Timing Requirements for JTAG Test Port(1) (2) (see Figure 7-97)

NO.			-594, -729		UNIT
			MIN	MAX	
1	$t_{c(TCK)}$	Cycle time, TCK	20		ns
2	$t_{w(TCKH)}$	Pulse duration, TCK high	0.4T		ns
3	$t_{w(TCKL)}$	Pulse duration, TCK low	0.4T		ns
4	$t_{c(RTCK)}$	Cycle time, RTCK	20		ns
5	$t_{w(RTCKH)}$	Pulse duration, RTCK high	0.4R		ns
6	$t_{w(RTCKL)}$	Pulse duration, RTCK low	0.4R		ns
7	$t_{su(TDIV-RTCKH)}$	Setup time, TDI/TMS/$\overline{TRST}$ valid before RTCK high	12		ns
8	$t_{h(RTCKH-TDIV)}$	Hold time, TDI/TMS/$\overline{TRST}$ valid after RTCK high	0		ns
9	$t_{su(EMUV-TCKH)}$	Setup time, EMU[1:0] valid before TCK high	1.5		ns
10	$t_{h(TCKH-EMUV)}$	Hold time, EMU[1:0] valid after TCK high	4		ns

(1) T = TCK cycle time in ns. For example, when TCK frequency is 20 MHz, use T = 50 ns.
(2) R = RTCLK cycle time in ns. For example, when RTCK frequency is 20 MHz, use T = 50 ns.

Table 7-151. Switching Characteristics Over Recommended Operating Conditions for JTAG Test Port(1) (see Figure 7-97)

NO.	PARAMETER		-594, -729		UNIT
			MIN	MAX	
11	$t_{d(RTCKL-TDOV)}$	Delay time, RTCK low to TDO valid	-1	8	ns
12	$t_{d(TCKH-EMUV)}$	Delay time, TCK high to EMU[1:0] valid	2.5	T - 2.5	ns

(1) T = TCK cycle time in ns. For example, when TCK frequency is 20 MHz, use T = 50 ns.

Copyright © 2007–2012, Texas Instruments Incorporated

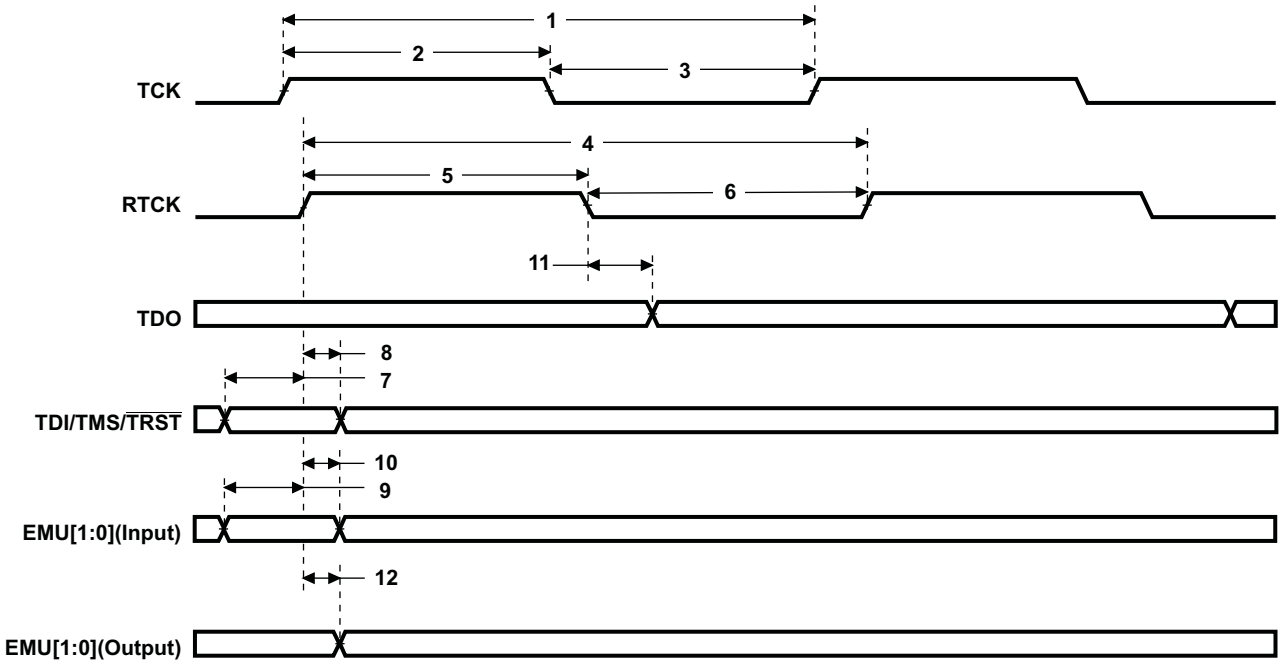

Figure 7-97. JTAG Test-Port Timing

8 Mechanical Packaging and Orderable Information

The following table(s) show the thermal resistance characteristics for the PBGA–CUT mechanical package.

8.1 Thermal Data for CUT

Table 8-1. Thermal Resistance Characteristics (PBGA Package) [CUT]

NO.			°C/W(1)	AIR FLOW (m/s)(2)
1	$R\Theta_{JC}$	Junction-to-case	1.5	N/A
2	$R\Theta_{JB}$	Junction-to-board	9.9	N/A
3	$R\Theta_{JA}$	Junction-to-free air	19.2	0.00
4	$R\Theta_{JMA}$	Junction-to-moving air	14.8	0.50
5			13.8	1.00
6			12.7	2.00
7			11.9	3.00
8	Psi_{JT}	Junction-to-package top	0.3	0.00
9			0.4	0.50
10			0.4	1.00
11			0.4	2.00
12			0.5	3.00
13	Psi_{JB}	Junction-to-board	9.0	0.00
14			8.0	0.50
15			7.7	1.00
16			7.3	2.00
17			7.0	3.00

(1) These measurements were conducted in a JEDEC defined 2S2P system and will change based on environment as well as application. For more information, see these EIA/JEDEC standards – EIA/JESD51-2, *Integrated Circuits Thermal Test Method Environment Conditions - Natural Convection (Still Air)* and JESD51-7, *High Effective Thermal Conductivity Test Board for Leaded Surface Mount Packages*.

(2) m/s = meters per second

8.2 Packaging Information

The following packaging information and addendum reflect the most current data available for the designated device(s). This data is subject to change without notice and without revision of this document.

Copyright © 2007–2012, Texas Instruments Incorporated

PACKAGING INFORMATION

Orderable Device	Status (1)	Package Type	Package Drawing	Pins	Package Qty	Eco Plan (2)	Lead finish/ Ball material (6)	MSL Peak Temp (3)	Op Temp (°C)	Device Marking (4/5)	Samples
TMS320DM6467CCUT	ACTIVE	FCBGA	CUT	529	84	RoHS & Green	Call TI	Level-4-245C-72HR	0 to 85	TMS320 DM6467CCUT	Samples
TMS320DM6467CCUT4	ACTIVE	FCBGA	CUT	529	84	RoHS & Green	Call TI	Level-4-245C-72HR	0 to 85	TMS320 DM6467CCUT4	Samples
TMS320DM6467CCUT6	ACTIVE	FCBGA	CUT	529	84	RoHS & Green	Call TI	Level-4-245C-72HR		TMS320 DM6467CCUT6	Samples
TMS320DM6467CCUT7	ACTIVE	FCBGA	CUT	529	84	RoHS & Green	Call TI	Level-4-245C-72HR	0 to 85	TMS320 DM6467CCUT7	Samples
TMS320DM6467CCUTA	ACTIVE	FCBGA	CUT	529	84	RoHS & Green	Call TI	Level-4-245C-72HR		TMS320 DM6467CCUTA	Samples
TMS320DM6467CCUTA6	ACTIVE	FCBGA	CUT	529	84	RoHS & Green	Call TI	Level-4-245C-72HR		TMS320 DM6467CCUTA6	Samples
TMS320DM6467CCUTAV	ACTIVE	FCBGA	CUT	529	84	RoHS & Green	Call TI	Level-4-245C-72HR	-40 to 105	TMS320 DM6467CUTAVH	Samples
TMS320DM6467CCUTD7	ACTIVE	FCBGA	CUT	529	84	RoHS & Green	Call TI	Level-4-245C-72HR	-40 to 85	TMS320 DM6467CCUTD7	Samples
TMS320DM6467CCUTV	ACTIVE	FCBGA	CUT	529	84	RoHS & Green	Call TI	Level-4-245C-72HR	0 to 85	TMS320 DM6467CCUTVH	Samples
TMS320DM6467CCUTV6	ACTIVE	FCBGA	CUT	529	84	RoHS & Green	Call TI	Level-4-245C-72HR		TMS320 DM6467CCUTV6H	Samples
TMS32DM6467CCUTAV6	ACTIVE	FCBGA	CUT	529	84	RoHS & Green	Call TI	Level-4-245C-72HR	-40 to 105	TMS320 DM6467CCUTAV6H	Samples
TMSDM6467CCUT7TAN	ACTIVE	FCBGA	CUT	529	84	RoHS & Green	Call TI	Level-4-245C-72HR	0 to 85	TMS320 DM6467CCUT7	Samples
VCBUP7TC6	ACTIVE	FCBGA	CUT	529	84	RoHS & Green	Call TI	Level-4-245C-72HR		TMS320 DM6467CCUT6	Samples

(1) The marketing status values are defined as follows:
ACTIVE: Product device recommended for new designs.
LIFEBUY: TI has announced that the device will be discontinued, and a lifetime-buy period is in effect.
NRND: Not recommended for new designs. Device is in production to support existing customers, but TI does not recommend using this part in a new design.
PREVIEW: Device has been announced but is not in production. Samples may or may not be available.
OBSOLETE: TI has discontinued the production of the device.

(2) **RoHS:** TI defines "RoHS" to mean semiconductor products that are compliant with the current EU RoHS requirements for all 10 RoHS substances, including the requirement that RoHS substance do not exceed 0.1% by weight in homogeneous materials. Where designed to be soldered at high temperatures, "RoHS" products are suitable for use in specified lead-free processes. TI may reference these types of products as "Pb-Free".
RoHS Exempt: TI defines "RoHS Exempt" to mean products that contain lead but are compliant with EU RoHS pursuant to a specific EU RoHS exemption.
Green: TI defines "Green" to mean the content of Chlorine (Cl) and Bromine (Br) based flame retardants meet JS709B low halogen requirements of <=1000ppm threshold. Antimony trioxide based flame retardants must also meet the <=1000ppm threshold requirement.

(3) MSL, Peak Temp. - The Moisture Sensitivity Level rating according to the JEDEC industry standard classifications, and peak solder temperature.

(4) There may be additional marking, which relates to the logo, the lot trace code information, or the environmental category on the device.

(5) Multiple Device Markings will be inside parentheses. Only one Device Marking contained in parentheses and separated by a "~" will appear on a device. If a line is indented then it is a continuation of the previous line and the two combined represent the entire Device Marking for that device.

(6) Lead finish/Ball material - Orderable Devices may have multiple material finish options. Finish options are separated by a vertical ruled line. Lead finish/Ball material values may wrap to two lines if the finish value exceeds the maximum column width.

Important Information and Disclaimer: The information provided on this page represents TI's knowledge and belief as of the date that it is provided. TI bases its knowledge and belief on information provided by third parties, and makes no representation or warranty as to the accuracy of such information. Efforts are underway to better integrate information from third parties. TI has taken and continues to take reasonable steps to provide representative and accurate information but may not have conducted destructive testing or chemical analysis on incoming materials and chemicals. TI and TI suppliers consider certain information to be proprietary, and thus CAS numbers and other limited information may not be available for release.

In no event shall TI's liability arising out of such information exceed the total purchase price of the TI part(s) at issue in this document sold by TI to Customer on an annual basis.

TRAY

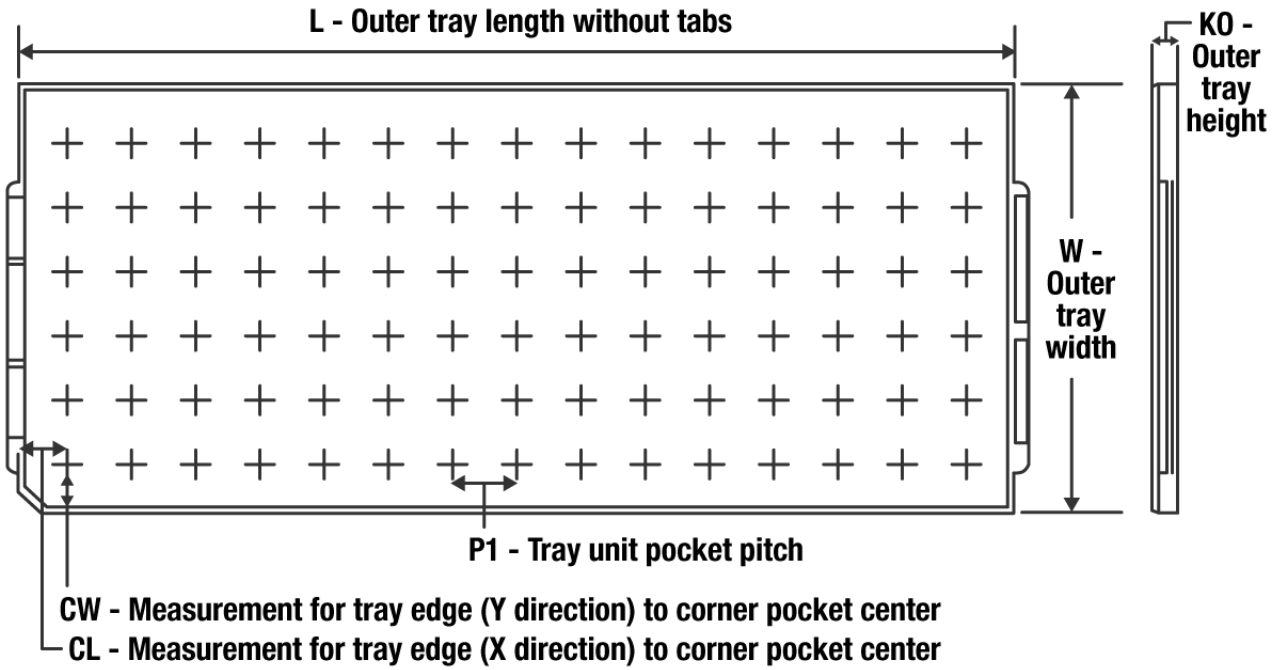

Chamfer on Tray corner indicates Pin 1 orientation of packed units.

*All dimensions are nominal

Device	Package Name	Package Type	Pins	SPQ	Unit array matrix	Max temperature (°C)	L (mm)	W (mm)	K0 (µm)	P1 (mm)	CL (mm)	CW (mm)
TMS320DM6467CCUT	CUT	FCBGA	529	84	6X14	150	315	135.9	7620	21.34	18.79	14.6
TMS320DM6467CCUT4	CUT	FCBGA	529	84	6X14	150	315	135.9	7620	21.34	18.79	14.6
TMS320DM6467CCUT6	CUT	FCBGA	529	84	6X14	150	315	135.9	7620	21.34	18.79	14.6
TMS320DM6467CCUT7	CUT	FCBGA	529	84	6X14	150	315	135.9	7620	21.34	18.79	14.6
TMS320DM6467CCUTA	CUT	FCBGA	529	84	6X14	150	315	135.9	7620	21.34	18.79	14.6
TMS320DM6467CCUTA6	CUT	FCBGA	529	84	6X14	150	315	135.9	7620	21.34	18.79	14.6
TMS320DM6467CCUTAV	CUT	FCBGA	529	84	6X14	150	315	135.9	7620	21.34	18.79	14.6
TMS320DM6467CCUTD7	CUT	FCBGA	529	84	6X14	150	315	135.9	7620	21.34	18.79	14.6
TMS320DM6467CCUTV6	CUT	FCBGA	529	84	6X14	150	315	135.9	7620	21.34	18.79	14.6
TMS32DM6467CCUTAV6	CUT	FCBGA	529	84	6X14	150	315	135.9	7620	21.34	18.79	14.6
TMSDM6467CCUT7TAN	CUT	FCBGA	529	84	6X14	150	315	135.9	7620	21.34	18.79	14.6
VCBUP7TC6	CUT	FCBGA	529	84	6X14	150	315	135.9	7620	21.34	18.79	14.6

CUT (S–PBGA–N529) PLASTIC BALL GRID ARRAY

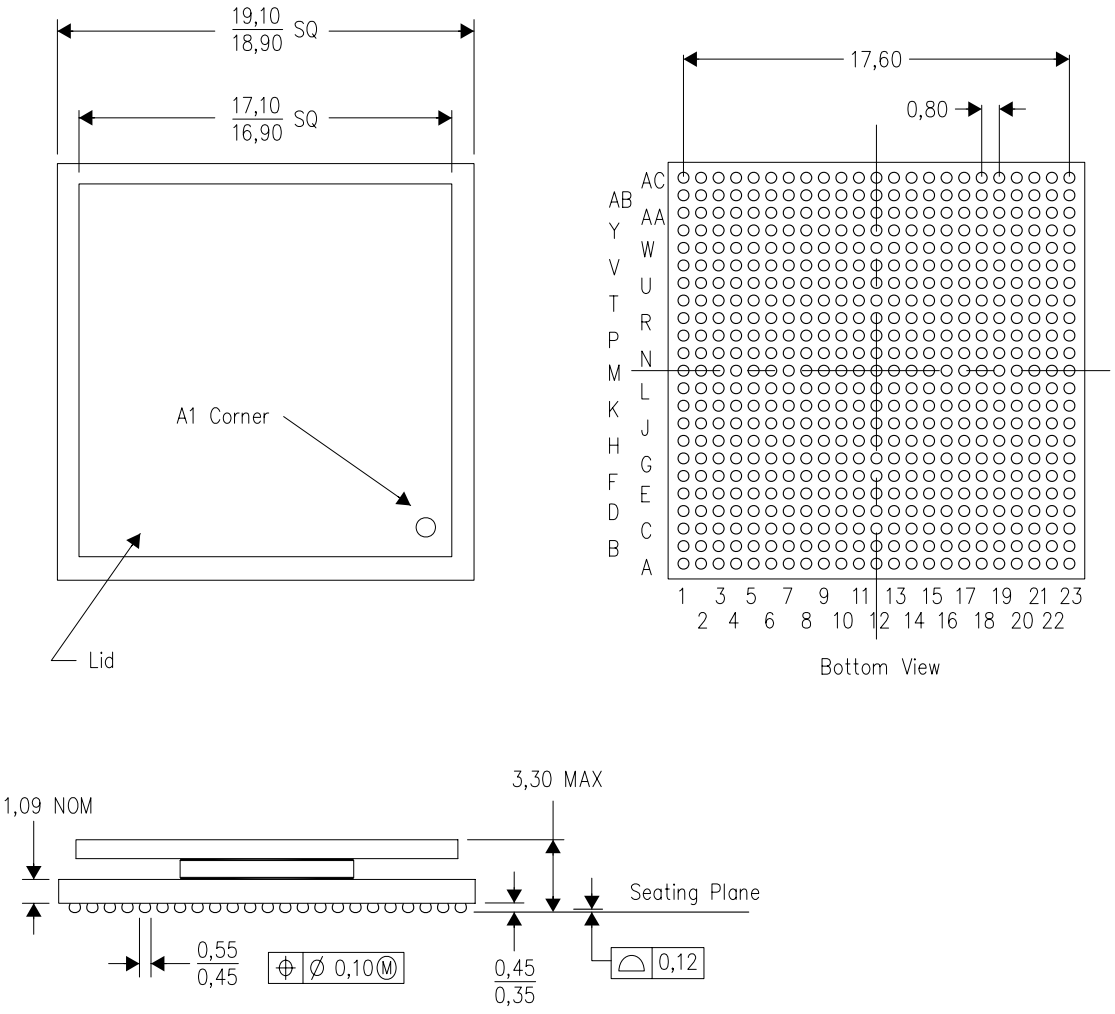

4207942/C 02/10

NOTES:
A. All linear dimensions are in millimeters. Dimensioning and tolerancing per ASME Y14.5M–1994.
B. This drawing is subject to change without notice.
C. Thermally enhanced package with lid.
D. Flip chip application only.
E. Pb–free die bump and solder ball.

IMPORTANT NOTICE AND DISCLAIMER

TI PROVIDES TECHNICAL AND RELIABILITY DATA (INCLUDING DATA SHEETS), DESIGN RESOURCES (INCLUDING REFERENCE DESIGNS), APPLICATION OR OTHER DESIGN ADVICE, WEB TOOLS, SAFETY INFORMATION, AND OTHER RESOURCES “AS IS” AND WITH ALL FAULTS, AND DISCLAIMS ALL WARRANTIES, EXPRESS AND IMPLIED, INCLUDING WITHOUT LIMITATION ANY IMPLIED WARRANTIES OF MERCHANTABILITY, FITNESS FOR A PARTICULAR PURPOSE OR NON-INFRINGEMENT OF THIRD PARTY INTELLECTUAL PROPERTY RIGHTS.

These resources are intended for skilled developers designing with TI products. You are solely responsible for (1) selecting the appropriate TI products for your application, (2) designing, validating and testing your application, and (3) ensuring your application meets applicable standards, and any other safety, security, regulatory or other requirements.

These resources are subject to change without notice. TI grants you permission to use these resources only for development of an application that uses the TI products described in the resource. Other reproduction and display of these resources is prohibited. No license is granted to any other TI intellectual property right or to any third party intellectual property right. TI disclaims responsibility for, and you will fully indemnify TI and its representatives against, any claims, damages, costs, losses, and liabilities arising out of your use of these resources.

TI’s products are provided subject to TI’s Terms of Sale or other applicable terms available either on ti.com or provided in conjunction with such TI products. TI’s provision of these resources does not expand or otherwise alter TI’s applicable warranties or warranty disclaimers for TI products.

TI objects to and rejects any additional or different terms you may have proposed.

Mailing Address: Texas Instruments, Post Office Box 655303, Dallas, Texas 75265
Copyright © 2022, Texas Instruments Incorporated