# TMS320F2837xD 双核微控制器

## 1 器件概述

### 1.1 特性

- 双核架构
  - 两个 TMS320C28x 32 位 CPU
  - 200MHz
  - IEEE 754 单精度浮点单元 (FPU)
  - 三角法数学单元 (TMU)
  - Viterbi/复杂数学单元 (VCU-II)
- 两个可编程控制律加速器 (CLA)
  - 200MHz
  - IEEE 754 单精度浮点单元指令
  - 独立于主 CPU 执行代码
- 片上存储器
  - 512KB (256KW) 或 1MB (512KW) 闪存（ECC 保护）
  - 172KB (86KW) 或 204KB (102KW) RAM（ECC 保护或奇偶校验保护）
  - 支持第三方开发的双区安全
  - 唯一标识号
- 时钟和系统控制
  - 两个内部零引脚 10MHz 振荡器
  - 片上晶体振荡器
  - 窗口化看门狗计时器模块
  - 丢失时钟检测电路
- 1.2V 内核、3.3V I/O 设计
- 系统外设
  - 两个支持 ASRAM 和 SDRAM 的外部存储器接口 (EMIF)
  - 两个 6 通道直接存储器存取 (DMA) 控制器
  - 多达 169 个具有输入滤波功能的独立可编程、多路复用通用输入/输出 (GPIO) 引脚
  - 扩展外设中断控制器 (ePIE)
  - 支持多个具有外部唤醒功能的低功耗模式 (LPM)
- 通信外设
  - USB 2.0 (MAC + PHY)
  - 支持 12 引脚 3.3V 兼容通用并行端口 (uPP) 接口
  - 两个控制器局域网 (CAN) 模块（引脚可引导）
  - 三个高速（高达 50MHz）SPI 端口（引脚可引导）
  - 两个多通道缓冲串行端口 (McBSP)
  - 四个串行通信接口 (SCI/UART)（引脚可引导）
  - 两个 I2C 接口（引脚可引导）
- 模拟子系统
  - 多达四个模数转换器 (ADC)
    - 16 位模式
      - 每个转换器的吞吐量为 1.1MSPS（系统吞吐量高达 4.4MSPS）
      - 差分输入
      - 多达 12 个外部通道
    - 12 位模式
      - 每个通道的吞吐量为 3.5MSPS（系统吞吐量高达 14MSPS）
      - 单端输入
      - 多达 24 个外部通道
    - 每个 ADC 上有一个采样保持 (S/H) 电路
    - ADC 转换的硬件集成后处理
      - 饱和失调电压校准
      - 设定点计算误差
      - 具有中断功能的高、低和过零比较
      - 触发至采样延迟捕捉
  - 八个具有 12 位数模转换器 (DAC) 参考的窗口比较器
  - 三个 12 位缓冲 DAC 输出
- 增强型控制外设
  - 24 个具有增强功能的脉宽调制器 (PWM) 通道
  - 16 个高分辨率脉宽调制器 (HRPWM) 通道
    - 8 个 PWM 模块的 A、B 通道均具有高分辨率
    - 死区支持（对于标准和高分辨率均支持）
  - 6 个增强型捕捉 (eCAP) 模块
  - 3 个增强型正交编码器脉冲 (eQEP) 模块
  - 8 个 Δ-Σ 滤波器模块 (SDFM) 输入通道，每通道有 2 个并联滤波器
    - 标准 SDFM 数据滤波
    - 用于快速响应超范围情况的比较器滤波器

本文档旨在为方便起见，提供有关 TI 产品中文版本的信息，以确认产品的概要。 有关适用的官方英文版本的最新信息，请访问 www.ti.com，其内容始终优先。 TI 不保证翻译的准确性和有效性。 在实际设计之前，请务必参考最新版本的英文版本。

- 可配置逻辑块 (CLB)
  - 增强现有外设功能
  - 支持位置管理器解决方案
- 符合功能安全标准
  - 文档有助于使功能安全系统设计符合 ASIL-D/SIL-3、IEC 60730 C 类和 UL 1998 2 类标准
  - 组件符合 ASIL-B/SIL-2 级标准
- 封装选项：
  - 无铅，绿色环保封装
  - 337 球全新细间距球栅阵列 (nFBGA) [后缀 ZWT]
  - 176 引脚 PowerPAD™耐热增强型薄型四方扁平封装 (HLQFP) [PTP 后缀]
  - 100 引脚 PowerPAD 耐热增强型薄型四方扁平封装 (HTQFP) [PZP 后缀]
- 温度选项：
  - T：–40ºC 至 105ºC 结温
  - S：-40ºC 至 125ºC 结温
  - Q：–40ºC 至 125ºC 自然通风温度（符合面向汽车 应用的 AEC Q100 标准）

## 1.2 应用

- 中距离/短距离雷达
- 牵引逆变器电机控制
- HVAC 大型商用电机控制
- 自动分拣设备
- CNC 控制
- 交流充电（桩）站
- 直流充电（桩）站
- 电动汽车充电站电源模块
- 能量存储电源转换系统 (PCS)
- 中央逆变器
- 太阳能电源优化器
- 串式逆变器
- 逆变器和电机控制
- 板载充电器 (OBC) 和无线充电器
- 线性电机分段控制器
- 伺服驱动器控制模块
- 交流输入 BLDC 电机驱动器
- 直流输入 BLDC 电机驱动器
- 工业交流/直流转换器
- 三相 UPS

## 1.3 说明

C2000™ 32 位微控制器在处理、传感和驱动方面进行了优化，可提高实时控制 应用中的闭环性能，例如工业电机驱动、光伏逆变器和数字电源、电动车辆与运输、电机控制以及传感和信号处理。C2000 系列包括高级性能 MCU 和入门级性能 MCU。

TMS320F2837xD 是一款功能强大的 32 位浮点微控制器单元 (MCU)，专用于高级闭环控制 应用 ，例如工业电机驱动、光伏逆变器和数字电源、电动车辆与运输以及感应和信号处理。要加速应用开发，适用于 C2000 MCU 的 DigitalPower 软件开发套件 (SDK) 和适用于 C2000™ MCU 的 MotorControl 软件开发套件 (SDK) 均可使用。F2837xD 支持新型双核 C28x 架构，显著提升了系统性能。同时集成有模拟和控制外设，允许设计人员整合控制架构，消除了在高端系统中使用多处理器的需求。

双实时控制子系统基于 TI 的 32 位 C28x 浮点 CPU，每个内核中可提供 200MHz 的信号处理性能。C28x CPU 的性能通过新型 TMU 加速器和 VCU 加速器得到了进一步提升，TMU 加速器可快速执行包含变换和转矩环路计算中常见的三角运算的算法；VCU 加速器可缩短编码应用中常见的复杂数学运算的 时间。

F2837xD 微控制器系列 具有 两个 CLA 实时控制协处理器。CLA 是一款独立的 32 位浮点处理器，运行速度与主 CPU 相同。该 CLA 会对外设触发器作出响应，并与主 C28x CPU 同时执行代码。这种并行处理功能可有效加倍实时控制系统的计算性能。通过利用 CLA 执行时间关键型功能，主 C28x CPU 可以得到释放，以便用于执行通信和诊断等其他任务。双 C28x+CLA 架构可在各种系统任务之间实现智能分区。例如，一个 C28x+CLA 内核可用于跟踪速度和位置，而另一个 C28x+CLA 内核则可用于控制转矩和电流环路。

TMS320F2837xD 支持高达 1MB (512KW) 的板载闪存（含纠错码 (ECC)）以及高达 204KB (102KW) 的 SRAM。每个 CPU 上还提供两个 128 位安全区，以实现代码保护。

F2837xD MCU 上还集成了性能模拟和控制外设，进一步实现系统整合。四个独立的 16 位 ADC 可准确、高效地管理多个模拟信号，从而最终提高系统吞吐量。新型 Σ-Δ 滤波器模块 (SDFM) 与 Σ-Δ 调制器配合使用可实现隔离分流测量。包含窗口比较器的比较器子系统 (CMPSS) 可在超过或未满足电流限制条件的情况下保护功率级。其他模拟和控制外设包括 DAC、PWM、eCAPs、eQEP 以及其他外设。


版权 © 2013–2020, Texas Instruments Incorporated

EMIF、CAN 模块（符合 ISO 11898-1/CAN 2.0B 标准）等外设以及新型 uPP 接口扩展了 F2837xD 的连接功能。uPP 接口是 C2000™MCU 的一个新特性，支持与 FPGA 之间或与具有类似 uPP 接口的其他处理器之间的高速并行连接。最后，具有 MAC 和 PHY 的 USB 2.0 端口使用户能够轻松地将通用串行总线 (USB) 连接功能添加到其应用中。

如需详细了解 C2000 MCU，请访问“C2000 概述”，地址为 www.ti.com/c2000。

器件信息 (1)

| 器件型号 | 封装 | 封装尺寸 |
|---|---|---|
| TMS320F28379DZWT | nFBGA (337) | 16.0mm × 16.0mm |
| TMS320F28377DZWT | nFBGA (337) | 16.0mm × 16.0mm |
| TMS320F28376DZWT | nFBGA (337) | 16.0mm × 16.0mm |
| TMS320F28375DZWT | nFBGA (337) | 16.0mm × 16.0mm |
| TMS320F28374DZWT | nFBGA (337) | 16.0mm × 16.0mm |
| TMS320F28379DPTP | HLQFP (176) | 24.0mm × 24.0mm |
| TMS320F28378DPTP | HLQFP (176) | 24.0mm × 24.0mm |
| TMS320F28377DPTP | HLQFP (176) | 24.0mm × 24.0mm |
| TMS320F28376DPTP | HLQFP (176) | 24.0mm × 24.0mm |
| TMS320F28375DPTP | HLQFP (176) | 24.0mm × 24.0mm |
| TMS320F28374DPTP | HLQFP (176) | 24.0mm × 24.0mm |
| TMS320F28375DPZP | HTQFP (100) | 14.0mm × 14.0mm |

(1) 有关这些器件的更多信息，请参阅机械、封装和可订购信息。

## 1.4 功能方框图

图 1-1 显示了 CPU 系统及相关外设。

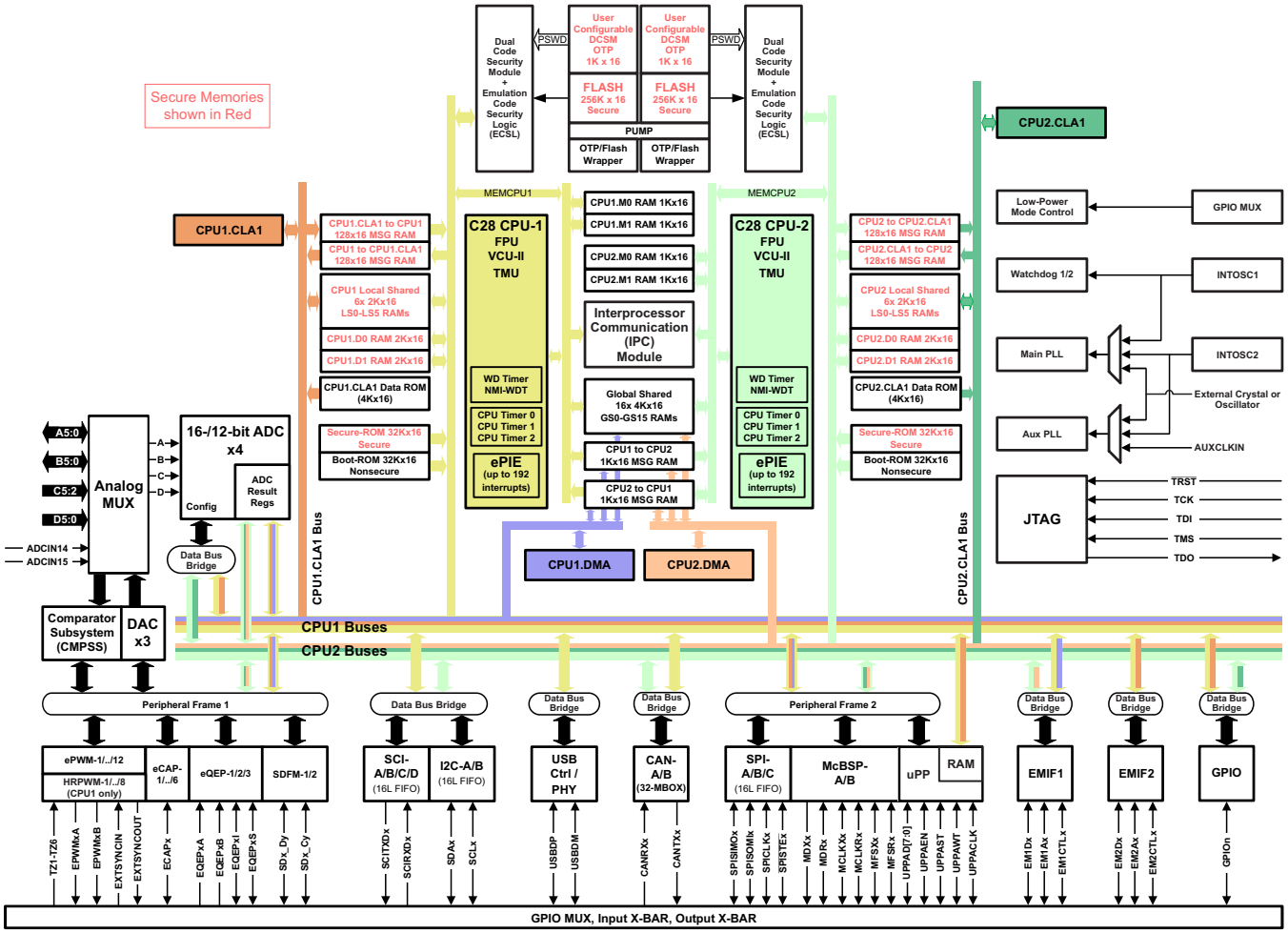


图 **1-1.** 功能方框图


版权 © 2013–2020, Texas Instruments Incorporated

# 内容

**1 器件概述 ..... 1**
1.1 特性 ..... 1
1.2 应用 ..... 2
1.3 说明 ..... 2
1.4 功能方框图 ..... 4
**2 修订历史记录 ..... 6**
**3 Device Comparison ..... 8**
3.1 Related Products ..... 10
**4 Terminal Configuration and Functions ..... 11**
4.1 Pin Diagrams ..... 11
4.2 Signal Descriptions ..... 18
4.3 Pins With Internal Pullup and Pulldown ..... 41
4.4 Pin Multiplexing ..... 42
4.5 Connections for Unused Pins ..... 49
**5 Specifications ..... 50**
5.1 Absolute Maximum Ratings ..... 50
5.2 ESD Ratings – Commercial ..... 51
5.3 ESD Ratings – Automotive ..... 51
5.4 Recommended Operating Conditions ..... 52
5.5 Power Consumption Summary ..... 53
5.6 Electrical Characteristics ..... 57
5.7 Thermal Resistance Characteristics ..... 58
5.8 Thermal Design Considerations ..... 59
5.9 System ..... 60
5.10 Analog Peripherals ..... 96
5.11 Control Peripherals ..... 126
5.12 Communications Peripherals ..... 144
**6 Detailed Description ..... 177**
6.1 Overview ..... 177
6.2 Functional Block Diagram ..... 177
6.3 Memory ..... 179
6.4 Identification ..... 187
6.5 Bus Architecture – Peripheral Connectivity ..... 188
6.6 C28x Processor ..... 189
6.7 Control Law Accelerator ..... 192
6.8 Direct Memory Access ..... 193
6.9 Interprocessor Communication Module ..... 195
6.10 Boot ROM and Peripheral Booting ..... 196
6.11 Dual Code Security Module ..... 199
6.12 Timers ..... 200
6.13 Nonmaskable Interrupt With Watchdog Timer (NMIWD) ..... 200
6.14 Watchdog ..... 201
6.15 Configurable Logic Block (CLB) ..... 202
6.16 Functional Safety ..... 204
**7 Applications, Implementation, and Layout ..... 206**
7.1 TI Reference Design ..... 206
**8 器件和文档支持 ..... 207**
8.1 器件和开发支持工具命名规则 ..... 207
8.2 标记 ..... 208
8.3 工具和软件 ..... 209
8.4 文档支持 ..... 211
8.5 相关链接 ..... 212
8.6 Support Resources ..... 212
8.7 商标 ..... 212
8.8 静电放电警告 ..... 212
8.9 Glossary ..... 212
**9 机械、封装和可订购信息 ..... 213**
9.1 封装信息 ..... 213

# 2 修订历史记录

**Changes from November 16, 2018 to March 2, 2020 (from K Revision (November 2018) to L Revision) Page**

- 节 1.1 （特性）：添加了“符合功能安全标准”特性 ..... 1
- 节 1.2 （应用）：更新了该部分。 ..... 2
- 节 1.3 （说明）：更新了该部分。 ..... 2
- 图 1-1 （功能方框图）：将 MRXx 更改为 MDRx ..... 4
- Table 3-1 (Device Comparison): Added number of CLB tiles. ..... 8
- Table 3-1: Changed availability of TMS320F28379D (PTP) in "Q" temperature range to "Yes". ..... 8
- Section 5.1 (Absolute Maximum Ratings): Changed "Input clamp current" condition from "Digital input (per pin), ..." to "Digital/analog input (per pin), ...". ..... 50
- Section 5.1: Added footnote about continuous clamp current. ..... 50
- Section 5.2 (ESD Ratings – Commercial): Added ANSI/ESDA/JEDEC JS-002 to charged-device model (CDM) ..... 51
- Section 5.5.2 (Reducing Current Consumption): Updated list of methods for reducing the device current consumption. ..... 56
- Section 5.6 (Electrical Characteristics): Added $V_{DDIO\text{-}POR}$ parameter. ..... 57
- Section 5.9.1.5 (Supply Supervision): Added NOTE. ..... 60
- 表 5-7 (Input Clock Frequency): Updated $f_{(X1)}$. ..... 65
- 节 5.9.5 (Emulation/JTAG): Changed "emulator" to "debug probe". ..... 71
- Table 5-38 (EMIF Asynchronous Memory Switching Characteristics): Updated Parameter 3 [$t_{c(EMRCYCLE)}$] and Parameter 15 [$t_{c(EMWCYCLE)}$]. ..... 89
- 节 5.10 (Analog Peripheral): Updated feature about buffered DACs. ..... 96
- 图 5-29 (Analog Subsystem Block Diagram (100-Pin PZP)): Updated ADC-A and ADC-B blocks by changing "16-bits or 12-bits (selectable)" to "12-bits". ..... 99
- 节 5.10.1.2 (ADC Electrical Data and Timing): Added NOTE about keeping $V_{REFHI}$ pin below $V_{DDA}$ + 0.3 V to ensure proper functional operation. ..... 104
- 表 5-51 (ADC Timings in 12-Bit Mode (SYSCLK Cycles)): Added footnote. ..... 111
- 表 5-52 (ADC Timings in 16-Bit Mode): Added footnote. ..... 113
- Table 5-54 (Comparator Electrical Characteristics): Updated description of "Power-up time" parameter. ..... 118
- Table 5-54: Changed MAX Power-up time from 10 µs to 500 µs. Added footnote referencing the "Analog Bandgap References" advisory. ..... 118
- Table 5-54: Added TEST CONDITION for "Input referred offset error". ..... 118
- Table 5-54: Added Common Mode Rejection Ratio (CMRR). ..... 118
- Table 5-55 (CMPSS DAC Static Electrical Characteristics): Added footnote about maximum output voltage. ..... 120
- 节 5.10.3 (Buffered Digital-to-Analog Converter (DAC)): Updated section. ..... 122
- 图 5-44 (DAC Module Block Diagram): Updated figure. ..... 122
- 节 5.10.3.1 (Buffered DAC Electrical Data and Timing): Added NOTE about keeping $V_{REFHI}$ pin below $V_{DDA}$ + 0.3 V to ensure proper functional operation. ..... 123
- Table 5-56 (Buffered DAC Electrical Characteristics): Updated description of "Power-up time" parameter. ..... 123
- Table 5-56: Changed MAX Power-up time from 10 µs to 500 µs. Added footnote referencing the "Analog Bandgap References" advisory. ..... 123
- Table 5-56: Changed "Trimmed offset error" to "Offset error". ..... 123
- Table 5-56: Added TYP DNL value. ..... 123
- Table 5-56: Added TYP INL value. ..... 123
- Table 5-56: Changed description of $R_{PD}$ to "$R_{PD}$ pulldown resistor". ..... 123
- Table 5-56: Changed "Reference load" to "Reference input resistance". ..... 123
- Table 5-56: Updated footnote about typical values. ..... 123
- Table 5-59 (ePWM Timing Requirements): Added $f_{(EPWM)}$ and associated footnote. ..... 133
- Table 5-65 (High-Resolution PWM Timing Requirements): Added table. ..... 138
- 节 5.11.5.2 (SDFM Electrical Data and Timing (Using 3-Sample GPIO Input Qualification)): Updated NOTE about the SDFM Qualified GPIO (3-sample) mode. ..... 143
- 节 5.12.3.1.2 (McBSP as SPI Master or Slave Timing): Updated section. ..... 154
- 图 5-65 (McBSP Timing as SPI Master or Slave: CLKSTP = 10b, CLKXP = 0): Updated M28. Added M26. ..... 157
- 图 5-66 (McBSP Timing as SPI Master or Slave: CLKSTP = 11b, CLKXP = 0): Added M36. ..... 157
- 图 5-67 (McBSP Timing as SPI Master or Slave: CLKSTP = 10b, CLKXP = 1): Updated M47. Added M45. ..... 158
- 图 5-69 (SCI Block Diagram): Updated figure. ..... 160
- 节 5.12.5.1 (SPI Electrical Data and Timing): Updated section. ..... 164
- Table 5-77 (SPI Master Mode Timing Requirements): Updated table. ..... 164
- Table 5-78 (SPI Master Mode Switching Characteristics (Clock Phase = 0)): Updated table. ..... 164


版权 © 2013–2020, Texas Instruments Incorporated

- Table 5-79 (SPI Master Mode Switching Characteristics (Clock Phase = 1)): Updated table. ..... 164
- Table 5-80 (SPI Slave Mode Timing Requirements): Updated table. ..... 168
- Table 5-81 (SPI Slave Mode Switching Characteristics): Updated table. ..... 168
- 图 5-75 (USB Block Diagram): Removed "USB PHY" label and left arrow that were above "USB FS/LS PHY". .... 170
- 图 6-1 (Functional Block Diagram): Changed MRXx to MDRx. ..... 178
- 表 6-1 (C28x Memory Map): Updated CLA ACCESS for UPP TX MSG RAM and UPP RX MSG RAM..... 179
- 节 6.3.2 (Flash Memory Map): Updated Addresses of Flash Sectors on CPU1 and CPU2 for F28379D, F28378D, F28377D and F28375D table. ..... 180
- 节 6.3.2: Updated Addresses of Flash Sectors on CPU1 and CPU2 for F28376D and F28374D table. ..... 180
- 节 6.10.1 (EMU Boot or Emulation Boot): Updated section. ..... 197
- 表 6-15 (GPIO Pins Used by Each Peripheral Bootloader): Updated pin associations for GPIO28 and GPIO29. ... 198
- 节 6.15 (Configurable Logic Block (CLB)): Updated section. ..... 202
- 图 6-6 (CLB Overview): Updated figure. ..... 203
- 节 6.16 (Functional Safety): Added section. ..... 204
- 节 7.1 (TI Reference Design): Changed section title from "TI Design or Reference Design" to "TI Reference Design". Updated section. ..... 206
- 节 8 （器件和文档支持）：将“社区资源”部分更改为“支持资源”部分更新了该部分..... 207
- 节 8.3 （工具和软件）：更新了该部分。 ..... 209

# 3 Device Comparison

Table 3-1 lists the features of each 2837xD device.

**Table 3-1. Device Comparison**

| FEATURE[(1)] | | 28379D | | 28378D | 28377D | | 28376D | | 28375D | | | 28374D | |
|---|---|---|---|---|---|---|---|---|---|---|---|---|---|
| **Package Type (ZWT is an nFBGA package. PTP is an HLQFP package. PZP is an HTQFP package.)** | | **337-Ball ZWT** | **176-Pin PTP** | **176-Pin PTP** | **337-Ball ZWT** | **176-Pin PTP** | **337-Ball ZWT** | **176-Pin PTP** | **337-Ball ZWT** | **176-Pin PTP** | **100-Pin PZP** | **337-Ball ZWT** | **176-Pin PTP** |
| **Processor and Accelerators** | | | | | | | | | | | | | |
| C28x | Number | 2 | | | | | | | | | | | |
| | Frequency (MHz) | 200 | | | | | | | | | | | |
| | Floating-Point Unit (FPU) | Yes | | | | | | | | | | | |
| | VCU-II | Yes | | | | | | | | | | | |
| | TMU – Type 0 | Yes | | | | | | | | | | | |
| CLA – Type 1 | Number | 2 | | | | | | | | | | | |
| | Frequency (MHz) | 200 | | | | | | | | | | | |
| 6-Channel DMA – Type 0 | | 2 | | | | | | | | | | | |
| **Memory** | | | | | | | | | | | | | |
| Flash (16-bit words) | | 1MB (512KW) [512KB (256KW) per CPU] | | 1MB (512KW) [512KB (256KW) per CPU] | 1MB (512KW) [512KB (256KW) per CPU] | | 512KB (256KW) [256KB (128KW) per CPU] | | 1MB (512KW) [512KB (256KW) per CPU] | | | 512KB (256KW) [256KB (128KW) per CPU] | |
| RAM (16-bit words) | Dedicated and Local Shared RAM | 72KB (36KW) [36KB (18KW) per CPU] | | | | | | | | | | | |
| | Global Shared RAM | 128KB (64KW) | | 128KB (64KW) | 128KB (64KW) | | 96KB (48KW) | | 128KB (64KW) | | | 96KB (48KW) | |
| | Message RAM | 4KB (2KW) [2KB (1KW) per CPU] | | | | | | | | | | | |
| | **Total RAM** | **204KB (102KW)** | | **204KB (102KW)** | **204KB (102KW)** | | **172KB (86KW)** | | **204KB (102KW)** | | | **172KB (86KW)** | |
| Code security for on-chip flash, RAM, and OTP blocks | | Yes | | | | | | | | | | | |
| Boot ROM | | Yes | | | | | | | | | | | |
| **System** | | | | | | | | | | | | | |
| Configurable Logic Block (CLB) | | 4 tiles | | | No | | | | | | | | |
| 32-bit CPU timers | | 6 (3 per CPU) | | | | | | | | | | | |
| Watchdog timers | | 2 (1 per CPU) | | | | | | | | | | | |
| Nonmaskable Interrupt Watchdog (NMIWD) timers | | 2 (1 per CPU) | | | | | | | | | | | |
| Crystal oscillator/External clock input | | 1 | | | | | | | | | | | |
| 0-pin internal oscillator | | 2 | | | | | | | | | | | |
| I/O pins (shared) | GPIO | 169 | 97 | 97 | 169 | 97 | 169 | 97 | 169 | 97 | 41 | 169 | 97 |
| External interrupts | | 5 | | | | | | | | | | | |
| EMIF | EMIF1 (16-bit or 32-bit) | 1 | | | | | | | 1 | | – | 1 | |
| | EMIF2 (16-bit) | 1 | – | – | 1 | – | 1 | – | 1 | – | – | 1 | – |

(1) A type change represents a major functional feature difference in a peripheral module. Within a peripheral type, there may be minor differences between devices that do not affect the basic functionality of the module. For more information, see the *C2000 Real-Time Control Peripherals Reference Guide*.


Copyright © 2013–2020, Texas Instruments Incorporated

## Table 3-1. Device Comparison (continued)

| FEATURE[1] | | 28379D | | 28378D | 28377D | | 28376D | | 28375D | | | 28374D | |
|---|---|---|---|---|---|---|---|---|---|---|---|---|---|
| **Package Type (ZWT is an nFBGA package. PTP is an HLQFP package. PZP is an HTQFP package.)** | | **337-Ball ZWT** | **176-Pin PTP** | **176-Pin PTP** | **337-Ball ZWT** | **176-Pin PTP** | **337-Ball ZWT** | **176-Pin PTP** | **337-Ball ZWT** | **176-Pin PTP** | **100-Pin PZP** | **337-Ball ZWT** | **176-Pin PTP** |
| **Analog Peripherals** | | | | | | | | | | | | | |
| ADC 16-bit mode | MSPS | 1.1 | | – | 1.1 | | | | – | | | | |
| | Conversion Time (ns)[2] | 915 | | – | 915 | | | | – | | | | |
| | Input pins | 24 | 20 | – | 24 | 20 | 24 | 20 | – | | | | |
| | Channels (differential) | 12 | 9 | – | 12 | 9 | 12 | 9 | – | | | | |
| ADC 12-bit mode | MSPS | 3.5 | | | | | | | | | | | |
| | Conversion Time (ns)[2] | 280 | | | | | | | | | | | |
| | Input pins | 24 | 20 | 20 | 24 | 20 | 24 | 20 | 24 | 20 | 14 | 24 | 20 |
| | Channels (single-ended) | 24 | 20 | 20 | 24 | 20 | 24 | 20 | 24 | 20 | 14 | 24 | 20 |
| Number of 16-bit or 12-bit ADCs | | 4 | | – | 4 | | | | – | | | | |
| Number of 12-bit only ADCs | | – | | 4 | – | | | | 4 | | 2 | 4 | |
| Temperature sensor | | 1 | | | | | | | | | | | |
| CMPSS (each CMPSS has two comparators and two internal DACs) | | 8 | | | | | | | 8 | | 4 | 8 | |
| Buffered DAC | | 3 | | | | | | | | | | | |
| **Control Peripherals[3]** | | | | | | | | | | | | | |
| eCAP inputs – Type 0 | | 6 | | | | | | | | | | | |
| Enhanced Pulse Width Modulator (ePWM) channels – Type 4 | | 24 | | | | | | | 24 | | 15 | 24 | |
| eQEP modules – Type 0 | | 3 | | | | | | | 3 | | 2 | 3 | |
| High-resolution ePWM channels – Type 4 | | 16 | | | | | | | 16 | | 9 | 16 | |
| SDFM channels – Type 0 | | 8 | | | | | | | 8 | | 6 | 8 | |
| **Communication Peripherals[3]** | | | | | | | | | | | | | |
| Controller Area Network (CAN) – Type 0[4] | | 2 | | | | | | | | | | | |
| Inter-Integrated Circuit (I2C) – Type 0 | | 2 | | | | | | | | | | | |
| Multichannel Buffered Serial Port (McBSP) – Type 1 | | 2 | | | | | | | | | | | |
| SCI – Type 0 | | 4 | | | | | | | 4 | | 3 | 4 | |
| Serial Peripheral Interface (SPI) – Type 2 | | 3 | | | | | | | | | | | |
| USB – Type 0 | | 1 | | | | | | | | | | | |
| uPP – Type 0 | | 1 | | | | | | | | | | | |
| **Temperature and Qualification** | | | | | | | | | | | | | |
| Junction Temperature ($T_J$) | T: –40°C to 105°C | Yes | | No | Yes | | | | Yes | | No | Yes | |
| | S: –40°C to 125°C | Yes | | | | | | | | | | | |
| | Q: –40°C to 150°C[5] | No | Yes | No | Yes | | No | | | | | | |
| Free-Air Temperature ($T_A$) | Q: –40°C to 125°C[5] | No | Yes | No | Yes | | No | | | | | | |

(2) Time between start of sample-and-hold window to start of sample-and-hold window of the next conversion.
(3) For devices that are available in more than one package, the peripheral count listed in the smaller package is reduced because the smaller package has less device pins available. The number of peripherals internally present on the device is not reduced compared to the largest package offered within a part number. See Section 4 to identify which peripheral instances are accessible on pins in the smaller package.
(4) The CAN module uses the IP known as *D_CAN*. This document uses the names *CAN* and *D_CAN* interchangeably to reference this peripheral.
(5) The letter Q refers to AEC Q100 qualification for automotive applications.

Copyright © 2013–2020, Texas Instruments Incorporated

## 3.1 Related Products

For information about similar products, see the following links:

TMS320F2837xD Microcontrollers
The F2837xD series sets a new standard for performance with dual subsystems. Each subsystem consists of a C28x CPU and a parallel control law accelerator (CLA), each running at 200 MHz. Enhancing performance are TMU and VCU accelerators. New capabilities include multiple 16-bit/12-bit mode ADCs, DAC, Sigma-Delta filters, USB, configurable logic block (CLB), on-chip oscillators, and enhanced versions of all peripherals. The F2837xD is available with up to 1MB of Flash. It is available in a 176-pin QFP or 337-pin BGA package.

TMS320F2837xS Microcontrollers
The F2837xS series is a pin-to-pin compatible version of F2837xD but with only one C28x-CPU-and-CLA subsystem enabled. It is also available in a 100-pin QFP to enable compatibility with the TMS320F2807x series.


Copyright © 2013–2020, Texas Instruments Incorporated

# 4 Terminal Configuration and Functions

## 4.1 Pin Diagrams

Figure 4-1 to Figure 4-4 show the terminal assignments on the 337-ball ZWT New Fine Pitch Ball Grid Array. Each figure shows a quadrant of the terminal assignments. Figure 4-5 shows the pin assignments on the 176-pin PTP PowerPAD Thermally Enhanced Low-Profile Quad Flatpack. Figure 4-6 shows the pin assignments on the 100-pin PZP PowerPAD Thermally Enhanced Thin Quad Flatpack.

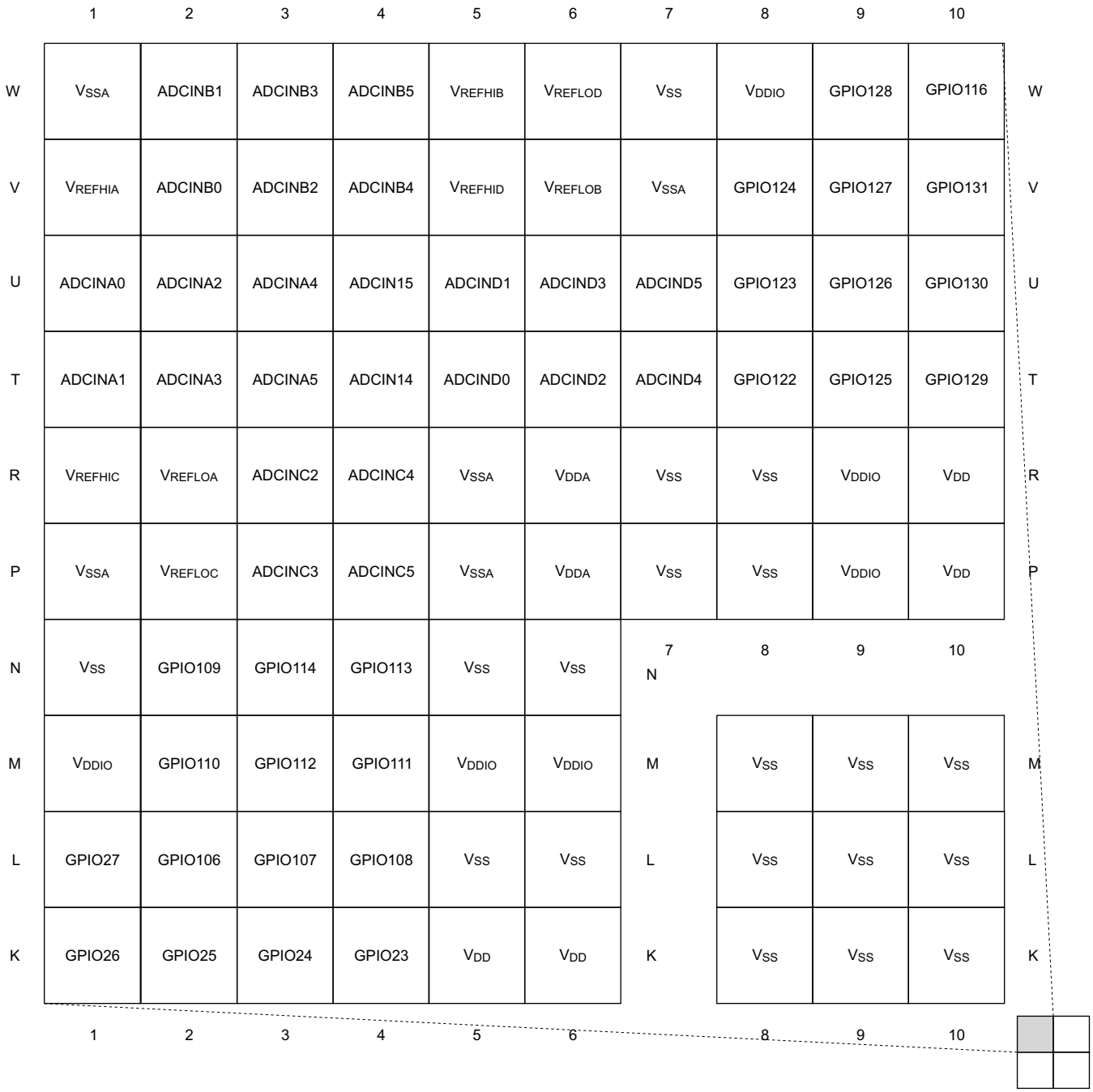


A. Only the GPIO function is shown on GPIO terminals. See Table 4-1 for the complete, muxed signal name.

**Figure 4-1. 337-Ball ZWT New Fine Pitch Ball Grid Array (Bottom View) – [Quadrant A]**

| | 11 | 12 | 13 | 14 | 15 | 16 | 17 | 18 | 19 | |
|---|---|---|---|---|---|---|---|---|---|---|
| W | GPIO29 | FLT1 | TDI | TMS | TDO | GPIO121 | GPIO39 | GPIO132 | $V_{SS}$ | W |
| V | GPIO28 | GPIO115 | FLT2 | $\overline{TRST}$ | TCK | GPIO36 | GPIO40 | GPIO134 | $V_{DDIO}$ | V |
| U | GPIO31 | GPIO117 | GPIO32 | GPIO34 | GPIO120 | GPIO37 | GPIO41 | GPIO135 | ERRORSTS | U |
| T | GPIO30 | GPIO118 | GPIO33 | GPIO35 | GPIO119 | GPIO38 | GPIO136 | GPIO137 | GPIO138 | T |
| R | $V_{DD3VFL}$ | $V_{DD3VFL}$ | $V_{DD}$ | $V_{SS}$ | $V_{SS}$ | GPIO48 | GPIO49 | GPIO50 | GPIO51 | R |
| P | $V_{SS}$ | $V_{SS}$ | $V_{DD}$ | $V_{SS}$ | $V_{SS}$ | GPIO52 | GPIO53 | GPIO54 | GPIO55 | P |
| | 11 | 12 | 13 N | $V_{DDIO}$ | $V_{DDIO}$ | GPIO56 | GPIO58 | GPIO57 | GPIO139 | N |
| M | $V_{SS}$ | $V_{SS}$ | M | $V_{SS}$ | $V_{SS}$ | GPIO59 | GPIO60 | GPIO141 | GPIO140 | M |
| L | $V_{SS}$ | $V_{SS}$ | L | $V_{DDIO}$ | $V_{DDIO}$ | GPIO61 | GPIO64 | $V_{SS}$ | GPIO142 | L |
| K | $V_{SS}$ | $V_{SS}$ | K | $V_{SS}$ | $V_{SS}$ | GPIO65 | GPIO66 | GPIO44 | GPIO45 | K |
| | 11 | 12 | | 14 | 15 | 16 | 17 | 18 | 19 | |

A. Only the GPIO function is shown on GPIO terminals. See Table 4-1 for the complete, muxed signal name.

**Figure 4-2. 337-Ball ZWT New Fine Pitch Ball Grid Array (Bottom View) – [Quadrant B]**


Copyright © 2013–2020, Texas Instruments Incorporated

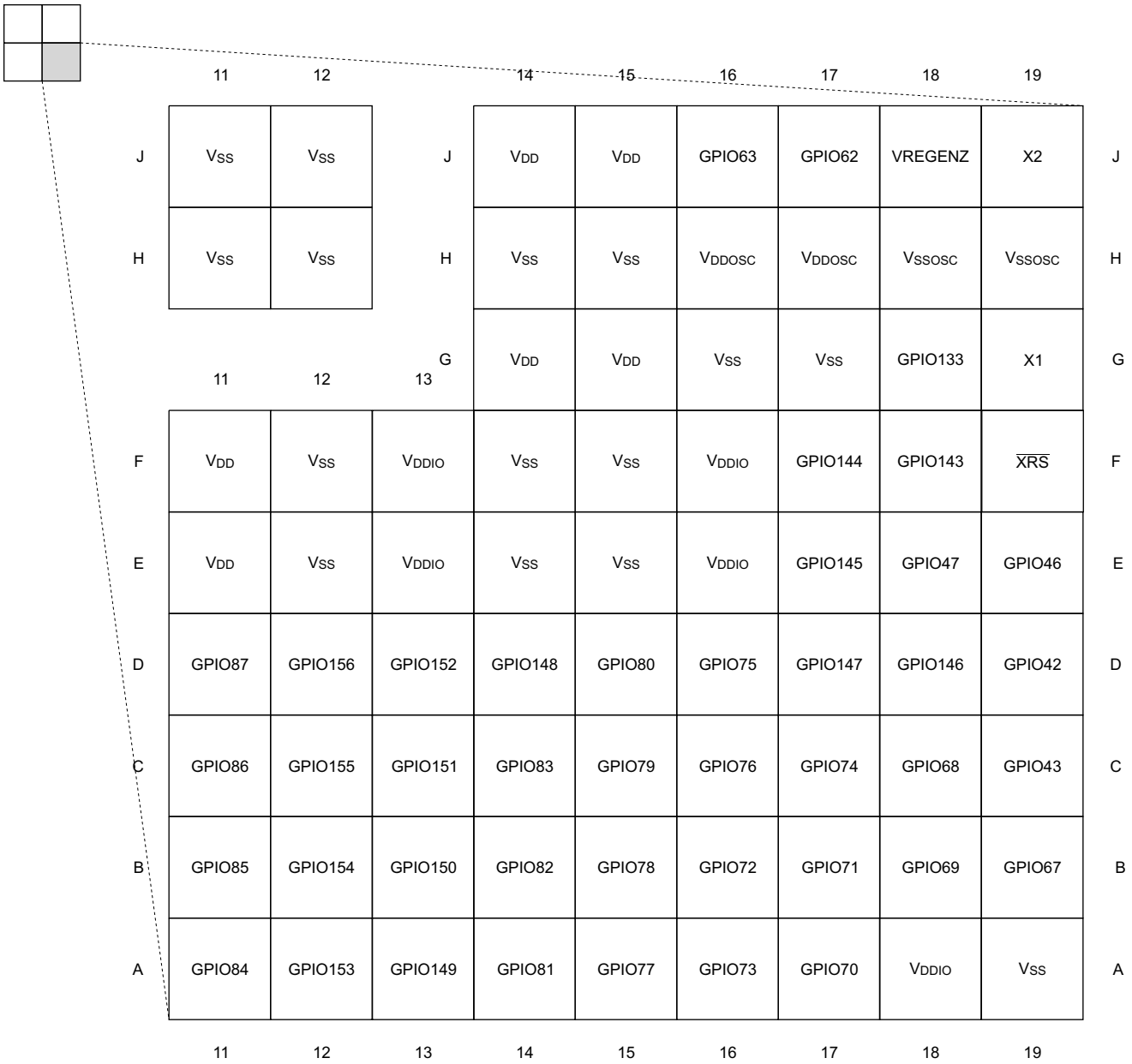


A. Only the GPIO function is shown on GPIO terminals. See Table 4-1 for the complete, muxed signal name.

**Figure 4-3. 337-Ball ZWT New Fine Pitch Ball Grid Array (Bottom View) – [Quadrant C]**

| | 1 | 2 | 3 | 4 | 5 | 6 | 7 | 8 | 9 | 10 | |
|---|---|---|---|---|---|---|---|---|---|---|---|
| J | GPIO103 | GPIO104 | GPIO105 | GPIO22 | $V_{SS}$ | $V_{SS}$ | | $V_{SS}$ | $V_{SS}$ | $V_{SS}$ | J |
| H | GPIO100 | GPIO101 | GPIO102 | NC | $V_{DDIO}$ | $V_{DDIO}$ | | $V_{SS}$ | $V_{SS}$ | $V_{SS}$ | H |
| G | GPIO99 | GPIO8 | GPIO9 | $V_{DDIO}$ | $V_{DDIO}$ | $V_{DDIO}$ | | | | | G |
| F | GPIO98 | GPIO20 | GPIO21 | $V_{DDIO}$ | $V_{SS}$ | $V_{SS}$ | $V_{DDIO}$ | $V_{SS}$ | $V_{DD}$ | $V_{DDIO}$ | F |
| E | GPIO16 | GPIO17 | GPIO18 | GPIO19 | $V_{SS}$ | $V_{SS}$ | $V_{DDIO}$ | $V_{SS}$ | $V_{DD}$ | $V_{DDIO}$ | E |
| D | GPIO13 | GPIO14 | GPIO15 | GPIO168 | GPIO166 | GPIO89 | GPIO5 | GPIO1 | GPIO162 | GPIO159 | D |
| C | GPIO11 | GPIO12 | GPIO96 | GPIO167 | GPIO165 | GPIO88 | GPIO4 | GPIO0 | GPIO161 | GPIO158 | C |
| B | $V_{DDIO}$ | GPIO10 | GPIO95 | GPIO93 | GPIO91 | GPIO7 | GPIO3 | GPIO164 | GPIO160 | GPIO157 | B |
| A | $V_{SS}$ | GPIO97 | GPIO94 | GPIO92 | GPIO90 | GPIO6 | GPIO2 | GPIO163 | $V_{DDIO}$ | $V_{SS}$ | A |
| | 1 | 2 | 3 | 4 | 5 | 6 | 7 | 8 | 9 | 10 | |

A. Only the GPIO function is shown on GPIO terminals. See Table 4-1 for the complete, muxed signal name.

**Figure 4-4. 337-Ball ZWT New Fine Pitch Ball Grid Array (Bottom View) – [Quadrant D]**


Copyright © 2013–2020, Texas Instruments Incorporated

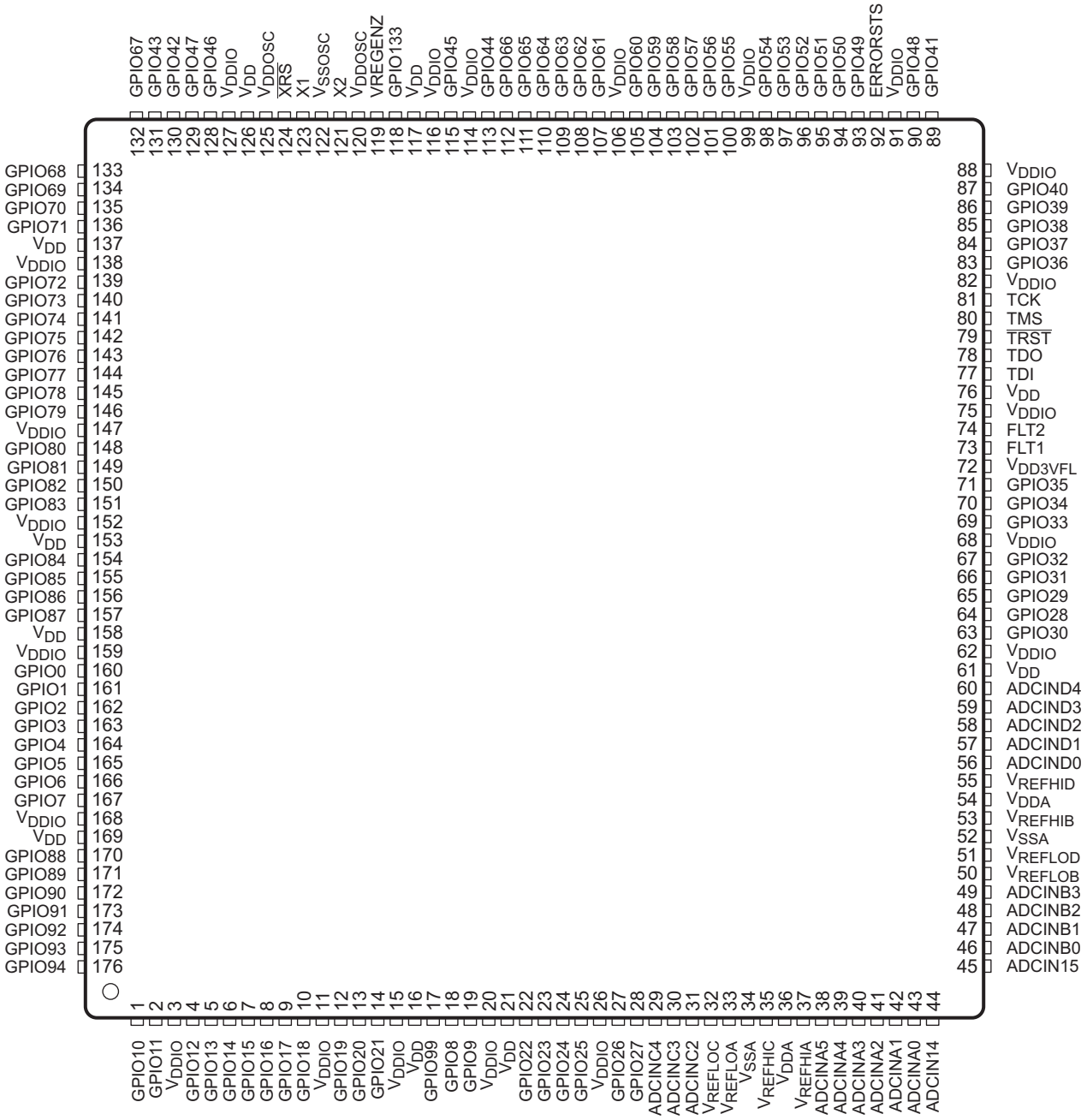


A. Only the GPIO function is shown on GPIO pins. See Table 4-1 for the complete, muxed signal name.

**Figure 4-5. 176-Pin PTP PowerPAD Thermally Enhanced Low-Profile Quad Flatpack (Top View)**

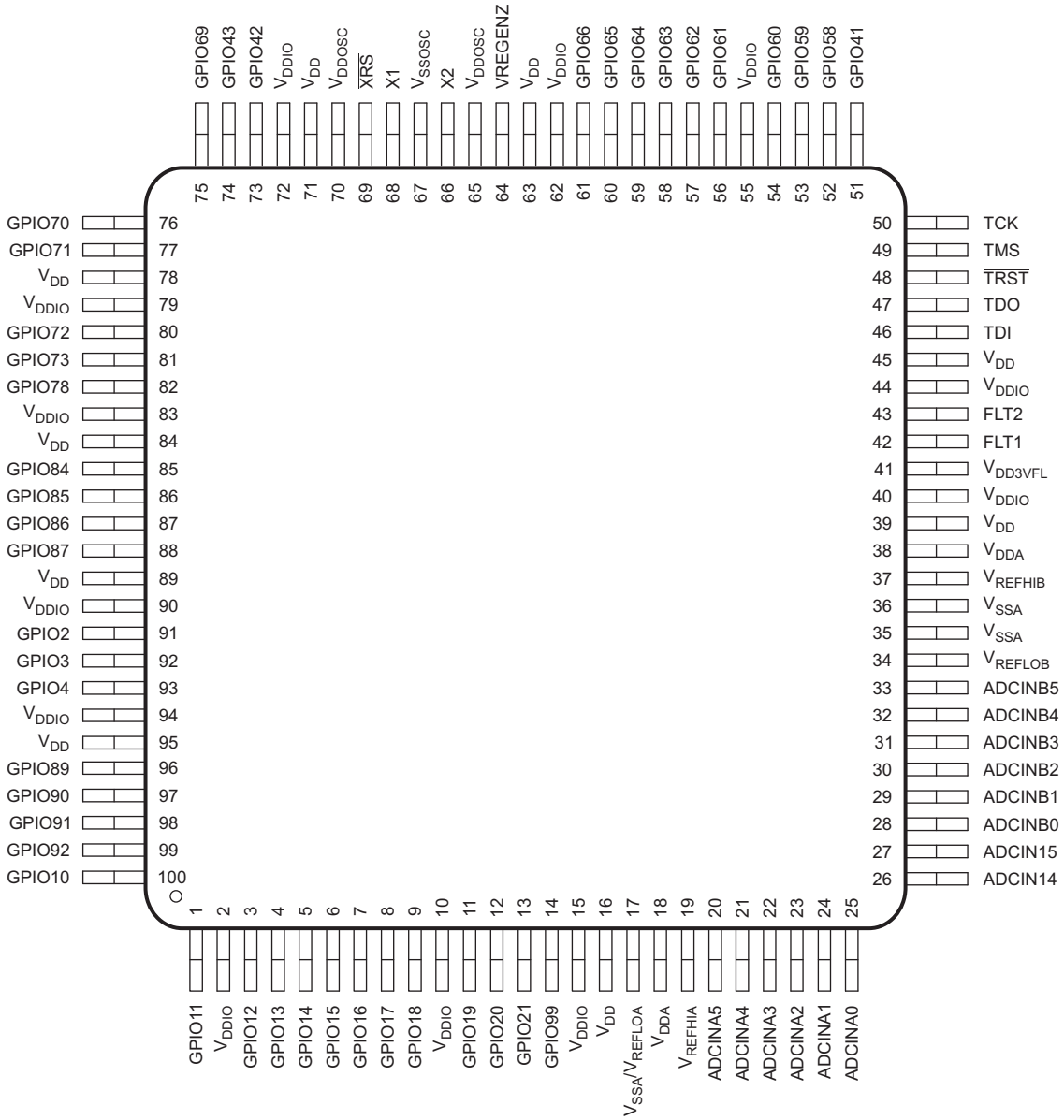


A. Only the GPIO function is shown on GPIO pins. See Table 4-1 for the complete, muxed signal name.

**Figure 4-6. 100-Pin PZP PowerPAD HTQFP (Top View)**

---

**NOTE**

The exposed lead frame die pad of the PowerPAD™ package serves two functions: to remove heat from the die and to provide ground path for the digital ground (analog ground is provided through dedicated pins). Thus, the PowerPAD should be soldered to the ground (GND) plane of the PCB because this will provide both the digital ground path and good thermal conduction path. To make optimum use of the thermal efficiencies designed into the PowerPAD package, the PCB must be designed with this technology in mind. A thermal land is required on the surface of the PCB directly underneath the body of the PowerPAD. The thermal land should be soldered to the exposed lead frame die pad of the PowerPAD package; the thermal land should be as large as needed to dissipate the required heat. An array of thermal vias should be used to connect the thermal pad to the internal GND plane of the board. See *PowerPAD™ Thermally Enhanced Package* for more details on using the PowerPAD package.

---


Copyright © 2013–2020, Texas Instruments Incorporated

**NOTE**

PCB footprints and schematic symbols are available for download in a vendor-neutral format, which can be exported to the leading EDA CAD/CAE design tools. See the CAD/CAE Symbols section in the product folder for each device, under the Packaging section. These footprints and symbols can also be searched for at http://webench.ti.com/cad/.

## 4.2 Signal Descriptions

Table 4-1 describes the signals. The GPIO function is the default at reset, unless otherwise mentioned. The peripheral signals that are listed under them are alternate functions. Some peripheral functions may not be available in all devices. See Table 3-1 for details. All GPIO pins are I/O/Z and have an internal pullup, which can be selectively enabled or disabled on a per-pin basis. This feature only applies to the GPIO pins. The pullups are not enabled at reset.

**Table 4-1. Signal Descriptions**

| TERMINAL | | | | | I/O/Z[(1)] | DESCRIPTION |
|---|---|---|---|---|---|---|
| NAME | MUX POSITION | ZWT BALL NO. | PTP PIN NO. | PZP PIN NO. | | |
| **ADC, DAC, AND COMPARATOR SIGNALS** | | | | | | |
| $V_{REFHIA}$ | | V1 | 37 | 19 | I | ADC-A high reference. This voltage must be driven into the pin from external circuitry. Place at least a 1-µF capacitor on this pin for the 12-bit mode, or at least a 22-µF capacitor for the 16-bit mode. This capacitor should be placed as close to the device as possible between the $V_{REFHIA}$ and $V_{REFLOA}$ pins.<br>**NOTE:** Do not load this pin externally. |
| $V_{REFHIB}$ | | W5 | 53 | 37 | I | ADC-B high reference. This voltage must be driven into the pin from external circuitry. Place at least a 1-µF capacitor on this pin for the 12-bit mode, or at least a 22-µF capacitor for the 16-bit mode. This capacitor should be placed as close to the device as possible between the $V_{REFHIB}$ and $V_{REFLOB}$ pins.<br>**NOTE:** Do not load this pin externally. |
| $V_{REFHIC}$ | | R1 | 35 | – | I | ADC-C high reference. This voltage must be driven into the pin from external circuitry. Place at least a 1-µF capacitor on this pin for the 12-bit mode, or at least a 22-µF capacitor for the 16-bit mode. This capacitor should be placed as close to the device as possible between the $V_{REFHIC}$ and $V_{REFLOC}$ pins.<br>**NOTE:** Do not load this pin externally. |
| $V_{REFHID}$ | | V5 | 55 | – | I | ADC-D high reference. This voltage must be driven into the pin from external circuitry. Place at least a 1-µF capacitor on this pin for the 12-bit mode, or at least a 22-µF capacitor for the 16-bit mode. This capacitor should be placed as close to the device as possible between the $V_{REFHID}$ and $V_{REFLOD}$ pins.<br>**NOTE:** Do not load this pin externally. |
| $V_{REFLOA}$ | | R2 | 33 | 17 | I | ADC-A low reference.<br>On the PZP package, pin 17 is double-bonded to $V_{SSA}$ and $V_{REFLOA}$. On the PZP package, pin 17 must be connected to $V_{SSA}$ on the system board. |
| $V_{REFLOB}$ | | V6 | 50 | 34 | I | ADC-B low reference |
| $V_{REFLOC}$ | | P2 | 32 | – | I | ADC-C low reference |
| $V_{REFLOD}$ | | W6 | 51 | – | I | ADC-D low reference |
| ADCIN14 | | T4 | 44 | 26 | I | Input 14 to all ADCs. This pin can be used as a general-purpose ADCIN pin or it can be used to calibrate all ADCs together (either single-ended or differential) from an external reference. |
| CMPIN4P | | | | | I | Comparator 4 positive input |
| ADCIN15 | | U4 | 45 | 27 | I | Input 15 to all ADCs. This pin can be used as a general-purpose ADCIN pin or it can be used to calibrate all ADCs together (either single-ended or differential) from an external reference. |
| CMPIN4N | | | | | I | Comparator 4 negative input |


Copyright © 2013–2020, Texas Instruments Incorporated

**Table 4-1. Signal Descriptions (continued)**

| TERMINAL | | | | | I/O/Z[1] | DESCRIPTION |
|---|---|---|---|---|---|---|
| NAME | MUX POSITION | ZWT BALL NO. | PTP PIN NO. | PZP PIN NO. | | |
| ADCINA0 | | U1 | 43 | 25 | I | ADC-A input 0. There is a 50-kΩ internal pulldown on this pin in both an ADC input or DAC output mode which cannot be disabled. |
| DACOUTA | | | | | O | DAC-A output |
| ADCINA1 | | T1 | 42 | 24 | I | ADC-A input 1. There is a 50-kΩ internal pulldown on this pin in both an ADC input or DAC output mode which cannot be disabled. |
| DACOUTB | | | | | O | DAC-B output |
| ADCINA2 | | U2 | 41 | 23 | I | ADC-A input 2 |
| CMPIN1P | | | | | I | Comparator 1 positive input |
| ADCINA3 | | T2 | 40 | 22 | I | ADC-A input 3 |
| CMPIN1N | | | | | I | Comparator 1 negative input |
| ADCINA4 | | U3 | 39 | 21 | I | ADC-A input 4 |
| CMPIN2P | | | | | I | Comparator 2 positive input |
| ADCINA5 | | T3 | 38 | 20 | I | ADC-A input 5 |
| CMPIN2N | | | | | I | Comparator 2 negative input |
| ADCINB0 | | V2 | 46 | 28 | I | ADC-B input 0. There is a 100-pF capacitor to $V_{SSA}$ on this pin in both ADC input or DAC reference mode which cannot be disabled. If this pin is being used as a reference for the on-chip DACs, place at least a 1-µF capacitor on this pin. |
| VDAC | | | | | I | Optional external reference voltage for on-chip DACs. There is a 100-pF capacitor to $V_{SSA}$ on this pin in both ADC input or DAC reference mode which cannot be disabled. If this pin is being used as a reference for the on-chip DACs, place at least a 1-µF capacitor on this pin. |
| ADCINB1 | | W2 | 47 | 29 | I | ADC-B input 1. There is a 50-kΩ internal pulldown on this pin in both an ADC input or DAC output mode which cannot be disabled. |
| DACOUTC | | | | | O | DAC-C output |
| ADCINB2 | | V3 | 48 | 30 | I | ADC-B input 2 |
| CMPIN3P | | | | | I | Comparator 3 positive input |
| ADCINB3 | | W3 | 49 | 31 | I | ADC-B input 3 |
| CMPIN3N | | | | | I | Comparator 3 negative input |
| ADCINB4 | | V4 | – | 32 | I | ADC-B input 4 |
| ADCINB5 | | W4 | – | 33 | I | ADC-B input 5 |
| ADCINC2 | | R3 | 31 | – | I | ADC-C input 2 |
| CMPIN6P | | | | | I | Comparator 6 positive input |
| ADCINC3 | | P3 | 30 | – | I | ADC-C input 3 |
| CMPIN6N | | | | | I | Comparator 6 negative input |
| ADCINC4 | | R4 | 29 | – | I | ADC-C input 4 |
| CMPIN5P | | | | | I | Comparator 5 positive input |
| ADCINC5 | | P4 | – | – | I | ADC-C input 5 |
| CMPIN5N | | | | | I | Comparator 5 negative input |
| ADCIND0 | | T5 | 56 | – | I | ADC-D input 0 |
| CMPIN7P | | | | | I | Comparator 7 positive input |
| ADCIND1 | | U5 | 57 | – | I | ADC-D input 1 |
| CMPIN7N | | | | | I | Comparator 7 negative input |

**Table 4-1. Signal Descriptions (continued)**

| TERMINAL | | | | | I/O/Z[1] | DESCRIPTION |
|---|---|---|---|---|---|---|
| NAME | MUX POSITION | ZWT BALL NO. | PTP PIN NO. | PZP PIN NO. | | |
| ADCIND2 | | T6 | 58 | – | I | ADC-D input 2 |
| CMPIN8P | | | | | I | Comparator 8 positive input |
| ADCIND3 | | U6 | 59 | – | I | ADC-D input 3 |
| CMPIN8N | | | | | I | Comparator 8 negative input |
| ADCIND4 | | T7 | 60 | – | I | ADC-D input 4 |
| ADCIND5 | | U7 | – | – | I | ADC-D input 5 |
| **GPIO AND PERIPHERAL SIGNALS** | | | | | | |
| GPIO0 | 0, 4, 8, 12 | C8 | 160 | – | I/O | General-purpose input/output 0 |
| EPWM1A | 1 | | | | O | Enhanced PWM1 output A (HRPWM-capable) |
| SDAA | 6 | | | | I/OD | I2C-A data open-drain bidirectional port |
| GPIO1 | 0, 4, 8, 12 | D8 | 161 | – | I/O | General-purpose input/output 1 |
| EPWM1B | 1 | | | | O | Enhanced PWM1 output B (HRPWM-capable) |
| MFSRB | 3 | | | | I/O | McBSP-B receive frame synch |
| SCLA | 6 | | | | I/OD | I2C-A clock open-drain bidirectional port |
| GPIO2 | 0, 4, 8, 12 | A7 | 162 | 91 | I/O | General-purpose input/output 2 |
| EPWM2A | 1 | | | | O | Enhanced PWM2 output A (HRPWM-capable) |
| OUTPUTXBAR1 | 5 | | | | O | Output 1 of the output XBAR |
| SDAB | 6 | | | | I/OD | I2C-B data open-drain bidirectional port |
| GPIO3 | 0, 4, 8, 12 | B7 | 163 | 92 | I/O | General-purpose input/output 3 |
| EPWM2B | 1 | | | | O | Enhanced PWM2 output B (HRPWM-capable) |
| OUTPUTXBAR2 | 2 | | | | O | Output 2 of the output XBAR |
| MCLKRB | 3 | | | | I/O | McBSP-B receive clock |
| OUTPUTXBAR2 | 5 | | | | O | Output 2 of the output XBAR |
| SCLB | 6 | | | | I/OD | I2C-B clock open-drain bidirectional port |
| GPIO4 | 0, 4, 8, 12 | C7 | 164 | 93 | I/O | General-purpose input/output 4 |
| EPWM3A | 1 | | | | O | Enhanced PWM3 output A (HRPWM-capable) |
| OUTPUTXBAR3 | 5 | | | | O | Output 3 of the output XBAR |
| CANTXA | 6 | | | | O | CAN-A transmit |
| GPIO5 | 0, 4, 8, 12 | D7 | 165 | – | I/O | General-purpose input/output 5 |
| EPWM3B | 1 | | | | O | Enhanced PWM3 output B (HRPWM-capable) |
| MFSRA | 2 | | | | I/O | McBSP-A receive frame synch |
| OUTPUTXBAR3 | 3 | | | | O | Output 3 of the output XBAR |
| CANRXA | 6 | | | | I | CAN-A receive |
| GPIO6 | 0, 4, 8, 12 | A6 | 166 | – | I/O | General-purpose input/output 6 |
| EPWM4A | 1 | | | | O | Enhanced PWM4 output A (HRPWM-capable) |
| OUTPUTXBAR4 | 2 | | | | O | Output 4 of the output XBAR |
| EXTSYNCOUT | 3 | | | | O | External ePWM synch pulse output |
| EQEP3A | 5 | | | | I | Enhanced QEP3 input A |
| CANTXB | 6 | | | | O | CAN-B transmit |
| GPIO7 | 0, 4, 8, 12 | B6 | 167 | – | I/O | General-purpose input/output 7 |
| EPWM4B | 1 | | | | O | Enhanced PWM4 output B (HRPWM-capable) |
| MCLKRA | 2 | | | | I/O | McBSP-A receive clock |
| OUTPUTXBAR5 | 3 | | | | O | Output 5 of the output XBAR |
| EQEP3B | 5 | | | | I | Enhanced QEP3 input B |
| CANRXB | 6 | | | | I | CAN-B receive |


Copyright © 2013–2020, Texas Instruments Incorporated

**Table 4-1. Signal Descriptions (continued)**

| TERMINAL | | | | | I/O/Z[1] | DESCRIPTION |
|---|---|---|---|---|---|---|
| NAME | MUX POSITION | ZWT BALL NO. | PTP PIN NO. | PZP PIN NO. | | |
| GPIO8 | 0, 4, 8, 12 | G2 | 18 | – | I/O | General-purpose input/output 8 |
| EPWM5A | 1 | | | | O | Enhanced PWM5 output A (HRPWM-capable) |
| CANTXB | 2 | | | | O | CAN-B transmit |
| ADCSOCAO | 3 | | | | O | ADC start-of-conversion A output for external ADC |
| EQEP3S | 5 | | | | I/O | Enhanced QEP3 strobe |
| SCITXDA | 6 | | | | O | SCI-A transmit data |
| GPIO9 | 0, 4, 8, 12 | G3 | 19 | – | I/O | General-purpose input/output 9 |
| EPWM5B | 1 | | | | O | Enhanced PWM5 output B (HRPWM-capable) |
| SCITXDB | 2 | | | | O | SCI-B transmit data |
| OUTPUTXBAR6 | 3 | | | | O | Output 6 of the output XBAR |
| EQEP3I | 5 | | | | I/O | Enhanced QEP3 index |
| SCIRXDA | 6 | | | | I | SCI-A receive data |
| GPIO10 | 0, 4, 8, 12 | B2 | 1 | 100 | I/O | General-purpose input/output 10 |
| EPWM6A | 1 | | | | O | Enhanced PWM6 output A (HRPWM-capable) |
| CANRXB | 2 | | | | I | CAN-B receive |
| ADCSOCBO | 3 | | | | O | ADC start-of-conversion B output for external ADC |
| EQEP1A | 5 | | | | I | Enhanced QEP1 input A |
| SCITXDB | 6 | | | | O | SCI-B transmit data |
| UPP-WAIT | 15 | | | | I/O | Universal parallel port wait. Receiver asserts to request a pause in transfer. |
| GPIO11 | 0, 4, 8, 12 | C1 | 2 | 1 | I/O | General-purpose input/output 11 |
| EPWM6B | 1 | | | | O | Enhanced PWM6 output B (HRPWM-capable) |
| SCIRXDB | 2, 6 | | | | I | SCI-B receive data |
| OUTPUTXBAR7 | 3 | | | | O | Output 7 of the output XBAR |
| EQEP1B | 5 | | | | I | Enhanced QEP1 input B |
| UPP-START | 15 | | | | I/O | Universal parallel port start. Transmitter asserts at start of DMA line. |
| GPIO12 | 0, 4, 8, 12 | C2 | 4 | 3 | I/O | General-purpose input/output 12 |
| EPWM7A | 1 | | | | O | Enhanced PWM7 output A (HRPWM-capable) |
| CANTXB | 2 | | | | O | CAN-B transmit |
| MDXB | 3 | | | | O | McBSP-B transmit serial data |
| EQEP1S | 5 | | | | I/O | Enhanced QEP1 strobe |
| SCITXDC | 6 | | | | O | SCI-C transmit data |
| UPP-ENA | 15 | | | | I/O | Universal parallel port enable. Transmitter asserts while data bus is active. |
| GPIO13 | 0, 4, 8, 12 | D1 | 5 | 4 | I/O | General-purpose input/output 13 |
| EPWM7B | 1 | | | | O | Enhanced PWM7 output B (HRPWM-capable) |
| CANRXB | 2 | | | | I | CAN-B receive |
| MDRB | 3 | | | | I | McBSP-B receive serial data |
| EQEP1I | 5 | | | | I/O | Enhanced QEP1 index |
| SCIRXDC | 6 | | | | I | SCI-C receive data |
| UPP-D7 | 15 | | | | I/O | Universal parallel port data line 7 |

Copyright © 2013–2020, Texas Instruments Incorporated

**Table 4-1. Signal Descriptions (continued)**

| TERMINAL | | | | | I/O/Z[1] | DESCRIPTION |
|---|---|---|---|---|---|---|
| NAME | MUX POSITION | ZWT BALL NO. | PTP PIN NO. | PZP PIN NO. | | |
| GPIO14 | 0, 4, 8, 12 | D2 | 6 | 5 | I/O | General-purpose input/output 14 |
| EPWM8A | 1 | | | | O | Enhanced PWM8 output A (HRPWM-capable) |
| SCITXDB | 2 | | | | O | SCI-B transmit data |
| MCLKXB | 3 | | | | I/O | McBSP-B transmit clock |
| OUTPUTXBAR3 | 6 | | | | O | Output 3 of the output XBAR |
| UPP-D6 | 15 | | | | I/O | Universal parallel port data line 6 |
| GPIO15 | 0, 4, 8, 12 | D3 | 7 | 6 | I/O | General-purpose input/output 15 |
| EPWM8B | 1 | | | | O | Enhanced PWM8 output B (HRPWM-capable) |
| SCIRXDB | 2 | | | | I | SCI-B receive data |
| MFSXB | 3 | | | | I/O | McBSP-B transmit frame synch |
| OUTPUTXBAR4 | 6 | | | | O | Output 4 of the output XBAR |
| UPP-D5 | 15 | | | | I/O | Universal parallel port data line 5 |
| GPIO16 | 0, 4, 8, 12 | E1 | 8 | 7 | I/O | General-purpose input/output 16 |
| SPISIMOA | 1 | | | | I/O | SPI-A slave in, master out |
| CANTXB | 2 | | | | O | CAN-B transmit |
| OUTPUTXBAR7 | 3 | | | | O | Output 7 of the output XBAR |
| EPWM9A | 5 | | | | O | Enhanced PWM9 output A |
| SD1_D1 | 7 | | | | I | Sigma-Delta 1 channel 1 data input |
| UPP-D4 | 15 | | | | I/O | Universal parallel port data line 4 |
| GPIO17 | 0, 4, 8, 12 | E2 | 9 | 8 | I/O | General-purpose input/output 17 |
| SPISOMIA | 1 | | | | I/O | SPI-A slave out, master in |
| CANRXB | 2 | | | | I | CAN-B receive |
| OUTPUTXBAR8 | 3 | | | | O | Output 8 of the output XBAR |
| EPWM9B | 5 | | | | O | Enhanced PWM9 output B |
| SD1_C1 | 7 | | | | I | Sigma-Delta 1 channel 1 clock input |
| UPP-D3 | 15 | | | | I/O | Universal parallel port data line 3 |
| GPIO18 | 0, 4, 8, 12 | E3 | 10 | 9 | I/O | General-purpose input/output 18 |
| SPICLKA | 1 | | | | I/O | SPI-A clock |
| SCITXDB | 2 | | | | O | SCI-B transmit data |
| CANRXA | 3 | | | | I | CAN-A receive |
| EPWM10A | 5 | | | | O | Enhanced PWM10 output A |
| SD1_D2 | 7 | | | | I | Sigma-Delta 1 channel 2 data input |
| UPP-D2 | 15 | | | | I/O | Universal parallel port data line 2 |
| GPIO19 | 0, 4, 8, 12 | E4 | 12 | 11 | I/O | General-purpose input/output 19 |
| $\overline{\text{SPISTEA}}$ | 1 | | | | I/O | SPI-A slave transmit enable |
| SCIRXDB | 2 | | | | I | SCI-B receive data |
| CANTXA | 3 | | | | O | CAN-A transmit |
| EPWM10B | 5 | | | | O | Enhanced PWM10 output B |
| SD1_C2 | 7 | | | | I | Sigma-Delta 1 channel 2 clock input |
| UPP-D1 | 15 | | | | I/O | Universal parallel port data line 1 |


Copyright © 2013–2020, Texas Instruments Incorporated

**Table 4-1. Signal Descriptions (continued)**

| TERMINAL | | | | | I/O/Z[1] | DESCRIPTION |
|---|---|---|---|---|---|---|
| NAME | MUX POSITION | ZWT BALL NO. | PTP PIN NO. | PZP PIN NO. | | |
| GPIO20 | 0, 4, 8, 12 | F2 | 13 | 12 | I/O | General-purpose input/output 20 |
| EQEP1A | 1 | | | | I | Enhanced QEP1 input A |
| MDXA | 2 | | | | O | McBSP-A transmit serial data |
| CANTXB | 3 | | | | O | CAN-B transmit |
| EPWM11A | 5 | | | | O | Enhanced PWM11 output A |
| SD1_D3 | 7 | | | | I | Sigma-Delta 1 channel 3 data input |
| UPP-D0 | 15 | | | | I/O | Universal parallel port data line 0 |
| GPIO21 | 0, 4, 8, 12 | F3 | 14 | 13 | I/O | General-purpose input/output 21 |
| EQEP1B | 1 | | | | I | Enhanced QEP1 input B |
| MDRA | 2 | | | | I | McBSP-A receive serial data |
| CANRXB | 3 | | | | I | CAN-B receive |
| EPWM11B | 5 | | | | O | Enhanced PWM11 output B |
| SD1_C3 | 7 | | | | I | Sigma-Delta 1 channel 3 clock input |
| UPP-CLK | 15 | | | | I/O | Universal parallel port transmit clock |
| GPIO22 | 0, 4, 8, 12 | J4 | 22 | – | I/O | General-purpose input/output 22 |
| EQEP1S | 1 | | | | I/O | Enhanced QEP1 strobe |
| MCLKXA | 2 | | | | I/O | McBSP-A transmit clock |
| SCITXDB | 3 | | | | O | SCI-B transmit data |
| EPWM12A | 5 | | | | O | Enhanced PWM12 output A |
| SPICLKB | 6 | | | | I/O | SPI-B clock |
| SD1_D4 | 7 | | | | I | Sigma-Delta 1 channel 4 data input |
| GPIO23 | 0, 4, 8, 12 | K4 | 23 | – | I/O | General-purpose input/output 23 |
| EQEP1I | 1 | | | | I/O | Enhanced QEP1 index |
| MFSXA | 2 | | | | I/O | McBSP-A transmit frame synch |
| SCIRXDB | 3 | | | | I | SCI-B receive data |
| EPWM12B | 5 | | | | O | Enhanced PWM12 output B |
| $\overline{\text{SPISTEB}}$ | 6 | | | | I/O | SPI-B slave transmit enable |
| SD1_C4 | 7 | | | | I | Sigma-Delta 1 channel 4 clock input |
| GPIO24 | 0, 4, 8, 12 | K3 | 24 | – | I/O | General-purpose input/output 24 |
| OUTPUTXBAR1 | 1 | | | | O | Output 1 of the output XBAR |
| EQEP2A | 2 | | | | I | Enhanced QEP2 input A |
| MDXB | 3 | | | | O | McBSP-B transmit serial data |
| SPISIMOB | 6 | | | | I/O | SPI-B slave in, master out |
| SD2_D1 | 7 | | | | I | Sigma-Delta 2 channel 1 data input |
| GPIO25 | 0, 4, 8, 12 | K2 | 25 | – | I/O | General-purpose input/output 25 |
| OUTPUTXBAR2 | 1 | | | | O | Output 2 of the output XBAR |
| EQEP2B | 2 | | | | I | Enhanced QEP2 input B |
| MDRB | 3 | | | | I | McBSP-B receive serial data |
| SPISOMIB | 6 | | | | I/O | SPI-B slave out, master in |
| SD2_C1 | 7 | | | | I | Sigma-Delta 2 channel 1 clock input |

**Table 4-1. Signal Descriptions (continued)**

| TERMINAL | | | | | I/O/Z[1] | DESCRIPTION |
|---|---|---|---|---|---|---|
| NAME | MUX POSITION | ZWT BALL NO. | PTP PIN NO. | PZP PIN NO. | | |
| GPIO26 | 0, 4, 8, 12 | K1 | 27 | – | I/O | General-purpose input/output 26 |
| OUTPUTXBAR3 | 1 | | | | O | Output 3 of the output XBAR |
| EQEP2I | 2 | | | | I/O | Enhanced QEP2 index |
| MCLKXB | 3 | | | | I/O | McBSP-B transmit clock |
| OUTPUTXBAR3 | 5 | | | | O | Output 3 of the output XBAR |
| SPICLKB | 6 | | | | I/O | SPI-B clock |
| SD2_D2 | 7 | | | | I | Sigma-Delta 2 channel 2 data input |
| GPIO27 | 0, 4, 8, 12 | L1 | 28 | – | I/O | General-purpose input/output 27 |
| OUTPUTXBAR4 | 1 | | | | O | Output 4 of the output XBAR |
| EQEP2S | 2 | | | | I/O | Enhanced QEP2 strobe |
| MFSXB | 3 | | | | I/O | McBSP-B transmit frame synch |
| OUTPUTXBAR4 | 5 | | | | O | Output 4 of the output XBAR |
| $\overline{\text{SPISTEB}}$ | 6 | | | | I/O | SPI-B slave transmit enable |
| SD2_C2 | 7 | | | | I | Sigma-Delta 2 channel 2 clock input |
| GPIO28 | 0, 4, 8, 12 | V11 | 64 | – | I/O | General-purpose input/output 28 |
| SCIRXDA | 1 | | | | I | SCI-A receive data |
| $\overline{\text{EM1CS4}}$ | 2 | | | | O | External memory interface 1 chip select 4 |
| OUTPUTXBAR5 | 5 | | | | O | Output 5 of the output XBAR |
| EQEP3A | 6 | | | | I | Enhanced QEP3 input A |
| SD2_D3 | 7 | | | | I | Sigma-Delta 2 channel 3 data input |
| GPIO29 | 0, 4, 8, 12 | W11 | 65 | – | I/O | General-purpose input/output 29 |
| SCITXDA | 1 | | | | O | SCI-A transmit data |
| EM1SDCKE | 2 | | | | O | External memory interface 1 SDRAM clock enable |
| OUTPUTXBAR6 | 5 | | | | O | Output 6 of the output XBAR |
| EQEP3B | 6 | | | | I | Enhanced QEP3 input B |
| SD2_C3 | 7 | | | | I | Sigma-Delta 2 channel 3 clock input |
| GPIO30 | 0, 4, 8, 12 | T11 | 63 | – | I/O | General-purpose input/output 30 |
| CANRXA | 1 | | | | I | CAN-A receive |
| EM1CLK | 2 | | | | O | External memory interface 1 clock |
| OUTPUTXBAR7 | 5 | | | | O | Output 7 of the output XBAR |
| EQEP3S | 6 | | | | I/O | Enhanced QEP3 strobe |
| SD2_D4 | 7 | | | | I | Sigma-Delta 2 channel 4 data input |
| GPIO31 | 0, 4, 8, 12 | U11 | 66 | – | I/O | General-purpose input/output 31 |
| CANTXA | 1 | | | | O | CAN-A transmit |
| $\overline{\text{EM1WE}}$ | 2 | | | | O | External memory interface 1 write enable |
| OUTPUTXBAR8 | 5 | | | | O | Output 8 of the output XBAR |
| EQEP3I | 6 | | | | I/O | Enhanced QEP3 index |
| SD2_C4 | 7 | | | | I | Sigma-Delta 2 channel 4 clock input |
| GPIO32 | 0, 4, 8, 12 | U13 | 67 | – | I/O | General-purpose input/output 32 |
| SDAA | 1 | | | | I/OD | I2C-A data open-drain bidirectional port |
| $\overline{\text{EM1CS0}}$ | 2 | | | | O | External memory interface 1 chip select 0 |
| GPIO33 | 0, 4, 8, 12 | T13 | 69 | – | I/O | General-purpose input/output 33 |
| SCLA | 1 | | | | I/OD | I2C-A clock open-drain bidirectional port |
| EM1RNW | 2 | | | | O | External memory interface 1 read not write |


Copyright © 2013–2020, Texas Instruments Incorporated

**Table 4-1. Signal Descriptions (continued)**

| TERMINAL | | | | | I/O/Z[1] | DESCRIPTION |
|---|---|---|---|---|---|---|
| NAME | MUX POSITION | ZWT BALL NO. | PTP PIN NO. | PZP PIN NO. | | |
| GPIO34 | 0, 4, 8, 12 | U14 | 70 | – | I/O | General-purpose input/output 34 |
| OUTPUTXBAR1 | 1 | | | | O | Output 1 of the output XBAR |
| $\overline{\text{EM1CS2}}$ | 2 | | | | O | External memory interface 1 chip select 2 |
| SDAB | 6 | | | | I/OD | I2C-B data open-drain bidirectional port |
| GPIO35 | 0, 4, 8, 12 | T14 | 71 | – | I/O | General-purpose input/output 35 |
| SCIRXDA | 1 | | | | I | SCI-A receive data |
| $\overline{\text{EM1CS3}}$ | 2 | | | | O | External memory interface 1 chip select 3 |
| SCLB | 6 | | | | I/OD | I2C-B clock open-drain bidirectional port |
| GPIO36 | 0, 4, 8, 12 | V16 | 83 | – | I/O | General-purpose input/output 36 |
| SCITXDA | 1 | | | | O | SCI-A transmit data |
| EM1WAIT | 2 | | | | I | External memory interface 1 Asynchronous SRAM WAIT |
| CANRXA | 6 | | | | I | CAN-A receive |
| GPIO37 | 0, 4, 8, 12 | U16 | 84 | – | I/O | General-purpose input/output 37 |
| OUTPUTXBAR2 | 1 | | | | O | Output 2 of the output XBAR |
| $\overline{\text{EM1OE}}$ | 2 | | | | O | External memory interface 1 output enable |
| CANTXA | 6 | | | | O | CAN-A transmit |
| GPIO38 | 0, 4, 8, 12 | T16 | 85 | – | I/O | General-purpose input/output 38 |
| EM1A0 | 2 | | | | O | External memory interface 1 address line 0 |
| SCITXDC | 5 | | | | O | SCI-C transmit data |
| CANTXB | 6 | | | | O | CAN-B transmit |
| GPIO39 | 0, 4, 8, 12 | W17 | 86 | – | I/O | General-purpose input/output 39 |
| EM1A1 | 2 | | | | O | External memory interface 1 address line 1 |
| SCIRXDC | 5 | | | | I | SCI-C receive data |
| CANRXB | 6 | | | | I | CAN-B receive |
| GPIO40 | 0, 4, 8, 12 | V17 | 87 | – | I/O | General-purpose input/output 40 |
| EM1A2 | 2 | | | | O | External memory interface 1 address line 2 |
| SDAB | 6 | | | | I/OD | I2C-B data open-drain bidirectional port |
| GPIO41 | 0, 4, 8, 12 | U17 | 89 | 51 | I/O | General-purpose input/output 41. For applications using the Hibernate low-power mode, this pin serves as the $\overline{\text{GPIOHIBWAKE}}$ signal. For details, see the Low Power Modes section of the System Control chapter in the *TMS320F2837xD Dual-Core Microcontrollers Technical Reference Manual*. |
| EM1A3 | 2 | | | | O | External memory interface 1 address line 3 |
| SCLB | 6 | | | | I/OD | I2C-B clock open-drain bidirectional port |
| GPIO42 | 0, 4, 8, 12 | D19 | 130 | 73 | I/O | General-purpose input/output 42 |
| SDAA | 6 | | | | I/OD | I2C-A data open-drain bidirectional port |
| SCITXDA | 15 | | | | O | SCI-A transmit data |
| USB0DM | Analog | | | | I/O | USB PHY differential data |
| GPIO43 | 0, 4, 8, 12 | C19 | 131 | 74 | I/O | General-purpose input/output 43 |
| SCLA | 6 | | | | I/OD | I2C-A clock open-drain bidirectional port |
| SCIRXDA | 15 | | | | I | SCI-A receive data |
| USB0DP | Analog | | | | I/O | USB PHY differential data |
| GPIO44 | 0, 4, 8, 12 | K18 | 113 | – | I/O | General-purpose input/output 44 |
| EM1A4 | 2 | | | | O | External memory interface 1 address line 4 |

**Table 4-1. Signal Descriptions (continued)**

| TERMINAL | | | | | I/O/Z[1] | DESCRIPTION |
|---|---|---|---|---|---|---|
| NAME | MUX POSITION | ZWT BALL NO. | PTP PIN NO. | PZP PIN NO. | | |
| GPIO45 | 0, 4, 8, 12 | K19 | 115 | – | I/O | General-purpose input/output 45 |
| EM1A5 | 2 | | | | O | External memory interface 1 address line 5 |
| GPIO46 | 0, 4, 8, 12 | E19 | 128 | – | I/O | General-purpose input/output 46 |
| EM1A6 | 2 | | | | O | External memory interface 1 address line 6 |
| SCIRXDD | 6 | | | | I | SCI-D receive data |
| GPIO47 | 0, 4, 8, 12 | E18 | 129 | – | I/O | General-purpose input/output 47 |
| EM1A7 | 2 | | | | O | External memory interface 1 address line 7 |
| SCITXDD | 6 | | | | O | SCI-D transmit data |
| GPIO48 | 0, 4, 8, 12 | R16 | 90 | – | I/O | General-purpose input/output 48 |
| OUTPUTXBAR3 | 1 | | | | O | Output 3 of the output XBAR |
| EM1A8 | 2 | | | | O | External memory interface 1 address line 8 |
| SCITXDA | 6 | | | | O | SCI-A transmit data |
| SD1_D1 | 7 | | | | I | Sigma-Delta 1 channel 1 data input |
| GPIO49 | 0, 4, 8, 12 | R17 | 93 | – | I/O | General-purpose input/output 49 |
| OUTPUTXBAR4 | 1 | | | | O | Output 4 of the output XBAR |
| EM1A9 | 2 | | | | O | External memory interface 1 address line 9 |
| SCIRXDA | 6 | | | | I | SCI-A receive data |
| SD1_C1 | 7 | | | | I | Sigma-Delta 1 channel 1 clock input |
| GPIO50 | 0, 4, 8, 12 | R18 | 94 | – | I/O | General-purpose input/output 50 |
| EQEP1A | 1 | | | | I | Enhanced QEP1 input A |
| EM1A10 | 2 | | | | O | External memory interface 1 address line 10 |
| SPISIMOC | 6 | | | | I/O | SPI-C slave in, master out |
| SD1_D2 | 7 | | | | I | Sigma-Delta 1 channel 2 data input |
| GPIO51 | 0, 4, 8, 12 | R19 | 95 | – | I/O | General-purpose input/output 51 |
| EQEP1B | 1 | | | | I | Enhanced QEP1 input B |
| EM1A11 | 2 | | | | O | External memory interface 1 address line 11 |
| SPISOMIC | 6 | | | | I/O | SPI-C slave out, master in |
| SD1_C2 | 7 | | | | I | Sigma-Delta 1 channel 2 clock input |
| GPIO52 | 0, 4, 8, 12 | P16 | 96 | – | I/O | General-purpose input/output 52 |
| EQEP1S | 1 | | | | I/O | Enhanced QEP1 strobe |
| EM1A12 | 2 | | | | O | External memory interface 1 address line 12 |
| SPICLKC | 6 | | | | I/O | SPI-C clock |
| SD1_D3 | 7 | | | | I | Sigma-Delta 1 channel 3 data input |
| GPIO53 | 0, 4, 8, 12 | P17 | 97 | – | I/O | General-purpose input/output 53 |
| EQEP1I | 1 | | | | I/O | Enhanced QEP1 index |
| EM1D31 | 2 | | | | I/O | External memory interface 1 data line 31 |
| EM2D15 | 3 | | | | I/O | External memory interface 2 data line 15 |
| $\overline{\text{SPISTEC}}$ | 6 | | | | I/O | SPI-C slave transmit enable |
| SD1_C3 | 7 | | | | I | Sigma-Delta 1 channel 3 clock input |


Copyright © 2013–2020, Texas Instruments Incorporated

**Table 4-1. Signal Descriptions (continued)**

| TERMINAL | | | | | I/O/Z[1] | DESCRIPTION |
|---|---|---|---|---|---|---|
| NAME | MUX POSITION | ZWT BALL NO. | PTP PIN NO. | PZP PIN NO. | | |
| GPIO54 | 0, 4, 8, 12 | P18 | 98 | – | I/O | General-purpose input/output 54 |
| SPISIMOA | 1 | | | | I/O | SPI-A slave in, master out |
| EM1D30 | 2 | | | | I/O | External memory interface 1 data line 30 |
| EM2D14 | 3 | | | | I/O | External memory interface 2 data line 14 |
| EQEP2A | 5 | | | | I | Enhanced QEP2 input A |
| SCITXDB | 6 | | | | O | SCI-B transmit data |
| SD1_D4 | 7 | | | | I | Sigma-Delta 1 channel 4 data input |
| GPIO55 | 0, 4, 8, 12 | P19 | 100 | – | I/O | General-purpose input/output 55 |
| SPISOMIA | 1 | | | | I/O | SPI-A slave out, master in |
| EM1D29 | 2 | | | | I/O | External memory interface 1 data line 29 |
| EM2D13 | 3 | | | | I/O | External memory interface 2 data line 13 |
| EQEP2B | 5 | | | | I | Enhanced QEP2 input B |
| SCIRXDB | 6 | | | | I | SCI-B receive data |
| SD1_C4 | 7 | | | | I | Sigma-Delta 1 channel 4 clock input |
| GPIO56 | 0, 4, 8, 12 | N16 | 101 | – | I/O | General-purpose input/output 56 |
| SPICLKA | 1 | | | | I/O | SPI-A clock |
| EM1D28 | 2 | | | | I/O | External memory interface 1 data line 28 |
| EM2D12 | 3 | | | | I/O | External memory interface 2 data line 12 |
| EQEP2S | 5 | | | | I/O | Enhanced QEP2 strobe |
| SCITXDC | 6 | | | | O | SCI-C transmit data |
| SD2_D1 | 7 | | | | I | Sigma-Delta 2 channel 1 data input |
| GPIO57 | 0, 4, 8, 12 | N18 | 102 | – | I/O | General-purpose input/output 57 |
| $\overline{\text{SPISTEA}}$ | 1 | | | | I/O | SPI-A slave transmit enable |
| EM1D27 | 2 | | | | I/O | External memory interface 1 data line 27 |
| EM2D11 | 3 | | | | I/O | External memory interface 2 data line 11 |
| EQEP2I | 5 | | | | I/O | Enhanced QEP2 index |
| SCIRXDC | 6 | | | | I | SCI-C receive data |
| SD2_C1 | 7 | | | | I | Sigma-Delta 2 channel 1 clock input |
| GPIO58 | 0, 4, 8, 12 | N17 | 103 | 52 | I/O | General-purpose input/output 58 |
| MCLKRA | 1 | | | | I/O | McBSP-A receive clock |
| EM1D26 | 2 | | | | I/O | External memory interface 1 data line 26 |
| EM2D10 | 3 | | | | I/O | External memory interface 2 data line 10 |
| OUTPUTXBAR1 | 5 | | | | O | Output 1 of the output XBAR |
| SPICLKB | 6 | | | | I/O | SPI-B clock |
| SD2_D2 | 7 | | | | I | Sigma-Delta 2 channel 2 data input |
| SPISIMOA | 15 | | | | I/O | SPI-A slave in, master out[2] |
| GPIO59 | 0, 4, 8, 12 | M16 | 104 | 53 | I/O | General-purpose input/output 59[3] |
| MFSRA | 1 | | | | I/O | McBSP-A receive frame synch |
| EM1D25 | 2 | | | | I/O | External memory interface 1 data line 25 |
| EM2D9 | 3 | | | | I/O | External memory interface 2 data line 9 |
| OUTPUTXBAR2 | 5 | | | | O | Output 2 of the output XBAR |
| $\overline{\text{SPISTEB}}$ | 6 | | | | I/O | SPI-B slave transmit enable |
| SD2_C2 | 7 | | | | I | Sigma-Delta 2 channel 2 clock input |
| SPISOMIA | 15 | | | | I/O | SPI-A slave out, master in[2] |

**Table 4-1. Signal Descriptions (continued)**

| TERMINAL | | | | | I/O/Z[1] | DESCRIPTION |
|---|---|---|---|---|---|---|
| NAME | MUX POSITION | ZWT BALL NO. | PTP PIN NO. | PZP PIN NO. | | |
| GPIO60 | 0, 4, 8, 12 | M17 | 105 | 54 | I/O | General-purpose input/output 60 |
| MCLKRB | 1 | | | | I/O | McBSP-B receive clock |
| EM1D24 | 2 | | | | I/O | External memory interface 1 data line 24 |
| EM2D8 | 3 | | | | I/O | External memory interface 2 data line 8 |
| OUTPUTXBAR3 | 5 | | | | O | Output 3 of the output XBAR |
| SPISIMOB | 6 | | | | I/O | SPI-B slave in, master out |
| SD2_D3 | 7 | | | | I | Sigma-Delta 2 channel 3 data input |
| SPICLKA | 15 | | | | I/O | SPI-A clock[2] |
| GPIO61 | 0, 4, 8, 12 | L16 | 107 | 56 | I/O | General-purpose input/output 61[3] |
| MFSRB | 1 | | | | I/O | McBSP-B receive frame synch |
| EM1D23 | 2 | | | | I/O | External memory interface 1 data line 23 |
| EM2D7 | 3 | | | | I/O | External memory interface 2 data line 7 |
| OUTPUTXBAR4 | 5 | | | | O | Output 4 of the output XBAR |
| SPISOMIB | 6 | | | | I/O | SPI-B slave out, master in |
| SD2_C3 | 7 | | | | I | Sigma-Delta 2 channel 3 clock input |
| $\overline{\text{SPISTEA}}$ | 15 | | | | I/O | SPI-A slave transmit enable[2] |
| GPIO62 | 0, 4, 8, 12 | J17 | 108 | 57 | I/O | General-purpose input/output 62 |
| SCIRXDC | 1 | | | | I | SCI-C receive data |
| EM1D22 | 2 | | | | I/O | External memory interface 1 data line 22 |
| EM2D6 | 3 | | | | I/O | External memory interface 2 data line 6 |
| EQEP3A | 5 | | | | I | Enhanced QEP3 input A |
| CANRXA | 6 | | | | I | CAN-A receive |
| SD2_D4 | 7 | | | | I | Sigma-Delta 2 channel 4 data input |
| GPIO63 | 0, 4, 8, 12 | J16 | 109 | 58 | I/O | General-purpose input/output 63 |
| SCITXDC | 1 | | | | O | SCI-C transmit data |
| EM1D21 | 2 | | | | I/O | External memory interface 1 data line 21 |
| EM2D5 | 3 | | | | I/O | External memory interface 2 data line 5 |
| EQEP3B | 5 | | | | I | Enhanced QEP3 input B |
| CANTXA | 6 | | | | O | CAN-A transmit |
| SD2_C4 | 7 | | | | I | Sigma-Delta 2 channel 4 clock input |
| SPISIMOB | 15 | | | | I/O | SPI-B slave in, master out[2] |
| GPIO64 | 0, 4, 8, 12 | L17 | 110 | 59 | I/O | General-purpose input/output 64[3] |
| EM1D20 | 2 | | | | I/O | External memory interface 1 data line 20 |
| EM2D4 | 3 | | | | I/O | External memory interface 2 data line 4 |
| EQEP3S | 5 | | | | I/O | Enhanced QEP3 strobe |
| SCIRXDA | 6 | | | | I | SCI-A receive data |
| SPISOMIB | 15 | | | | I/O | SPI-B slave out, master in[2] |
| GPIO65 | 0, 4, 8, 12 | K16 | 111 | 60 | I/O | General-purpose input/output 65 |
| EM1D19 | 2 | | | | I/O | External memory interface 1 data line 19 |
| EM2D3 | 3 | | | | I/O | External memory interface 2 data line 3 |
| EQEP3I | 5 | | | | I/O | Enhanced QEP3 index |
| SCITXDA | 6 | | | | O | SCI-A transmit data |
| SPICLKB | 15 | | | | I/O | SPI-B clock[2] |


Copyright © 2013–2020, Texas Instruments Incorporated

**Table 4-1. Signal Descriptions (continued)**

| TERMINAL | | | | | I/O/Z[1] | DESCRIPTION |
|---|---|---|---|---|---|---|
| NAME | MUX POSITION | ZWT BALL NO. | PTP PIN NO. | PZP PIN NO. | | |
| GPIO66 | 0, 4, 8, 12 | K17 | 112 | 61 | I/O | General-purpose input/output 66[3] |
| EM1D18 | 2 | | | | I/O | External memory interface 1 data line 18 |
| EM2D2 | 3 | | | | I/O | External memory interface 2 data line 2 |
| SDAB | 6 | | | | I/OD | I2C-B data open-drain bidirectional port |
| $\overline{\text{SPISTEB}}$ | 15 | | | | I/O | SPI-B slave transmit enable[2] |
| GPIO67 | 0, 4, 8, 12 | B19 | 132 | – | I/O | General-purpose input/output 67 |
| EM1D17 | 2 | | | | I/O | External memory interface 1 data line 17 |
| EM2D1 | 3 | | | | I/O | External memory interface 2 data line 1 |
| GPIO68 | 0, 4, 8, 12 | C18 | 133 | – | I/O | General-purpose input/output 68 |
| EM1D16 | 2 | | | | I/O | External memory interface 1 data line 16 |
| EM2D0 | 3 | | | | I/O | External memory interface 2 data line 0 |
| GPIO69 | 0, 4, 8, 12 | B18 | 134 | 75 | I/O | General-purpose input/output 69 |
| EM1D15 | 2 | | | | I/O | External memory interface 1 data line 15 |
| SCLB | 6 | | | | I/OD | I2C-B clock open-drain bidirectional port |
| SPISIMOC | 15 | | | | I/O | SPI-C slave in, master out[2] |
| GPIO70 | 0, 4, 8, 12 | A17 | 135 | 76 | I/O | General-purpose input/output 70[3] |
| EM1D14 | 2 | | | | I/O | External memory interface 1 data line 14 |
| CANRXA | 5 | | | | I | CAN-A receive |
| SCITXDB | 6 | | | | O | SCI-B transmit data |
| SPISOMIC | 15 | | | | I/O | SPI-C slave out, master in[2] |
| GPIO71 | 0, 4, 8, 12 | B17 | 136 | 77 | I/O | General-purpose input/output 71 |
| EM1D13 | 2 | | | | I/O | External memory interface 1 data line 13 |
| CANTXA | 5 | | | | O | CAN-A transmit |
| SCIRXDB | 6 | | | | I | SCI-B receive data |
| SPICLKC | 15 | | | | I/O | SPI-C clock[2] |
| GPIO72 | 0, 4, 8, 12 | B16 | 139 | 80 | I/O | General-purpose input/output 72.[3] This is the factory default boot mode select pin 1. |
| EM1D12 | 2 | | | | I/O | External memory interface 1 data line 12 |
| CANTXB | 5 | | | | O | CAN-B transmit |
| SCITXDC | 6 | | | | O | SCI-C transmit data |
| $\overline{\text{SPISTEC}}$ | 15 | | | | I/O | SPI-C slave transmit enable[2] |
| GPIO73 | 0, 4, 8, 12 | A16 | 140 | 81 | I/O | General-purpose input/output 73 |
| EM1D11 | 2 | | | | I/O | External memory interface 1 data line 11 |
| XCLKOUT | 3 | | | | O/Z | External clock output. This pin outputs a divided-down version of a chosen clock signal from within the device. The clock signal is chosen using the CLKSRCCTL3.XCLKOUTSEL bit field while the divide ratio is chosen using the XCLKOUTDIVSEL.XCLKOUTDIV bit field. |
| CANRXB | 5 | | | | I | CAN-B receive |
| SCIRXDC | 6 | | | | I | SCI-C receive |
| GPIO74 | 0, 4, 8, 12 | C17 | 141 | – | I/O | General-purpose input/output 74 |
| EM1D10 | 2 | | | | I/O | External memory interface 1 data line 10 |
| GPIO75 | 0, 4, 8, 12 | D16 | 142 | – | I/O | General-purpose input/output 75 |
| EM1D9 | 2 | | | | I/O | External memory interface 1 data line 9 |

**Table 4-1. Signal Descriptions (continued)**

| TERMINAL | | | | | I/O/Z[1] | DESCRIPTION |
|---|---|---|---|---|---|---|
| NAME | MUX POSITION | ZWT BALL NO. | PTP PIN NO. | PZP PIN NO. | | |
| GPIO76 | 0, 4, 8, 12 | C16 | 143 | – | I/O | General-purpose input/output 76 |
| EM1D8 | 2 | | | | I/O | External memory interface 1 data line 8 |
| SCITXDD | 6 | | | | O | SCI-D transmit data |
| GPIO77 | 0, 4, 8, 12 | A15 | 144 | – | I/O | General-purpose input/output 77 |
| EM1D7 | 2 | | | | I/O | External memory interface 1 data line 7 |
| SCIRXDD | 6 | | | | I | SCI-D receive data |
| GPIO78 | 0, 4, 8, 12 | B15 | 145 | 82 | I/O | General-purpose input/output 78 |
| EM1D6 | 2 | | | | I/O | External memory interface 1 data line 6 |
| EQEP2A | 6 | | | | I | Enhanced QEP2 input A |
| GPIO79 | 0, 4, 8, 12 | C15 | 146 | – | I/O | General-purpose input/output 79 |
| EM1D5 | 2 | | | | I/O | External memory interface 1 data line 5 |
| EQEP2B | 6 | | | | I | Enhanced QEP2 input B |
| GPIO80 | 0, 4, 8, 12 | D15 | 148 | – | I/O | General-purpose input/output 80 |
| EM1D4 | 2 | | | | I/O | External memory interface 1 data line 4 |
| EQEP2S | 6 | | | | I/O | Enhanced QEP2 strobe |
| GPIO81 | 0, 4, 8, 12 | A14 | 149 | – | I/O | General-purpose input/output 81 |
| EM1D3 | 2 | | | | I/O | External memory interface 1 data line 3 |
| EQEP2I | 6 | | | | I/O | Enhanced QEP2 index |
| GPIO82 | 0, 4, 8, 12 | B14 | 150 | – | I/O | General-purpose input/output 82 |
| EM1D2 | 2 | | | | I/O | External memory interface 1 data line 2 |
| GPIO83 | 0, 4, 8, 12 | C14 | 151 | – | I/O | General-purpose input/output 83 |
| EM1D1 | 2 | | | | I/O | External memory interface 1 data line 1 |
| GPIO84 | 0, 4, 8, 12 | A11 | 154 | 85 | I/O | General-purpose input/output 84. This is the factory default boot mode select pin 0. |
| SCITXDA | 5 | | | | O | SCI-A transmit data |
| MDXB | 6 | | | | O | McBSP-B transmit serial data |
| MDXA | 15 | | | | O | McBSP-A transmit serial data |
| GPIO85 | 0, 4, 8, 12 | B11 | 155 | 86 | I/O | General-purpose input/output 85 |
| EM1D0 | 2 | | | | I/O | External memory interface 1 data line 0 |
| SCIRXDA | 5 | | | | I | SCI-A receive data |
| MDRB | 6 | | | | I | McBSP-B receive serial data |
| MDRA | 15 | | | | I | McBSP-A receive serial data |
| GPIO86 | 0, 4, 8, 12 | C11 | 156 | 87 | I/O | General-purpose input/output 86 |
| EM1A13 | 2 | | | | O | External memory interface 1 address line 13 |
| EM1CAS | 3 | | | | O | External memory interface 1 column address strobe |
| SCITXDB | 5 | | | | O | SCI-B transmit data |
| MCLKXB | 6 | | | | I/O | McBSP-B transmit clock |
| MCLKXA | 15 | | | | I/O | McBSP-A transmit clock |
| GPIO87 | 0, 4, 8, 12 | D11 | 157 | 88 | I/O | General-purpose input/output 87 |
| EM1A14 | 2 | | | | O | External memory interface 1 address line 14 |
| EM1RAS | 3 | | | | O | External memory interface 1 row address strobe |
| SCIRXDB | 5 | | | | I | SCI-B receive data |
| MFSXB | 6 | | | | I/O | McBSP-B transmit frame synch |
| MFSXA | 15 | | | | I/O | McBSP-A transmit frame synch |


Copyright © 2013–2020, Texas Instruments Incorporated

**Table 4-1. Signal Descriptions (continued)**

| TERMINAL | | | | | I/O/Z[1] | DESCRIPTION |
|---|---|---|---|---|---|---|
| NAME | MUX POSITION | ZWT BALL NO. | PTP PIN NO. | PZP PIN NO. | | |
| GPIO88 | 0, 4, 8, 12 | C6 | 170 | – | I/O | General-purpose input/output 88 |
| EM1A15 | 2 | | | | O | External memory interface 1 address line 15 |
| EM1DQM0 | 3 | | | | O | External memory interface 1 Input/output mask for byte 0 |
| GPIO89 | 0, 4, 8, 12 | D6 | 171 | 96 | I/O | General-purpose input/output 89 |
| EM1A16 | 2 | | | | O | External memory interface 1 address line 16 |
| EM1DQM1 | 3 | | | | O | External memory interface 1 Input/output mask for byte 1 |
| SCITXDC | 6 | | | | O | SCI-C transmit data |
| GPIO90 | 0, 4, 8, 12 | A5 | 172 | 97 | I/O | General-purpose input/output 90 |
| EM1A17 | 2 | | | | O | External memory interface 1 address line 17 |
| EM1DQM2 | 3 | | | | O | External memory interface 1 Input/output mask for byte 2 |
| SCIRXDC | 6 | | | | I | SCI-C receive data |
| GPIO91 | 0, 4, 8, 12 | B5 | 173 | 98 | I/O | General-purpose input/output 91 |
| EM1A18 | 2 | | | | O | External memory interface 1 address line 18 |
| EM1DQM3 | 3 | | | | O | External memory interface 1 Input/output mask for byte 3 |
| SDAA | 6 | | | | I/OD | I2C-A data open-drain bidirectional port |
| GPIO92 | 0, 4, 8, 12 | A4 | 174 | 99 | I/O | General-purpose input/output 92 |
| EM1A19 | 2 | | | | O | External memory interface 1 address line 19 |
| EM1BA1 | 3 | | | | O | External memory interface 1 bank address 1 |
| SCLA | 6 | | | | I/OD | I2C-A clock open-drain bidirectional port |
| GPIO93 | 0, 4, 8, 12 | B4 | 175 | – | I/O | General-purpose input/output 93 |
| EM1BA0 | 3 | | | | O | External memory interface 1 bank address 0 |
| SCITXDD | 6 | | | | O | SCI-D transmit data |
| GPIO94 | 0, 4, 8, 12 | A3 | 176 | – | I/O | General-purpose input/output 94 |
| SCIRXDD | 6 | | | | I | SCI-D receive data |
| GPIO95 | 0, 4, 8, 12 | B3 | – | – | I/O | General-purpose input/output 95 |
| GPIO96 | 0, 4, 8, 12 | C3 | – | – | I/O | General-purpose input/output 96 |
| EM2DQM1 | 3 | | | | O | External memory interface 2 Input/output mask for byte 1 |
| EQEP1A | 5 | | | | I | Enhanced QEP1 input A |
| GPIO97 | 0, 4, 8, 12 | A2 | – | – | I/O | General-purpose input/output 97 |
| EM2DQM0 | 3 | | | | O | External memory interface 2 Input/output mask for byte 0 |
| EQEP1B | 5 | | | | I | Enhanced QEP1 input B |
| GPIO98 | 0, 4, 8, 12 | F1 | – | – | I/O | General-purpose input/output 98 |
| EM2A0 | 3 | | | | O | External memory interface 2 address line 0 |
| EQEP1S | 5 | | | | I/O | Enhanced QEP1 strobe |
| GPIO99 | 0, 4, 8, 12 | G1 | 17 | 14 | I/O | General-purpose input/output 99 |
| EM2A1 | 3 | | | | O | External memory interface 2 address line 1 |
| EQEP1I | 5 | | | | I/O | Enhanced QEP1 index |
| GPIO100 | 0, 4, 8, 12 | H1 | – | – | I/O | General-purpose input/output 100 |
| EM2A2 | 3 | | | | O | External memory interface 2 address line 2 |
| EQEP2A | 5 | | | | I | Enhanced QEP2 input A |
| SPISIMOC | 6 | | | | I/O | SPI-C slave in, master out |
| GPIO101 | 0, 4, 8, 12 | H2 | – | – | I/O | General-purpose input/output 101 |
| EM2A3 | 3 | | | | O | External memory interface 2 address line 3 |
| EQEP2B | 5 | | | | I | Enhanced QEP2 input B |
| SPISOMIC | 6 | | | | I/O | SPI-C slave out, master in |

Copyright © 2013–2020, Texas Instruments Incorporated

**Table 4-1. Signal Descriptions (continued)**

| TERMINAL | | | | | I/O/Z[1] | DESCRIPTION |
|---|---|---|---|---|---|---|
| NAME | MUX POSITION | ZWT BALL NO. | PTP PIN NO. | PZP PIN NO. | | |
| GPIO102 | 0, 4, 8, 12 | H3 | – | – | I/O | General-purpose input/output 102 |
| EM2A4 | 3 | | | | O | External memory interface 2 address line 4 |
| EQEP2S | 5 | | | | I/O | Enhanced QEP2 strobe |
| SPICLKC | 6 | | | | I/O | SPI-C clock |
| GPIO103 | 0, 4, 8, 12 | J1 | – | – | I/O | General-purpose input/output 103 |
| EM2A5 | 3 | | | | O | External memory interface 2 address line 5 |
| EQEP2I | 5 | | | | I/O | Enhanced QEP2 index |
| $\overline{\text{SPISTEC}}$ | 6 | | | | I/O | SPI-C slave transmit enable |
| GPIO104 | 0, 4, 8, 12 | J2 | – | – | I/O | General-purpose input/output 104 |
| SDAA | 1 | | | | I/OD | I2C-A data open-drain bidirectional port |
| EM2A6 | 3 | | | | O | External memory interface 2 address line 6 |
| EQEP3A | 5 | | | | I | Enhanced QEP3 input A |
| SCITXDD | 6 | | | | O | SCI-D transmit data |
| GPIO105 | 0, 4, 8, 12 | J3 | – | – | I/O | General-purpose input/output 105 |
| SCLA | 1 | | | | I/OD | I2C-A clock open-drain bidirectional port |
| EM2A7 | 3 | | | | O | External memory interface 2 address line 7 |
| EQEP3B | 5 | | | | I | Enhanced QEP3 input B |
| SCIRXDD | 6 | | | | I | SCI-D receive data |
| GPIO106 | 0, 4, 8, 12 | L2 | – | – | I/O | General-purpose input/output 106 |
| EM2A8 | 3 | | | | O | External memory interface 2 address line 8 |
| EQEP3S | 5 | | | | I/O | Enhanced QEP3 strobe |
| SCITXDC | 6 | | | | O | SCI-C transmit data |
| GPIO107 | 0, 4, 8, 12 | L3 | – | – | I/O | General-purpose input/output 107 |
| EM2A9 | 3 | | | | O | External memory interface 2 address line 9 |
| EQEP3I | 5 | | | | I/O | Enhanced QEP3 index |
| SCIRXDC | 6 | | | | I | SCI-C receive data |
| GPIO108 | 0, 4, 8, 12 | L4 | – | – | I/O | General-purpose input/output 108 |
| EM2A10 | 3 | | | | O | External memory interface 2 address line 10 |
| GPIO109 | 0, 4, 8, 12 | N2 | – | – | I/O | General-purpose input/output 109 |
| EM2A11 | 3 | | | | O | External memory interface 2 address line 11 |
| GPIO110 | 0, 4, 8, 12 | M2 | – | – | I/O | General-purpose input/output 110 |
| EM2WAIT | 3 | | | | I | External memory interface 2 Asynchronous SRAM WAIT |
| GPIO111 | 0, 4, 8, 12 | M4 | – | – | I/O | General-purpose input/output 111 |
| EM2BA0 | 3 | | | | O | External memory interface 2 bank address 0 |
| GPIO112 | 0, 4, 8, 12 | M3 | – | – | I/O | General-purpose input/output 112 |
| EM2BA1 | 3 | | | | O | External memory interface 2 bank address 1 |
| GPIO113 | 0, 4, 8, 12 | N4 | – | – | I/O | General-purpose input/output 113 |
| EM2CAS | 3 | | | | O | External memory interface 2 column address strobe |
| GPIO114 | 0, 4, 8, 12 | N3 | – | – | I/O | General-purpose input/output 114 |
| EM2RAS | 3 | | | | O | External memory interface 2 row address strobe |
| GPIO115 | 0, 4, 8, 12 | V12 | – | – | I/O | General-purpose input/output 115 |
| $\overline{\text{EM2CS0}}$ | 3 | | | | O | External memory interface 2 chip select 0 |
| GPIO116 | 0, 4, 8, 12 | W10 | – | – | I/O | General-purpose input/output 116 |
| $\overline{\text{EM2CS2}}$ | 3 | | | | O | External memory interface 2 chip select 2 |


Copyright © 2013–2020, Texas Instruments Incorporated

**Table 4-1. Signal Descriptions (continued)**

| TERMINAL | | | | | I/O/Z[1] | DESCRIPTION |
|---|---|---|---|---|---|---|
| NAME | MUX POSITION | ZWT BALL NO. | PTP PIN NO. | PZP PIN NO. | | |
| GPIO117 | 0, 4, 8, 12 | U12 | – | – | I/O | General-purpose input/output 117 |
| EM2SDCKE | 3 | | | | O | External memory interface 2 SDRAM clock enable |
| GPIO118 | 0, 4, 8, 12 | T12 | – | – | I/O | General-purpose input/output 118 |
| EM2CLK | 3 | | | | O | External memory interface 2 clock |
| GPIO119 | 0, 4, 8, 12 | T15 | – | – | I/O | General-purpose input/output 119 |
| EM2RNW | 3 | | | | O | External memory interface 2 read not write |
| GPIO120 | 0, 4, 8, 12 | U15 | – | – | I/O | General-purpose input/output 120 |
| $\overline{\text{EM2WE}}$ | 3 | | | | O | External memory interface 2 write enable |
| USB0PFLT | 15 | | | | I/O | USB external regulator power fault indicator |
| GPIO121 | 0, 4, 8, 12 | W16 | – | – | I/O | General-purpose input/output 121 |
| $\overline{\text{EM2OE}}$ | 3 | | | | O | External memory interface 2 output enable |
| USB0EPEN | 15 | | | | I/O | USB external regulator enable |
| GPIO122 | 0, 4, 8, 12 | T8 | – | – | I/O | General-purpose input/output 122 |
| SPISIMOC | 6 | | | | I/O | SPI-C slave in, master out |
| SD1_D1 | 7 | | | | I | Sigma-Delta 1 channel 1 data input |
| GPIO123 | 0, 4, 8, 12 | U8 | – | – | I/O | General-purpose input/output 123 |
| SPISOMIC | 6 | | | | I/O | SPI-C slave out, master in |
| SD1_C1 | 7 | | | | I | Sigma-Delta 1 channel 1 clock input |
| GPIO124 | 0, 4, 8, 12 | V8 | – | – | I/O | General-purpose input/output 124 |
| SPICLKC | 6 | | | | I/O | SPI-C clock |
| SD1_D2 | 7 | | | | I | Sigma-Delta 1 channel 2 data input |
| GPIO125 | 0, 4, 8, 12 | T9 | – | – | I/O | General-purpose input/output 125 |
| $\overline{\text{SPISTEC}}$ | 6 | | | | I/O | SPI-C slave transmit enable |
| SD1_C2 | 7 | | | | I | Sigma-Delta 1 channel 2 clock input |
| GPIO126 | 0, 4, 8, 12 | U9 | – | – | I/O | General-purpose input/output 126 |
| SD1_D3 | 7 | | | | I | Sigma-Delta 1 channel 3 data input |
| GPIO127 | 0, 4, 8, 12 | V9 | – | – | I/O | General-purpose input/output 127 |
| SD1_C3 | 7 | | | | I | Sigma-Delta 1 channel 3 clock input |
| GPIO128 | 0, 4, 8, 12 | W9 | – | – | I/O | General-purpose input/output 128 |
| SD1_D4 | 7 | | | | I | Sigma-Delta 1 channel 4 data input |
| GPIO129 | 0, 4, 8, 12 | T10 | – | – | I/O | General-purpose input/output 129 |
| SD1_C4 | 7 | | | | I | Sigma-Delta 1 channel 4 clock input |
| GPIO130 | 0, 4, 8, 12 | U10 | – | – | I/O | General-purpose input/output 130 |
| SD2_D1 | 7 | | | | I | Sigma-Delta 2 channel 1 data input |
| GPIO131 | 0, 4, 8, 12 | V10 | – | – | I/O | General-purpose input/output 131 |
| SD2_C1 | 7 | | | | I | Sigma-Delta 2 channel 1 clock input |
| GPIO132 | 0, 4, 8, 12 | W18 | – | – | I/O | General-purpose input/output 132 |
| SD2_D2 | 7 | | | | I | Sigma-Delta 2 channel 2 data input |
| GPIO133/AUXCLKIN | 0, 4, 8, 12 | G18 | 118 | – | I/O | General-purpose input/output 133. The AUXCLKIN function of this GPIO pin could be used to provide a single-ended 3.3-V level clock signal to the Auxiliary Phase-Locked Loop (AUXPLL), whose output is used for the USB module. The AUXCLKIN clock may also be used for the CAN module. |
| SD2_C2 | 7 | | | | I | Sigma-Delta 2 channel 2 clock input |

**Table 4-1. Signal Descriptions (continued)**

| TERMINAL | | | | | I/O/Z[1] | DESCRIPTION |
|---|---|---|---|---|---|---|
| NAME | MUX POSITION | ZWT BALL NO. | PTP PIN NO. | PZP PIN NO. | | |
| GPIO134 | 0, 4, 8, 12 | V18 | – | – | I/O | General-purpose input/output 134 |
| SD2_D3 | 7 | | | | I | Sigma-Delta 2 channel 3 data input |
| GPIO135 | 0, 4, 8, 12 | U18 | – | – | I/O | General-purpose input/output 135 |
| SCITXDA | 6 | | | | O | SCI-A transmit data |
| SD2_C3 | 7 | | | | I | Sigma-Delta 2 channel 3 clock input |
| GPIO136 | 0, 4, 8, 12 | T17 | – | – | I/O | General-purpose input/output 136 |
| SCIRXDA | 6 | | | | I | SCI-A receive data |
| SD2_D4 | 7 | | | | I | Sigma-Delta 2 channel 4 data input |
| GPIO137 | 0, 4, 8, 12 | T18 | – | – | I/O | General-purpose input/output 137 |
| SCITXDB | 6 | | | | O | SCI-B transmit data |
| SD2_C4 | 7 | | | | I | Sigma-Delta 2 channel 4 clock input |
| GPIO138 | 0, 4, 8, 12 | T19 | – | – | I/O | General-purpose input/output 138 |
| SCIRXDB | 6 | | | | I | SCI-B receive data |
| GPIO139 | 0, 4, 8, 12 | N19 | – | – | I/O | General-purpose input/output 139 |
| SCIRXDC | 6 | | | | I | SCI-C receive data |
| GPIO140 | 0, 4, 8, 12 | M19 | – | – | I/O | General-purpose input/output 140 |
| SCITXDC | 6 | | | | O | SCI-C transmit data |
| GPIO141 | 0, 4, 8, 12 | M18 | – | – | I/O | General-purpose input/output 141 |
| SCIRXDD | 6 | | | | I | SCI-D receive data |
| GPIO142 | 0, 4, 8, 12 | L19 | – | – | I/O | General-purpose input/output 142 |
| SCITXDD | 6 | | | | O | SCI-D transmit data |
| GPIO143 | 0, 4, 8, 12 | F18 | – | – | I/O | General-purpose input/output 143 |
| GPIO144 | 0, 4, 8, 12 | F17 | – | – | I/O | General-purpose input/output 144 |
| GPIO145 | 0, 4, 8, 12 | E17 | – | – | I/O | General-purpose input/output 145 |
| EPWM1A | 1 | | | | O | Enhanced PWM1 output A (HRPWM-capable) |
| GPIO146 | 0, 4, 8, 12 | D18 | – | – | I/O | General-purpose input/output 146 |
| EPWM1B | 1 | | | | O | Enhanced PWM1 output B (HRPWM-capable) |
| GPIO147 | 0, 4, 8, 12 | D17 | – | – | I/O | General-purpose input/output 147 |
| EPWM2A | 1 | | | | O | Enhanced PWM2 output A (HRPWM-capable) |
| GPIO148 | 0, 4, 8, 12 | D14 | – | – | I/O | General-purpose input/output 148 |
| EPWM2B | 1 | | | | O | Enhanced PWM2 output B (HRPWM-capable) |
| GPIO149 | 0, 4, 8, 12 | A13 | – | – | I/O | General-purpose input/output 149 |
| EPWM3A | 1 | | | | O | Enhanced PWM3 output A (HRPWM-capable) |
| GPIO150 | 0, 4, 8, 12 | B13 | – | – | I/O | General-purpose input/output 150 |
| EPWM3B | 1 | | | | O | Enhanced PWM3 output B (HRPWM-capable) |
| GPIO151 | 0, 4, 8, 12 | C13 | – | – | I/O | General-purpose input/output 151 |
| EPWM4A | 1 | | | | O | Enhanced PWM4 output A (HRPWM-capable) |
| GPIO152 | 0, 4, 8, 12 | D13 | – | – | I/O | General-purpose input/output 152 |
| EPWM4B | 1 | | | | O | Enhanced PWM4 output B (HRPWM-capable) |
| GPIO153 | 0, 4, 8, 12 | A12 | – | – | I/O | General-purpose input/output 153 |
| EPWM5A | 1 | | | | O | Enhanced PWM5 output A (HRPWM-capable) |
| GPIO154 | 0, 4, 8, 12 | B12 | – | – | I/O | General-purpose input/output 154 |
| EPWM5B | 1 | | | | O | Enhanced PWM5 output B (HRPWM-capable) |
| GPIO155 | 0, 4, 8, 12 | C12 | – | – | I/O | General-purpose input/output 155 |
| EPWM6A | 1 | | | | O | Enhanced PWM6 output A (HRPWM-capable) |


Copyright © 2013–2020, Texas Instruments Incorporated

**Table 4-1. Signal Descriptions (continued)**

| TERMINAL | | | | | I/O/Z[1] | DESCRIPTION |
|---|---|---|---|---|---|---|
| NAME | MUX POSITION | ZWT BALL NO. | PTP PIN NO. | PZP PIN NO. | | |
| GPIO156<br>EPWM6B | 0, 4, 8, 12<br>1 | D12 | – | – | I/O<br>O | General-purpose input/output 156<br>Enhanced PWM6 output B (HRPWM-capable) |
| GPIO157<br>EPWM7A | 0, 4, 8, 12<br>1 | B10 | – | – | I/O<br>O | General-purpose input/output 157<br>Enhanced PWM7 output A (HRPWM-capable) |
| GPIO158<br>EPWM7B | 0, 4, 8, 12<br>1 | C10 | – | – | I/O<br>O | General-purpose input/output 158<br>Enhanced PWM7 output B (HRPWM-capable) |
| GPIO159<br>EPWM8A | 0, 4, 8, 12<br>1 | D10 | – | – | I/O<br>O | General-purpose input/output 159<br>Enhanced PWM8 output A (HRPWM-capable) |
| GPIO160<br>EPWM8B | 0, 4, 8, 12<br>1 | B9 | – | – | I/O<br>O | General-purpose input/output 160<br>Enhanced PWM8 output B (HRPWM-capable) |
| GPIO161<br>EPWM9A | 0, 4, 8, 12<br>1 | C9 | – | – | I/O<br>O | General-purpose input/output 161<br>Enhanced PWM9 output A |
| GPIO162<br>EPWM9B | 0, 4, 8, 12<br>1 | D9 | – | – | I/O<br>O | General-purpose input/output 162<br>Enhanced PWM9 output B |
| GPIO163<br>EPWM10A | 0, 4, 8, 12<br>1 | A8 | – | – | I/O<br>O | General-purpose input/output 163<br>Enhanced PWM10 output A |
| GPIO164<br>EPWM10B | 0, 4, 8, 12<br>1 | B8 | – | – | I/O<br>O | General-purpose input/output 164<br>Enhanced PWM10 output B |
| GPIO165<br>EPWM11A | 0, 4, 8, 12<br>1 | C5 | – | – | I/O<br>O | General-purpose input/output 165<br>Enhanced PWM11 output A |
| GPIO166<br>EPWM11B | 0, 4, 8, 12<br>1 | D5 | – | – | I/O<br>O | General-purpose input/output 166<br>Enhanced PWM11 output B |
| GPIO167<br>EPWM12A | 0, 4, 8, 12<br>1 | C4 | – | – | I/O<br>O | General-purpose input/output 167<br>Enhanced PWM12 output A |
| GPIO168<br>EPWM12B | 0, 4, 8, 12<br>1 | D4 | – | – | I/O<br>O | General-purpose input/output 168<br>Enhanced PWM12 output B |
| **RESET** | | | | | | |
| $\overline{\text{XRS}}$ | | F19 | 124 | 69 | I/OD | Device Reset (in) and Watchdog Reset (out). The devices have a built-in power-on reset (POR) circuit. During a power-on condition, this pin is driven low by the device. An external circuit may also drive this pin to assert a device reset. This pin is also driven low by the MCU when a watchdog reset or NMI watchdog reset occurs. During watchdog reset, the $\overline{\text{XRS}}$ pin is driven low for the watchdog reset duration of 512 OSCCLK cycles. A resistor with a value from 2.2 kΩ to 10 kΩ should be placed between $\overline{\text{XRS}}$ and $V_{DDIO}$. If a capacitor is placed between $\overline{\text{XRS}}$ and $V_{SS}$ for noise filtering, it should be 100 nF or smaller. These values will allow the watchdog to properly drive the $\overline{\text{XRS}}$ pin to $V_{OL}$ within 512 OSCCLK cycles when the watchdog reset is asserted. The output buffer of this pin is an open drain with an internal pullup. If this pin is driven by an external device, it should be done using an open-drain device. |

**Table 4-1. Signal Descriptions (continued)**

| TERMINAL | | | | | I/O/Z[1] | DESCRIPTION |
|---|---|---|---|---|---|---|
| NAME | MUX POSITION | ZWT BALL NO. | PTP PIN NO. | PZP PIN NO. | | |
| **CLOCKS** | | | | | | |
| X1 | | G19 | 123 | 68 | I | On-chip crystal-oscillator input. To use this oscillator, a quartz crystal must be connected across X1 and X2. If this pin is not used, it must be tied to GND.<br>This pin can also be used to feed a single-ended 3.3-V level clock. In this case, X2 is a No Connect (NC). |
| X2 | | J19 | 121 | 66 | O | On-chip crystal-oscillator output. A quartz crystal may be connected across X1 and X2. If X2 is not used, it must be left unconnected. |
| **NO CONNECT** | | | | | | |
| NC | | H4 | – | – | | No connect. BGA ball is electrically open and not connected to the die. |
| **JTAG** | | | | | | |
| TCK | | V15 | 81 | 50 | I | JTAG test clock with internal pullup (see Section 5.6) |
| TDI | | W13 | 77 | 46 | I | JTAG test data input (TDI) with internal pullup. TDI is clocked into the selected register (instruction or data) on a rising edge of TCK. |
| TDO | | W15 | 78 | 47 | O/Z | JTAG scan out, test data output (TDO). The contents of the selected register (instruction or data) are shifted out of TDO on the falling edge of TCK.[3] |
| TMS | | W14 | 80 | 49 | I | JTAG test-mode select (TMS) with internal pullup. This serial control input is clocked into the TAP controller on the rising edge of TCK. |
| $\overline{\text{TRST}}$ | | V14 | 79 | 48 | I | JTAG test reset with internal pulldown. $\overline{\text{TRST}}$, when driven high, gives the scan system control of the operations of the device. If this signal is driven low, the device operates in its functional mode, and the test reset signals are ignored. NOTE: $\overline{\text{TRST}}$ must be maintained low at all times during normal device operation. An external pulldown resistor is required on this pin. The value of this resistor should be based on drive strength of the debugger pods applicable to the design. A 2.2-kΩ or smaller resistor generally offers adequate protection. The value of the resistor is application-specific. TI recommends that each target board be validated for proper operation of the debugger and the application. This pin has an internal 50-ns (nominal) glitch filter. |
| **INTERNAL VOLTAGE REGULATOR CONTROL** | | | | | | |
| VREGENZ | | J18 | 119 | 64 | I | Internal voltage regulator enable with internal pulldown. The internal VREG is not supported and must be disabled. Connect VREGENZ to $V_{DDIO}$. |


Copyright © 2013–2020, Texas Instruments Incorporated

**Table 4-1. Signal Descriptions (continued)**

| TERMINAL | | | | | I/O/Z[1] | DESCRIPTION |
|---|---|---|---|---|---|---|
| NAME | MUX POSITION | ZWT BALL NO. | PTP PIN NO. | PZP PIN NO. | | |
| ANALOG, DIGITAL, AND I/O POWER | | | | | | |
| $V_{DD}$ | | E9 | 16 | 16 | | 1.2-V digital logic power pins. TI recommends placing a decoupling capacitor near each $V_{DD}$ pin with a minimum total capacitance of approximately 20 uF. The exact value of the decoupling capacitance should be determined by your system voltage regulation solution. |
| | | E11 | 21 | 39 | | |
| | | F9 | 61 | 45 | | |
| | | F11 | 76 | 63 | | |
| | | G14 | 117 | 71 | | |
| | | G15 | 126 | 78 | | |
| | | J14 | 137 | 84 | | |
| | | J15 | 153 | 89 | | |
| | | K5 | 158 | 95 | | |
| | | K6 | 169 | – | | |
| | | P10 | – | – | | |
| | | P13 | – | – | | |
| | | R10 | – | – | | |
| | | R13 | – | – | | |
| $V_{DD3VFL}$ | | R11 | 72 | 41 | | 3.3-V Flash power pin. Place a minimum 0.1-µF decoupling capacitor on each pin. |
| | | R12 | – | – | | |
| $V_{DDA}$ | | P6 | 36 | 18 | | 3.3-V analog power pins. Place a minimum 2.2-µF decoupling capacitor to $V_{SSA}$ on each pin. |
| | | R6 | 54 | 38 | | |

**Table 4-1. Signal Descriptions (continued)**

| TERMINAL | | | | | I/O/Z[1] | DESCRIPTION |
|---|---|---|---|---|---|---|
| NAME | MUX POSITION | ZWT BALL NO. | PTP PIN NO. | PZP PIN NO. | | |
| $V_{DDIO}$ | | A9 | 3 | 2 | | 3.3-V digital I/O power pins. Place a minimum 0.1-µF decoupling capacitor on each pin. The exact value of the decoupling capacitance should be determined by your system voltage regulation solution. |
| | | A18 | 11 | 10 | | |
| | | B1 | 15 | 15 | | |
| | | E7 | 20 | 40 | | |
| | | E10 | 26 | 44 | | |
| | | E13 | 62 | 55 | | |
| | | E16 | 68 | 62 | | |
| | | F4 | 75 | 72 | | |
| | | F7 | 82 | 79 | | |
| | | F10 | 88 | 83 | | |
| | | F13 | 91 | 90 | | |
| | | F16 | 99 | 94 | | |
| | | G4 | 106 | – | | |
| | | G5 | 114 | – | | |
| | | G6 | 116 | – | | |
| | | H5 | 127 | – | | |
| | | H6 | 138 | – | | |
| | | L14 | 147 | – | | |
| | | L15 | 152 | – | | |
| | | M1 | 159 | – | | |
| | | M5 | 168 | – | | |
| | | M6 | – | – | | |
| | | N14 | – | – | | |
| | | N15 | – | – | | |
| | | P9 | – | – | | |
| | | R9 | – | – | | |
| | | V19 | – | – | | |
| | | W8 | – | – | | |
| $V_{DDOSC}$ | | H16 | 120 | 65 | | Power pins for the 3.3-V on-chip crystal oscillator (X1 and X2) and the two zero-pin internal oscillators (INTOSC). Place a 0.1-µF (minimum) decoupling capacitor on each pin. |
| | | H17 | 125 | 70 | | |


Copyright © 2013–2020, Texas Instruments Incorporated

**Table 4-1. Signal Descriptions (continued)**

| TERMINAL | | | | | I/O/Z[1] | DESCRIPTION |
|---|---|---|---|---|---|---|
| NAME | MUX POSITION | ZWT BALL NO. | PTP PIN NO. | PZP PIN NO. | | |
| $V_{SS}$ | | A1 | PWR PAD | PWR PAD | | Device ground. For Quad Flatpacks (QFPs), the PowerPAD on the bottom of the package must be soldered to the ground plane of the PCB. |
| | | A10 | | | | |
| | | A19 | | | | |
| | | E5 | | | | |
| | | E6 | | | | |
| | | E8 | | | | |
| | | E12 | | | | |
| | | E14 | | | | |
| | | E15 | | | | |
| | | F5 | | | | |
| | | F6 | | | | |
| | | F8 | | | | |
| | | F12 | | | | |
| | | F14 | | | | |
| | | F15 | | | | |
| | | G16 | | | | |
| | | G17 | | | | |
| | | H8 | | | | |
| | | H9 | | | | |
| | | H10 | | | | |
| | | H11 | | | | |
| | | H12 | | | | |
| | | H14 | | | | |
| | | H15 | | | | |
| | | J5 | | | | |
| | | J6 | | | | |
| | | J8 | | | | |
| | | J9 | | | | |
| | | J10 | | | | |
| | | J11 | | | | |
| | | J12 | | | | |
| | | K8 | | | | |
| | | K9 | | | | |
| | | K10 | | | | |
| | | K11 | | | | |
| | | K12 | | | | |
| | | K14 | | | | |
| | | K15 | | | | |
| | | L5 | | | | |
| | | L6 | | | | |
| | | L8 | | | | |
| | | L9 | | | | |

**Table 4-1. Signal Descriptions (continued)**

| TERMINAL | | | | | I/O/Z[1] | DESCRIPTION |
|---|---|---|---|---|---|---|
| NAME | MUX POSITION | ZWT BALL NO. | PTP PIN NO. | PZP PIN NO. | | |
| $V_{SS}$ | | L10 | PWR PAD | PWR PAD | | Device ground. For Quad Flatpacks (QFPs), the PowerPAD on the bottom of the package must be soldered to the ground plane of the PCB. |
| | | L11 | | | | |
| | | L12 | | | | |
| | | L18 | | | | |
| | | M8 | | | | |
| | | M9 | | | | |
| | | M10 | | | | |
| | | M11 | | | | |
| | | M12 | | | | |
| | | M14 | | | | |
| | | M15 | | | | |
| | | N1 | | | | |
| | | N5 | | | | |
| | | N6 | | | | |
| | | P7 | | | | |
| | | P8 | | | | |
| | | P11 | | | | |
| | | P12 | | | | |
| | | P14 | | | | |
| | | P15 | | | | |
| | | R7 | | | | |
| | | R8 | | | | |
| | | R14 | | | | |
| | | R15 | | | | |
| | | W7 | | | | |
| | | W19 | | | | |
| $V_{SSOSC}$ | | H18 | 122 | 67 | | Crystal oscillator (X1 and X2) ground pin. When using an external crystal, do not connect this pin to the board ground. Instead, connect it to the ground reference of the external crystal oscillator circuit.<br>If an external crystal is not used, this pin may be connected to the board ground. |
| | | H19 | – | – | | |
| $V_{SSA}$ | | P1 | 34 | 17 | | Analog ground.<br>On the PZP package, pin 17 is double-bonded to $V_{SSA}$ and $V_{REFLOA}$. This pin must be connect to $V_{SSA}$. |
| | | P5 | 52 | 35 | | |
| | | R5 | – | 36 | | |
| | | V7 | – | – | | |
| | | W1 | – | – | | |


Copyright © 2013–2020, Texas Instruments Incorporated

**Table 4-1. Signal Descriptions (continued)**

| TERMINAL | | | | | I/O/Z[1] | DESCRIPTION |
|---|---|---|---|---|---|---|
| NAME | MUX POSITION | ZWT BALL NO. | PTP PIN NO. | PZP PIN NO. | | |
| SPECIAL FUNCTIONS | | | | | | |
| ERRORSTS | | U19 | 92 | – | O | Error status output. This pin has an internal pulldown. |
| TEST PINS | | | | | | |
| FLT1 | | W12 | 73 | 42 | I/O | Flash test pin 1. Reserved for TI. Must be left unconnected. |
| FLT2 | | V13 | 74 | 43 | I/O | Flash test pin 2. Reserved for TI. Must be left unconnected. |

(1) I = Input, O = Output, OD = Open Drain, Z = High Impedance

(2) High-Speed SPI-enabled GPIO mux option. This pin mux option is required when using the SPI in High-Speed Mode (HS_MODE = 1 in SPICCR). This mux option is still available when not using the SPI in High-Speed Mode (HS_MODE = 0 in SPICCR).

(3) This pin has output impedance that can be as low as 22 Ω. This output could have fast edges and ringing depending on the system PCB characteristics. If this is a concern, the user should take precautions such as adding a 39Ω (10% tolerance) series termination resistor or implement some other termination scheme. It is also recommended that a system-level signal integrity analysis be performed with the provided IBIS models. The termination is not required if this pin is used for input function.

## 4.3 Pins With Internal Pullup and Pulldown

Some pins on the device have internal pullups or pulldowns. Table 4-2 lists the pull direction and when it is active. The pullups on GPIO pins are disabled by default and can be enabled through software. In order to avoid any floating unbonded inputs, the Boot ROM will enable internal pullups on GPIO pins that are not bonded out in a particular package. Other pins noted in Table 4-2 with pullups and pulldowns are always on and cannot be disabled.

**Table 4-2. Pins With Internal Pullup and Pulldown**

| PIN | RESET ($\overline{XRS}$ = 0) | DEVICE BOOT | APPLICATION SOFTWARE |
|---|---|---|---|
| GPIOx | Pullup disabled | Pullup disabled[1] | Pullup enable is application-defined |
| $\overline{TRST}$ | Pulldown active | | |
| TCK | Pullup active | | |
| TMS | Pullup active | | |
| TDI | Pullup active | | |
| $\overline{XRS}$ | Pullup active | | |
| VREGENZ | Pulldown active | | |
| ERRORSTS | Pulldown active | | |
| Other pins | No pullup or pulldown present | | |

(1) Pins not bonded out in a given package will have the internal pullups enabled by the Boot ROM.

## 4.4 Pin Multiplexing

### 4.4.1 GPIO Muxed Pins

Table 4-3 shows the GPIO muxed pins. The default for each pin is the GPIO function, secondary functions can be selected by setting both the GPyGMUXn.GPIOz and GPyMUXn.GPIOz register bits. The GPyGMUXn register should be configured prior to the GPyMUXn to avoid transient pulses on GPIO's from alternate mux selections. Columns not shown and blank cells are reserved GPIO Mux settings.

**Table 4-3. GPIO Muxed Pins(1)(2)**

| | GPIO Mux Selection | | | | | | | |
|---|---|---|---|---|---|---|---|---|
| **GPIO Index** | **0, 4, 8, 12** | **1** | **2** | **3** | **5** | **6** | **7** | **15** |
| **GPyGMUXn. GPIOz =** | **00b, 01b, 10b, 11b** | **00b** | | | **01b** | | | **11b** |
| **GPyMUXn. GPIOz =** | **00b** | **01b** | **10b** | **11b** | **01b** | **10b** | **11b** | **11b** |
| | GPIO0 | EPWM1A (O) | | | | SDAA (I/OD) | | |
| | GPIO1 | EPWM1B (O) | | MFSRB (I/O) | | SCLA (I/OD) | | |
| | GPIO2 | EPWM2A (O) | | | OUTPUTXBAR1 (O) | SDAB (I/OD) | | |
| | GPIO3 | EPWM2B (O) | OUTPUTXBAR2 (O) | MCLKRB (I/O) | OUTPUTXBAR2 (O) | SCLB (I/OD) | | |
| | GPIO4 | EPWM3A (O) | | | OUTPUTXBAR3 (O) | CANTXA (O) | | |
| | GPIO5 | EPWM3B (O) | MFSRA (I/O) | OUTPUTXBAR3 (O) | | CANRXA (I) | | |
| | GPIO6 | EPWM4A (O) | OUTPUTXBAR4 (O) | EXTSYNCOUT (O) | EQEP3A (I) | CANTXB (O) | | |
| | GPIO7 | EPWM4B (O) | MCLKRA (I/O) | OUTPUTXBAR5 (O) | EQEP3B (I) | CANRXB (I) | | |
| | GPIO8 | EPWM5A (O) | CANTXB (O) | ADCSOCAO (O) | EQEP3S (I/O) | SCITXDA (O) | | |
| | GPIO9 | EPWM5B (O) | SCITXDB (O) | OUTPUTXBAR6 (O) | EQEP3I (I/O) | SCIRXDA (I) | | |
| | GPIO10 | EPWM6A (O) | CANRXB (I) | ADCSOCBO (O) | EQEP1A (I) | SCITXDB (O) | | UPP-WAIT (I/O) |
| | GPIO11 | EPWM6B (O) | SCIRXDB (I) | OUTPUTXBAR7 (O) | EQEP1B (I) | SCIRXDB (I) | | UPP-START (I/O) |
| | GPIO12 | EPWM7A (O) | CANTXB (O) | MDXB (O) | EQEP1S (I/O) | SCITXDC (O) | | UPP-ENA (I/O) |
| | GPIO13 | EPWM7B (O) | CANRXB (I) | MDRB (I) | EQEP1I (I/O) | SCIRXDC (I) | | UPP-D7 (I/O) |
| | GPIO14 | EPWM8A (O) | SCITXDB (O) | MCLKXB (I/O) | | OUTPUTXBAR3 (O) | | UPP-D6 (I/O) |
| | GPIO15 | EPWM8B (O) | SCIRXDB (I) | MFSXB (I/O) | | OUTPUTXBAR4 (O) | | UPP-D5 (I/O) |
| | GPIO16 | SPISIMOA (I/O) | CANTXB (O) | OUTPUTXBAR7 (O) | EPWM9A (O) | | SD1_D1 (I) | UPP-D4 (I/O) |
| | GPIO17 | SPISOMIA (I/O) | CANRXB (I) | OUTPUTXBAR8 (O) | EPWM9B (O) | | SD1_C1 (I) | UPP-D3 (I/O) |
| | GPIO18 | SPICLKA (I/O) | SCITXDB (O) | CANRXA (I) | EPWM10A (O) | | SD1_D2 (I) | UPP-D2 (I/O) |
| | GPIO19 | $\overline{\text{SPISTEA}}$ (I/O) | SCIRXDB (I) | CANTXA (O) | EPWM10B (O) | | SD1_C2 (I) | UPP-D1 (I/O) |
| | GPIO20 | EQEP1A (I) | MDXA (O) | CANTXB (O) | EPWM11A (O) | | SD1_D3 (I) | UPP-D0 (I/O) |
| | GPIO21 | EQEP1B (I) | MDRA (I) | CANRXB (I) | EPWM11B (O) | | SD1_C3 (I) | UPP-CLK (I/O) |
| | GPIO22 | EQEP1S (I/O) | MCLKXA (I/O) | SCITXDB (O) | EPWM12A (O) | SPICLKB (I/O) | SD1_D4 (I) | |
| | GPIO23 | EQEP1I (I/O) | MFSXA (I/O) | SCIRXDB (I) | EPWM12B (O) | $\overline{\text{SPISTEB}}$ (I/O) | SD1_C4 (I) | |
| | GPIO24 | OUTPUTXBAR1 (O) | EQEP2A (I) | MDXB (O) | | SPISIMOB (I/O) | SD2_D1 (I) | |
| | GPIO25 | OUTPUTXBAR2 (O) | EQEP2B (I) | MDRB (I) | | SPISOMIB (I/O) | SD2_C1 (I) | |
| | GPIO26 | OUTPUTXBAR3 (O) | EQEP2I (I/O) | MCLKXB (I/O) | OUTPUTXBAR3 (O) | SPICLKB (I/O) | SD2_D2 (I) | |
| | GPIO27 | OUTPUTXBAR4 (O) | EQEP2S (I/O) | MFSXB (I/O) | OUTPUTXBAR4 (O) | $\overline{\text{SPISTEB}}$ (I/O) | SD2_C2 (I) | |
| | GPIO28 | SCIRXDA (I) | $\overline{\text{EM1CS4}}$ (O) | | OUTPUTXBAR5 (O) | EQEP3A (I) | SD2_D3 (I) | |
| | GPIO29 | SCITXDA (O) | EM1SDCKE (O) | | OUTPUTXBAR6 (O) | EQEP3B (I) | SD2_C3 (I) | |
| | GPIO30 | CANRXA (I) | EM1CLK (O) | | OUTPUTXBAR7 (O) | EQEP3S (I/O) | SD2_D4 (I) | |
| | GPIO31 | CANTXA (O) | $\overline{\text{EM1WE}}$ (O) | | OUTPUTXBAR8 (O) | EQEP3I (I/O) | SD2_C4 (I) | |
| | GPIO32 | SDAA (I/OD) | $\overline{\text{EM1CS0}}$ (O) | | | | | |
| | GPIO33 | SCLA (I/OD) | EM1RNW (O) | | | | | |
| | GPIO34 | OUTPUTXBAR1 (O) | $\overline{\text{EM1CS2}}$ (O) | | | SDAB (I/OD) | | |
| | GPIO35 | SCIRXDA (I) | $\overline{\text{EM1CS3}}$ (O) | | | SCLB (I/OD) | | |
| | GPIO36 | SCITXDA (O) | EM1WAIT (I) | | | CANRXA (I) | | |
| | GPIO37 | OUTPUTXBAR2 (O) | $\overline{\text{EM1OE}}$ (O) | | | CANTXA (O) | | |
| | GPIO38 | | EM1A0 (O) | | SCITXDC (O) | CANTXB (O) | | |
| | GPIO39 | | EM1A1 (O) | | SCIRXDC (I) | CANRXB (I) | | |

(1) I = Input, O = Output, OD = Open Drain
(2) GPIO Index settings of 9, 10, 11, 13, and 14 are reserved.


Copyright © 2013–2020, Texas Instruments Incorporated

## Table 4-3. GPIO Muxed Pins[(1)(2)] (continued)

| | GPIO Mux Selection | | | | | | | |
|---|---|---|---|---|---|---|---|---|
| **GPIO Index** | **0, 4, 8, 12** | **1** | **2** | **3** | **5** | **6** | **7** | **15** |
| **GPyGMUXn. GPIOz =** | **00b, 01b, 10b, 11b** | **00b** | | | **01b** | | | **11b** |
| **GPyMUXn. GPIOz =** | **00b** | **01b** | **10b** | **11b** | **01b** | **10b** | **11b** | **11b** |
| | GPIO40 | | EM1A2 (O) | | | SDAB (I/OD) | | |
| | GPIO41 | | EM1A3 (O) | | | SCLB (I/OD) | | |
| | GPIO42 | | | | | SDAA (I/OD) | | SCITXDA (O) |
| | GPIO43 | | | | | SCLA (I/OD) | | SCIRXDA (I) |
| | GPIO44 | | EM1A4 (O) | | | | | |
| | GPIO45 | | EM1A5 (O) | | | | | |
| | GPIO46 | | EM1A6 (O) | | | SCIRXDD (I) | | |
| | GPIO47 | | EM1A7 (O) | | | SCITXDD (O) | | |
| | GPIO48 | OUTPUTXBAR3 (O) | EM1A8 (O) | | | SCITXDA (O) | SD1_D1 (I) | |
| | GPIO49 | OUTPUTXBAR4 (O) | EM1A9 (O) | | | SCIRXDA (I) | SD1_C1 (I) | |
| | GPIO50 | EQEP1A (I) | EM1A10 (O) | | | SPISIMOC (I/O) | SD1_D2 (I) | |
| | GPIO51 | EQEP1B (I) | EM1A11 (O) | | | SPISOMIC (I/O) | SD1_C2 (I) | |
| | GPIO52 | EQEP1S (I/O) | EM1A12 (O) | | | SPICLKC (I/O) | SD1_D3 (I) | |
| | GPIO53 | EQEP1I (I/O) | EM1D31 (I/O) | EM2D15 (I/O) | | $\overline{\text{SPISTEC}}$ (I/O) | SD1_C3 (I) | |
| | GPIO54 | SPISIMOA (I/O) | EM1D30 (I/O) | EM2D14 (I/O) | EQEP2A (I) | SCITXDB (O) | SD1_D4 (I) | |
| | GPIO55 | SPISOMIA (I/O) | EM1D29 (I/O) | EM2D13 (I/O) | EQEP2B (I) | SCIRXDB (I) | SD1_C4 (I) | |
| | GPIO56 | SPICLKA (I/O) | EM1D28 (I/O) | EM2D12 (I/O) | EQEP2S (I/O) | SCITXDC (O) | SD2_D1 (I) | |
| | GPIO57 | $\overline{\text{SPISTEA}}$ (I/O) | EM1D27 (I/O) | EM2D11 (I/O) | EQEP2I (I/O) | SCIRXDC (I) | SD2_C1 (I) | |
| | GPIO58 | MCLKRA (I/O) | EM1D26 (I/O) | EM2D10 (I/O) | OUTPUTXBAR1 (O) | SPICLKB (I/O) | SD2_D2 (I) | SPISIMOA[(3)] (I/O) |
| | GPIO59 | MFSRA (I/O) | EM1D25 (I/O) | EM2D9 (I/O) | OUTPUTXBAR2 (O) | $\overline{\text{SPISTEB}}$ (I/O) | SD2_C2 (I) | SPISOMIA[(3)] (I/O) |
| | GPIO60 | MCLKRB (I/O) | EM1D24 (I/O) | EM2D8 (I/O) | OUTPUTXBAR3 (O) | SPISIMOB (I/O) | SD2_D3 (I) | SPICLKA[(3)] (I/O) |
| | GPIO61 | MFSRB (I/O) | EM1D23 (I/O) | EM2D7 (I/O) | OUTPUTXBAR4 (O) | SPISOMIB (I/O) | SD2_C3 (I) | $\overline{\text{SPISTEA}}$[(3)] (I/O) |
| | GPIO62 | SCIRXDC (I) | EM1D22 (I/O) | EM2D6 (I/O) | EQEP3A (I) | CANRXA (I) | SD2_D4 (I) | |
| | GPIO63 | SCITXDC (O) | EM1D21 (I/O) | EM2D5 (I/O) | EQEP3B (I) | CANTXA (O) | SD2_C4 (I) | SPISIMOB[(3)] (I/O) |
| | GPIO64 | | EM1D20 (I/O) | EM2D4 (I/O) | EQEP3S (I/O) | SCIRXDA (I) | | SPISOMIB[(3)] (I/O) |
| | GPIO65 | | EM1D19 (I/O) | EM2D3 (I/O) | EQEP3I (I/O) | SCITXDA (O) | | SPICLKB[(3)] (I/O) |
| | GPIO66 | | EM1D18 (I/O) | EM2D2 (I/O) | | SDAB (I/OD) | | $\overline{\text{SPISTEB}}$[(3)] (I/O) |
| | GPIO67 | | EM1D17 (I/O) | EM2D1 (I/O) | | | | |
| | GPIO68 | | EM1D16 (I/O) | EM2D0 (I/O) | | | | |
| | GPIO69 | | EM1D15 (I/O) | | | SCLB (I/OD) | | SPISIMOC[(3)] (I/O) |
| | GPIO70 | | EM1D14 (I/O) | | CANRXA (I) | SCITXDB (O) | | SPISOMIC[(3)] (I/O) |
| | GPIO71 | | EM1D13 (I/O) | | CANTXA (O) | SCIRXDB (I) | | SPICLKC[(3)] (I/O) |
| | GPIO72 | | EM1D12 (I/O) | | CANTXB (O) | SCITXDC (O) | | $\overline{\text{SPISTEC}}$[(3)] (I/O) |
| | GPIO73 | | EM1D11 (I/O) | XCLKOUT (O) | CANRXB (I) | SCIRXDC (I) | | |
| | GPIO74 | | EM1D10 (I/O) | | | | | |
| | GPIO75 | | EM1D9 (I/O) | | | | | |
| | GPIO76 | | EM1D8 (I/O) | | | SCITXDD (O) | | |
| | GPIO77 | | EM1D7 (I/O) | | | SCIRXDD (I) | | |
| | GPIO78 | | EM1D6 (I/O) | | | EQEP2A (I) | | |
| | GPIO79 | | EM1D5 (I/O) | | | EQEP2B (I) | | |
| | GPIO80 | | EM1D4 (I/O) | | | EQEP2S (I/O) | | |
| | GPIO81 | | EM1D3 (I/O) | | | EQEP2I (I/O) | | |
| | GPIO82 | | EM1D2 (I/O) | | | | | |
| | GPIO83 | | EM1D1 (I/O) | | | | | |
| | GPIO84 | | | | SCITXDA (O) | MDXB (O) | | MDXA (O) |
| | GPIO85 | | EM1D0 (I/O) | | SCIRXDA (I) | MDRB (I) | | MDRA (I) |
| | GPIO86 | | EM1A13 (O) | EM1CAS (O) | SCITXDB (O) | MCLKXB (I/O) | | MCLKXA (I/O) |
| | GPIO87 | | EM1A14 (O) | EM1RAS (O) | SCIRXDB (I) | MFSXB (I/O) | | MFSXA (I/O) |
| | GPIO88 | | EM1A15 (O) | EM1DQM0 (O) | | | | |
| | GPIO89 | | EM1A16 (O) | EM1DQM1 (O) | | SCITXDC (O) | | |

(3) High-Speed SPI-enabled GPIO mux option. This pin mux option is required when using the SPI in High-Speed Mode (HS_MODE = 1 in SPICCR). This mux option is still available when not using the SPI in High-Speed Mode (HS_MODE = 0 in SPICCR).

Copyright © 2013–2020, Texas Instruments Incorporated

## Table 4-3. GPIO Muxed Pins[(1)(2)] (continued)

| | GPIO Mux Selection | | | | | | | |
|---|---|---|---|---|---|---|---|---|
| **GPIO Index** | **0, 4, 8, 12** | **1** | **2** | **3** | **5** | **6** | **7** | **15** |
| **GPyGMUXn. GPIOz =** | **00b, 01b, 10b, 11b** | **00b** | | | **01b** | | | **11b** |
| **GPyMUXn. GPIOz =** | **00b** | **01b** | **10b** | **11b** | **01b** | **10b** | **11b** | **11b** |
| | GPIO90 | | EM1A17 (O) | EM1DQM2 (O) | | SCIRXDC (I) | | |
| | GPIO91 | | EM1A18 (O) | EM1DQM3 (O) | | SDAA (I/OD) | | |
| | GPIO92 | | EM1A19 (O) | EM1BA1 (O) | | SCLA (I/OD) | | |
| | GPIO93 | | | EM1BA0 (O) | | SCITXDD (O) | | |
| | GPIO94 | | | | | SCIRXDD (I) | | |
| | GPIO95 | | | | | | | |
| | GPIO96 | | | EM2DQM1 (O) | EQEP1A (I) | | | |
| | GPIO97 | | | EM2DQM0 (O) | EQEP1B (I) | | | |
| | GPIO98 | | | EM2A0 (O) | EQEP1S (I/O) | | | |
| | GPIO99 | | | EM2A1 (O) | EQEP1I (I/O) | | | |
| | GPIO100 | | | EM2A2 (O) | EQEP2A (I) | SPISIMOC (I/O) | | |
| | GPIO101 | | | EM2A3 (O) | EQEP2B (I) | SPISOMIC (I/O) | | |
| | GPIO102 | | | EM2A4 (O) | EQEP2S (I/O) | SPICLKC (I/O) | | |
| | GPIO103 | | | EM2A5 (O) | EQEP2I (I/O) | $\overline{\text{SPISTEC}}$ (I/O) | | |
| | GPIO104 | SDAA (I/OD) | | EM2A6 (O) | EQEP3A (I) | SCITXDD (O) | | |
| | GPIO105 | SCLA (I/OD) | | EM2A7 (O) | EQEP3B (I) | SCIRXDD (I) | | |
| | GPIO106 | | | EM2A8 (O) | EQEP3S (I/O) | SCITXDC (O) | | |
| | GPIO107 | | | EM2A9 (O) | EQEP3I (I/O) | SCIRXDC (I) | | |
| | GPIO108 | | | EM2A10 (O) | | | | |
| | GPIO109 | | | EM2A11 (O) | | | | |
| | GPIO110 | | | EM2WAIT (I) | | | | |
| | GPIO111 | | | EM2BA0 (O) | | | | |
| | GPIO112 | | | EM2BA1 (O) | | | | |
| | GPIO113 | | | EM2CAS (O) | | | | |
| | GPIO114 | | | EM2RAS (O) | | | | |
| | GPIO115 | | | $\overline{\text{EM2CS0}}$ (O) | | | | |
| | GPIO116 | | | $\overline{\text{EM2CS2}}$ (O) | | | | |
| | GPIO117 | | | EM2SDCKE (O) | | | | |
| | GPIO118 | | | EM2CLK (O) | | | | |
| | GPIO119 | | | EM2RNW (O) | | | | |
| | GPIO120 | | | $\overline{\text{EM2WE}}$ (O) | | | | USB0PFLT |
| | GPIO121 | | | $\overline{\text{EM2OE}}$ (O) | | | | USB0EPEN |
| | GPIO122 | | | | | SPISIMOC (I/O) | SD1_D1 (I) | |
| | GPIO123 | | | | | SPISOMIC (I/O) | SD1_C1 (I) | |
| | GPIO124 | | | | | SPICLKC (I/O) | SD1_D2 (I) | |
| | GPIO125 | | | | | $\overline{\text{SPISTEC}}$ (I/O) | SD1_C2 (I) | |
| | GPIO126 | | | | | | SD1_D3 (I) | |
| | GPIO127 | | | | | | SD1_C3 (I) | |
| | GPIO128 | | | | | | SD1_D4 (I) | |
| | GPIO129 | | | | | | SD1_C4 (I) | |
| | GPIO130 | | | | | | SD2_D1 (I) | |
| | GPIO131 | | | | | | SD2_C1 (I) | |
| | GPIO132 | | | | | | SD2_D2 (I) | |
| | GPIO133/ AUXCLKIN | | | | | | SD2_C2 (I) | |
| | GPIO134 | | | | | | SD2_D3 (I) | |
| | GPIO135 | | | | | SCITXDA (O) | SD2_C3 (I) | |
| | GPIO136 | | | | | SCIRXDA (I) | SD2_D4 (I) | |
| | GPIO137 | | | | | SCITXDB (O) | SD2_C4 (I) | |
| | GPIO138 | | | | | SCIRXDB (I) | | |
| | GPIO139 | | | | | SCIRXDC (I) | | |
| | GPIO140 | | | | | SCITXDC (O) | | |


Copyright © 2013–2020, Texas Instruments Incorporated

## Table 4-3. GPIO Muxed Pins[(1)(2)] (continued)

| | GPIO Mux Selection | | | | | | | |
|---|---|---|---|---|---|---|---|---|
| **GPIO Index** | **0, 4, 8, 12** | **1** | **2** | **3** | **5** | **6** | **7** | **15** |
| **GPyGMUXn. GPIOz =** | **00b, 01b, 10b, 11b** | **00b** | | | **01b** | | | **11b** |
| **GPyMUXn. GPIOz =** | **00b** | **01b** | **10b** | **11b** | **01b** | **10b** | **11b** | **11b** |
| | GPIO141 | | | | | SCIRXDD (I) | | |
| | GPIO142 | | | | | SCITXDD (O) | | |
| | GPIO143 | | | | | | | |
| | GPIO144 | | | | | | | |
| | GPIO145 | EPWM1A (O) | | | | | | |
| | GPIO146 | EPWM1B (O) | | | | | | |
| | GPIO147 | EPWM2A (O) | | | | | | |
| | GPIO148 | EPWM2B (O) | | | | | | |
| | GPIO149 | EPWM3A (O) | | | | | | |
| | GPIO150 | EPWM3B (O) | | | | | | |
| | GPIO151 | EPWM4A (O) | | | | | | |
| | GPIO152 | EPWM4B (O) | | | | | | |
| | GPIO153 | EPWM5A (O) | | | | | | |
| | GPIO154 | EPWM5B (O) | | | | | | |
| | GPIO155 | EPWM6A (O) | | | | | | |
| | GPIO156 | EPWM6B (O) | | | | | | |
| | GPIO157 | EPWM7A (O) | | | | | | |
| | GPIO158 | EPWM7B (O) | | | | | | |
| | GPIO159 | EPWM8A (O) | | | | | | |
| | GPIO160 | EPWM8B (O) | | | | | | |
| | GPIO161 | EPWM9A (O) | | | | | | |
| | GPIO162 | EPWM9B (O) | | | | | | |
| | GPIO163 | EPWM10A (O) | | | | | | |
| | GPIO164 | EPWM10B (O) | | | | | | |
| | GPIO165 | EPWM11A (O) | | | | | | |
| | GPIO166 | EPWM11B (O) | | | | | | |
| | GPIO167 | EPWM12A (O) | | | | | | |
| | GPIO168 | EPWM12B (O) | | | | | | |

### 4.4.2 Input X-BAR

The Input X-BAR is used to route any GPIO input to the ADC, eCAP, and ePWM peripherals as well as to external interrupts (XINT) (see Figure 4-7). Table 4-4 shows the input X-BAR destinations. For details on configuring the Input X-BAR, see the Crossbar (X-BAR) chapter of the *TMS320F2837xD Dual-Core Microcontrollers Technical Reference Manual*.

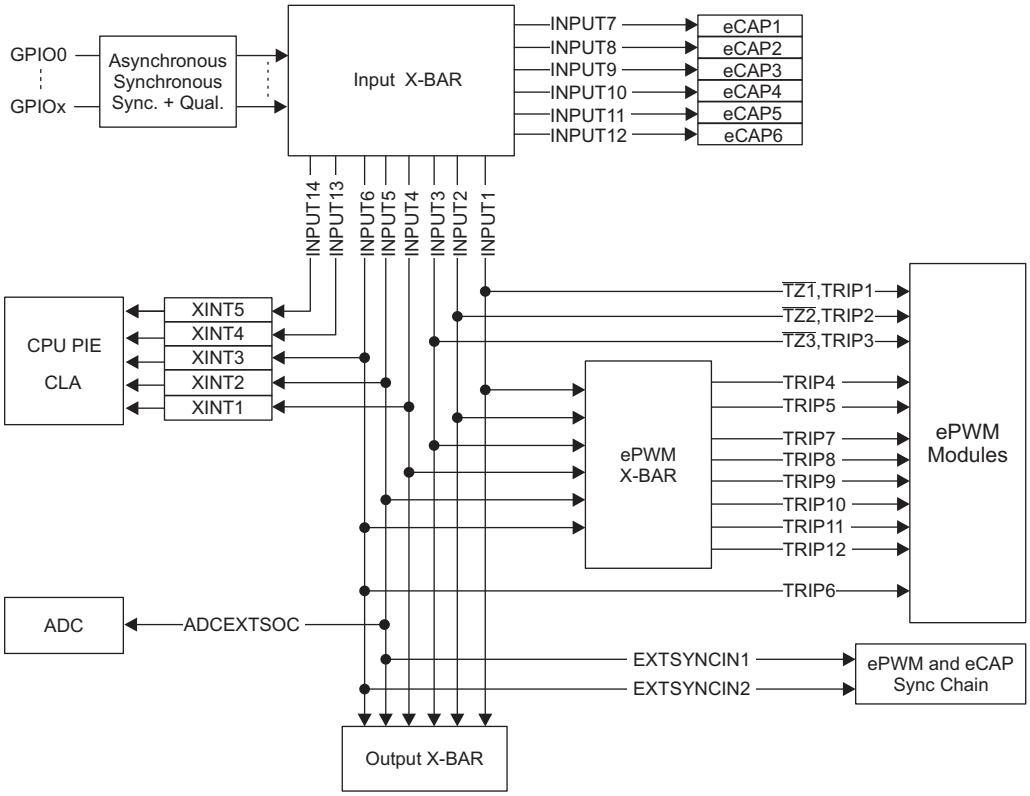


**Figure 4-7. Input X-BAR**

**Table 4-4. Input X-BAR Destinations**

| INPUT | DESTINATIONS |
|---|---|
| INPUT1 | EPWM[TZ1,TRIP1], EPWM X-BAR, Output X-BAR |
| INPUT2 | EPWM[TZ2,TRIP2], EPWM X-BAR, Output X-BAR |
| INPUT3 | EPWM[TZ3,TRIP3], EPWM X-BAR, Output X-BAR |
| INPUT4 | XINT1, EPWM X-BAR, Output X-BAR |
| INPUT5 | XINT2, ADCEXTSOC, EXTSYNCIN1, EPWM X-BAR, Output X-BAR |
| INPUT6 | XINT3, EPWM[TRIP6], EXTSYNCIN2, EPWM X-BAR, Output X-BAR |
| INPUT7 | ECAP1 |
| INPUT8 | ECAP2 |
| INPUT9 | ECAP3 |
| INPUT10 | ECAP4 |
| INPUT11 | ECAP5 |
| INPUT12 | ECAP6 |
| INPUT13 | XINT4 |
| INPUT14 | XINT5 |


Copyright © 2013–2020, Texas Instruments Incorporated

### 4.4.3 Output X-BAR and ePWM X-BAR

The Output X-BAR has eight outputs which can be selected on the GPIO mux as OUTPUTXBARx. The ePWM X-BAR has eight outputs which are connected to the TRIPx inputs of the ePWM. The sources for both the Output X-BAR and ePWM X-BAR are shown in Figure 4-8. For details on the Output X-BAR and ePWM X-BAR, see the Crossbar (X-BAR) chapter of the *TMS320F2837xD Dual-Core Microcontrollers Technical Reference Manual*.

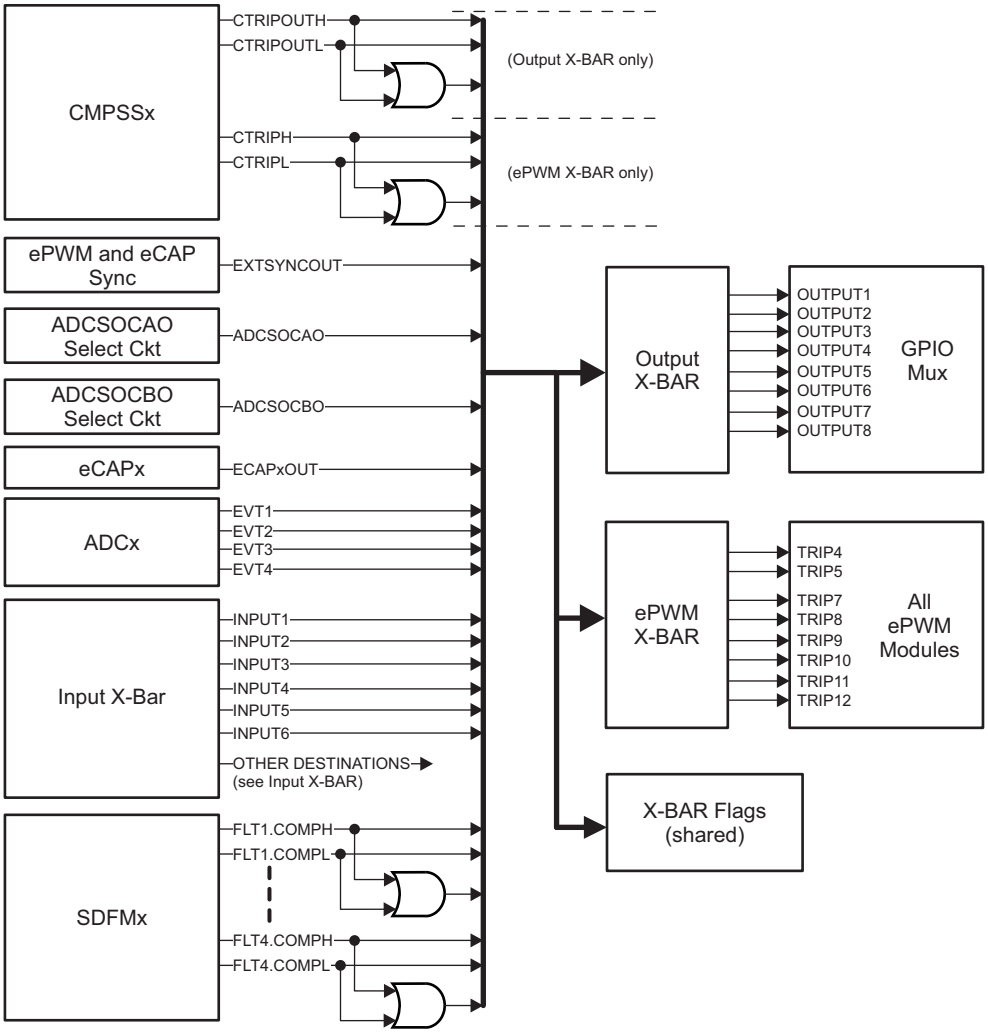


**Figure 4-8. Output X-BAR and ePWM X-BAR**

### 4.4.4 USB Pin Muxing

Table 4-5 shows assignment of the alternate USB function mapping. These can be configured with the GPBAMSEL register.

**Table 4-5. Alternate USB Function**

| GPIO | GPBAMSEL SETTING | USB FUNCTION |
|---|---|---|
| GPIO42 | GPBAMSEL[10] = 1b | USB0DM |
| GPIO43 | GPBAMSEL[11] = 1b | USB0DP |

### 4.4.5 High-Speed SPI Pin Muxing

The SPI module on this device has a high-speed mode. To achieve the highest possible speed, a special GPIO configuration is used on a single GPIO mux option for each SPI. These GPIOs may also be used by the SPI when not in high-speed mode (HS_MODE = 0).

To select the mux options that enable the SPI high-speed mode, configure the GPyGMUX and GPyMUX registers as shown in Table 4-6.

**Table 4-6. GPIO Configuration for High-Speed SPI**

| GPIO | SPI SIGNAL | MUX CONFIGURATION | |
|---|---|---|---|
| **SPIA** | | | |
| GPIO58 | SPISIMOA | GPBGMUX2[21:20]=11b | GPBMUX2[21:20]=11b |
| GPIO59 | SPISOMIA | GPBGMUX2[23:22]=11b | GPBMUX2[23:22]=11b |
| GPIO60 | SPICLKA | GPBGMUX2[25:24]=11b | GPBMUX2[25:24]=11b |
| GPIO61 | $\overline{\text{SPISTEA}}$ | GPBGMUX2[27:26]=11b | GPBMUX2[27:26]=11b |
| **SPIB** | | | |
| GPIO63 | SPISIMOB | GPBGMUX2[31:30]=11b | GPBMUX2[31:30]=11b |
| GPIO64 | SPISOMIB | GPCGMUX1[1:0]=11b | GPCMUX1[1:0]=11b |
| GPIO65 | SPICLKB | GPCGMUX1[3:2]=11b | GPCMUX1[3:2]=11b |
| GPIO66 | $\overline{\text{SPISTEB}}$ | GPCGMUX1[5:4]=11b | GPCMUX1[5:4]=11b |
| **SPIC** | | | |
| GPIO69 | SPISIMOC | GPCGMUX1[11:10]=11b | GPCMUX1[11:10]=11b |
| GPIO70 | SPISOMIC | GPCGMUX1[13:12]=11b | GPCMUX1[13:12]=11b |
| GPIO71 | SPICLKC | GPCGMUX1[15:14]=11b | GPCMUX1[15:14]=11b |
| GPIO72 | $\overline{\text{SPISTEC}}$ | GPCGMUX1[17:16]=11b | GPCMUX1[17:16]=11b |


Copyright © 2013–2020, Texas Instruments Incorporated

## 4.5 Connections for Unused Pins

For applications that do not need to use all functions of the device, Table 4-7 lists acceptable conditioning for any unused pins. When multiple options are listed in Table 4-7, any are acceptable. Pins not listed in Table 4-7 must be connected according to Table 4-1.

**Table 4-7. Connections for Unused Pins**

| SIGNAL NAME | ACCEPTABLE PRACTICE |
|---|---|
| **Analog** | |
| $V_{REFHIx}$ | Tie to $V_{DDA}$ |
| $V_{REFLOx}$ | Tie to $V_{SSA}$ |
| ADCINx | • No Connect<br>• Tie to $V_{SSA}$ |
| **Digital** | |
| GPIOx | • No connection (input mode with internal pullup enabled)<br>• No connection (output mode with internal pullup disabled)<br>• Pullup or pulldown resistor (any value resistor, input mode, and with internal pullup disabled) |
| X1 | Tie to $V_{SS}$ |
| X2 | No Connect |
| TCK | • No Connect<br>• Pullup resistor |
| TDI | • No Connect<br>• Pullup resistor |
| TDO | No Connect |
| TMS | No Connect |
| $\overline{TRST}$ | Pulldown resistor (2.2 kΩ or smaller) |
| VREGENZ | Tie to $V_{DDIO}$. VREG is not supported. |
| ERRORSTS | No Connect |
| FLT1 | No Connect |
| FLT2 | No Connect |
| **Power and Ground** | |
| $V_{DD}$ | All $V_{DD}$ pins must be connected per Table 4-1. |
| $V_{DDA}$ | If a dedicated analog supply is not used, tie to $V_{DDIO}$. |
| $V_{DDIO}$ | All $V_{DDIO}$ pins must be connected per Table 4-1. |
| $V_{DD3VFL}$ | Must be tied to $V_{DDIO}$ |
| $V_{DDOSC}$ | Must be tied to $V_{DDIO}$ |
| $V_{SS}$ | All $V_{SS}$ pins must be connected to board ground. |
| $V_{SSA}$ | If a dedicated analog ground is not used, tie to $V_{SS}$. |
| $V_{SSOSC}$ | If an external crystal is not used, this pin may be connected to the board ground. |

# 5 Specifications

## 5.1 Absolute Maximum Ratings[(1)(2)]

over operating free-air temperature range (unless otherwise noted)

| | | MIN | MAX | UNIT |
|---|---|---|---|---|
| Supply voltage | $V_{DDIO}$ with respect to $V_{SS}$ | –0.3 | 4.6 | V |
| | $V_{DD3VFL}$ with respect to $V_{SS}$ | –0.3 | 4.6 | |
| | $V_{DDOSC}$ with respect to $V_{SS}$ | –0.3 | 4.6 | |
| | $V_{DD}$ with respect to $V_{SS}$ | –0.3 | 1.5 | |
| Analog voltage | $V_{DDA}$ with respect to $V_{SSA}$ | –0.3 | 4.6 | V |
| Input voltage | $V_{IN}$ (3.3 V) | –0.3 | 4.6 | V |
| Output voltage | $V_O$ | –0.3 | 4.6 | V |
| Input clamp current | Digital/analog input (per pin), $I_{IK}$ ($V_{IN} < V_{SS}$ or $V_{IN} > V_{DDIO}$)[(3)] | –20 | 20 | mA |
| | Analog input (per pin), $I_{IKANALOG}$ ($V_{IN} < V_{SSA}$ or $V_{IN} > V_{DDA}$) | –20 | 20 | |
| | Total for all inputs, $I_{IKTOTAL}$ ($V_{IN} < V_{SS}/V_{SSA}$ or $V_{IN} > V_{DDIO}/V_{DDA}$) | –20 | 20 | |
| Output current | Digital output (per pin), $I_{OUT}$ | –20 | 20 | mA |
| Free-Air temperature | $T_A$ | –40 | 125 | °C |
| Operating junction temperature | $T_J$ | –40 | 150 | °C |
| Storage temperature[(4)] | $T_{stg}$ | –65 | 150 | °C |

(1) Stresses beyond those listed under absolute maximum ratings may cause permanent damage to the device. These are stress ratings only, and functional operation of the device at these or any other conditions beyond those indicated under Section 5.4 is not implied. Exposure to absolute-maximum-rated conditions for extended periods may affect device reliability.
(2) All voltage values are with respect to $V_{SS}$, unless otherwise noted.
(3) Continuous clamp current per pin is ±2 mA. Do not operate in this condition continuously as $V_{DDIO}/V_{DDA}$ voltage may internally rise and impact other electrical specifications.
(4) Long-term high-temperature storage or extended use at maximum temperature conditions may result in a reduction of overall device life. For additional information, see *Semiconductor and IC Package Thermal Metrics*.


Copyright © 2013–2020, Texas Instruments Incorporated

## 5.2 ESD Ratings – Commercial

| | | | VALUE | UNIT |
|---|---|---|---|---|
| **TMS320F28379D, TMS320F28376D, TMS320F28375D, and TMS320F23874D in 337-ball ZWT package** | | | | |
| $V_{(ESD)}$ | Electrostatic discharge (ESD) | Human-body model (HBM), per ANSI/ESDA/JEDEC JS-001 (1) | ±2000 | V |
| | | Charged-device model (CDM), per JEDEC specification JESD22-C101 or ANSI/ESDA/JEDEC JS-002 (2) | ±500 | |
| **TMS320F28379D, TMS320F28378D, TMS320F28376D, TMS320F28375D, and TMS320F23874D in 176-pin PTP package** | | | | |
| $V_{(ESD)}$ | Electrostatic discharge (ESD) | Human-body model (HBM), per ANSI/ESDA/JEDEC JS-001 (1) | ±2000 | V |
| | | Charged-device model (CDM), per JEDEC specification JESD22-C101 or ANSI/ESDA/JEDEC JS-002 (2) | ±500 | |
| **TMS320F23875D in 100-pin PZP package** | | | | |
| $V_{(ESD)}$ | Electrostatic discharge (ESD) | Human-body model (HBM), per ANSI/ESDA/JEDEC JS-001 (1) | ±2000 | V |
| | | Charged-device model (CDM), per JEDEC specification JESD22-C101 or ANSI/ESDA/JEDEC JS-002 (2) | ±500 | |

(1) JEDEC document JEP155 states that 500-V HBM allows safe manufacturing with a standard ESD control process.
(2) JEDEC document JEP157 states that 250-V CDM allows safe manufacturing with a standard ESD control process.

## 5.3 ESD Ratings – Automotive

| | | | | VALUE | UNIT |
|---|---|---|---|---|---|
| **TMS320F28377D in 337-ball ZWT package** | | | | | |
| $V_{(ESD)}$ | Electrostatic discharge | Human body model (HBM), per AEC Q100-002 (1) | All pins | ±2000 | V |
| | | Charged device model (CDM), per AEC Q100-011 | All pins | ±500 | |
| | | | Corner balls on 337-ball ZWT: A1, A19, W1, W19 | ±750 | |
| **TMS320F28377D in 176-pin PTP package** | | | | | |
| $V_{(ESD)}$ | Electrostatic discharge | Human body model (HBM), per AEC Q100-002 (1) | All pins | ±2000 | V |
| | | Charged device model (CDM), per AEC Q100-011 | All pins | ±500 | |
| | | | Corner pins on 176-pin PTP: 1, 44, 45, 88, 89, 132, 133, 176 | ±750 | |

(1) AEC Q100-002 indicates HBM stressing is done in accordance with the ANSI/ESDA/JEDEC JS-001 specification.

## 5.4 Recommended Operating Conditions

| | | MIN | NOM | MAX | UNIT |
|---|---|---|---|---|---|
| Device supply voltage, I/O, $V_{DDIO}$ (1) | | 3.14 | 3.3 | 3.47 | V |
| Device supply voltage, $V_{DD}$ | | 1.14 | 1.2 | 1.26 | V |
| Supply ground, $V_{SS}$ | | | 0 | | V |
| Analog supply voltage, $V_{DDA}$ | | 3.14 | 3.3 | 3.47 | V |
| Analog ground, $V_{SSA}$ | | | 0 | | V |
| Junction temperature, $T_J$ | T version | –40 | | 105 | °C |
| | S version (2) | –40 | | 125 | |
| | Q version (AEC Q100 qualification) (2) | –40 | | 150 | |
| Free-Air temperature, $T_A$ | Q version (AEC Q100 qualification) | –40 | | 125 | °C |

(1) $V_{DDIO}$, $V_{DD3VFL}$, and $V_{DDOSC}$ should be maintained within 0.3 V of each other.
(2) Operation above $T_J$ = 105°C for extended duration will reduce the lifetime of the device. See *Calculating Useful Lifetimes of Embedded Processors* for more information.


Copyright © 2013–2020, Texas Instruments Incorporated

## 5.5 Power Consumption Summary

Current values listed in this section are representative for the test conditions given and not the absolute maximum possible. The actual device currents in an application will vary with application code and pin configurations. Table 5-1 shows the device current consumption at 200-MHz SYSCLK.

**Table 5-1. Device Current Consumption at 200-MHz SYSCLK**

| MODE | TEST CONDITIONS | $I_{DD}$ | | $I_{DDIO}$ (1) | | $I_{DDA}$ | | $I_{DD3VFL}$ | |
|---|---|---|---|---|---|---|---|---|---|
| | | TYP (2) | MAX (3) | TYP (2) | MAX (3) | TYP (2) | MAX (3) | TYP (2) | MAX (3) |
| Operational | • Code is running out of RAM. (4)<br>• All I/O pins are left unconnected.<br>• Peripherals not active have their clocks disabled.<br>• FLASH is read and in active state.<br>• XCLKOUT is enabled at SYSCLK/4. | 325 mA | 495 mA | 30 mA | | 13 mA | 20 mA | 33 mA | 40 mA |
| IDLE | • Both CPU1 and CPU2 are in IDLE mode.<br>• Flash is powered down.<br>• XCLKOUT is turned off. | 105 mA | 250 mA | 3 mA | 10 mA | 10 µA | 150 µA | 10 µA | 150 µA |
| STANDBY | • Both CPU1 and CPU2 are in STANDBY mode.<br>• Flash is powered down.<br>• XCLKOUT is turned off. | 30 mA | 170 mA | 3 mA | 10 mA | 5 µA | 150 µA | 10 µA | 150 µA |
| HALT (5) | • CPU1 watchdog is running.<br>• Flash is powered down.<br>• XCLKOUT is turned off. | 1.5 mA | 120 mA | 750 µA | 2 mA | 5 µA | 150 µA | 10 µA | 150 µA |
| HIBERNATE (6) | • CPU1.M0 and CPU1.M1 RAMs are in low-power data retention mode.<br>• CPU2.M0 and CPU2.M1 RAMs are in low-power data retention mode. | 300 µA | 5 mA | 750 µA | 2 mA | 5 µA | 75 µA | 1 µA | 50 µA |
| Flash Erase/Program (7) | • CPU1 is running from RAM.<br>• CPU2 is running from Flash.<br>• All I/O pins are left unconnected.<br>• Peripheral clocks are disabled.<br>• CPU1 is performing Flash Erase and Programming.<br>• CPU2 is accessing Flash locations to keep bank active.<br>• XCLKOUT is turned off. | 242 mA | 360 mA | 3 mA | 10 mA | 10 µA | 150 µA | 53 mA | 65 mA |

(1) $I_{DDIO}$ current is dependent on the electrical loading on the I/O pins.
(2) TYP: $V_{nom}$, 30°C
(3) MAX: $V_{max}$, 125°C
(4) The following is executed in a loop on CPU1:
- All of the communication peripherals are exercised in loop-back mode: CAN-A to CAN-B; SPI-A to SPI-C; SCI-A to SCI-D; I2C-A to I2C-B; McBSP-A to McBSP-B; USB
- SDFM1 to SDFM4 active
- ePWM1 to ePWM12 generate 400-kHz PWM output on 24 pins
- CPU TIMERs active
- DMA does 32-bit burst transfers
- CLA1 does multiply-accumulate tasks
- All ADCs perform continuous conversion
- All DACs ramp voltage up/down at 150 kHz
- CMPSS1 to CMPSS8 active

The following is executed in a loop on CPU2:
- CPU TIMERs active
- CLA1 does multiply-accumulate tasks
- VCU does complex multiply/accumulate with parallel load
- TMU calculates a cosine
- FPU does multiply/accumulate with parallel load

(5) CPU2 must go into IDLE mode before CPU1 enters HALT mode.
(6) CPU2 must go into reset/IDLE/STANDBY mode before CPU1 enters HIBERNATE mode.
(7) Brownout events during flash programming can corrupt flash data. Programming environments using alternate power sources (such as a USB programmer) must be capable of supplying the rated current for the device and other system components with sufficient margin to avoid supply brownout conditions.

### 5.5.1 Current Consumption Graphs

Figure 5-1 and Figure 5-2 are a typical representation of the relationship between frequency and current consumption/power on the device. The operational test from Table 5-1 was run across frequency at $V_{max}$ and high temperature. Actual results will vary based on the system implementation and conditions.

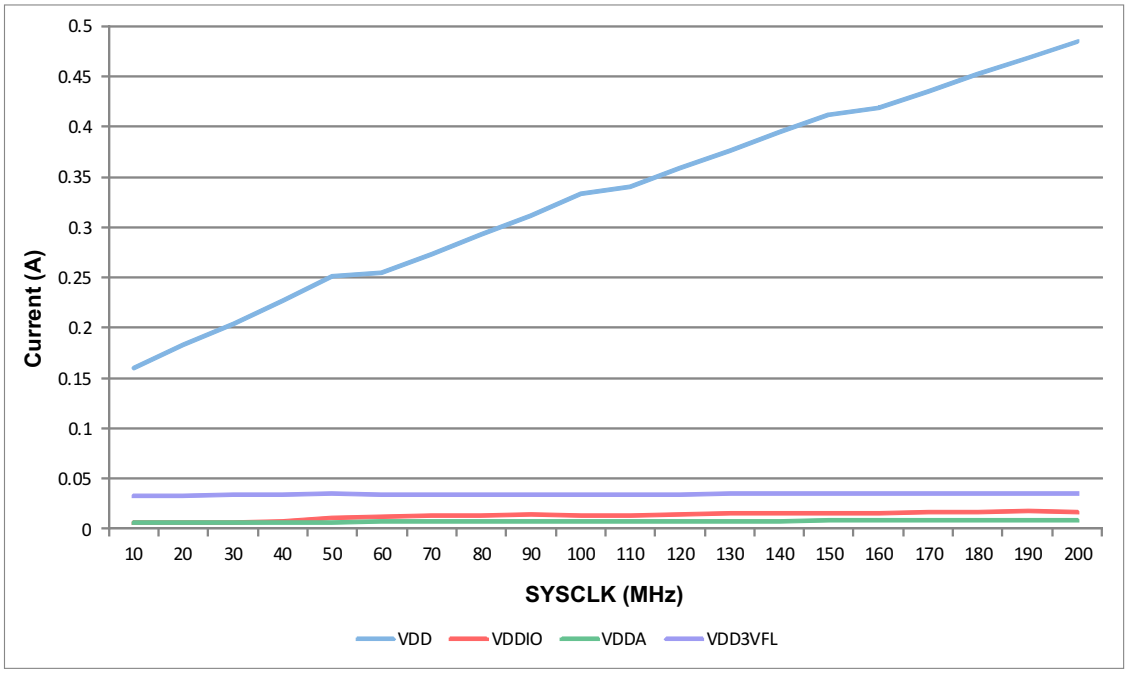


**Figure 5-1. Operational Current Versus Frequency**

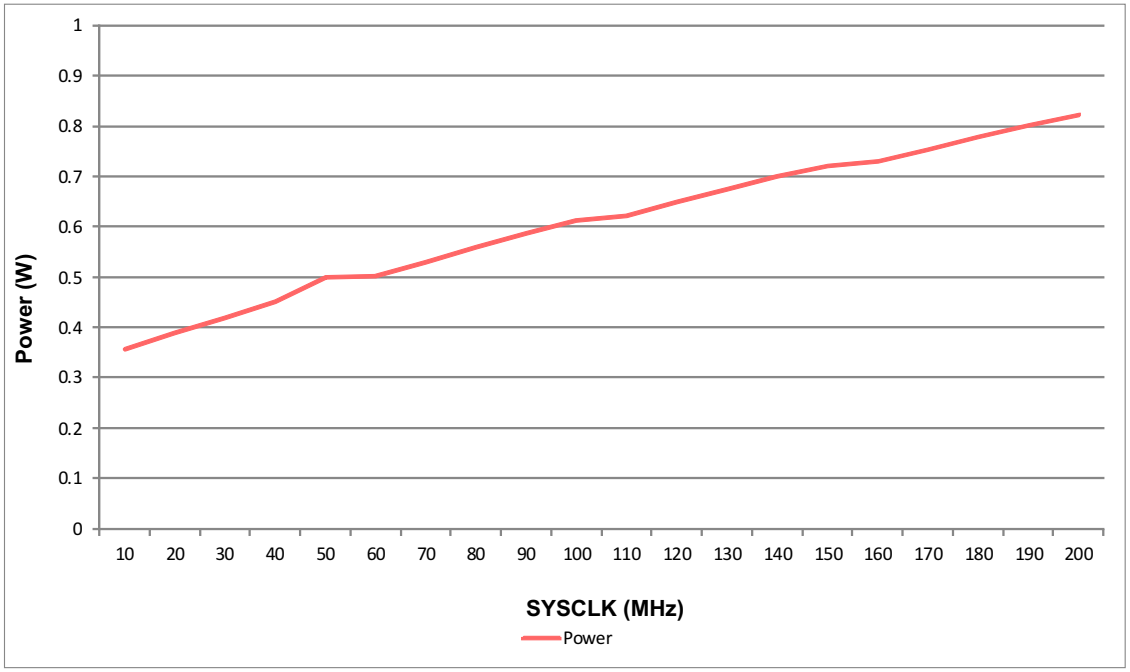


**Figure 5-2. Power Versus Frequency**


Copyright © 2013–2020, Texas Instruments Incorporated

Leakage current will increase with operating temperature in a nonlinear manner. The difference in $V_{DD}$ current between TYP and MAX conditions can be seen in Figure 5-3. The current consumption in HALT mode is primarily leakage current as there is no active switching if the internal oscillator has been powered down.

Figure 5-3 shows the typical leakage current across temperature. The device was placed into HALT mode under nominal voltage conditions.

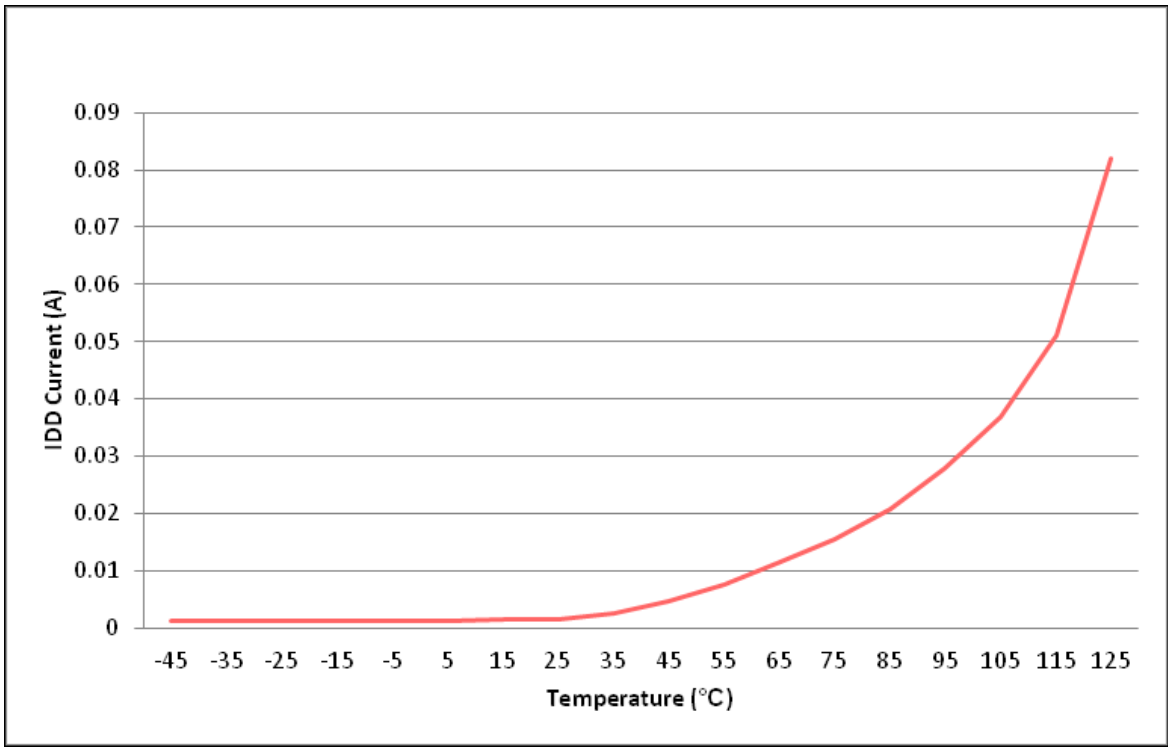


**Figure 5-3. $I_{DD}$ Leakage Current Versus Temperature**

### 5.5.2 Reducing Current Consumption

The F2837xD devices provide some methods to reduce the device current consumption:

- Any one of the four low-power modes—IDLE, STANDBY, HALT, and HIBERNATE—could be entered during idle periods in the application.
- The flash module may be powered down if the code is run from RAM.
- Disable the pullups on pins that assume an output function.
- Each peripheral has an individual clock-enable bit (PCLKCRx). Reduced current consumption may be achieved by turning off the clock to any peripheral that is not used in a given application. Table 5-2 indicates the typical current reduction that may be achieved by disabling the clocks using the PCLKCRx register.
- To realize the lowest $V_{DDA}$ current consumption in a low-power mode, see the respective analog chapter of the *TMS320F2837xD Dual-Core Microcontrollers Technical Reference Manual* to ensure each module is powered down as well.

**Table 5-2. Current on $V_{DD}$ Supply by Various Peripherals (at 200 MHz)(1)**

| PERIPHERAL MODULE(2) | $I_{DD}$ CURRENT REDUCTION (mA) |
|---|---|
| ADC(3) | 3.3 |
| CAN | 3.3 |
| CLA | 1.4 |
| CMPSS(3) | 1.4 |
| CPUTIMER | 0.3 |
| DAC(3) | 0.6 |
| DMA | 2.9 |
| eCAP | 0.6 |
| EMIF1 | 2.9 |
| EMIF2 | 2.6 |
| ePWM1 to ePWM4(4) | 4.5 |
| ePWM5 to ePWM12(4) | 1.7 |
| HRPWM(4) | 1.7 |
| I2C | 1.3 |
| McBSP | 1.6 |
| SCI | 0.9 |
| SDFM | 2 |
| SPI | 0.5 |
| uPP | 7.3 |
| USB and AUXPLL at 60 MHz | 23.8 |

(1) At $V_{max}$ and 125°C.
(2) All peripherals are disabled upon reset. Use the PCLKCRx register to individually enable peripherals. For peripherals with multiple instances, the current quoted is for a single module.
(3) This number represents the current drawn by the digital portion of the ADC, CMPSS, and DAC modules.
(4) The ePWM is at /2 of SYSCLK.


Copyright © 2013–2020, Texas Instruments Incorporated

## 5.6 Electrical Characteristics

over recommended operating conditions (unless otherwise noted)

| PARAMETER | | | TEST CONDITIONS | MIN | TYP | MAX | UNIT |
|---|---|---|---|---|---|---|---|
| $V_{OH}$ | High-level output voltage | | $I_{OH}$ = $I_{OH}$ MIN | $V_{DDIO}$ * 0.8 | | | V |
| | | | $I_{OH}$ = –100 µA | $V_{DDIO}$ – 0.2 | | | |
| $V_{OL}$ | Low-level output voltage | | $I_{OL}$ = $I_{OL}$ MAX | | | 0.4 | V |
| | | | $I_{OL}$ = 100 µA | | | 0.2 | |
| $I_{OH}$ | High-level output source current for all output pins | | | –4 | | | mA |
| $I_{OL}$ | Low-level output sink current for all output pins | | | | | 4 | mA |
| $V_{IH}$ | High-level input voltage (3.3 V) | GPIO0–GPIO7, GPIO42–GPIO43, GPIO46–GPIO47 | | $V_{DDIO}$ * 0.7 | | $V_{DDIO}$ + 0.3 | V |
| | | All other pins | | 2.0 | | $V_{DDIO}$ + 0.3 | |
| $V_{IL}$ | Low-level input voltage (3.3 V) | | | $V_{SS}$ – 0.3 | | 0.8 | V |
| $V_{HYSTERESIS}$ | Input hysteresis | | | | 150 | | mV |
| $I_{pulldown}$ | Input current | Digital inputs with pulldown(1) | $V_{DDIO}$ = 3.3 V<br>$V_{IN}$ = $V_{DDIO}$ | | 120 | | µA |
| $I_{pullup}$ | Input current | Digital inputs with pullup enabled(1) | $V_{DDIO}$ = 3.3 V<br>$V_{IN}$ = 0 V | | 150 | | µA |
| $I_{LEAK}$ | Pin leakage | Digital | Pullups disabled<br>0 V ≤ $V_{IN}$ ≤ $V_{DDIO}$ | | | 2 | µA |
| | | Analog (except ADCINB0 or DACOUTx) | 0 V ≤ $V_{IN}$ ≤ $V_{DDA}$ | | | 2 | |
| | | ADCINB0 | | | 2 | 11(2) | |
| | | DACOUTx | | | 66 | | |
| $C_I$ | Input capacitance | | | | 2 | | pF |
| $V_{DDIO-POR}$ | $V_{DDIO}$ power-on reset voltage | | | | 2.3 | | V |

(1) See Table 4-2 for a list of pins with a pullup or pulldown.
(2) The MAX input leakage shown on ADCINB0 is at high temperature.

## 5.7 Thermal Resistance Characteristics

### 5.7.1 ZWT Package

| | | °C/W(1) | AIR FLOW (lfm)(2) |
|---|---|---|---|
| $R\Theta_{JC}$ | Junction-to-case thermal resistance | 8.3 | N/A |
| $R\Theta_{JB}$ | Junction-to-board thermal resistance | 11.6 | N/A |
| $R\Theta_{JA}$ (High k PCB) | Junction-to-free air thermal resistance | 21.5 | 0 |
| $R\Theta_{JMA}$ | Junction-to-moving air thermal resistance | 19.0 | 150 |
| | | 17.8 | 250 |
| | | 16.5 | 500 |
| $Psi_{JT}$ | Junction-to-package top | 0.2 | 0 |
| | | 0.3 | 150 |
| | | 0.4 | 250 |
| | | 0.5 | 500 |
| $Psi_{JB}$ | Junction-to-board | 11.4 | 0 |
| | | 11.3 | 150 |
| | | 11.2 | 250 |
| | | 11.0 | 500 |

(1) These values are based on a JEDEC-defined 2S2P system (with the exception of the Theta JC [$R\Theta_{JC}$] value, which is based on a JEDEC-defined 1S0P system) and will change based on environment as well as application. For more information, see these EIA/JEDEC standards:
- JESD51-2, *Integrated Circuits Thermal Test Method Environmental Conditions - Natural Convection (Still Air)*
- JESD51-3, *Low Effective Thermal Conductivity Test Board for Leaded Surface Mount Packages*
- JESD51-7, *High Effective Thermal Conductivity Test Board for Leaded Surface Mount Packages*
- JESD51-9, *Test Boards for Area Array Surface Mount Package Thermal Measurements*

(2) lfm = linear feet per minute

### 5.7.2 PTP Package

| | | °C/W(1) | AIR FLOW (lfm)(2) |
|---|---|---|---|
| $R\Theta_{JC}$ | Junction-to-case thermal resistance | 6.97 | N/A |
| $R\Theta_{JB}$ | Junction-to-board thermal resistance | 6.05 | N/A |
| $R\Theta_{JA}$ (High k PCB) | Junction-to-free air thermal resistance | 17.8 | 0 |
| $R\Theta_{JMA}$ | Junction-to-moving air thermal resistance | 12.8 | 150 |
| | | 11.4 | 250 |
| | | 10.1 | 500 |
| $Psi_{JT}$ | Junction-to-package top | 0.11 | 0 |
| | | 0.24 | 150 |
| | | 0.33 | 250 |
| | | 0.42 | 500 |
| $Psi_{JB}$ | Junction-to-board | 6.1 | 0 |
| | | 5.5 | 150 |
| | | 5.4 | 250 |
| | | 5.3 | 500 |

(1) These values are based on a JEDEC-defined 2S2P system (with the exception of the Theta JC [$R\Theta_{JC}$] value, which is based on a JEDEC-defined 1S0P system) and will change based on environment as well as application. For more information, see these EIA/JEDEC standards:
- JESD51-2, *Integrated Circuits Thermal Test Method Environmental Conditions - Natural Convection (Still Air)*
- JESD51-3, *Low Effective Thermal Conductivity Test Board for Leaded Surface Mount Packages*
- JESD51-7, *High Effective Thermal Conductivity Test Board for Leaded Surface Mount Packages*
- JESD51-9, *Test Boards for Area Array Surface Mount Package Thermal Measurements*

(2) lfm = linear feet per minute


Copyright © 2013–2020, Texas Instruments Incorporated

### 5.7.3 PZP Package

| | | °C/W(1) | AIR FLOW (lfm)(2) |
|---|---|---|---|
| $R\Theta_{JC}$ | Junction-to-case thermal resistance | 4.3 | N/A |
| $R\Theta_{JB}$ | Junction-to-board thermal resistance | 5.9 | N/A |
| $R\Theta_{JA}$ (High k PCB) | Junction-to-free air thermal resistance | 19.1 | 0 |
| $R\Theta_{JMA}$ | Junction-to-moving air thermal resistance | 14.3 | 150 |
| | | 12.8 | 250 |
| | | 11.4 | 500 |
| $Psi_{JT}$ | Junction-to-package top | 0.03 | 0 |
| | | 0.09 | 150 |
| | | 0.12 | 250 |
| | | 0.20 | 500 |
| $Psi_{JB}$ | Junction-to-board | 6.0 | 0 |
| | | 5.5 | 150 |
| | | 5.5 | 250 |
| | | 5.3 | 500 |

(1) These values are based on a JEDEC-defined 2S2P system (with the exception of the Theta JC [$R\Theta_{JC}$] value, which is based on a JEDEC-defined 1S0P system) and will change based on environment as well as application. For more information, see these EIA/JEDEC standards:
- JESD51-2, *Integrated Circuits Thermal Test Method Environmental Conditions - Natural Convection (Still Air)*
- JESD51-3, *Low Effective Thermal Conductivity Test Board for Leaded Surface Mount Packages*
- JESD51-7, *High Effective Thermal Conductivity Test Board for Leaded Surface Mount Packages*
- JESD51-9, *Test Boards for Area Array Surface Mount Package Thermal Measurements*

(2) lfm = linear feet per minute

## 5.8 Thermal Design Considerations

Based on the end application design and operational profile, the $I_{DD}$ and $I_{DDIO}$ currents could vary. Systems that exceed the recommended maximum power dissipation in the end product may require additional thermal enhancements. Ambient temperature ($T_A$) varies with the end application and product design. The critical factor that affects reliability and functionality is $T_J$, the junction temperature, not the ambient temperature. Hence, care should be taken to keep $T_J$ within the specified limits. $T_{case}$ should be measured to estimate the operating junction temperature $T_J$. $T_{case}$ is normally measured at the center of the package top-side surface. The thermal application report *Semiconductor and IC Package Thermal Metrics* helps to understand the thermal metrics and definitions.

## 5.9 System

### 5.9.1 Power Sequencing

#### 5.9.1.1 Signal Pin Requirements

Before powering the device, no voltage larger than 0.3 V above $V_{DDIO}$ can be applied to any digital pin, and no voltage larger than 0.3 V above $V_{DDA}$ can be applied to any analog pin (including $V_{REFHI}$).

#### 5.9.1.2 $V_{DDIO}$, $V_{DDA}$, $V_{DD3VFL}$, and $V_{DDOSC}$ Requirements

The 3.3-V supplies should be powered up together and kept within 0.3 V of each other during functional operation.

#### 5.9.1.3 $V_{DD}$ Requirements

The internal VREG is not supported. The VREGENZ pin must be tied to $V_{DDIO}$ and an external source used to supply 1.2 V to $V_{DD}$. During the ramp, $V_{DD}$ should be kept no more than 0.3 V above $V_{DDIO}$.

$V_{DDOSC}$ and $V_{DD}$ must be powered on and off at the same time. $V_{DDOSC}$ should not be powered on when $V_{DD}$ is off. For applications not powering $V_{DDOSC}$ and $V_{DD}$ at the same time, see the "INTOSC: $V_{DDOSC}$ Powered Without $V_{DD}$ Can Cause INTOSC Frequency Drift" advisory in the *TMS320F2837xD Dual-Core MCUs Silicon Errata*.

There is an internal 12.8-mA current source from $V_{DD3VFL}$ to $V_{DD}$ when the flash banks are active. When the flash banks are active and the device is in a low-activity state (for example, a low-power mode), this internal current source can cause $V_{DD}$ to rise to approximately 1.3 V. There will be zero current load to the external system $V_{DD}$ regulator while in this condition. This is not an issue for most regulators; however, if the system voltage regulator requires a minimum load for proper operation, then an external 82Ω resistor can be added to the board to ensure a minimal current load on $V_{DD}$. See the "Low-Power Modes: Power Down Flash or Maintain Minimum Device Activity" advisory in the *TMS320F2837xD Dual-Core MCUs Silicon Errata*.

#### 5.9.1.4 Supply Ramp Rate

The supplies should ramp to full rail within 10 ms. Table 5-3 shows the supply ramp rate.

**Table 5-3. Supply Ramp Rate**

| | | MIN | MAX | UNIT |
|---|---|---|---|---|
| Supply ramp rate | $V_{DDIO}$, $V_{DD}$, $V_{DDA}$, $V_{DD3VFL}$, $V_{DDOSC}$ with respect to $V_{SS}$ | 330 | $10^5$ | V/s |

#### 5.9.1.5 Supply Supervision

An internal power-on-reset (POR) circuit keeps the I/Os in a high-impedance state during power up. External supply voltage supervisors (SVS) can be used to monitor the voltage on the 3.3-V and 1.2-V rails and drive $\overline{XRS}$ low when supplies are outside operational specifications.

**NOTE**

If the supply voltage is held near the POR threshold, then the device may drive periodic resets onto the $\overline{XRS}$ pin.

### 5.9.2 Reset Timing

$\overline{XRS}$ is the device reset pin. It functions as an input and open-drain output. The device has a built-in power-on reset (POR). During power up, the POR circuit drives the $\overline{XRS}$ pin low. A watchdog or NMI watchdog reset also drives the pin low. An external circuit may drive the pin to assert a device reset.


Copyright © 2013–2020, Texas Instruments Incorporated

A resistor with a value from 2.2 kΩ to 10 kΩ should be placed between $\overline{XRS}$ and $V_{DDIO}$. A capacitor should be placed between $\overline{XRS}$ and $V_{SS}$ for noise filtering; the capacitance should be 100 nF or smaller. These values will allow the watchdog to properly drive the $\overline{XRS}$ pin to $V_{OL}$ within 512 OSCCLK cycles when the watchdog reset is asserted. Figure 5-4 shows the recommended reset circuit.

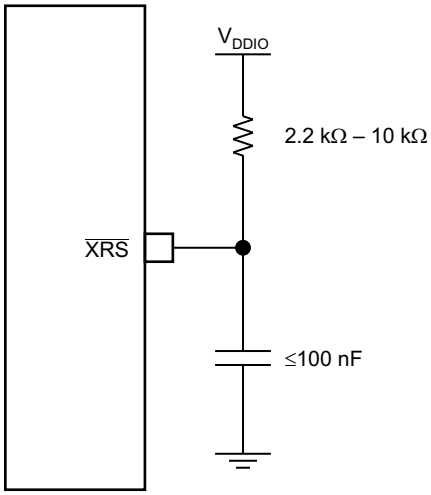


**Figure 5-4. Reset Circuit**

#### 5.9.2.1 Reset Sources

The following reset sources exist on this device: $\overline{XRS}$, $\overline{WDRS}$, $\overline{NMIWDRS}$, $\overline{SYSRS}$, $\overline{SCCRESET}$, and $\overline{HIBRESET}$. See the Reset Signals table in the System Control chapter of the *TMS320F2837xD Dual-Core Microcontrollers Technical Reference Manual*.

The parameter $t_{h(boot\text{-}mode)}$ must account for a reset initiated from any of these sources.

**CAUTION**

Some reset sources are internally driven by the device. Some of these sources will drive $\overline{XRS}$ low. Use this to disable any other devices driving the boot pins. The $\overline{SCCRESET}$ and debugger reset sources do not drive $\overline{XRS}$; therefore, the pins used for boot mode should not be actively driven by other devices in the system. The boot configuration has a provision for changing the boot pins in OTP; for more details, see the *TMS320F2837xD Dual-Core Microcontrollers Technical Reference Manual*.

#### 5.9.2.2 Reset Electrical Data and Timing

Table 5-4 shows the reset ($\overline{XRS}$) timing requirements. Table 5-5 shows the reset ($\overline{XRS}$) switching characteristics. Figure 5-5 shows the power-on reset. Figure 5-6 shows the warm reset.

**Table 5-4. Reset ($\overline{XRS}$) Timing Requirements**

| | | MIN | MAX | UNIT |
|---|---|---|---|---|
| $t_{h(boot\text{-}mode)}$ | Hold time for boot-mode pins | 1.5 | | ms |
| $t_{w(RSL2)}$ | Pulse duration, $\overline{XRS}$ low on warm reset | 3.2 | | µs |

### Table 5-5. Reset ($\overline{XRS}$) Switching Characteristics

over recommended operating conditions (unless otherwise noted)

| PARAMETER | | MIN | TYP | MAX | UNIT |
|---|---|---|---|---|---|
| $t_{w(RSL1)}$ | Pulse duration, $\overline{XRS}$ driven low by device after supplies are stable | | 100 | | µs |
| $t_{w(WDRS)}$ | Pulse duration, reset pulse generated by watchdog | | $512t_{c(OSCCLK)}$ | | cycles |

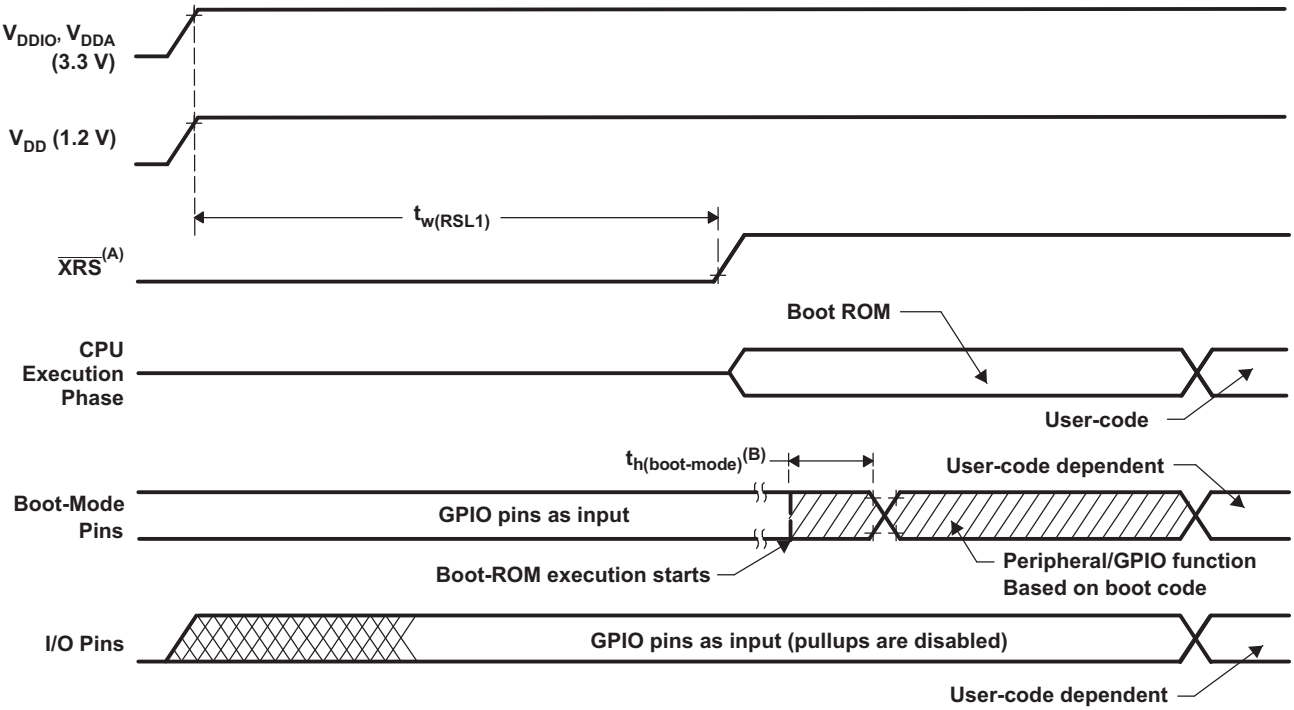


A. The $\overline{XRS}$ pin can be driven externally by a supervisor or an external pullup resistor, see Table 4-1.

B. After reset from any source (see Section 5.9.2.1), the boot ROM code samples Boot Mode pins. Based on the status of the Boot Mode pin, the boot code branches to destination memory or boot code function. If boot ROM code executes after power-on conditions (in debugger environment), the boot code execution time is based on the current SYSCLK speed. The SYSCLK will be based on user environment and could be with or without PLL enabled.

**Figure 5-5. Power-on Reset**

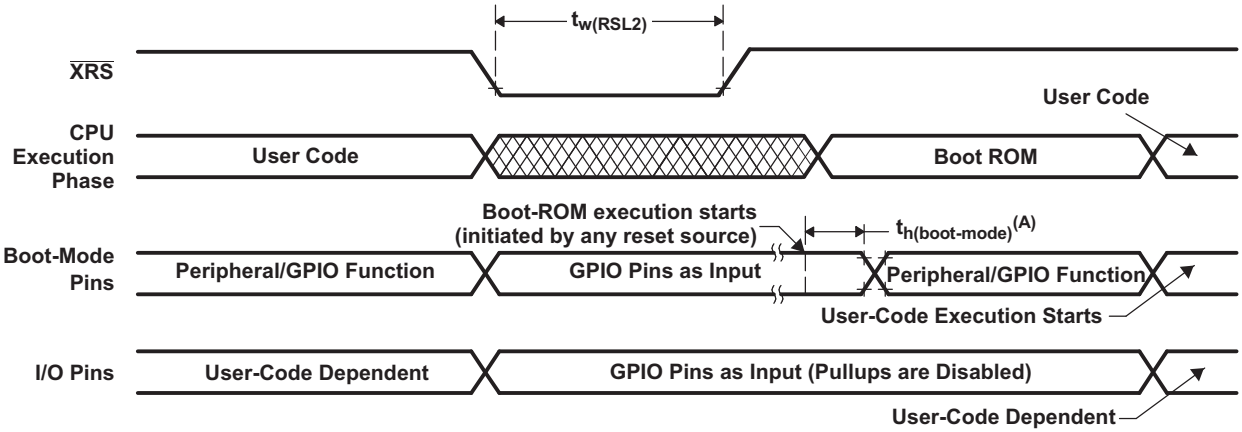


A. After reset from any source (see Section 5.9.2.1), the Boot ROM code samples BOOT Mode pins. Based on the status of the Boot Mode pin, the boot code branches to destination memory or boot code function. If Boot ROM code executes after power-on conditions (in debugger environment), the Boot code execution time is based on the current SYSCLK speed. The SYSCLK will be based on user environment and could be with or without PLL enabled.

**Figure 5-6. Warm Reset**


版权 © 2013–2020, Texas Instruments Incorporated

### 5.9.3 Clock Specifications

#### 5.9.3.1 Clock Sources

表 5-6 lists four possible clock sources. 图 5-7 provides an overview of the device's clocking system.

**表 5-6. Possible Reference Clock Sources**

| CLOCK SOURCE | MODULES CLOCKED | COMMENTS |
|---|---|---|
| INTOSC1 | Can be used to provide clock for:<br>• Watchdog block<br>• Main PLL<br>• CPU-Timer 2 | Internal oscillator 1.<br>Zero-pin overhead 10-MHz internal oscillator. |
| INTOSC2 (1) | Can be used to provide clock for:<br>• Main PLL<br>• Auxiliary PLL<br>• CPU-Timer 2 | Internal oscillator 2.<br>Zero-pin overhead 10-MHz internal oscillator. |
| XTAL | Can be used to provide clock for:<br>• Main PLL<br>• Auxiliary PLL<br>• CPU-Timer 2 | External crystal or resonator connected between the X1 and X2 pins or single-ended clock connected to the X1 pin. |
| AUXCLKIN | Can be used to provide clock for:<br>• Auxiliary PLL<br>• CPU-Timer 2 | Single-ended 3.3-V level clock source. GPIO133/AUXCLKIN pin should be used to provide the input clock. |

(1) On reset, internal oscillator 2 (INTOSC2) is the default clock source for both system PLL (OSCCLK) and auxiliary PLL (AUXOSCCLK).

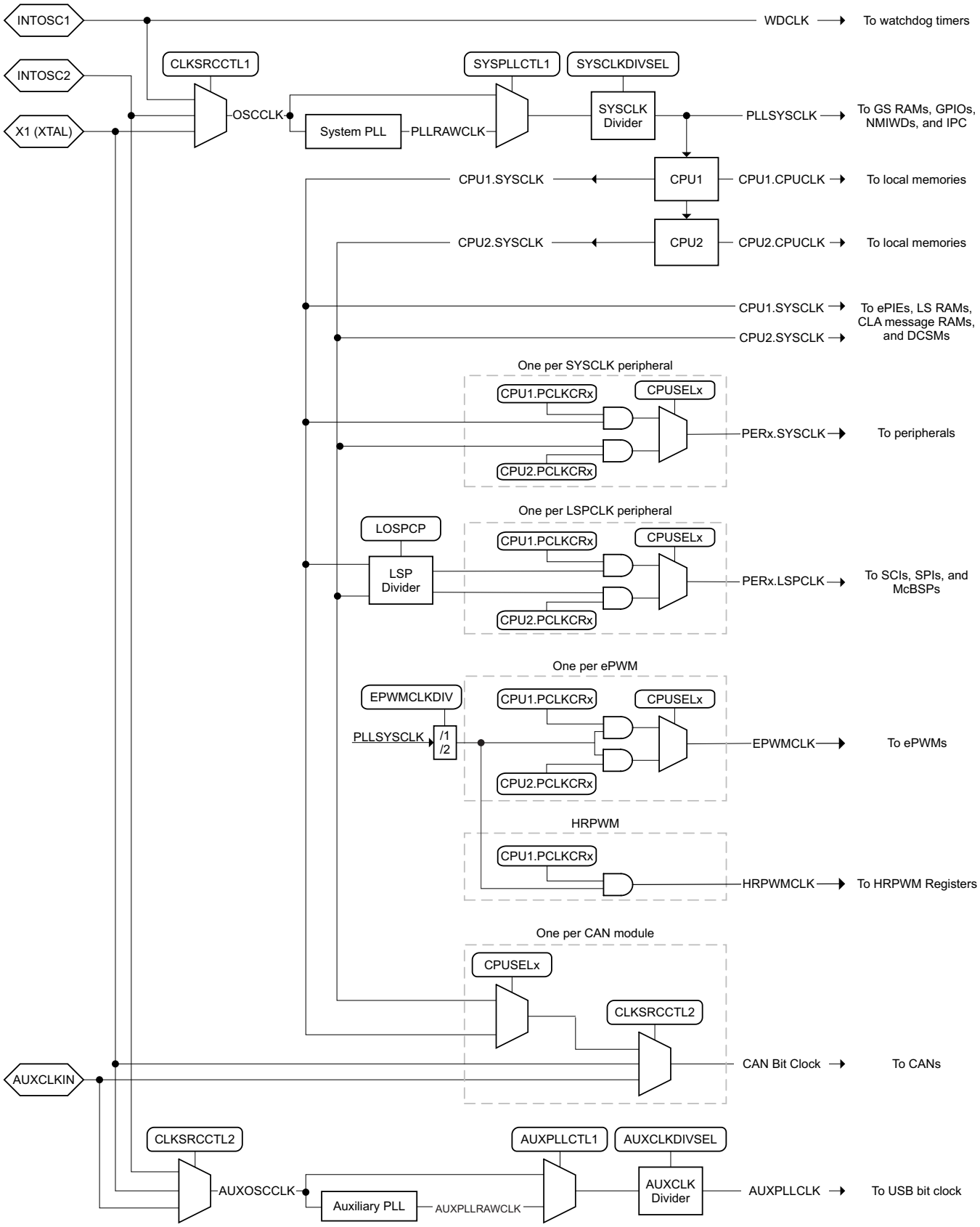


**图 5-7. Clocking System**


版权 © 2013–2020, Texas Instruments Incorporated

#### 5.9.3.2 Clock Frequencies, Requirements, and Characteristics

This section provides the frequencies and timing requirements of the input clocks, PLL lock times, frequencies of the internal clocks, and the frequency and switching characteristics of the output clock.

##### *5.9.3.2.1 Input Clock Frequency and Timing Requirements, PLL Lock Times*

表 5-7 shows the frequency requirements for the input clocks. 表 5-16 shows the crystal equivalent series resistance requirements. 表 5-8 shows the X1 input level characteristics when using an external clock source. 表 5-9 and 表 5-10 show the timing requirements for the input clocks. 表 5-11 shows the PLL lock times for the Main PLL and the USB PLL.

**表 5-7. Input Clock Frequency**

| | | MIN | MAX | UNIT |
|---|---|---|---|---|
| $f_{(XTAL)}$ | Frequency, X1/X2, from external crystal or resonator | 10 | 20 | MHz |
| $f_{(X1)}$ | Frequency, X1, from external oscillator | 2 | 25 | MHz |
| $f_{(AUXI)}$ | Frequency, AUXCLKIN, from external oscillator | 2 | 60 | MHz |

**表 5-8. X1 Input Level Characteristics When Using an External Clock Source (Not a Crystal)**

over recommended operating conditions (unless otherwise noted)

| PARAMETER | | MIN | MAX | UNIT |
|---|---|---|---|---|
| X1 $V_{IL}$ | Valid low-level input voltage | –0.3 | 0.3 * $V_{DDIO}$ | V |
| X1 $V_{IH}$ | Valid high-level input voltage | 0.7 * $V_{DDIO}$ | $V_{DDIO}$ + 0.3 | V |

**表 5-9. X1 Timing Requirements**

| | | MIN | MAX | UNIT |
|---|---|---|---|---|
| $t_{f(X1)}$ | Fall time, X1 | | 6 | ns |
| $t_{r(X1)}$ | Rise time, X1 | | 6 | ns |
| $t_{w(X1L)}$ | Pulse duration, X1 low as a percentage of $t_{c(X1)}$ | 45% | 55% | |
| $t_{w(X1H)}$ | Pulse duration, X1 high as a percentage of $t_{c(X1)}$ | 45% | 55% | |

**表 5-10. AUXCLKIN Timing Requirements**

| | | MIN | MAX | UNIT |
|---|---|---|---|---|
| $t_{f(AUXI)}$ | Fall time, AUXCLKIN | | 6 | ns |
| $t_{r(AUXI)}$ | Rise time, AUXCLKIN | | 6 | ns |
| $t_{w(AUXL)}$ | Pulse duration, AUXCLKIN low as a percentage of $t_{c(XCI)}$ | 45% | 55% | |
| $t_{w(AUXH)}$ | Pulse duration, AUXCLKIN high as a percentage of $t_{c(XCI)}$ | 45% | 55% | |

**表 5-11. PLL Lock Times**

| | | MIN | NOM | MAX | UNIT |
|---|---|---|---|---|---|
| $t_{(PLL)}$ | Lock time, Main PLL (X1, from external oscillator) | | 50 µs + 2500 * $t_{c(OSCCLK)}$ (1) | | µs |
| $t_{(USB)}$ | Lock time, USB PLL (AUXCLKIN, from external oscillator) | | 50 µs + 2500 * $t_{c(OSCCLK)}$ (1) | | µs |

(1) The PLL lock time here defines the typical time of execution for the PLL workaround as defined in the *TMS320F2837xD Dual-Core MCUs Silicon Errata*. Cycle count includes code execution of the PLL initialization routine, which could vary depending on compiler optimizations and flash wait states. TI recommends using the latest example software from C2000Ware for initializing the PLLs. For the system PLL, see InitSysPll() or SysCtl_setClock(). For the auxillary PLL, see InitAuxPll() or SysCtl_setAuxClock().

#### 5.9.3.2.2 Internal Clock Frequencies

表 5-12 provides the clock frequencies for the internal clocks.

**表 5-12. Internal Clock Frequencies**

| | | MIN | NOM | MAX | UNIT |
|---|---|---|---|---|---|
| $f_{(SYSCLK)}$ | Frequency, device (system) clock | 2 | | 200 (1) | MHz |
| $t_{c(SYSCLK)}$ | Period, device (system) clock | 5 (1) | | 500 | ns |
| $f_{(PLLRAWCLK)}$ | Frequency, system PLL output (before SYSCLK divider) | 120 | | 400 | MHz |
| $f_{(AUXPLLRAWCLK)}$ | Frequency, auxiliary PLL output (before AUXCLK divider) | 120 | | 400 | MHz |
| $f_{(AUXPLL)}$ | Frequency, AUXPLLCLK | 2 | 60 | 60 | MHz |
| $f_{(PLL)}$ | Frequency, PLLSYSCLK | 2 | | 200 (1) | MHz |
| $f_{(LSP)}$ | Frequency, LSPCLK | 2 | | 200 (1) | MHz |
| $t_{c(LSPCLK)}$ | Period, LSPCLK | 5 (1) | | 500 | ns |
| $f_{(OSCCLK)}$ | Frequency, OSCCLK (INTOSC1 or INTOSC2 or XTAL or X1) | See respective clock | | | MHz |
| $f_{(EPWM)}$ | Frequency, EPWMCLK (2) | | | 100 | MHz |
| $f_{(HRPWM)}$ | Frequency, HRPWMCLK | 60 | | 100 | MHz |

(1) Using an external clock source. If INTOSC1 or INTOSC2 is used as the clock source, then the maximum frequency is 194 MHz and the minimum period is 5.15 ns.
(2) For SYSCLK above 100 MHz, the EPWMCLK must be half of SYSCLK.

#### 5.9.3.2.3 Output Clock Frequency and Switching Characteristics

表 5-13 provides the frequency of the output clock. 表 5-14 shows the switching characteristics of the output clock, XCLKOUT.

**表 5-13. Output Clock Frequency**

| | | MIN | MAX | UNIT |
|---|---|---|---|---|
| $f_{(XCO)}$ | Frequency, XCLKOUT | | 50 | MHz |

**表 5-14. XCLKOUT Switching Characteristics (PLL Bypassed or Enabled) (1) (2)**

over recommended operating conditions (unless otherwise noted)

| PARAMETER | | MIN | MAX | UNIT |
|---|---|---|---|---|
| $t_{f(XCO)}$ | Fall time, XCLKOUT | | 5 | ns |
| $t_{r(XCO)}$ | Rise time, XCLKOUT | | 5 | ns |
| $t_{w(XCOL)}$ | Pulse duration, XCLKOUT low | H – 2 | H + 2 | ns |
| $t_{w(XCOH)}$ | Pulse duration, XCLKOUT high | H – 2 | H + 2 | ns |

(1) A load of 40 pF is assumed for these parameters.
(2) $H = 0.5t_{c(XCO)}$


版权 © 2013–2020, Texas Instruments Incorporated

#### 5.9.3.3 Input Clocks and PLLs

In addition to the internal 0-pin oscillators, multiple external clock source options are available. 图 5-8 shows the recommended methods of connecting crystals, resonators, and oscillators to pins X1/X2 (also referred to as XTAL) and AUXCLKIN.

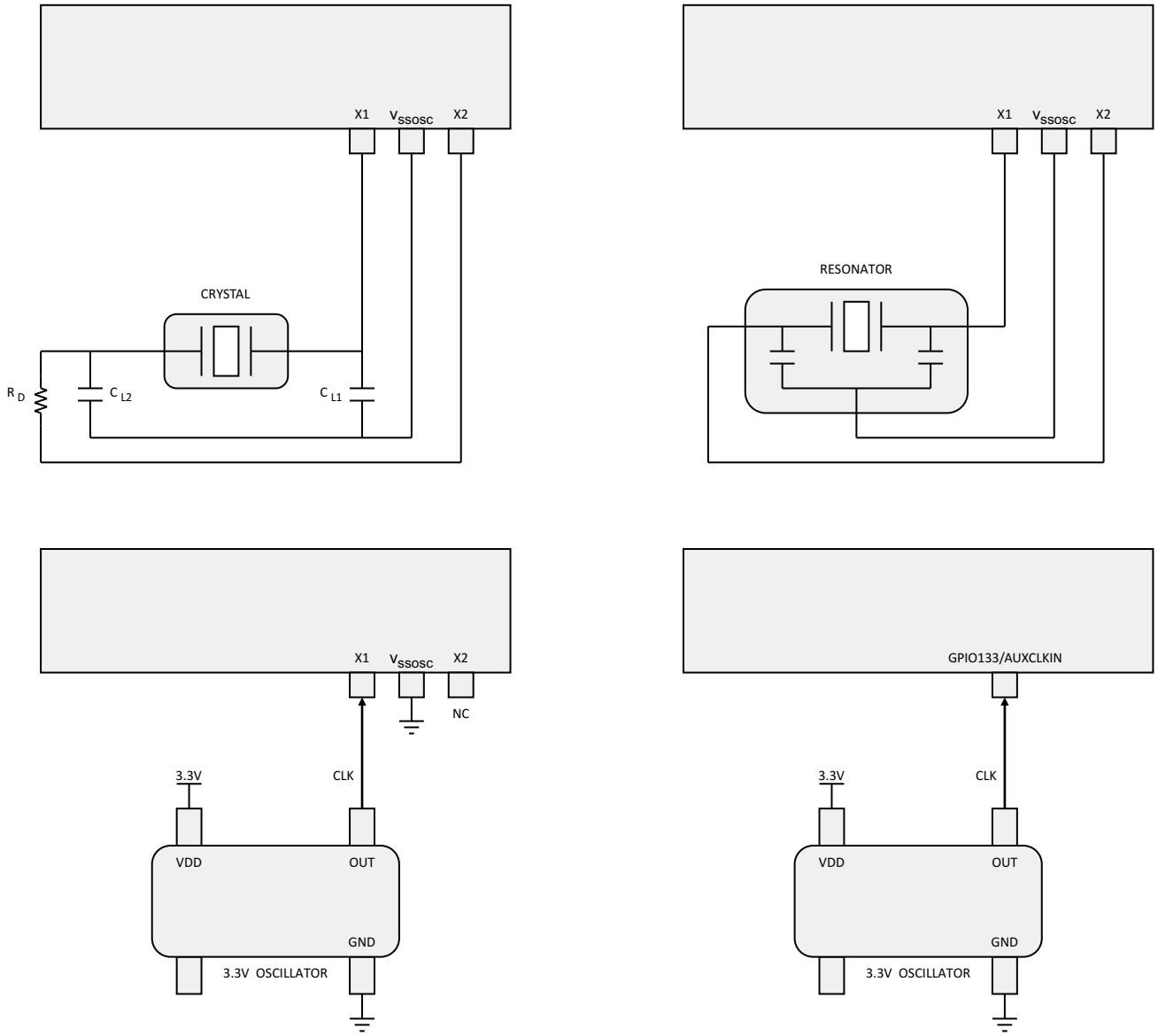


**图 5-8. Connecting Input Clocks to a 2837xD Device**

#### 5.9.3.4 Crystal Oscillator

When using a quartz crystal, it may be necessary to include a damping resistor ($R_D$) in the crystal circuit to prevent over-driving the crystal (drive level can be found in the crystal data sheet). In higher-frequency applications (10 MHz or greater), $R_D$ is generally not required. If a damping resistor is required, $R_D$ should be as small as possible because the size of the resistance affects start-up time (smaller $R_D$ = faster start-up time). TI recommends that the crystal manufacturer characterize the crystal with the application board. 表 5-15 shows the crystal oscillator parameters. 表 5-16 shows the crystal equivalent series resistance (ESR) requirements. 表 5-17 shows the crystal oscillator electrical characteristics.

**表 5-15. Crystal Oscillator Parameters**

| | | MIN | MAX | UNIT |
|---|---|---|---|---|
| CL1, CL2 | Load capacitance | 12 | 24 | pF |
| C0 | Crystal shunt capacitance | | 7 | pF |

**表 5-16. Crystal Equivalent Series Resistance (ESR) Requirements (1) (2)**

| CRYSTAL FREQUENCY (MHz) | MAXIMUM ESR (Ω) (CL1 = CL2 = 12 pF) | MAXIMUM ESR (Ω) (CL1 = CL2 = 24 pF) |
|---|---|---|
| 10 | 55 | 110 |
| 12 | 50 | 95 |
| 14 | 50 | 90 |
| 16 | 45 | 75 |
| 18 | 45 | 65 |
| 20 | 45 | 50 |

(1) Crystal shunt capacitance (C0) should be less than or equal to 7 pF.
(2) ESR = Negative Resistance/3

**表 5-17. Crystal Oscillator Electrical Characteristics**

over recommended operating conditions (unless otherwise noted)

| PARAMETER | TEST CONDITIONS | MIN | TYP | MAX | UNIT |
|---|---|---|---|---|---|
| Start-up time (1) | f = 20 MHz<br>ESR MAX = 50 Ω<br>CL1 = CL2 = 24 pF<br>C0 = 7 pF | | 2 | | ms |
| Crystal drive level (DL) | | | | 1 | mW |

(1) Start-up time is dependent on the crystal and tank circuit components. TI recommends that the crystal vendor characterize the application with the chosen crystal.


版权 © 2013–2020, Texas Instruments Incorporated

#### 5.9.3.5 Internal Oscillators

To reduce production board costs and application development time, all F2837xD devices contain two independent internal oscillators, referred to as INTOSC1 and INTOSC2. By default, both oscillators are enabled at power up. INTOSC2 is set as the source for the system reference clock (OSCCLK) and INTOSC1 is set as the backup clock source. INTOSC1 can also be manually configured as the system reference clock (OSCCLK). Table 5-18 provides the electrical characteristics of the internal oscillators to determine if this module meets the clocking requirements of the application.

Table 5-18 provides the electrical characteristics of the two internal oscillators.

**NOTE**

This oscillator cannot be used as the PLL source if the PLLSYSCLK is configured to frequencies above 194 MHz.

**Table 5-18. Internal Oscillator Electrical Characteristics**

over recommended operating conditions (unless otherwise noted)

| PARAMETER | | TEST CONDITIONS | MIN | TYP | MAX | UNIT |
|---|---|---|---|---|---|---|
| $f_{(INTOSC)}$ | Frequency, INTOSC1 and INTOSC2 | | 9.7 | 10.0 | 10.3 | MHz |
| $f_{(INTOSC\text{-}STABILITY)}$ | Frequency stability at room temperature | 30ºC, Nominal $V_{DD}$ | | ±0.1% | | |
| | Frequency stability over $V_{DD}$ | 30ºC | | ±0.2% | | |
| | Frequency stability | | –3.0% | | 3.0% | |
| $f_{(INTOSC\text{-}ST)}$ | Start-up and settling time | | | | 20 | µs |

### 5.9.4 Flash Parameters

The on-chip flash memory is tightly integrated to the CPU, allowing code execution directly from flash through 128-bit-wide prefetch reads and a pipeline buffer. Flash performance for sequential code is equal to execution from RAM. Factoring in discontinuities, most applications will run with an efficiency of approximately 80% relative to code executing from RAM. This flash efficiency lets designers realize a 2× improvement in performance when migrating from the previous generation of MCUs.

This device also has an OTP (One-Time-Programmable) sector used for the dual code security module (DCSM), which cannot be erased after it is programmed.

表 5-19 shows the minimum required flash wait states at different frequencies. 表 5-20 shows the flash parameters.

**表 5-19. Flash Wait States**

| CPUCLK (MHz) | | MINIMUM WAIT STATES (1) |
|---|---|---|
| EXTERNAL OSCILLATOR OR CRYSTAL | INTOSC1 OR INTOSC2 | |
| 150 < CPUCLK ≤ 200 | 145 < CPUCLK ≤ 194 | 3 |
| 100 < CPUCLK ≤ 150 | 97 < CPUCLK ≤ 145 | 2 |
| 50 < CPUCLK ≤ 100 | 48 < CPUCLK ≤ 97 | 1 |
| CPUCLK ≤ 50 | CPUCLK ≤ 48 | 0 |

(1) Minimum required FRDCNTL[RWAIT].

**表 5-20. Flash Parameters**

| PARAMETER | | | MIN | TYP | MAX | UNIT |
|---|---|---|---|---|---|---|
| | Program Time(1) | 128 data bits + 16 ECC bits | | 40 | 300 | µs |
| | | 8KW sector | | 90 | 180 | ms |
| | | 32KW sector | | 360 | 720 | ms |
| | Erase Time(2) at < 25 cycles | 8KW sector | | 25 | 50 | ms |
| | | 32KW sector | | 30 | 55 | |
| | Erase Time(2) at 20k cycles | 8KW sector | | 105 | 4000 | ms |
| | | 32KW sector | | 110 | 4000 | |
| $N_{wec}$ | Write/erase cycles | | | | 20000 | cycles |
| $t_{retention}$ | Data retention duration at $T_J$ = 85°C | | 20 | | | years |

(1) Program time is at the maximum device frequency. Program time includes overhead of the flash state machine but does not include the time to transfer the following into RAM:
- Code that uses flash API to program the flash
- Flash API itself
- Flash data to be programmed

In other words, the time indicated in this table is applicable after all the required code/data is available in the device RAM, ready for programming. The transfer time will significantly vary depending on the speed of the debug probe used.
Program time calculation is based on programming 144 bits at a time at the specified operating frequency. Program time includes Program verify by the CPU. The program time does not degrade with write/erase (W/E) cycling, but the erase time does.
Erase time includes Erase verify by the CPU and does not involve any data transfer.

(2) Erase time includes Erase verify by the CPU.

**注**

The Main Array flash programming must be aligned to 64-bit address boundaries and each 64-bit word may only be programmed once per write/erase cycle. For more details, see the "Flash: Minimum Programming Word Size" advisory in the *TMS320F2837xD Dual-Core MCUs Silicon Errata*.


版权 © 2013–2020, Texas Instruments Incorporated

### 5.9.5 Emulation/JTAG

The JTAG port has five dedicated pins: $\overline{\text{TRST}}$, TMS, TDI, TDO, and TCK. The $\overline{\text{TRST}}$ signal should always be pulled down through a 2.2-kΩ pulldown resistor on the board. This MCU does not support the EMU0 and EMU1 signals that are present on 14-pin and 20-pin emulation headers. These signals should always be pulled up at the emulation header through a pair of board pullup resistors ranging from 2.2 kΩ to 4.7 kΩ (depending on the drive strength of the debugger ports). Typically, a 2.2-kΩ value is used.

See 图 5-9 to see how the 14-pin JTAG header connects to the MCU's JTAG port signals. 图 5-10 shows how to connect to the 20-pin header. The 20-pin JTAG header terminals EMU2, EMU3, and EMU4 are not used and should be grounded.

The PD (Power Detect) terminal of the debug probe header should be connected to the board 3.3-V supply. Header GND terminals should be connected to board ground. TDIS (Cable Disconnect Sense) should also be connected to board ground. The JTAG clock should be looped from the header TCK output terminal back to the RTCK input terminal of the header (to sense clock continuity by the debug probe). Header terminal $\overline{\text{RESET}}$ is an open-drain output from the debug probe header that enables board components to be reset through debug probe commands (available only through the 20-pin header).

Typically, no buffers are needed on the JTAG signals when the distance between the MCU target and the JTAG header is smaller than 6 inches (15.24 cm), and no other devices are present on the JTAG chain. Otherwise, each signal should be buffered. Additionally, for most debug probe operations at 10 MHz, no series resistors are needed on the JTAG signals. However, if high emulation speeds are expected (35 MHz or so), 22-Ω resistors should be placed in series on each JTAG signal.

For more information about hardware breakpoints and watchpoints, see Hardware Breakpoints and Watchpoints for C28x in CCS.

For more information about JTAG emulation, see the *XDS Target Connection Guide*.

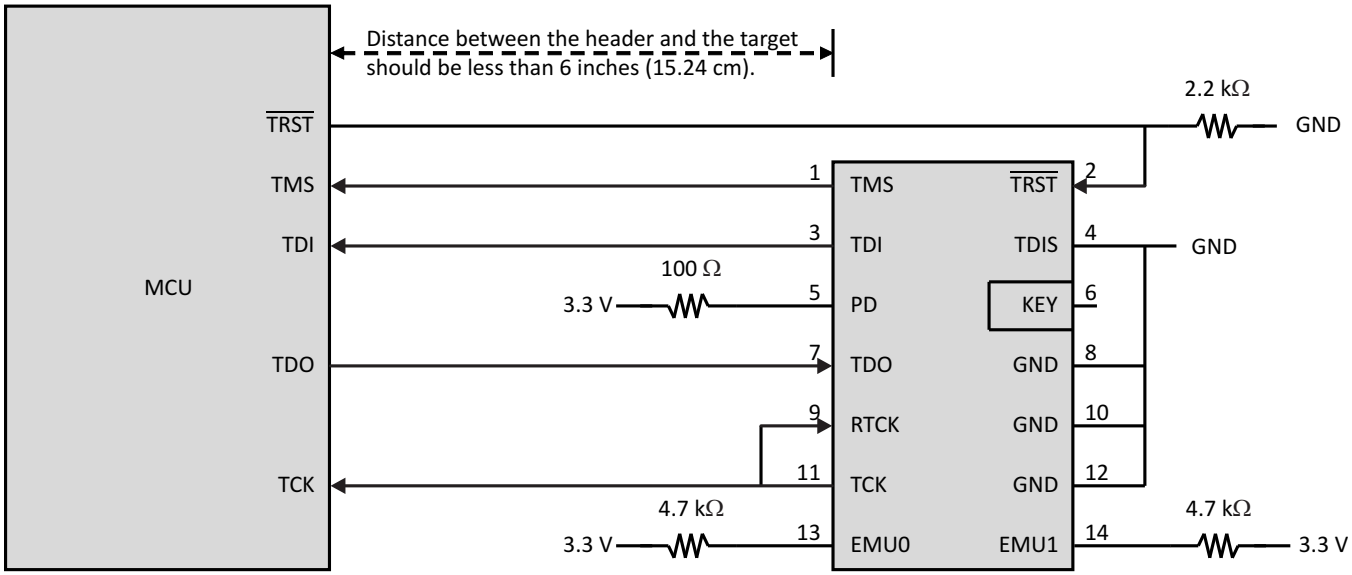


**图 5-9. Connecting to the 14-Pin JTAG Header**

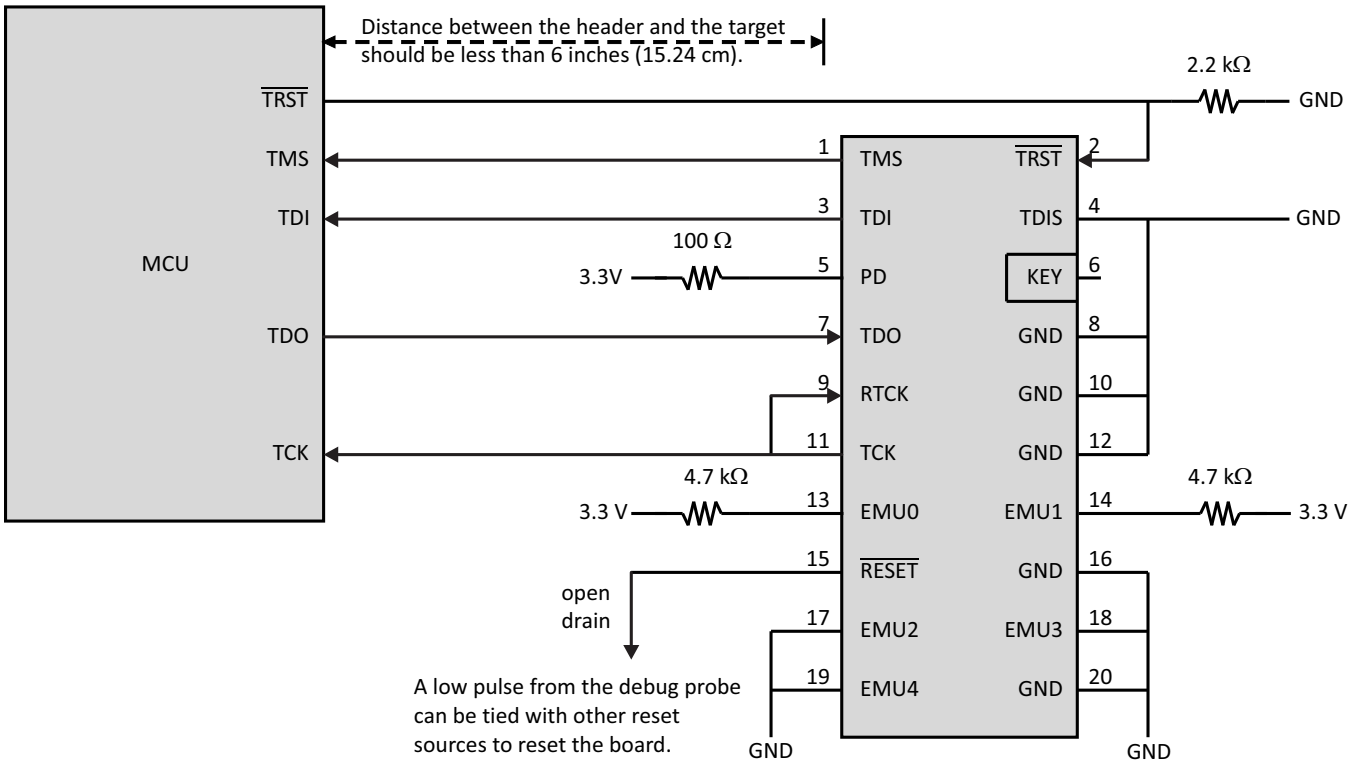


**图 5-10. Connecting to the 20-Pin JTAG Header**


版权 © 2013–2020, Texas Instruments Incorporated

#### 5.9.5.1 JTAG Electrical Data and Timing

表 5-21 lists the JTAG timing requirements. 表 5-22 lists the JTAG switching characteristics. 图 5-11 shows the JTAG timing.

**表 5-21. JTAG Timing Requirements**

| NO. | | | MIN | MAX | UNIT |
|---|---|---|---|---|---|
| 1 | $t_{c(TCK)}$ | Cycle time, TCK | 66.66 | | ns |
| 1a | $t_{w(TCKH)}$ | Pulse duration, TCK high (40% of $t_c$) | 26.66 | | ns |
| 1b | $t_{w(TCKL)}$ | Pulse duration, TCK low (40% of $t_c$) | 26.66 | | ns |
| 3 | $t_{su(TDI-TCKH)}$ | Input setup time, TDI valid to TCK high | 13 | | ns |
| | $t_{su(TMS-TCKH)}$ | Input setup time, TMS valid to TCK high | 13 | | ns |
| 4 | $t_{h(TCKH-TDI)}$ | Input hold time, TDI valid from TCK high | 7 | | ns |
| | $t_{h(TCKH-TMS)}$ | Input hold time, TMS valid from TCK high | 7 | | ns |

**表 5-22. JTAG Switching Characteristics**

over recommended operating conditions (unless otherwise noted)

| NO. | PARAMETER | | MIN | MAX | UNIT |
|---|---|---|---|---|---|
| 2 | $t_{d(TCKL-TDO)}$ | Delay time, TCK low to TDO valid | 6 | 25 | ns |

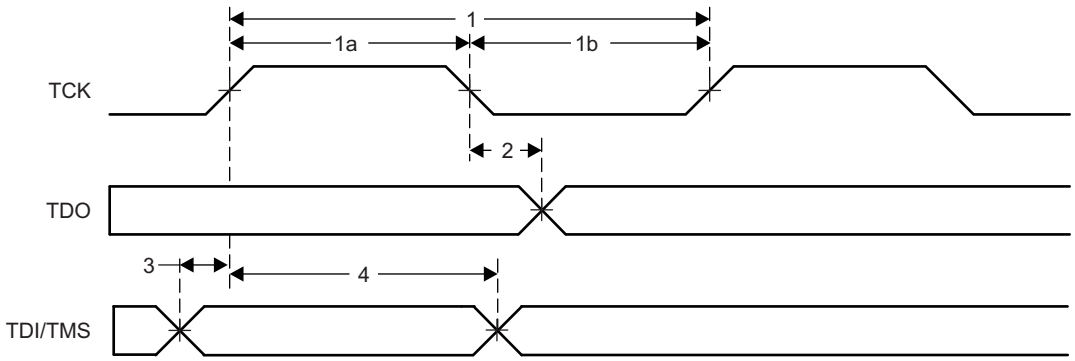


**图 5-11. JTAG Timing**

### 5.9.6 GPIO Electrical Data and Timing

The peripheral signals are multiplexed with general-purpose input/output (GPIO) signals. On reset, GPIO pins are configured as inputs. For specific inputs, the user can also select the number of input qualification cycles to filter unwanted noise glitches.

The GPIO module contains an Output X-BAR which allows an assortment of internal signals to be routed to a GPIO in the GPIO mux positions denoted as OUTPUTXBARx. The GPIO module also contains an Input X-BAR which is used to route signals from any GPIO input to different IP blocks such as the ADC(s), eCAP(s), ePWM(s), and external interrupts. For more details, see the X-BAR chapter in the *TMS320F2837xD Dual-Core Microcontrollers Technical Reference Manual*.

#### 5.9.6.1 GPIO - Output Timing

Table 5-23 shows the general-purpose output switching characteristics. Figure 5-12 shows the general-purpose output timing.

**Table 5-23. General-Purpose Output Switching Characteristics**

over recommended operating conditions (unless otherwise noted)

| PARAMETER | | | MIN | MAX | UNIT |
|---|---|---|---|---|---|
| $t_{r(GPO)}$ | Rise time, GPIO switching low to high | All GPIOs | | 8 (1) | ns |
| $t_{f(GPO)}$ | Fall time, GPIO switching high to low | All GPIOs | | 8 (1) | ns |
| $t_{fGPO}$ | Toggling frequency, GPO pins | | | 25 | MHz |

(1) Rise time and fall time vary with load. These values assume a 40-pF load.

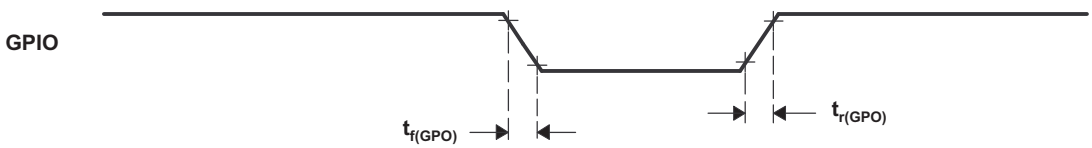


**Figure 5-12. General-Purpose Output Timing**


Copyright © 2013–2020, Texas Instruments Incorporated

#### 5.9.6.2 GPIO - Input Timing

Table 5-24 shows the general-purpose input timing requirements. Figure 5-13 shows the sampling mode.

**Table 5-24. General-Purpose Input Timing Requirements**

| | | | MIN | MAX | UNIT |
|---|---|---|---|---|---|
| $t_{w(SP)}$ | Sampling period | QUALPRD = 0 | $1t_{c(SYSCLK)}$ | | cycles |
| | | QUALPRD ≠ 0 | $2t_{c(SYSCLK)}$ * QUALPRD | | cycles |
| $t_{w(IQSW)}$ | Input qualifier sampling window | | $t_{w(SP)}$ * (n(1) – 1) | | cycles |
| $t_{w(GPI)}$ (2) | Pulse duration, GPIO low/high | Synchronous mode | $2t_{c(SYSCLK)}$ | | cycles |
| | | With input qualifier | $t_{w(IQSW)}$ + $t_{w(SP)}$ + $1t_{c(SYSCLK)}$ | | cycles |

(1) "n" represents the number of qualification samples as defined by GPxQSELn register.
(2) For $t_{w(GPI)}$, pulse width is measured from $V_{IL}$ to $V_{IL}$ for an active low signal and $V_{IH}$ to $V_{IH}$ for an active high signal.

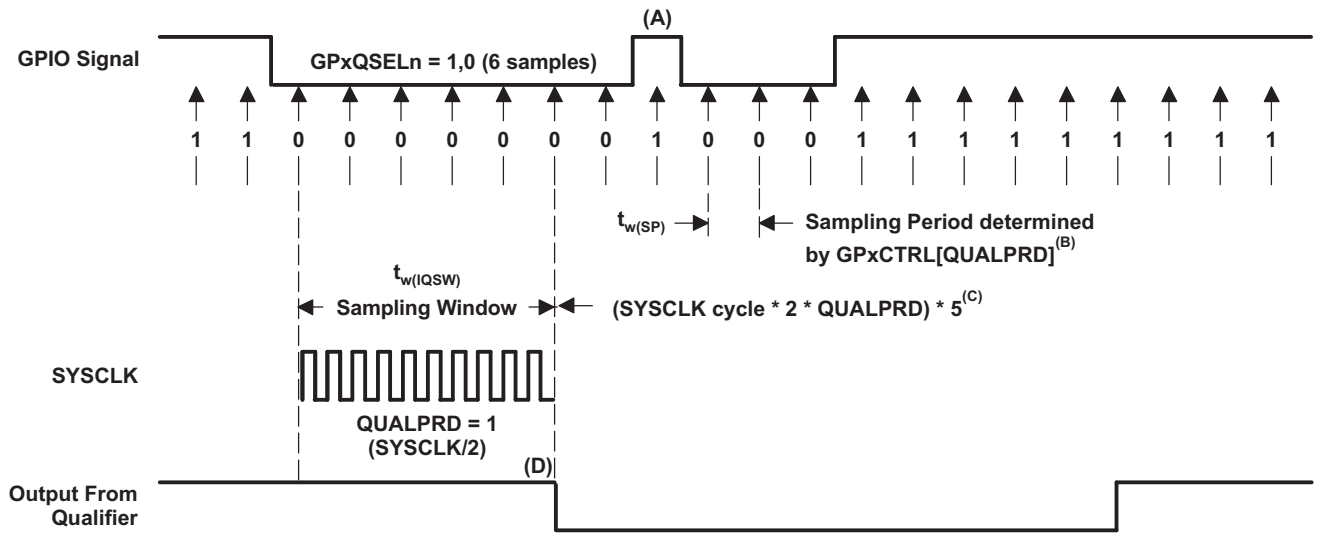


A. This glitch will be ignored by the input qualifier. The QUALPRD bit field specifies the qualification sampling period. It can vary from 00 to 0xFF. If QUALPRD = 00, then the sampling period is 1 SYSCLK cycle. For any other value "n", the qualification sampling period in 2n SYSCLK cycles (that is, at every 2n SYSCLK cycles, the GPIO pin will be sampled).

B. The qualification period selected through the GPxCTRL register applies to groups of 8 GPIO pins.

C. The qualification block can take either three or six samples. The GPxQSELn Register selects which sample mode is used.

D. In the example shown, for the qualifier to detect the change, the input should be stable for 10 SYSCLK cycles or greater. In other words, the inputs should be stable for (5 x QUALPRD x 2) SYSCLK cycles. This would ensure 5 sampling periods for detection to occur. Because external signals are driven asynchronously, an 13-SYSCLK-wide pulse ensures reliable recognition.

**Figure 5-13. Sampling Mode**

#### 5.9.6.3 Sampling Window Width for Input Signals

The following section summarizes the sampling window width for input signals for various input qualifier configurations.

Sampling frequency denotes how often a signal is sampled with respect to SYSCLK.

Sampling frequency = SYSCLK/(2 × QUALPRD), if QUALPRD ≠ 0 (1)

Sampling frequency = SYSCLK, if QUALPRD = 0 (2)

Sampling period = SYSCLK cycle × 2 × QUALPRD, if QUALPRD ≠ 0 (3)

In Equation 1, Equation 2, and Equation 3, SYSCLK cycle indicates the time period of SYSCLK.

Sampling period = SYSCLK cycle, if QUALPRD = 0

In a given sampling window, either 3 or 6 samples of the input signal are taken to determine the validity of the signal. This is determined by the value written to GPxQSELn register.

**Case 1:**

Qualification using 3 samples

Sampling window width = (SYSCLK cycle × 2 × QUALPRD) × 2, if QUALPRD ≠ 0

Sampling window width = (SYSCLK cycle) × 2, if QUALPRD = 0

**Case 2:**

Qualification using 6 samples

Sampling window width = (SYSCLK cycle × 2 × QUALPRD) × 5, if QUALPRD ≠ 0

Sampling window width = (SYSCLK cycle) × 5, if QUALPRD = 0

Figure 5-14 shows the general-purpose input timing.

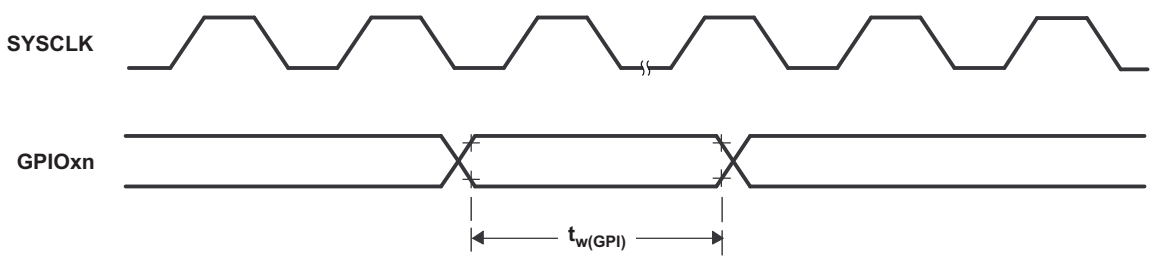


**Figure 5-14. General-Purpose Input Timing**


版权 © 2013–2020, Texas Instruments Incorporated

### 5.9.7 Interrupts

图 5-15 provides a high-level view of the interrupt architecture.

As shown in 图 5-15, the devices support five external interrupts (XINT1 to XINT5) that can be mapped onto any of the GPIO pins.

In this device, 16 ePIE block interrupts are grouped into 1 CPU interrupt. In total, there are 12 CPU interrupt groups, with 16 interrupts per group.

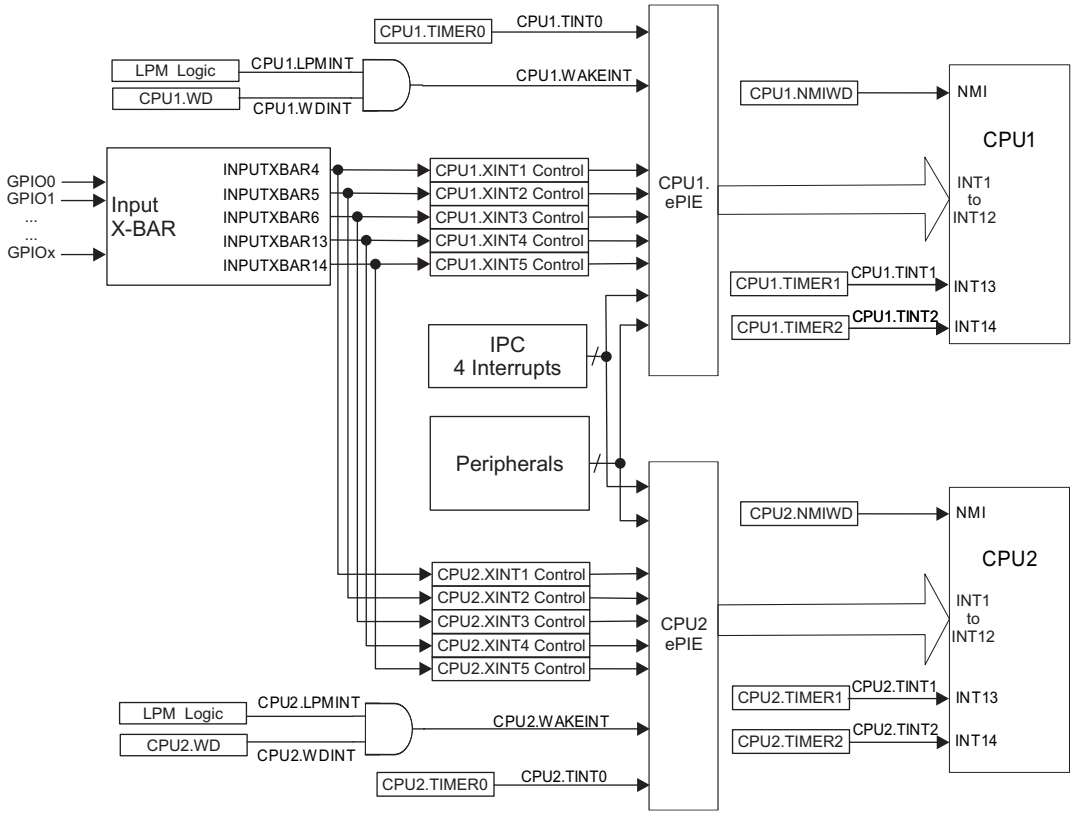


**图 5-15. External and ePIE Interrupt Sources**

#### 5.9.7.1 External Interrupt (XINT) Electrical Data and Timing

Table 5-25 lists the external interrupt timing requirements. Table 5-26 lists the external interrupt switching characteristics. Figure 5-16 shows the external interrupt timing.

**Table 5-25. External Interrupt Timing Requirements(1)**

| | | | MIN | MAX | UNIT |
|---|---|---|---|---|---|
| $t_{w(INT)}$ | Pulse duration, INT input low/high | Synchronous | $2t_{c(SYSCLK)}$ | | cycles |
| | | With qualifier | $t_{w(IQSW)} + t_{w(SP)} + 1t_{c(SYSCLK)}$ | | cycles |

(1) For an explanation of the input qualifier parameters, see Table 5-24.

**Table 5-26. External Interrupt Switching Characteristics(1)**

over recommended operating conditions (unless otherwise noted)

| PARAMETER | | MIN | MAX | UNIT |
|---|---|---|---|---|
| $t_{d(INT)}$ | Delay time, INT low/high to interrupt-vector fetch(2) | $t_{w(IQSW)} + 14t_{c(SYSCLK)}$ | $t_{w(IQSW)} + t_{w(SP)} + 14t_{c(SYSCLK)}$ | cycles |

(1) For an explanation of the input qualifier parameters, see Table 5-24.
(2) This assumes that the ISR is in a single-cycle memory.

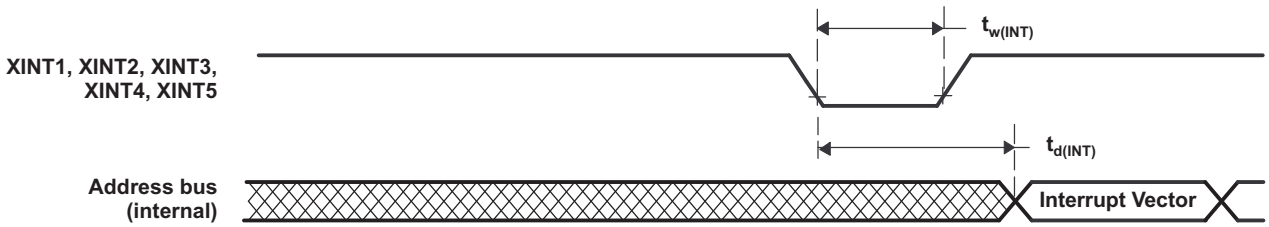


**Figure 5-16. External Interrupt Timing**


版权 © 2013–2020, Texas Instruments Incorporated

### 5.9.8 Low-Power Modes

This device has three clock-gating low-power modes and a special power-gating mode.

Further details, as well as the entry and exit procedure, for all of the low-power modes can be found in the Low Power Modes section of the *TMS320F2837xD Dual-Core Microcontrollers Technical Reference Manual*.

#### 5.9.8.1 Clock-Gating Low-Power Modes

IDLE, STANDBY, and HALT modes on this device are similar to those on other C28x devices. 表 5-27 describes the effect on the system when any of the clock-gating low-power modes are entered.

**表 5-27. Effect of Clock-Gating Low-Power Modes on the Device**

| MODULES/ CLOCK DOMAIN | CPU1 IDLE | CPU1 STANDBY | CPU2 IDLE | CPU2 STANDBY | HALT |
|---|---|---|---|---|---|
| CPU1.CLKIN | Active | Gated | N/A | N/A | Gated |
| CPU1.SYSCLK | Active | Gated | N/A | N/A | Gated |
| CPU1.CPUCLK | Gated | Gated | N/A | N/A | Gated |
| CPU2.CLKIN | N/A | N/A | Active | Gated | Gated |
| CPU2.SYSCLK | N/A | N/A | Active | Gated | Gated |
| CPU2.CPUCLK | N/A | N/A | Gated | Gated | Gated |
| Clock to modules Connected to PERx.SYSCLK | Active | Gated if CPUSEL.PERx = CPU1 | Active | Gated if CPUSEL.PERx = CPU2 | Gated |
| CPU1.WDCLK | Active | Active | N/A | N/A | Gated if CLKSRCCTL1.WDHALTI = 0 |
| CPU2.WDCLK | N/A | N/A | Active | Active | Gated |
| AUXPLLCLK | Active | Active | Active | Active | Gated |
| PLL | Powered | Powered | Powered | Powered | Software must power down PLL before entering HALT |
| INTOSC1 | Powered | Powered | Powered | Powered | Powered down if CLKSRCCTL1.WDHALTI = 0 |
| INTOSC2 | Powered | Powered | Powered | Powered | Powered down if CLKSRCCTL1.WDHALTI = 0 |
| Flash | Powered | Powered | Powered | Powered | Software-Controlled |
| X1/X2 Crystal Oscillator | Powered | Powered | Powered | Powered | Powered-Down |

#### 5.9.8.2 Power-Gating Low-Power Modes

HIBERNATE mode is the lowest power mode on this device. It is a global low-power mode that gates the supply voltages to most of the system. HIBERNATE is essentially a controlled power-down with remote wakeup capability, and can be used to save power during long periods of inactivity. 表 5-28 describes the effects on the system when the HIBERNATE mode is entered.

**表 5-28. Effect of Power-Gating Low-Power Mode on the Device**

| MODULES/POWER DOMAINS | HIBERNATE |
|---|---|
| M0 and M1 memories | • Remain on with memory retention if LPMCR.M0M1MODE = 0x00<br>• Are off when LPMCR.M0M1MODE = 0x01 |
| CPU1, CPU2, digital peripherals | Powered down |
| Dx, LSx, GSx memories | Power down, memory contents are lost |
| I/Os | On with output state preserved |
| Oscillators, PLL, analog peripherals, Flash | Enters Low-Power Mode |

#### 5.9.8.3 Low-Power Mode Wakeup Timing

表 5-29 shows the IDLE mode timing requirements, 表 5-30 shows the switching characteristics, and 图 5-17 shows the timing diagram for IDLE mode.

**表 5-29. IDLE Mode Timing Requirements(1)**

| | | | MIN | MAX | UNIT |
|---|---|---|---|---|---|
| $t_{w(WAKE)}$ | Pulse duration, external wake-up signal | Without input qualifier | $2t_{c(SYSCLK)}$ | | cycles |
| | | With input qualifier | $2t_{c(SYSCLK)} + t_{w(IQSW)}$ | | |

(1) For an explanation of the input qualifier parameters, see Table 5-24.

**表 5-30. IDLE Mode Switching Characteristics(1)**

over recommended operating conditions (unless otherwise noted)

| PARAMETER | | TEST CONDITIONS | MIN | MAX | UNIT |
|---|---|---|---|---|---|
| $t_{d(WAKE-IDLE)}$ | Delay time, external wake signal to program execution resume (2) | | | | cycles |
| | • Wakeup from Flash<br>– Flash module in active state | Without input qualifier | $40t_{c(SYSCLK)}$ | | |
| | | With input qualifier | $40t_{c(SYSCLK)} + t_{w(WAKE)}$ | | |
| | • Wakeup from Flash<br>– Flash module in sleep state | Without input qualifier | $6700t_{c(SYSCLK)}$ (3) | | |
| | | With input qualifier | $6700t_{c(SYSCLK)}$ (3) $+ t_{w(WAKE)}$ | | |
| | • Wakeup from RAM | Without input qualifier | $25t_{c(SYSCLK)}$ | | |
| | | With input qualifier | $25t_{c(SYSCLK)} + t_{w(WAKE)}$ | | |

(1) For an explanation of the input qualifier parameters, see Table 5-24.
(2) This is the time taken to begin execution of the instruction that immediately follows the IDLE instruction. Execution of an ISR (triggered by the wake-up signal) involves additional latency.
(3) This value is based on the flash power-up time, which is a function of the SYSCLK frequency, flash wait states (RWAIT), and FPAC1[PSLEEP]. For more information, see the Flash and OTP Power-Down Modes and Wakeup section of the *TMS320F2837xD Dual-Core Microcontrollers Technical Reference Manual*. This value can be realized when SYSCLK is 200 MHz, RWAIT is 3, and FPAC1[PSLEEP] is 0x860.

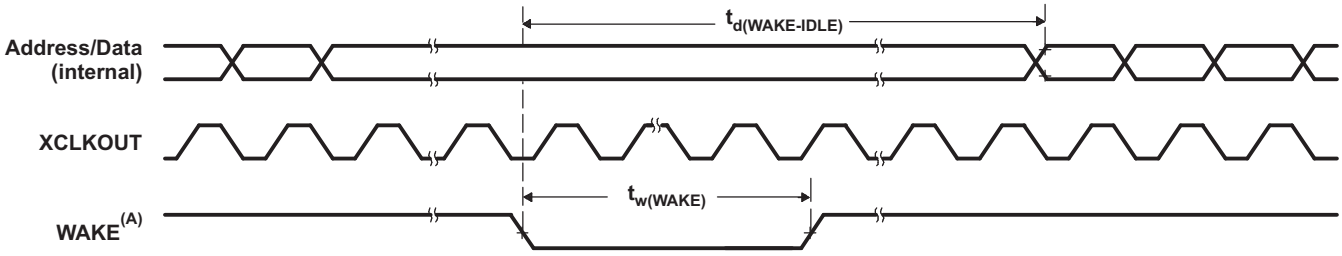


A. WAKE can be any enabled interrupt, $\overline{WDINT}$ or $\overline{XRS}$. After the IDLE instruction is executed, a delay of five OSCCLK cycles (minimum) is needed before the wake-up signal could be asserted.

**图 5-17. IDLE Entry and Exit Timing Diagram**


版权 © 2013–2020, Texas Instruments Incorporated

表 5-31 shows the STANDBY mode timing requirements, 表 5-32 shows the switching characteristics, and 图 5-18 shows the timing diagram for STANDBY mode.

### 表 5-31. STANDBY Mode Timing Requirements

| | | | MIN | MAX | UNIT |
|---|---|---|---|---|---|
| $t_{w(WAKE-INT)}$ | Pulse duration, external wake-up signal | QUALSTDBY = 0 \| $2t_{c(OSCCLK)}$ | $3t_{c(OSCCLK)}$ | | cycles |
| | | QUALSTDBY > 0 \| (2 + QUALSTDBY)$t_{c(OSCCLK)}$ (1) | (2 + QUALSTDBY) * $t_{c(OSCCLK)}$ | | |

(1) QUALSTDBY is a 6-bit field in the LPMCR register.

### 表 5-32. STANDBY Mode Switching Characteristics

over recommended operating conditions (unless otherwise noted)

| PARAMETER | | TEST CONDITIONS | MIN | MAX | UNIT |
|---|---|---|---|---|---|
| $t_{d(IDLE-XCOS)}$ | Delay time, IDLE instruction executed to XCLKOUT stop | | | $16t_{c(INTOSC1)}$ | cycles |
| $t_{d(WAKE-STBY)}$ | Delay time, external wake signal to program execution resume (1) | | | | cycles |
| | • Wakeup from flash<br>– Flash module in active state | | | $175t_{c(SYSCLK)} + t_{w(WAKE-INT)}$ | |
| | • Wakeup from flash<br>– Flash module in sleep state | | | $6700t_{c(SYSCLK)}$ (2) $+ t_{w(WAKE-INT)}$ | |
| | • Wakeup from RAM | | | $3t_{c(OSC)} + 15t_{c(SYSCLK)} + t_{w(WAKE-INT)}$ | |

(1) This is the time taken to begin execution of the instruction that immediately follows the IDLE instruction. Execution of an ISR (triggered by the wake-up signal) involves additional latency.
(2) This value is based on the flash power-up time, which is a function of the SYSCLK frequency, flash wait states (RWAIT), and FPAC1[PSLEEP]. For more information, see the Flash and OTP Power-Down Modes and Wakeup section of the *TMS320F2837xD Dual-Core Microcontrollers Technical Reference Manual*. This value can be realized when SYSCLK is 200 MHz, RWAIT is 3, and FPAC1[PSLEEP] is 0x860.

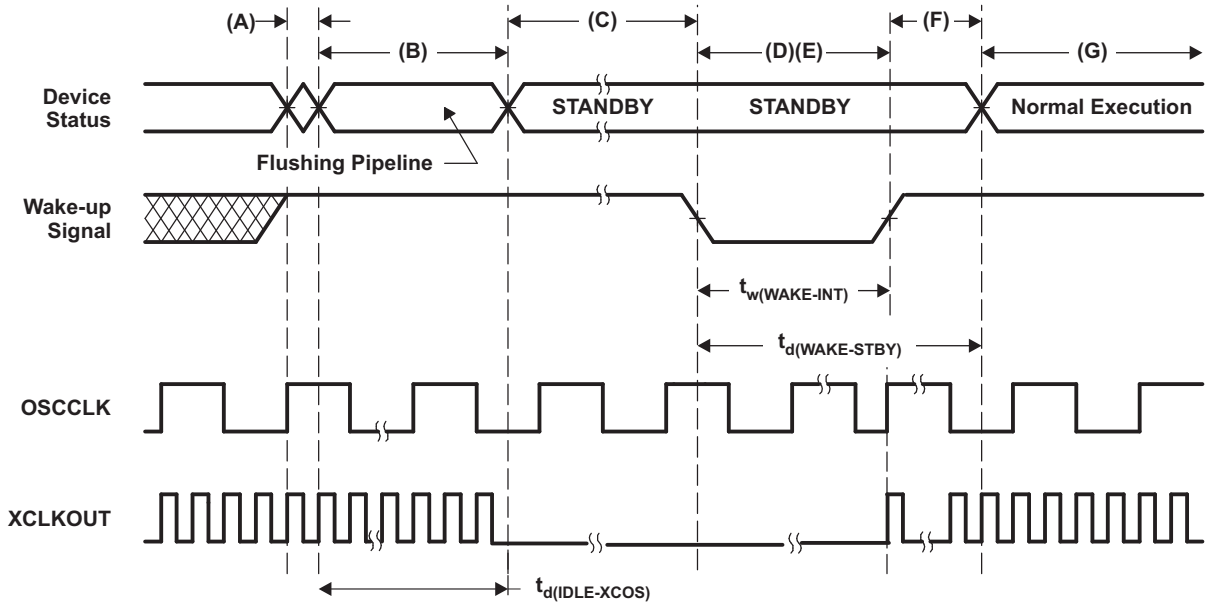


A. IDLE instruction is executed to put the device into STANDBY mode.
B. The LPM block responds to the STANDBY signal, SYSCLK is held for a maximum 16 INTOSC1 clock cycles before being turned off. This delay enables the CPU pipeline and any other pending operations to flush properly.
C. Clock to the peripherals are turned off. However, the PLL and watchdog are not shut down. The device is now in STANDBY mode. After the IDLE instruction is executed, a delay of five OSCCLK cycles (minimum) is needed before the wake-up signal could be asserted.
D. The external wake-up signal is driven active.
E. The wake-up signal fed to a GPIO pin to wake up the device must meet the minimum pulse width requirement. Furthermore, this signal must be free of glitches. If a noisy signal is fed to a GPIO pin, the wakeup behavior of the device will not be deterministic and the device may not exit low-power mode for subsequent wakeup pulses.
F. After a latency period, the STANDBY mode is exited.
G. Normal execution resumes. The device will respond to the interrupt (if enabled).

**图 5-18. STANDBY Entry and Exit Timing Diagram**


版权 © 2013–2020, Texas Instruments Incorporated

表 5-33 shows the HALT mode timing requirements, 表 5-34 shows the switching characteristics, and 图 5-19 shows the timing diagram for HALT mode.

### 表 5-33. HALT Mode Timing Requirements

| | | MIN | MAX | UNIT |
|---|---|---|---|---|
| $t_{w(WAKE\text{-}GPIO)}$ | Pulse duration, GPIO wake-up signal(1) | $t_{oscst} + 2t_{c(OSCCLK)}$ | | cycles |
| $t_{w(WAKE\text{-}XRS)}$ | Pulse duration, $\overline{XRS}$ wake-up signal(1) | $t_{oscst} + 8t_{c(OSCCLK)}$ | | cycles |

(1) For applications using X1/X2 for OSCCLK, the user must characterize their specific oscillator start-up time as it is dependent on circuit/layout external to the device. See 表 5-17 for more information. For applications using INTOSC1 or INTOSC2 for OSCCLK, see 节 5.9.3.5 for $t_{oscst}$. Oscillator start-up time does not apply to applications using a single-ended crystal on the X1 pin, as it is powered externally to the device.

### 表 5-34. HALT Mode Switching Characteristics

over recommended operating conditions (unless otherwise noted)

| PARAMETER | | MIN | MAX | UNIT |
|---|---|---|---|---|
| $t_{d(IDLE\text{-}XCOS)}$ | Delay time, IDLE instruction executed to XCLKOUT stop | | $16t_{c(INTOSC1)}$ | cycles |
| $t_{d(WAKE\text{-}HALT)}$ | Delay time, external wake signal end to CPU1 program execution resume | | | cycles |
| | • Wakeup from flash<br>– Flash module in active state | | $75t_{c(OSCCLK)}$ | |
| | • Wakeup from flash<br>– Flash module in sleep state | | $17500t_{c(OSCCLK)}$ (1) | |
| | • Wakeup from RAM | | $75t_{c(OSCCLK)}$ | |

(1) This value is based on the flash power-up time, which is a function of the SYSCLK frequency, flash wait states (RWAIT), and FPAC1[PSLEEP]. For more information, see the Flash and OTP Power-Down Modes and Wakeup section of the *TMS320F2837xD Dual-Core Microcontrollers Technical Reference Manual*. This value can be realized when SYSCLK is 200 MHz, RWAIT is 3, and FPAC1[PSLEEP] is 0x860.

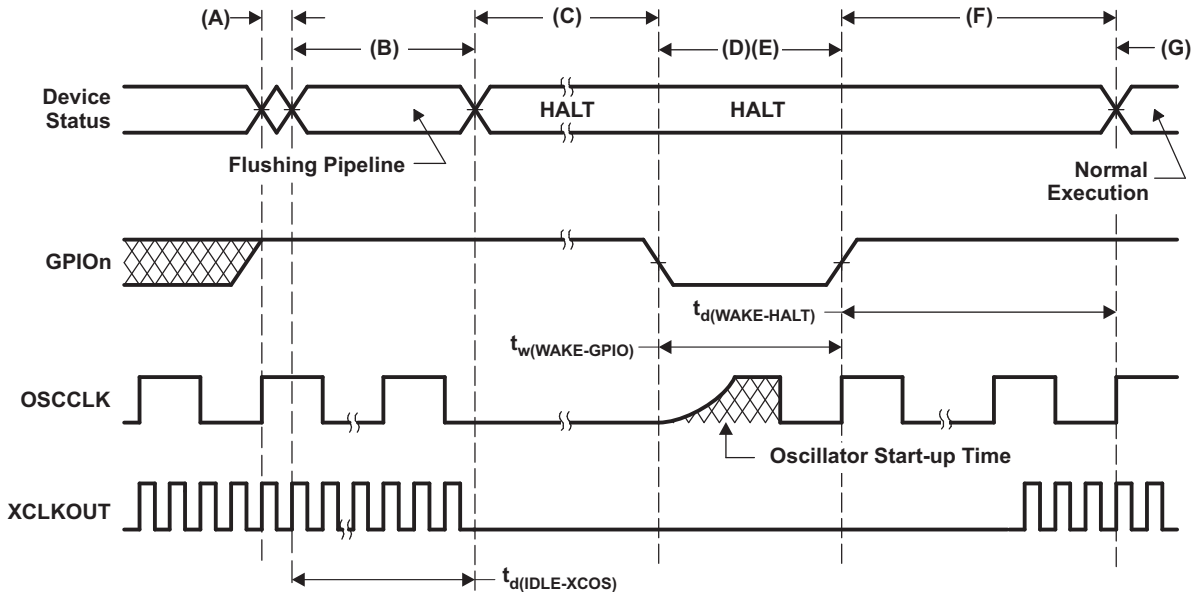


A. IDLE instruction is executed to put the device into HALT mode.
B. The LPM block responds to the HALT signal, SYSCLK is held for a maximum 16 INTOSC1 clock cycles before being turned off. This delay enables the CPU pipeline and any other pending operations to flush properly.
C. Clocks to the peripherals are turned off and the PLL is shut down. If a quartz crystal or ceramic resonator is used as the clock source, the internal oscillator is shut down as well. The device is now in HALT mode and consumes very little power. It is possible to keep the zero-pin internal oscillators (INTOSC1 and INTOSC2) and the watchdog alive in HALT MODE. This is done by writing a 1 to CLKSRCCTL1.WDHALTI. After the IDLE instruction is executed, a delay of five OSCCLK cycles (minimum) is needed before the wake-up signal could be asserted.
D. When the GPIOn pin (used to bring the device out of HALT) is driven low, the oscillator is turned on and the oscillator wakeup sequence is initiated. The GPIO pin should be driven high only after the oscillator has stabilized. This enables the provision of a clean clock signal during the PLL lock sequence. Because the falling edge of the GPIO pin asynchronously begins the wakeup procedure, care should be taken to maintain a low noise environment prior to entering and during HALT mode.
E. The wake-up signal fed to a GPIO pin to wake up the device must meet the minimum pulse width requirement. Furthermore, this signal must be free of glitches. If a noisy signal is fed to a GPIO pin, the wakeup behavior of the device will not be deterministic and the device may not exit low-power mode for subsequent wakeup pulses.
F. When CLKIN to the core is enabled, the device will respond to the interrupt (if enabled), after some latency. The HALT mode is now exited.
G. Normal operation resumes.
H. The user must relock the PLL upon HALT wakeup to ensure a stable PLL lock.

**图 5-19. HALT Entry and Exit Timing Diagram**

---

**注**

CPU2 should enter IDLE mode before CPU1 puts the device into HALT mode. CPU1 should verify that CPU2 has entered IDLE mode using the LPMSTAT register before calling the IDLE instruction to enter HALT.

---


版权 © 2013–2020, Texas Instruments Incorporated

表 5-35 shows the HIBERNATE mode timing requirements, 表 5-36 shows the switching characteristics, and 图 5-20 shows the timing diagram for HIBERNATE mode.

**表 5-35. HIBERNATE Mode Timing Requirements**

| | | MIN | MAX | UNIT |
|---|---|---|---|---|
| $t_{w(HIBWAKE)}$ | Pulse duration, $\overline{HIBWAKE}$ signal | 40 | | µs |
| $t_{w(WAKEXRS)}$ | Pulse duration, $\overline{XRS}$ wake-up signal | 40 | | µs |

**表 5-36. HIBERNATE Mode Switching Characteristics**

over recommended operating conditions (unless otherwise noted)

| PARAMETER | | MIN | MAX | UNIT |
|---|---|---|---|---|
| $t_{d(IDLE-XCOS)}$ | Delay time, IDLE instruction executed to XCLKOUT stop | | $30t_{c(SYSCLK)}$ | cycles |
| $t_{d(WAKE-HIB)}$ | Delay time, external wake signal to IORestore function start | | 1.5 | ms |

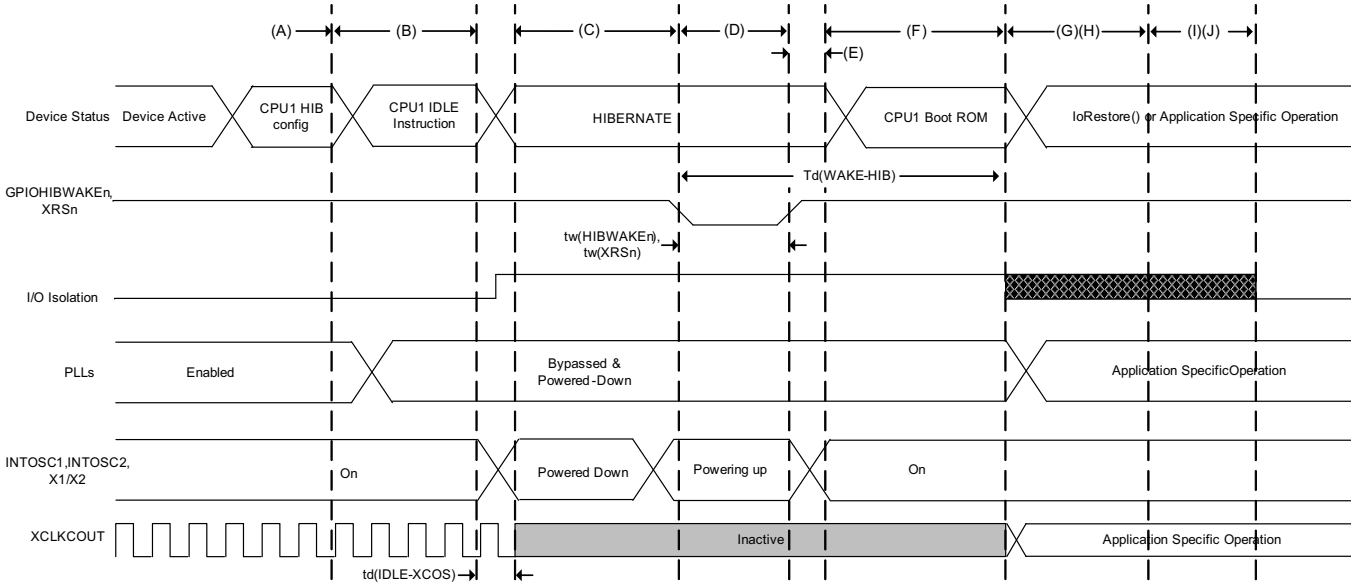


A. CPU1 does necessary application-specific context save to M0/M1 memories if required. This includes GPIO state if using I/O Isolation. Configures the LPMCR register of CPU1 for HIBERNATE mode. Powers down Flash Pump/Bank, USB-PHY, CMPSS, DAC, and ADC using their register configurations. The application should also power down the PLL and peripheral clocks before entering HIBERNATE. In dual-core applications, CPU1 should confirm that CPU2 has entered IDLE/STANDBY using the LPMSTAT register.

B. IDLE instruction is executed to put the device into HIBERNATE mode.

C. The device is now in HIBERNATE mode. If configured, I/O isolation is turned on, M0 and M1 memories are retained. CPU1 and CPU2 are powered down. Digital peripherals are powered down. The oscillators, PLLs, analog peripherals, and Flash are in their software-controlled Low-Power modes. Dx, LSx, and GSx memories are also powered down, and their memory contents lost.

D. A falling edge on the GPIOHIBWAKEn pin will drive the wakeup of the devices clock sources INTOSC1, INTOSC2, and X1/X2 OSC. The wakeup source must keep the GPIOHIBWAKEn pin low long enough to ensure full power-up of these clock sources.

E. After the clock sources are powered up, the GPIOHIBWAKEn must be driven high to trigger the wakeup sequence of the remainder of the device.

F. The BootROM will then begin to execute. The BootROM can distinguish a HIBERNATE wakeup by reading the CPU1.REC.HIBRESETn bit. After the TI OTP trims are loaded, the BootROM code will branch to the user-defined IoRestore function if it has been configured.

G. At this point, the device is out of HIBERNATE mode, and the application may continue.

H. The IoRestore function is a user-defined function where the application may reconfigure GPIO states, disable I/O isolation, reconfigure the PLL, restore peripheral configurations, or branch to application code. This is up to the application requirements.

I. If the application has not branched to application code, the BootROM will continue after completing IoRestore. It will disable I/O isolation automatically if it was not taken care of inside of IoRestore. CPU2 will be brought out of reset at this point as well.

J. BootROM will then boot as determined by the HIBBOOTMODE register. Refer to the ROM Code and Peripheral Booting chapter of the *TMS320F2837xD Dual-Core Microcontrollers Technical Reference Manual* for more information.

**图 5-20. HIBERNATE Entry and Exit Timing Diagram**

---

**注**

1. If the IORESTOREADDR is configured as the default value, the BootROM will continue its execution to boot as determined by the HIBBOOTMODE register. Refer to the ROM Code and Peripheral Booting chapter of the *TMS320F2837xD Dual-Core Microcontrollers Technical Reference Manual* for more information.
2. The user may choose to disable I/O Isolation at any point in the IoRestore function. Regardless if the user has disabled Isolation in the IoRestore function or if IoRestore is not defined, the BootROM will automatically disable isolation before booting as determined by the HIBBOOTMODE register.

---


版权 © 2013–2020, Texas Instruments Incorporated

**注**

For applications using both CPU1 and CPU2, TI recommends that the application puts CPU2 in either IDLE or STANDBY before entering HIBERNATE mode. If any GPIOs are used and the state is to be preserved, data can be stored in M0/M1 memory of CPU1 to be reconfigured upon wakeup. This should be done before step A of 图 5-20.

### 5.9.9 External Memory Interface (EMIF)

The EMIF provides a means of connecting the CPU to various external storage devices like asynchronous memories (SRAM, NOR flash) or synchronous memory (SDRAM).

#### 5.9.9.1 Asynchronous Memory Support

The EMIF supports asynchronous memories:

- SRAMs
- NOR Flash memories

There is an external wait input that allows slower asynchronous memories to extend the memory access. The EMIF module supports up to three chip selects ($\overline{\text{EMIF_CS}}$[4:2]). Each chip select has the following individually programmable attributes:

- Data bus width
- Read cycle timings: setup, hold, strobe
- Write cycle timings: setup, hold, strobe
- Bus turnaround time
- Extended wait option with programmable time-out
- Select strobe option

#### 5.9.9.2 Synchronous DRAM Support

The EMIF memory controller is compliant with the JESD21-C SDR SDRAMs that use a 32-bit or 16-bit data bus. The EMIF has a single SDRAM chip select ($\overline{\text{EMIF_CS}}$[0]).

The address space of the EMIF, for the synchronous memory (SDRAM), lies beyond the 22-bit range of the program address bus and can only be accessed through the data bus, which places a restriction on the C compiler being able to work effectively on data in this space. Therefore, when using SDRAM, the user is advised to copy data (using the DMA) from external memory to RAM before working on it. See the examples in C2000Ware (C2000Ware for C2000 MCUs) and the *TMS320F2837xD Dual-Core Microcontrollers Technical Reference Manual*.

SDRAM configurations supported are:

- One-bank, two-bank, and four-bank SDRAM devices
- Devices with 8-, 9-, 10-, and 11-column addresses
- CAS latency of two or three clock cycles
- 16-bit/32-bit data bus width
- 3.3-V LVCMOS interface

Additionally, the EMIF supports placing the SDRAM in self-refresh and power-down modes. Self-refresh mode allows the SDRAM to be put in a low-power state while still retaining memory contents because the SDRAM will continue to refresh itself even without clocks from the microcontroller. Power-down mode achieves even lower power, except the microcontroller must periodically wake up and issue refreshes if data retention is required. The EMIF module does not support mobile SDRAM devices.

On this device, the EMIF does not support burst access for SDRAM configurations. This means every access to an external SDRAM device will have CAS latency.


版权 © 2013–2020, Texas Instruments Incorporated

### 5.9.9.3 EMIF Electrical Data and Timing

#### *5.9.9.3.1 Asynchronous RAM*

Table 5-37 shows the EMIF asynchronous memory timing requirements. Table 5-38 shows the EMIF asynchronous memory switching characteristics. Figure 5-21 through Figure 5-24 show the EMIF asynchronous memory timing diagrams.

**Table 5-37. EMIF Asynchronous Memory Timing Requirements(1)**

| NO. | | | MIN | MAX | UNIT |
|---|---|---|---|---|---|
| **Reads and Writes** | | | | | |
| | E | EMIF clock period | $t_{c(SYSCLK)}$ | | ns |
| 2 | $t_{w(EM_WAIT)}$ | Pulse duration, EMxWAIT assertion and deassertion | 2E | | ns |
| **Reads** | | | | | |
| 12 | $t_{su(EMDV-EMOEH)}$ | Setup time, EMxD[y:0] valid before $\overline{EMxOE}$ high | 15 | | ns |
| 13 | $t_{h(EMOEH-EMDIV)}$ | Hold time, EMxD[y:0] valid after $\overline{EMxOE}$ high | 0 | | ns |
| 14 | $t_{su(EMOEL-EMWAIT)}$ | Setup Time, EMxWAIT asserted before end of Strobe Phase(2) | 4E+20 | | ns |
| **Writes** | | | | | |
| 28 | $t_{su(EMWEL-EMWAIT)}$ | Setup Time, EMxWAIT asserted before end of Strobe Phase(2) | 4E+20 | | ns |

(1) E = EMxCLK period in ns.
(2) Setup before end of STROBE phase (if no extended wait states are inserted) by which EMxWAIT must be asserted to add extended wait states. Figure 5-22 and Figure 5-24 describe EMIF transactions that include extended wait states inserted during the STROBE phase. However, cycles inserted as part of this extended wait period should not be counted; the 4E requirement is to the start of where the HOLD phase would begin if there were no extended wait cycles.

**Table 5-38. EMIF Asynchronous Memory Switching Characteristics(1)(2)(3)**

| NO. | PARAMETER | | MIN | MAX | UNIT |
|---|---|---|---|---|---|
| **Reads and Writes** | | | | | |
| 1 | $t_{d(TURNAROUND)}$ | Turn around time | (TA)*E–3 | (TA)*E+2 | ns |
| **Reads** | | | | | |
| 3 | $t_{c(EMRCYCLE)}$ | EMIF read cycle time (EW = 0) | (RS+RST+RH)*E–3 | (RS+RST+RH)*E+2 | ns |
| | | EMIF read cycle time (EW = 1) | (RS+RST+RH+ (EWC*16))*E–3 | (RS+RST+RH+ (EWC*16))*E+2 | ns |
| 4 | $t_{su(EMCEL-EMOEL)}$ | Output setup time, $\overline{EMxCS[y:2]}$ low to $\overline{EMxOE}$ low (SS = 0) | (RS)*E–3 | (RS)*E+2 | ns |
| | | Output setup time, $\overline{EMxCS[y:2]}$ low to $\overline{EMxOE}$ low (SS = 1) | –3 | 2 | ns |
| 5 | $t_{h(EMOEH-EMCEH)}$ | Output hold time, $\overline{EMxOE}$ high to $\overline{EMxCS[y:2]}$ high (SS = 0) | (RH)*E–3 | (RH)*E | ns |
| | | Output hold time, $\overline{EMxOE}$ high to $\overline{EMxCS[y:2]}$ high (SS = 1) | –3 | 0 | ns |
| 6 | $t_{su(EMBAV-EMOEL)}$ | Output setup time, EMxBA[y:0] valid to $\overline{EMxOE}$ low | (RS)*E–3 | (RS)*E+2 | ns |
| 7 | $t_{h(EMOEH-EMBAIV)}$ | Output hold time, $\overline{EMxOE}$ high to EMxBA[y:0] invalid | (RH)*E–3 | (RH)*E | ns |

(1) TA = Turn around, RS = Read setup, RST = Read strobe, RH = Read hold, WS = Write setup, WST = Write strobe, WH = Write hold, MEWC = Maximum external wait cycles. These parameters are programmed through the Asynchronous Bank and Asynchronous Wait Cycle Configuration Registers. These support the following ranges of values: TA[4–1], RS[16–1], RST[64–4], RH[8–1], WS[16–1], WST[64–1], WH[8–1], and MEWC[1–256]. See the *TMS320F2837xD Dual-Core Microcontrollers Technical Reference Manual* for more information.
(2) E = EMxCLK period in ns.
(3) EWC = external wait cycles determined by EMxWAIT input signal. EWC supports the following range of values. EWC[256–1]. The maximum wait time before time-out is specified by bit field MEWC in the Asynchronous Wait Cycle Configuration Register. See the *TMS320F2837xD Dual-Core Microcontrollers Technical Reference Manual* for more information.

Copyright © 2013–2020, Texas Instruments Incorporated

**Table 5-38. EMIF Asynchronous Memory Switching Characteristics[(1)(2)(3)] (continued)**

| NO. | PARAMETER | | MIN | MAX | UNIT |
|---|---|---|---|---|---|
| 8 | $t_{su(EMAV-EMOEL)}$ | Output setup time, EMxA[y:0] valid to $\overline{EMxOE}$ low | (RS)*E–3 | (RS)*E+2 | ns |
| 9 | $t_{h(EMOEH-EMAIV)}$ | Output hold time, $\overline{EMxOE}$ high to EMxA[y:0] invalid | (RH)*E–3 | (RH)*E | ns |
| 10 | $t_{w(EMOEL)}$ | $\overline{EMxOE}$ active low width (EW = 0) | (RST)*E–1 | (RST)*E+1 | ns |
| | | $\overline{EMxOE}$ active low width (EW = 1) | (RST+(EWC*16))*E–1 | (RST+(EWC*16))*E+1 | ns |
| 11 | $t_{d(EMWAITH-EMOEH)}$ | Delay time from EMxWAIT deasserted to $\overline{EMxOE}$ high | 4E+10 | 5E+15 | ns |
| 29 | $t_{su(EMDQMV-EMOEL)}$ | Output setup time, EMxDQM[y:0] valid to $\overline{EMxOE}$ low | (RS)*E–3 | (RS)*E+2 | ns |
| 30 | $t_{h(EMOEH-EMDQMIV)}$ | Output hold time, $\overline{EMxOE}$ high to EMxDQM[y:0] invalid | (RH)*E–3 | (RH)*E | ns |
| **Writes** | | | | | |
| 15 | $t_{c(EMWCYCLE)}$ | EMIF write cycle time (EW = 0) | (WS+WST+WH)*E–3 | (WS+WST+WH)*E+1 | ns |
| | | EMIF write cycle time (EW = 1) | (WS+WST+WH+ (EWC*16))*E–3 | (WS+WST+WH+ (EWC*16))*E+1 | ns |
| 16 | $t_{su(EMCEL-EMWEL)}$ | Output setup time, $\overline{EMxCS[y:2]}$ low to $\overline{EMxWE}$ low (SS = 0) | (WS)*E–3 | (WS)*E+1 | ns |
| | | Output setup time, $\overline{EMxCS[y:2]}$ low to $\overline{EMxWE}$ low (SS = 1) | –3 | 1 | ns |
| 17 | $t_{h(EMWEH-EMCEH)}$ | Output hold time, $\overline{EMxWE}$ high to $\overline{EMxCS[y:2]}$ high (SS = 0) | (WH)*E–3 | (WH)*E | ns |
| | | Output hold time, $\overline{EMxWE}$ high to $\overline{EMxCS[y:2]}$ high (SS = 1) | –3 | 0 | ns |
| 18 | $t_{su(EMDQMV-EMWEL)}$ | Output setup time, EMxDQM[y:0] valid to $\overline{EMxWE}$ low | (WS)*E–3 | (WS)*E+1 | ns |
| 19 | $t_{h(EMWEH-EMDQMIV)}$ | Output hold time, $\overline{EMxWE}$ high to EMxDQM[y:0] invalid | (WH)*E–3 | (WH)*E | ns |
| 20 | $t_{su(EMBAV-EMWEL)}$ | Output setup time, EMxBA[y:0] valid to $\overline{EMxWE}$ low | (WS)*E–3 | (WS)*E+1 | ns |
| 21 | $t_{h(EMWEH-EMBAIV)}$ | Output hold time, $\overline{EMxWE}$ high to EMxBA[y:0] invalid | (WH)*E–3 | (WH)*E | ns |
| 22 | $t_{su(EMAV-EMWEL)}$ | Output setup time, EMxA[y:0] valid to $\overline{EMxWE}$ low | (WS)*E–3 | (WS)*E+1 | ns |
| 23 | $t_{h(EMWEH-EMAIV)}$ | Output hold time, $\overline{EMxWE}$ high to EMxA[y:0] invalid | (WH)*E–3 | (WH)*E | ns |
| 24 | $t_{w(EMWEL)}$ | $\overline{EMxWE}$ active low width (EW = 0) | (WST)*E–1 | (WST)*E+1 | ns |
| | | $\overline{EMxWE}$ active low width (EW = 1) | (WST+(EWC*16))*E–1 | (WST+(EWC*16))*E+1 | ns |
| 25 | $t_{d(EMWAITH-EMWEH)}$ | Delay time from EMxWAIT deasserted to $\overline{EMxWE}$ high | 4E+10 | 5E+15 | ns |
| 26 | $t_{su(EMDV-EMWEL)}$ | Output setup time, EMxD[y:0] valid to $\overline{EMxWE}$ low | (WS)*E–3 | (WS)*E+1 | ns |
| 27 | $t_{h(EMWEH-EMDIV)}$ | Output hold time, $\overline{EMxWE}$ high to EMxD[y:0] invalid | (WH)*E–3 | (WH)*E | ns |


Copyright © 2013–2020, Texas Instruments Incorporated

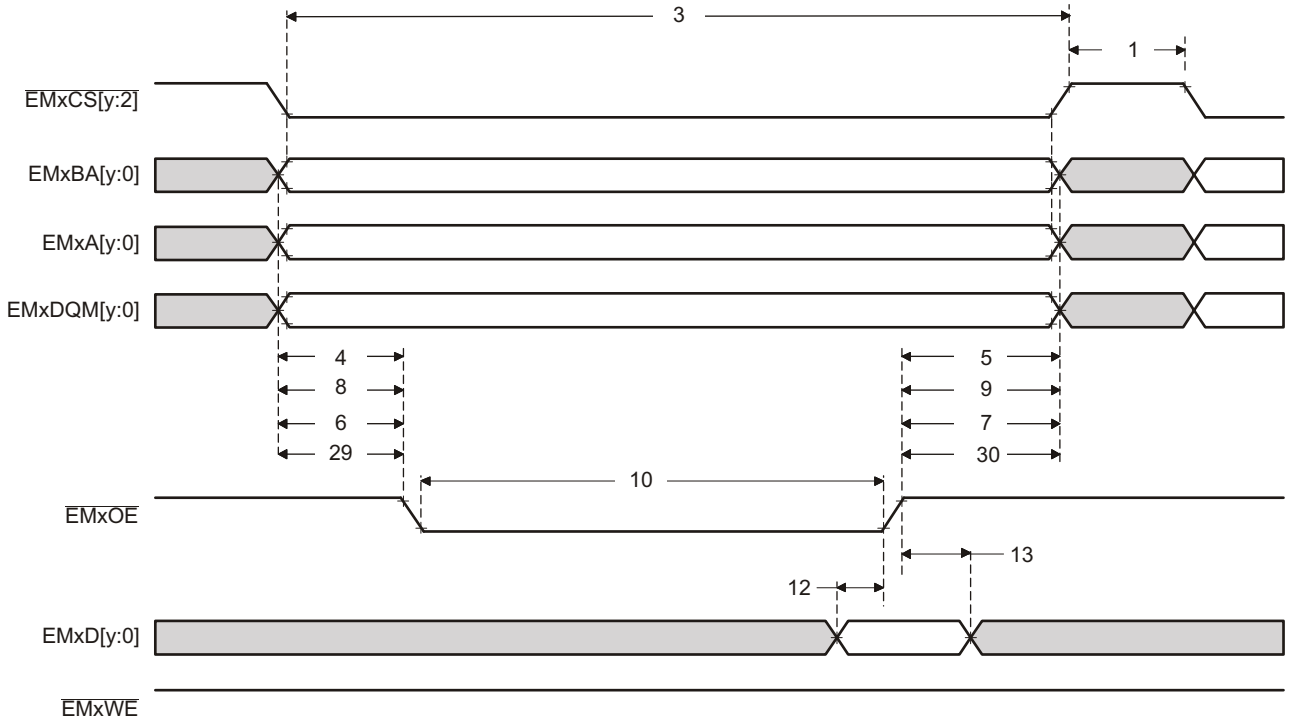


**Figure 5-21. Asynchronous Memory Read Timing**

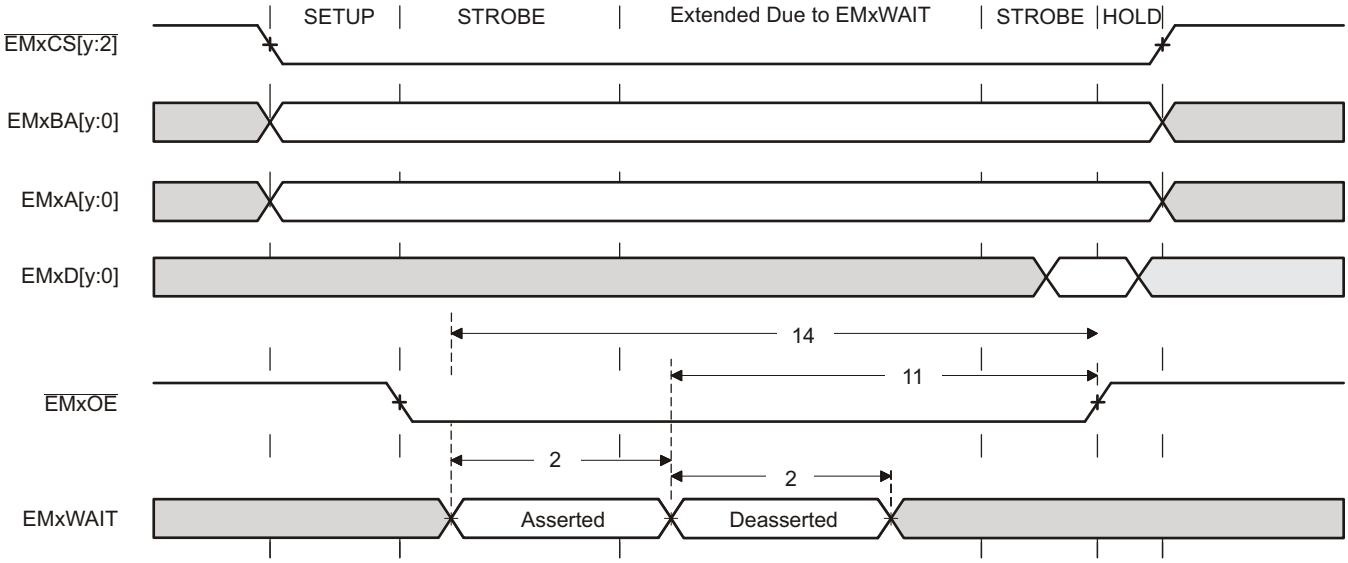


**Figure 5-22. EMxWAIT Read Timing Requirements**

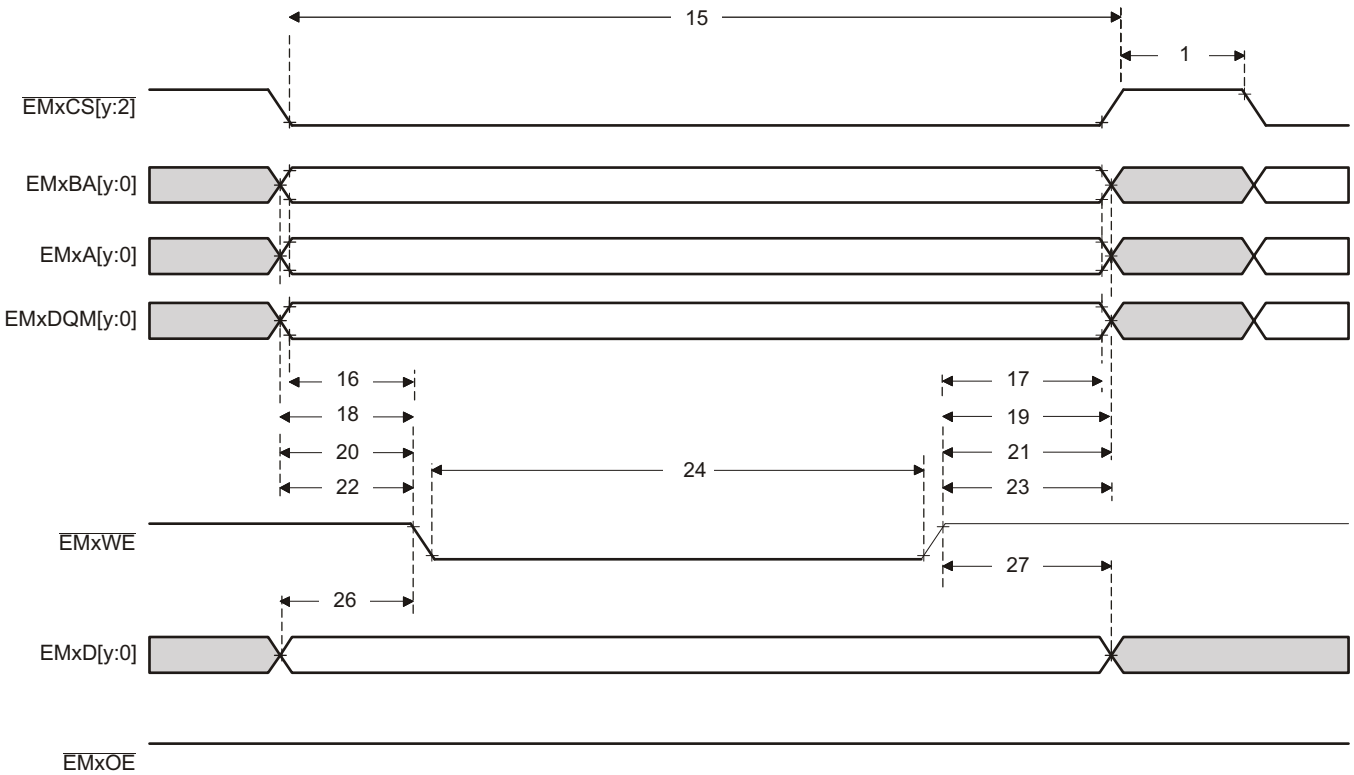


**Figure 5-23. Asynchronous Memory Write Timing**

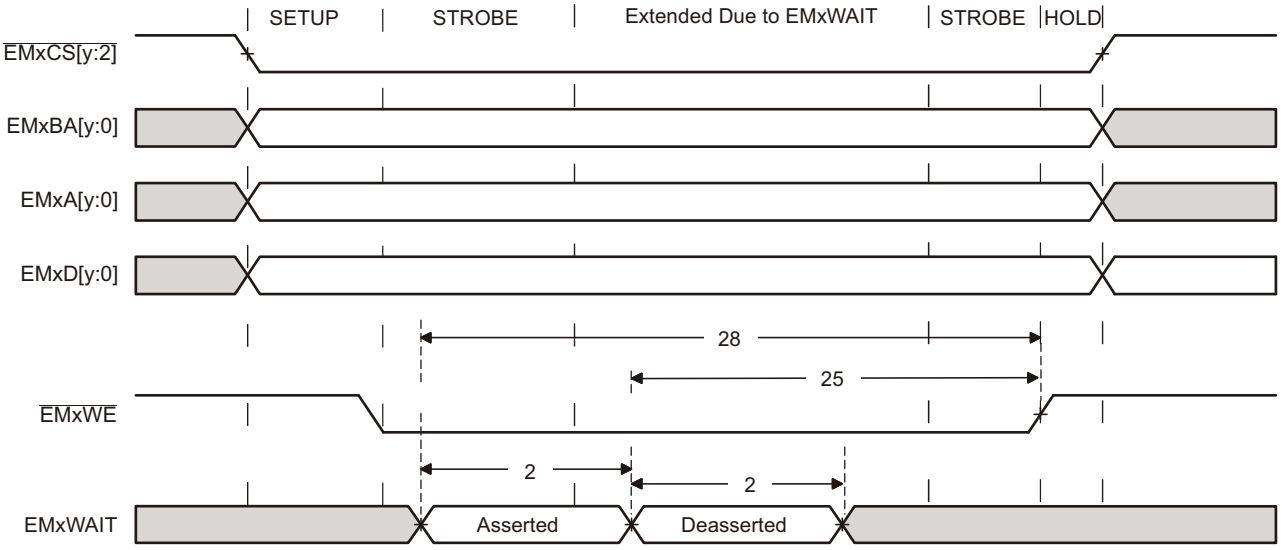


**Figure 5-24. EMxWAIT Write Timing Requirements**


Copyright © 2013–2020, Texas Instruments Incorporated

#### 5.9.9.3.2 Synchronous RAM

Table 5-39 shows the EMIF synchronous memory timing requirements. Table 5-40 shows the EMIF synchronous memory switching characteristics. Figure 5-25 and Figure 5-26 show the synchronous memory timing diagrams.

**Table 5-39. EMIF Synchronous Memory Timing Requirements**

| NO. | | | MIN | MAX | UNIT |
|---|---|---|---|---|---|
| 19 | $t_{su(EMIFDV-EM_CLKH)}$ | Input setup time, read data valid on EMxD[y:0] before EMxCLK rising | 2 | | ns |
| 20 | $t_{h(CLKH-DIV)}$ | Input hold time, read data valid on EMxD[y:0] after EMxCLK rising | 1.5 | | ns |

**Table 5-40. EMIF Synchronous Memory Switching Characteristics**

| NO. | PARAMETER | | MIN | MAX | UNIT |
|---|---|---|---|---|---|
| 1 | $t_{c(CLK)}$ | Cycle time, EMIF clock EMxCLK | 10 | | ns |
| 2 | $t_{w(CLK)}$ | Pulse width, EMIF clock EMxCLK high or low | 3 | | ns |
| 3 | $t_{d(CLKH-CSV)}$ | Delay time, EMxCLK rising to $\overline{\text{EMxCS[y:2]}}$ valid | | 8 | ns |
| 4 | $t_{oh(CLKH-CSIV)}$ | Output hold time, EMxCLK rising to $\overline{\text{EMxCS[y:2]}}$ invalid | 1 | | ns |
| 5 | $t_{d(CLKH-DQMV)}$ | Delay time, EMxCLK rising to EMxDQM[y:0] valid | | 8 | ns |
| 6 | $t_{oh(CLKH-DQMIV)}$ | Output hold time, EMxCLK rising to EMxDQM[y:0] invalid | 1 | | ns |
| 7 | $t_{d(CLKH-AV)}$ | Delay time, EMxCLK rising to EMxA[y:0] and EMxBA[y:0] valid | | 8 | ns |
| 8 | $t_{oh(CLKH-AIV)}$ | Output hold time, EMxCLK rising to EMxA[y:0] and EMxBA[y:0] invalid | 1 | | ns |
| 9 | $t_{d(CLKH-DV)}$ | Delay time, EMxCLK rising to EMxD[y:0] valid | | 8 | ns |
| 10 | $t_{oh(CLKH-DIV)}$ | Output hold time, EMxCLK rising to EMxD[y:0] invalid | 1 | | ns |
| 11 | $t_{d(CLKH-RASV)}$ | Delay time, EMxCLK rising to EMxRAS valid | | 8 | ns |
| 12 | $t_{oh(CLKH-RASIV)}$ | Output hold time, EMxCLK rising to EMxRAS invalid | 1 | | ns |
| 13 | $t_{d(CLKH-CASV)}$ | Delay time, EMxCLK rising to EMxCAS valid | | 8 | ns |
| 14 | $t_{oh(CLKH-CASIV)}$ | Output hold time, EMxCLK rising to EMxCAS invalid | 1 | | ns |
| 15 | $t_{d(CLKH-WEV)}$ | Delay time, EMxCLK rising to $\overline{\text{EMxWE}}$ valid | | 8 | ns |
| 16 | $t_{oh(CLKH-WEIV)}$ | Output hold time, EMxCLK rising to $\overline{\text{EMxWE}}$ invalid | 1 | | ns |
| 17 | $t_{d(CLKH-DHZ)}$ | Delay time, EMxCLK rising to EMxD[y:0] tri-stated | | 8 | ns |
| 18 | $t_{oh(CLKH-DLZ)}$ | Output hold time, EMxCLK rising to EMxD[y:0] driving | 1 | | ns |

Copyright © 2013–2020, Texas Instruments Incorporated

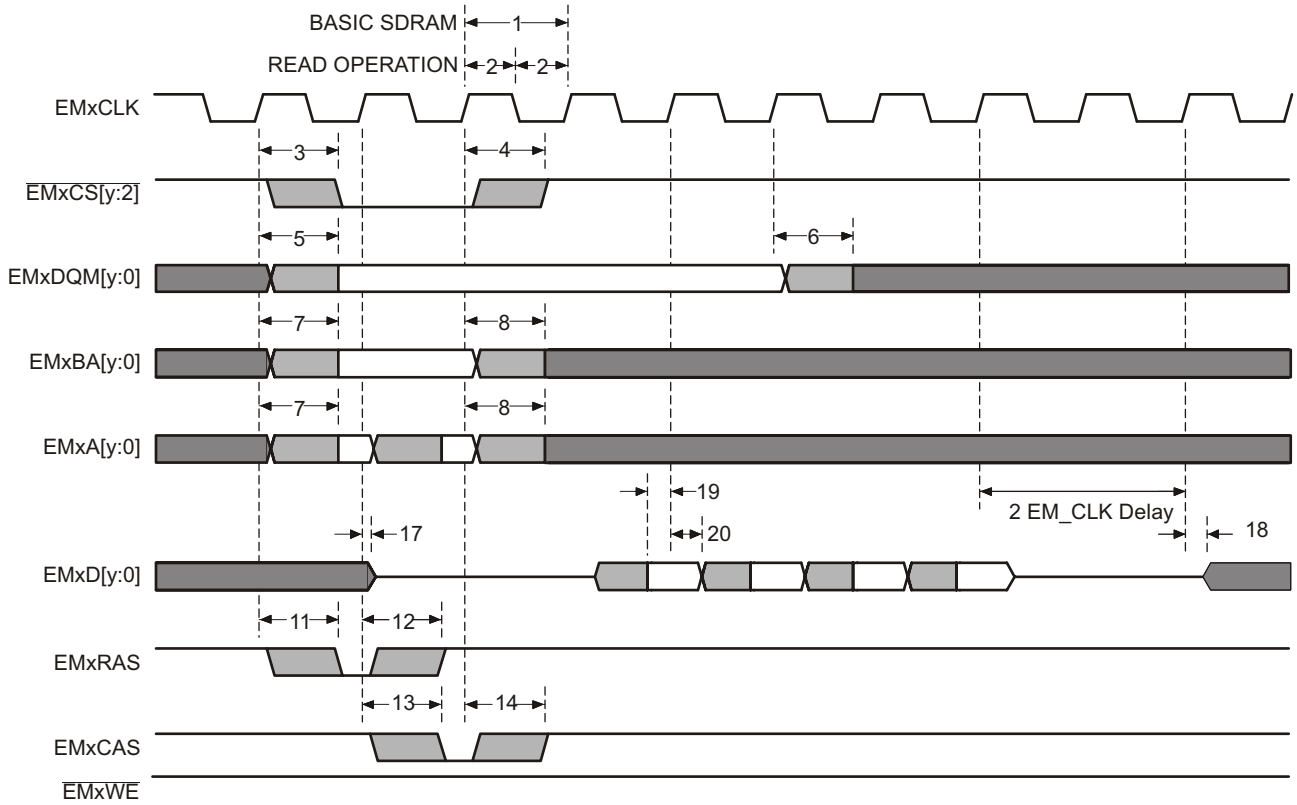


**Figure 5-25. Basic SDRAM Read Operation**


版权 © 2013–2020, Texas Instruments Incorporated

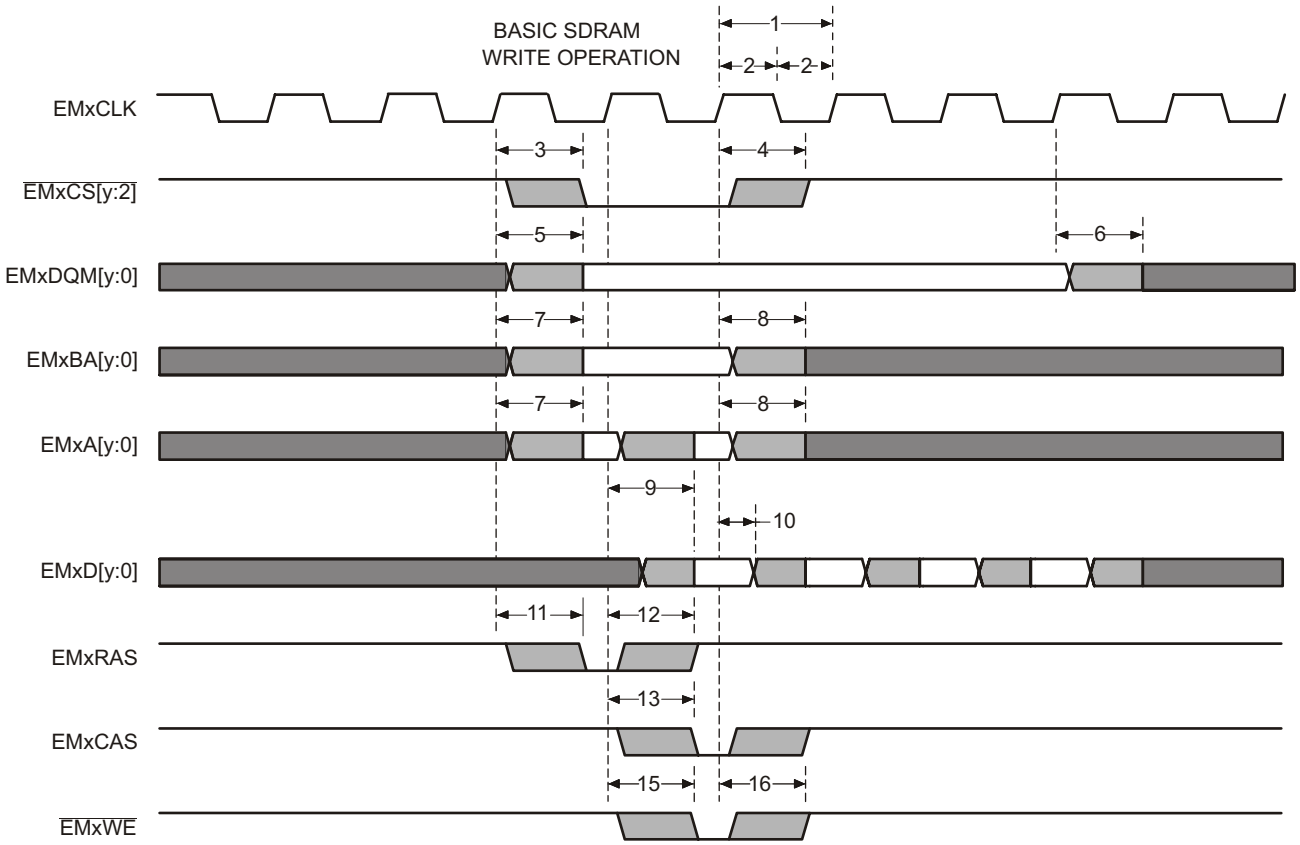


**Figure 5-26. Basic SDRAM Write Operation**

## 5.10 Analog Peripherals

The analog subsystem module is described in this section.

The analog modules on this device include the ADC, temperature sensor, buffered DAC, and CMPSS.

The analog subsystem has the following features:

- Flexible voltage references
  - The ADCs are referenced to $V_{REFHIx}$ and $V_{REFLOx}$ pins.
    - $V_{REFHIx}$ pin voltage must be driven in externally.
- The buffered DACs are referenced to $V_{REFHIx}$ and $V_{SSA}$.
  - Alternately, these DACs can be referenced to the VDAC pin and $V_{SSA}$.
- The comparator DACs are referenced to $V_{DDA}$ and $V_{SSA}$.
  - Alternately, these DACs can be referenced to the VDAC pin and $V_{SSA}$.
- Flexible pin usage
  - Buffered DAC and comparator subsystem functions multiplexed with ADC inputs
- Internal connection to $V_{REFLO}$ on all ADCs for offset self-calibration

图 5-27 shows the Analog Subsystem Block Diagram for the 337-ball ZWT package. 图 5-28 shows the Analog Subsystem Block Diagram for the 176-pin PTP package. 图 5-29 shows the Analog Subsystem Block Diagram for the 100-pin PZP package.


版权 © 2013–2020, Texas Instruments Incorporated

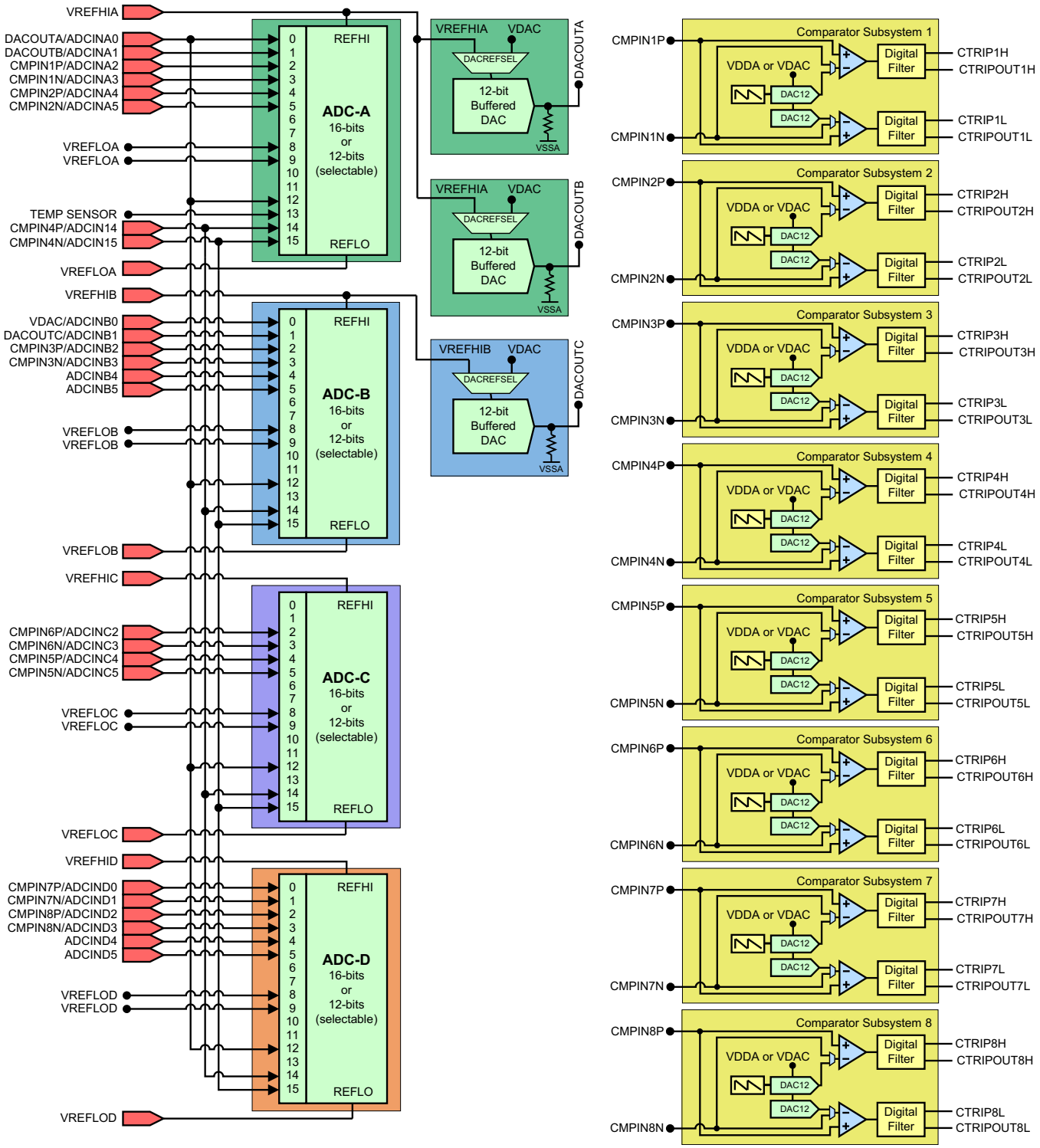


**图 5-27. Analog Subsystem Block Diagram (337-Ball ZWT)**

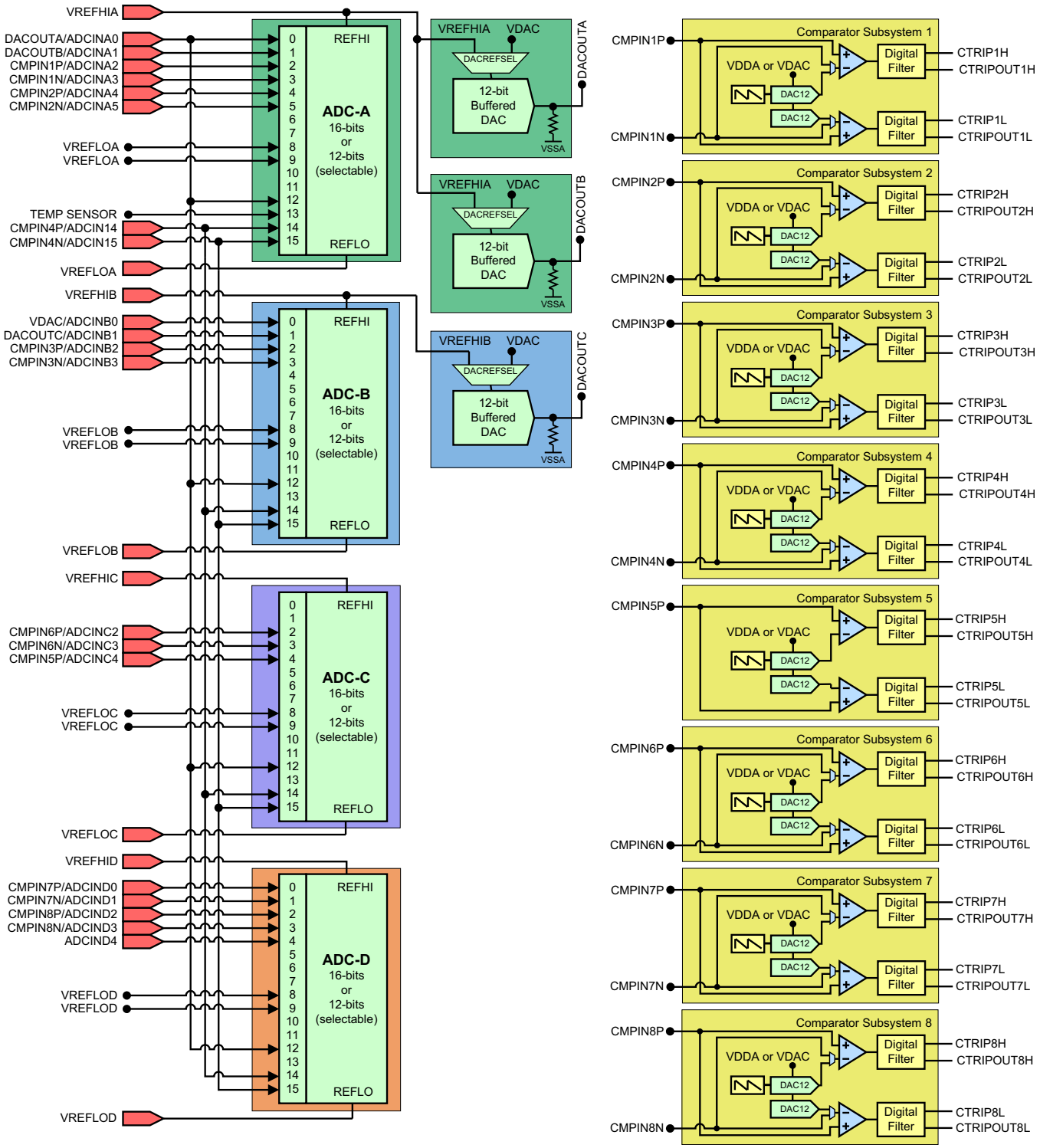


**图 5-28. Analog Subsystem Block Diagram (176-Pin PTP)**


版权 © 2013–2020, Texas Instruments Incorporated

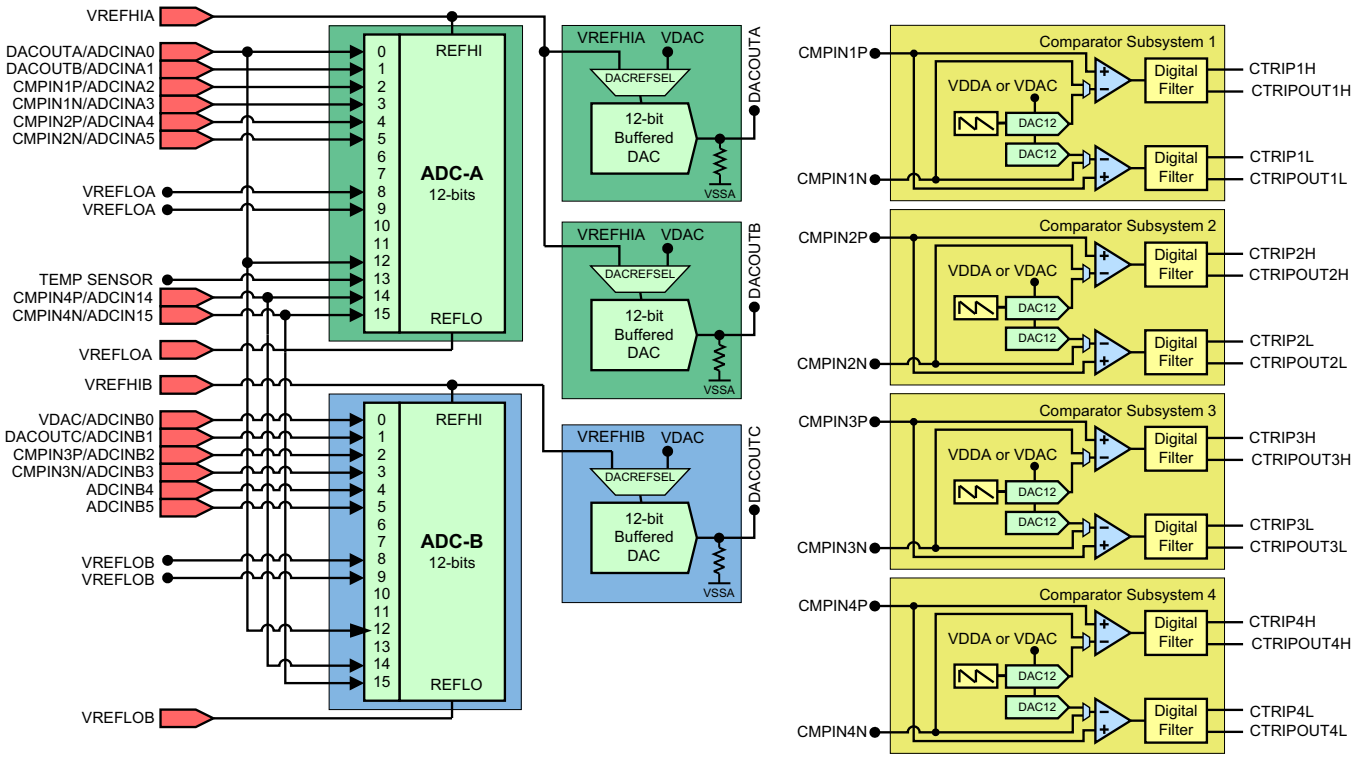


**图 5-29. Analog Subsystem Block Diagram (100-Pin PZP)**

### 5.10.1 Analog-to-Digital Converter (ADC)

The ADCs on this device are successive approximation (SAR) style ADCs with selectable resolution of either 16 bits or 12 bits. There are multiple ADC modules which allow simultaneous sampling. The ADC wrapper is start-of-conversion (SOC) based [see the SOC Principle of Operation section of the *TMS320F2837xD Dual-Core Microcontrollers Technical Reference Manual*.

Each ADC has the following features:

- Selectable resolution of 16 bits or 12 bits
- Ratiometric external reference set by $V_{REFHI}$ and $V_{REFLO}$
- Differential signal conversions (16-bit mode only)
- Single-ended signal conversions (12-bit mode only)
- Input multiplexer with up to 16 channels (single-ended) or 8 channels (differential)
- 16 configurable SOCs
- 16 individually addressable result registers
- Multiple trigger sources
  - Software immediate start
  - All ePWMs
  - GPIO XINT2
  - CPU timers
  - ADCINT1 or 2
- Four flexible PIE interrupts
- Burst mode
- Four post-processing blocks, each with:
  - Saturating offset calibration
  - Error from setpoint calculation
  - High, low, and zero-crossing compare, with interrupt and ePWM trip capability
  - Trigger-to-sample delay capture


版权 © 2013–2020, Texas Instruments Incorporated

图 5-30 shows the ADC module block diagram.

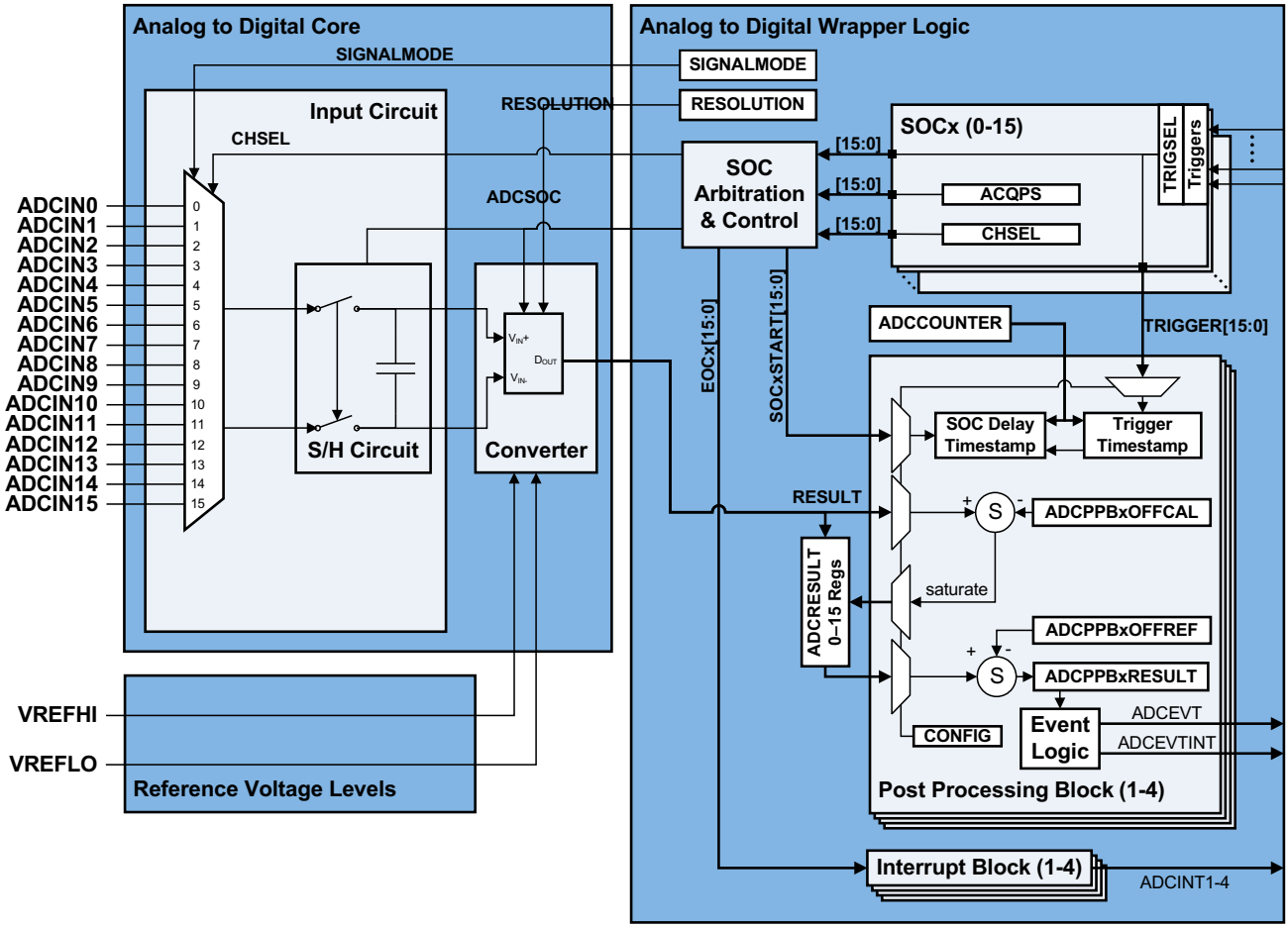


**图 5-30. ADC Module Block Diagram**

### 5.10.1.1 ADC Configurability

Some ADC configurations are individually controlled by the SOCs, while others are controlled by each ADC module. 表 5-41 summarizes the basic ADC options and their level of configurability.

**表 5-41. ADC Options and Configuration Levels**

| OPTIONS | CONFIGURABILITY |
|---|---|
| Clock | By the module(1) |
| Resolution | By the module(1) |
| Signal mode | By the module |
| Reference voltage source | Not configurable (external reference only) |
| Trigger source | By the SOC(1) |
| Converted channel | By the SOC |
| Acquisition window duration | By the SOC(1) |
| EOC location | By the module |
| Burst mode | By the module(1) |

(1) Writing these values differently to different ADC modules could cause the ADCs to operate asynchronously. For guidance on when the ADCs are operating synchronously or asynchronously, see the Ensuring Synchronous Operation section of the Analog-to-Digital Converter (ADC) chapter in the *TMS320F2837xD Dual-Core Microcontrollers Technical Reference Manual*.

#### 5.10.1.1.1 Signal Mode

The ADC supports two signal modes: single-ended and differential. In single-ended mode, the input voltage to the converter is sampled through a single pin (ADCINx), referenced to VREFLO. In differential signaling mode, the input voltage to the converter is sampled through a pair of input pins, one of which is the positive input (ADCINxP) and the other is the negative input (ADCINxN). The actual input voltage is the difference between the two (ADCINxP – ADCINxN). 图 5-31 shows the differential signaling mode. 图 5-32 shows the single-ended signaling mode.

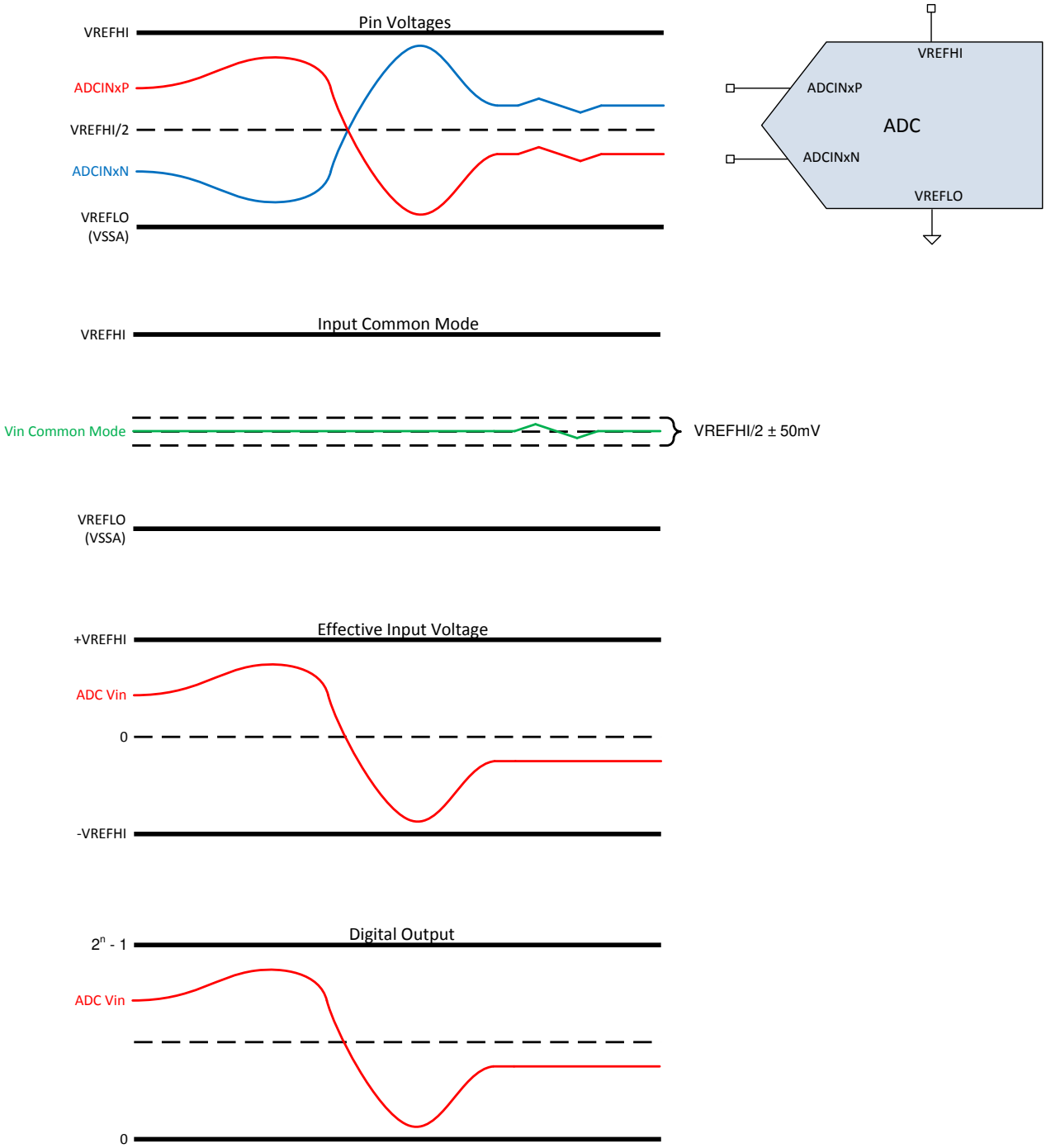


**图 5-31. Differential Signaling Mode**


版权 © 2013–2020, Texas Instruments Incorporated

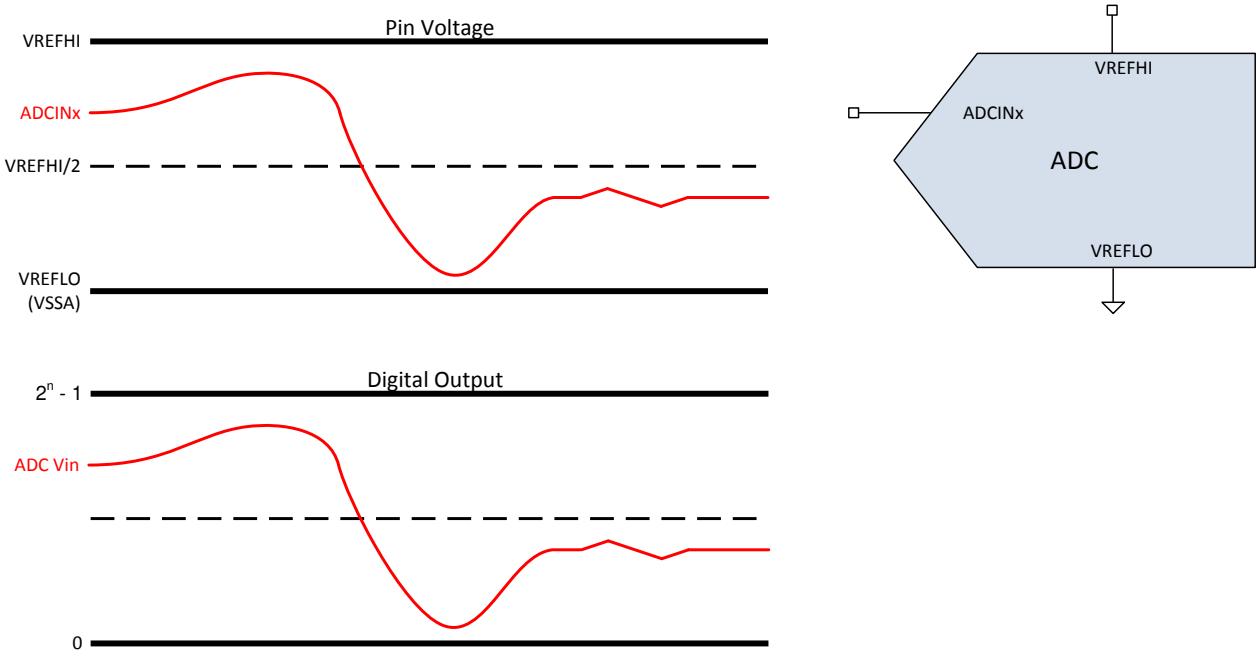


**图 5-32. Single-ended Signaling Mode**

#### 5.10.1.2 ADC Electrical Data and Timing

Table 5-42 shows the ADC operating conditions for 16-bit differential mode. Table 5-43 shows the ADC characteristics for 16-bit differential mode. Table 5-44 shows the ADC operating conditions for 12-bit single-ended mode. Table 5-45 shows the ADC characteristics for 12-bit single-ended mode. Table 5-46 shows the ADCEXTSOC timing requirements.

**Table 5-42. ADC Operating Conditions (16-Bit Differential Mode)**

over recommended operating conditions (unless otherwise noted)

| | MIN | TYP | MAX | UNIT |
|---|---|---|---|---|
| ADCCLK (derived from PERx.SYSCLK) | 5 | | 50 | MHz |
| Sample window duration (set by ACQPS and PERx.SYSCLK)(1) | 320 | | | ns |
| $V_{REFHI}$ | 2.4 | 2.5 or 3.0 | $V_{DDA}$ | V |
| $V_{REFLO}$ | $V_{SSA}$ | 0 | $V_{SSA}$ | V |
| $V_{REFHI} – V_{REFLO}$ | 2.4 | | $V_{DDA}$ | V |
| ADC input conversion range | $V_{REFLO}$ | | $V_{REFHI}$ | V |
| ADC input signal common mode voltage(2)(3) | $V_{REFCM}$ – 50 | $V_{REFCM}$ | $V_{REFCM}$ + 50 | mV |

(1) The sample window must also be at least as long as 1 ADCCLK cycle for correct ADC operation.
(2) $V_{REFCM} = (V_{REFHI} + V_{REFLO})/2$
(3) The $V_{REFCM}$ requirements will not be met if the negative ADC input pin is connected to $V_{SSA}$ or $V_{REFLO}$.

**NOTE**

The ADC inputs should be kept below $V_{DDA}$ + 0.3 V during operation. If an ADC input exceeds this level, the $V_{REF}$ internal to the device may be disturbed, which can impact results for other ADC or DAC inputs using the same $V_{REF}$.

**NOTE**

The $V_{REFHI}$ pin must be kept below $V_{DDA}$ + 0.3 V to ensure proper functional operation. If the $V_{REFHI}$ pin exceeds this level, a blocking circuit may activate, and the internal value of $V_{REFHI}$ may float to 0 V internally, giving improper ADC conversion or DAC output.


Copyright © 2013–2020, Texas Instruments Incorporated

### Table 5-43. ADC Characteristics (16-Bit Differential Mode)

over recommended operating conditions (unless otherwise noted)(1)

| PARAMETER | TEST CONDITIONS | MIN | TYP | MAX | UNIT |
|---|---|---|---|---|---|
| ADC conversion cycles(2) | | 29.6 | | 31 | ADCCLKs |
| Power-up time (after setting ADCPWDNZ to first conversion) | | | | 500 | µs |
| Gain error | | –64 | ±9 | 64 | LSBs |
| Offset error(3) | | –16 | ±9 | 16 | LSBs |
| Channel-to-channel gain error | | | ±6 | | LSBs |
| Channel-to-channel offset error | | | ±3 | | LSBs |
| ADC-to-ADC gain error | Identical $V_{REFHI}$ and $V_{REFLO}$ for all ADCs | | ±6 | | LSBs |
| ADC-to-ADC offset error | Identical $V_{REFHI}$ and $V_{REFLO}$ for all ADCs | | ±3 | | LSBs |
| DNL(4) | | > –1 | ±0.5 | 1 | LSBs |
| INL | | –3 | ±1.5 | 3 | LSBs |
| SNR(5)(6) | $V_{REFHI}$ = 2.5 V, $f_{in}$ = 10 kHz | | 87.6 | | dB |
| THD(5)(6) | $V_{REFHI}$ = 2.5 V, $f_{in}$ = 10 kHz | | –93.5 | | dB |
| SFDR(5)(6) | $V_{REFHI}$ = 2.5 V, $f_{in}$ = 10 kHz | | 95.4 | | dB |
| SINAD(5)(6) | $V_{REFHI}$ = 2.5 V, $f_{in}$ = 10 kHz | | 86.6 | | dB |
| ENOB(5)(6) | $V_{REFHI}$ = 2.5 V, $f_{in}$ = 10 kHz, single ADC(7) | | 14.1 | | bits |
| | $V_{REFHI}$ = 2.5 V, $f_{in}$ = 10 kHz, synchronous ADCs(8) | | 14.1 | | |
| | $V_{REFHI}$ = 2.5 V, $f_{in}$ = 10 kHz, asynchronous ADCs(9) | | Not supported | | |
| PSRR | $V_{DDA}$ = 3.3-V DC + 200 mV DC up to Sine at 1 kHz | | 77 | | dB |
| PSRR | $V_{DDA}$ = 3.3-V DC + 200 mV Sine at 800 kHz | | 74 | | dB |
| CMRR | DC to 1 MHz | | 60 | | dB |
| $V_{REFHI}$ input current | | | 190 | | µA |
| ADC-to-ADC isolation(6)(10)(11) | $V_{REFHI}$ = 2.5 V, synchronous ADCs(8) | –2 | | 2 | LSBs |
| | $V_{REFHI}$ = 2.5 V, asynchronous ADCs(9) | | Not supported | | |

(1) Typical values are measured with $V_{REFHI}$ = 2.5 V and $V_{REFLO}$ = 0 V. Minimum and Maximum values are tested or characterized with $V_{REFHI}$ = 2.5 V and $V_{REFLO}$ = 0 V.
(2) See 节 5.10.1.2.2.
(3) Difference from conversion result 32768 when ADCINp = ADCINn = $V_{REFCM}$.
(4) No missing codes.
(5) AC parameters will be impacted by clock source accuracy and jitter, this should be taken into account when selecting the clock source for the system. The clock source used for these parameters was a high-accuracy external clock fed through the PLL. The on-chip Internal Oscillator has higher jitter than an external crystal and these parameters will degrade if it is used as a clock source.
(6) I/O activity is minimized on pins adjacent to ADC input and $V_{REFHI}$ pins as part of best practices to reduce capacitive coupling and crosstalk.
(7) One ADC operating while all other ADCs are idle.
(8) All ADCs operating with identical ADCCLK, S+H durations, triggers, and resolution.
(9) Any ADCs operating with heterogeneous ADCCLK, S+H durations, triggers, or resolution.
(10) Maximum DC code deviation due to operation of multiple ADCs simultaneously.
(11) Value based on characterization.

### Table 5-44. ADC Operating Conditions (12-Bit Single-Ended Mode)

over recommended operating conditions (unless otherwise noted)

| | MIN | TYP | MAX | UNIT |
|---|---|---|---|---|
| ADCCLK (derived from PERx.SYSCLK) | 5 | | 50 | MHz |
| Sample window duration (set by ACQPS and PERx.SYSCLK)(1) | 75 | | | ns |
| $V_{REFHI}$ | 2.4 | 2.5 or 3.0 | $V_{DDA}$ | V |
| $V_{REFLO}$ | $V_{SSA}$ | 0 | $V_{SSA}$ | V |
| $V_{REFHI} – V_{REFLO}$ | 2.4 | | $V_{DDA}$ | V |
| ADC input conversion range | $V_{REFLO}$ | | $V_{REFHI}$ | V |

(1) The sample window must also be at least as long as 1 ADCCLK cycle for correct ADC operation.

**NOTE**

The ADC inputs should be kept below $V_{DDA}$ + 0.3 V during operation. If an ADC input exceeds this level, the $V_{REF}$ internal to the device may be disturbed, which can impact results for other ADC or DAC inputs using the same $V_{REF}$.

**NOTE**

The $V_{REFHI}$ pin must be kept below $V_{DDA}$ + 0.3 V to ensure proper functional operation. If the $V_{REFHI}$ pin exceeds this level, a blocking circuit may activate, and the internal value of $V_{REFHI}$ may float to 0 V internally, giving improper ADC conversion or DAC output.


Copyright © 2013–2020, Texas Instruments Incorporated

### Table 5-45. ADC Characteristics (12-Bit Single-Ended Mode)

over recommended operating conditions (unless otherwise noted)(1)

| PARAMETER | TEST CONDITIONS | MIN | TYP | MAX | UNIT |
|---|---|---|---|---|---|
| ADC conversion cycles(2) | | 10.1 | | 11 | ADCCLKs |
| Power-up time | | | | 500 | µs |
| Gain error | | –5 | ±3 | 5 | LSBs |
| Offset error | | –4 | ±2 | 4 | LSBs |
| Channel-to-channel gain error | | | ±4 | | LSBs |
| Channel-to-channel offset error | | | ±2 | | LSBs |
| ADC-to-ADC gain error | Identical $V_{REFHI}$ and $V_{REFLO}$ for all ADCs | | ±4 | | LSBs |
| ADC-to-ADC offset error | Identical $V_{REFHI}$ and $V_{REFLO}$ for all ADCs | | ±2 | | LSBs |
| DNL(3) | | > –1 | ±0.5 | 1 | LSBs |
| INL | | –2 | ±1.0 | 2 | LSBs |
| SNR(4)(5) | $V_{REFHI}$ = 2.5 V, $f_{in}$ = 100 kHz | | 68.8 | | dB |
| THD(4)(5) | $V_{REFHI}$ = 2.5 V, $f_{in}$ = 100 kHz | | –78.4 | | dB |
| SFDR(4)(5) | $V_{REFHI}$ = 2.5 V, $f_{in}$ = 100 kHz | | 79.2 | | dB |
| SINAD(4)(5) | $V_{REFHI}$ = 2.5 V, $f_{in}$ = 100 kHz | | 68.4 | | dB |
| ENOB(4)(5) | $V_{REFHI}$ = 2.5 V, $f_{in}$ = 100 kHz, single ADC(6), all packages | | 11.1 | | bits |
| | $V_{REFHI}$ = 2.5 V, $f_{in}$ = 100 kHz, synchronous ADCs(7), all packages | | 11.1 | | |
| | $V_{REFHI}$ = 2.5 V, $f_{in}$ = 100 kHz, asynchronous ADCs(8), 100-pin PZP package | | Not supported | | |
| | $V_{REFHI}$ = 2.5 V, $f_{in}$ = 100 kHz, asynchronous ADCs(8), 176-pin PTP package | | 9.7 | | |
| | $V_{REFHI}$ = 2.5 V, $f_{in}$ = 100 kHz, asynchronous ADCs(8), 337-ball ZWT package | | 10.9 | | |
| PSRR | $V_{DDA}$ = 3.3-V DC + 200 mV DC up to Sine at 1 kHz | | 60 | | dB |
| PSRR | $V_{DDA}$ = 3.3-V DC + 200 mV Sine at 800 kHz | | 57 | | dB |
| ADC-to-ADC isolation(5)(9)(10) | $V_{REFHI}$ = 2.5 V, synchronous ADCs(7), all packages | –1 | | 1 | LSBs |
| | $V_{REFHI}$ = 2.5 V, asynchronous ADCs(8), 100-pin PZP package | | Not supported | | |
| | $V_{REFHI}$ = 2.5 V, asynchronous ADCs(8), 176-pin PTP package | –9 | | 9 | |
| | $V_{REFHI}$ = 2.5 V, asynchronous ADCs(8), 337-ball ZWT package | –2 | | 2 | |
| $V_{REFHI}$ input current | | | 130 | | µA |

(1) Typical values are measured with $V_{REFHI}$ = 2.5 V and $V_{REFLO}$ = 0 V. Minimum and Maximum values are tested or characterized with $V_{REFHI}$ = 2.5 V and $V_{REFLO}$ = 0 V.
(2) See 节 5.10.1.2.2.
(3) No missing codes.
(4) AC parameters will be impacted by clock source accuracy and jitter, this should be taken into account when selecting the clock source for the system. The clock source used for these parameters was a high-accuracy external clock fed through the PLL. The on-chip Internal Oscillator has higher jitter than an external crystal and these parameters will degrade if it is used as a clock source.
(5) I/O activity is minimized on pins adjacent to ADC input and $V_{REFHI}$ pins as part of best practices to reduce capacitive coupling and crosstalk.
(6) One ADC operating while all other ADCs are idle.
(7) All ADCs operating with identical ADCCLK, S+H durations, triggers, and resolution.
(8) Any ADCs operating with heterogeneous ADCCLK, S+H durations, triggers, or resolution.
(9) Maximum DC code deviation due to operation of multiple ADCs simultaneously.
(10) Value based on characterization.

**Table 5-46. ADCEXTSOC Timing Requirements(1)**

| | | | MIN | MAX | UNIT |
|---|---|---|---|---|---|
| $t_{w(INT)}$ | Pulse duration, INT input low/high | Synchronous | $2t_{c(SYSCLK)}$ | | cycles |
| | | With qualifier | $t_{w(IQSW)} + t_{w(SP)} + 1t_{c(SYSCLK)}$ | | cycles |

(1) For an explanation of the input qualifier parameters, see Table 5-24.

#### *5.10.1.2.1 ADC Input Models*

**注**

ADC channels ADCINA0, ADCINA1, and ADCINB1 have a 50-kΩ pulldown resistor to $V_{SSA}$.

For differential operation, the ADC input characteristics are given by 表 5-47 and 图 5-33.

**表 5-47. Differential Input Model Parameters**

| | DESCRIPTION | VALUE (16-BIT MODE) |
|---|---|---|
| $C_p$ | Parasitic input capacitance | See 表 5-49 |
| $R_{on}$ | Sampling switch resistance | 700 Ω |
| $C_h$ | Sampling capacitor | 16.5 pF |
| $R_s$ | Nominal source impedance | 50 Ω |

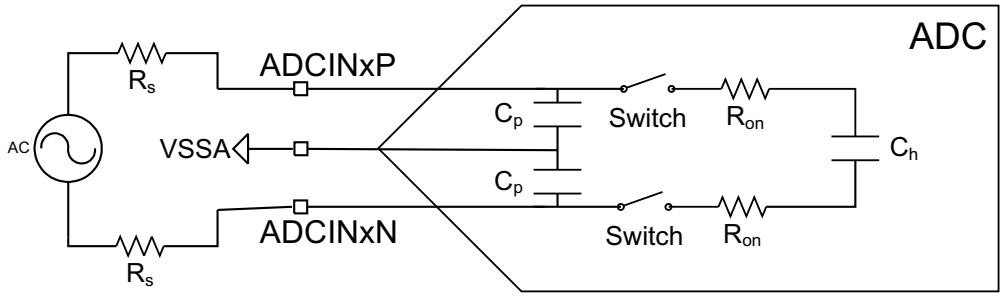


**图 5-33. Differential Input Model**

For single-ended operation, the ADC input characteristics are given by 表 5-48 and 图 5-34.

**表 5-48. Single-Ended Input Model Parameters**

| | DESCRIPTION | VALUE (12-BIT MODE) |
|---|---|---|
| $C_p$ | Parasitic input capacitance | See 表 5-49 |
| $R_{on}$ | Sampling switch resistance | 425 Ω |
| $C_h$ | Sampling capacitor | 14.5 pF |
| $R_s$ | Nominal source impedance | 50 Ω |

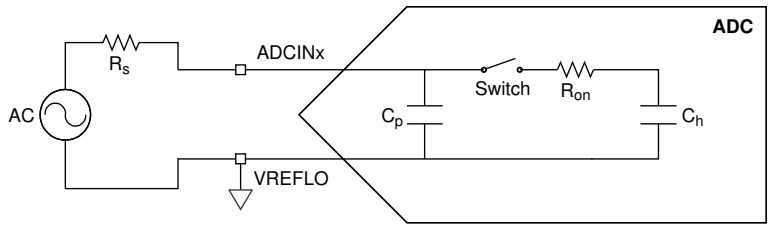


**图 5-34. Single-Ended Input Model**


版权 © 2013–2020, Texas Instruments Incorporated

表 5-49 shows the parasitic capacitance on each channel. Also, enabling a comparator adds approximately 1.4 pF of capacitance on positive comparator inputs and 2.5 pF of capacitance on negative comparator inputs.

**表 5-49. Per-Channel Parasitic Capacitance**

| ADC CHANNEL | $C_p$ (pF) | |
|---|---|---|
| | COMPARATOR DISABLED | COMPARATOR ENABLED |
| ADCINA0 | 12.9 | N/A |
| ADCINA1 | 10.3 | N/A |
| ADCINA2 | 5.9 | 7.3 |
| ADCINA3 | 6.3 | 8.8 |
| ADCINA4 | 5.9 | 7.3 |
| ADCINA5 | 6.3 | 8.8 |
| ADCINB0(1) | 117.0 | N/A |
| ADCINB1 | 10.6 | N/A |
| ADCINB2 | 5.9 | 7.3 |
| ADCINB3 | 6.2 | 8.7 |
| ADCINB4 | 5.2 | N/A |
| ADCINB5 | 5.1 | N/A |
| ADCINC2 | 5.5 | 6.9 |
| ADCINC3 | 5.8 | 8.3 |
| ADCINC4 | 5.0 | 6.4 |
| ADCINC5 | 5.3 | 7.8 |
| ADCIND0 | 5.3 | 6.7 |
| ADCIND1 | 5.7 | 8.2 |
| ADCIND2 | 5.3 | 6.7 |
| ADCIND3 | 5.6 | 8.1 |
| ADCIND4 | 4.3 | N/A |
| ADCIND5 | 4.3 | N/A |
| ADCIN14 | 8.6 | 10.0 |
| ADCIN15 | 9.0 | 11.5 |

(1) The increased capacitance is due to VDAC functionality.

These input models should be used along with actual signal source impedance to determine the acquisition window duration. See the Choosing an Acquisition Window Duration section of the *TMS320F2837xD Dual-Core Microcontrollers Technical Reference Manual* for more information.

The user should analyze the ADC input setting assuming worst-case initial conditions on $C_h$. This will require assuming that $C_h$ could start the S+H window completely charged to $V_{REFHI}$ or completely discharged to $V_{REFLO}$. When the ADC transitions from an odd-numbered channel to an even-numbered channel, or vice-versa, the actual initial voltage on $C_h$ will be close to being completely discharged to $V_{REFLO}$. For even-to-even or odd-to-odd channel transitions, the initial voltage on $C_h$ will be close to the voltage of the previously converted channel.

#### 5.10.1.2.2 ADC Timing Diagrams

表 5-51 lists the ADC timings in 12-bit mode (SYSCLK cycles). 表 5-52 lists the ADC timings in 16-bit mode. 图 5-35 and 图 5-36 show the ADC conversion timings for two SOCs given the following assumptions:

- SOC0 and SOC1 are configured to use the same trigger.
- No other SOCs are converting or pending when the trigger occurs.
- The round robin pointer is in a state that causes SOC0 to convert first.
- ADCINTSEL is configured to set an ADCINT flag upon end of conversion for SOC0 (whether this flag propagates through to the CPU to cause an interrupt is determined by the configurations in the PIE module).

表 5-50 lists the descriptions of the ADC timing parameters that are in 图 5-35 and 图 5-36.

**表 5-50. ADC Timing Parameters**

| PARAMETER | DESCRIPTION |
|---|---|
| $t_{SH}$ | The duration of the S+H window.<br><br>At the end of this window, the value on the S+H capacitor becomes the voltage to be converted into a digital value. The duration is given by (ACQPS + 1) SYSCLK cycles. ACQPS can be configured individually for each SOC, so $t_{SH}$ will not necessarily be the same for different SOCs.<br><br>**Note:** The value on the S+H capacitor will be captured approximately 5 ns before the end of the S+H window regardless of device clock settings. |
| $t_{LAT}$ | The time from the end of the S+H window until the ADC conversion results latch in the ADCRESULTx register.<br><br>If the ADCRESULTx register is read before this time, the previous conversion results will be returned. |
| $t_{EOC}$ | The time from the end of the S+H window until the next ADC conversion S+H window can begin. The subsequent sample can start before the conversion results are latched. |
| $t_{INT}$ | The time from the end of the S+H window until an ADCINT flag is set (if configured).<br><br>If the INTPULSEPOS bit in the ADCCTL1 register is set, $t_{INT}$ will coincide with the conversion results being latched into the result register.<br><br>If the INTPULSEPOS bit is 0, $t_{INT}$ will coincide with the end of the S+H window. If $t_{INT}$ triggers a read of the ADC result register (directly through DMA or indirectly by triggering an ISR that reads the result), care must be taken to ensure the read occurs after the results latch (otherwise, the previous results will be read). |


版权 © 2013–2020, Texas Instruments Incorporated

### 表 5-51. ADC Timings in 12-Bit Mode (SYSCLK Cycles)

| ADCCLK PRESCALE | | SYSCLK CYCLES | | | | ADCCLK CYCLES |
|---|---|---|---|---|---|---|
| ADCCTL2 [PRESCALE] | RATIO ADCCLK:SYSCLK | $t_{EOC}$ | $t_{LAT}$ (1) | $t_{INT(EARLY)}$ | $t_{INT(LATE)}$ | $t_{EOC}$ |
| 0 | 1 | 11 | 13 | 1 | 11 | 11.0 |
| 1 | 1.5 | Invalid | | | | |
| 2 | 2 | 21 | 23 | 1 | 21 | 10.5 |
| 3 | 2.5 | 26 | 28 | 1 | 26 | 10.4 |
| 4 | 3 | 31 | 34 | 1 | 31 | 10.3 |
| 5 | 3.5 | 36 | 39 | 1 | 36 | 10.3 |
| 6 | 4 | 41 | 44 | 1 | 41 | 10.3 |
| 7 | 4.5 | 46 | 49 | 1 | 46 | 10.2 |
| 8 | 5 | 51 | 55 | 1 | 51 | 10.2 |
| 9 | 5.5 | 56 | 60 | 1 | 56 | 10.2 |
| 10 | 6 | 61 | 65 | 1 | 61 | 10.2 |
| 11 | 6.5 | 66 | 70 | 1 | 66 | 10.2 |
| 12 | 7 | 71 | 76 | 1 | 71 | 10.1 |
| 13 | 7.5 | 76 | 81 | 1 | 76 | 10.1 |
| 14 | 8 | 81 | 86 | 1 | 81 | 10.1 |
| 15 | 8.5 | 86 | 91 | 1 | 86 | 10.1 |

(1) Refer to the "ADC: DMA Read of Stale Result" advisory in the *TMS320F2837xD Dual-Core MCUs Silicon Errata*.

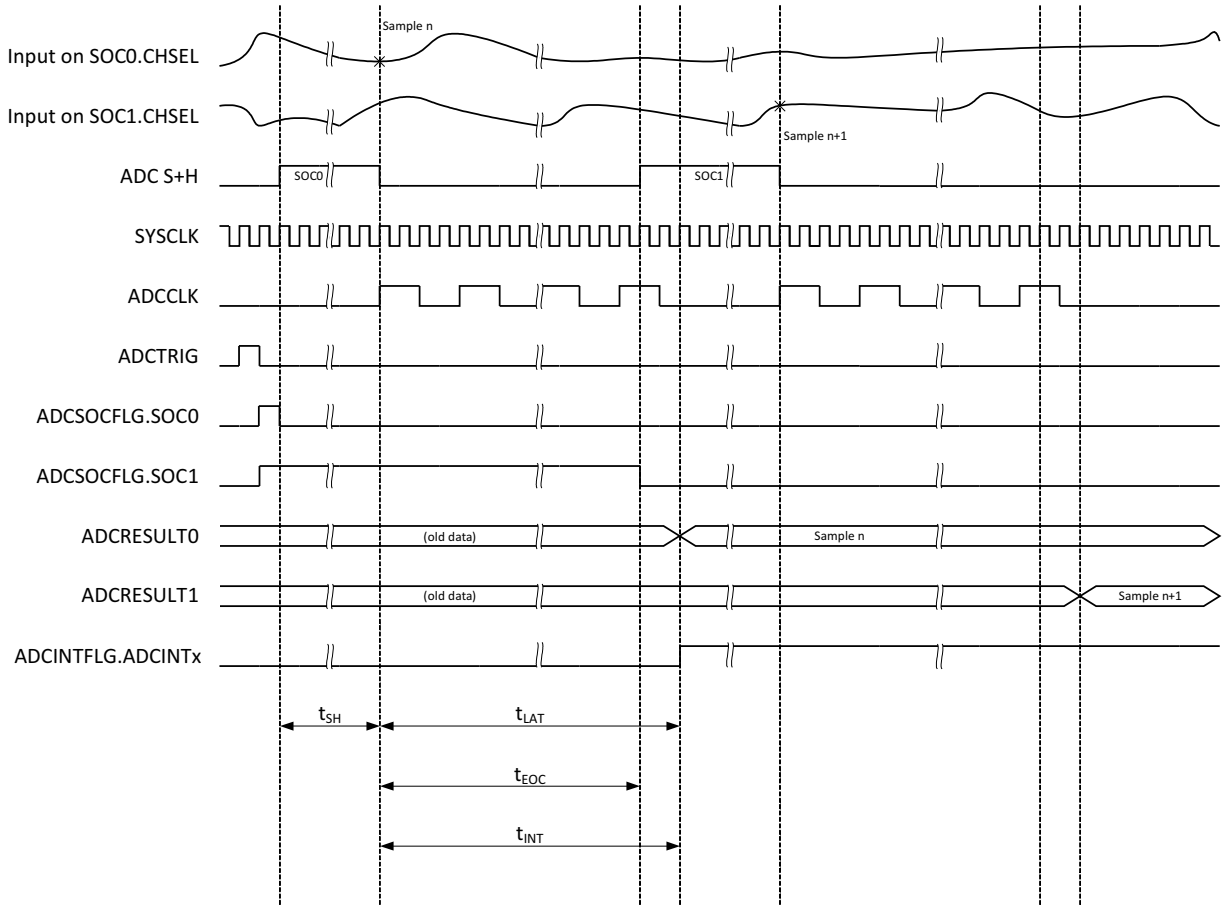


**图 5-35. ADC Timings for 12-Bit Mode**


版权 © 2013–2020, Texas Instruments Incorporated

### 表 5-52. ADC Timings in 16-Bit Mode

| ADCCLK PRESCALE | | SYSCLK CYCLES | | | | ADCCLK CYCLES |
|---|---|---|---|---|---|---|
| ADCCTL2 [PRESCALE] | RATIO ADCCLK:SYSCLK | $t_{EOC}$ | $t_{LAT}$ (1) | $t_{INT(EARLY)}$ | $t_{INT(LATE)}$ | $t_{EOC}$ |
| 0 | 1 | 31 | 32 | 1 | 31 | 31.0 |
| 1 | 1.5 | Invalid | | | | |
| 2 | 2 | 60 | 61 | 1 | 60 | 30.0 |
| 3 | 2.5 | 75 | 75 | 1 | 75 | 30.0 |
| 4 | 3 | 90 | 91 | 1 | 90 | 30.0 |
| 5 | 3.5 | 104 | 106 | 1 | 104 | 29.7 |
| 6 | 4 | 119 | 120 | 1 | 119 | 29.8 |
| 7 | 4.5 | 134 | 134 | 1 | 134 | 29.8 |
| 8 | 5 | 149 | 150 | 1 | 149 | 29.8 |
| 9 | 5.5 | 163 | 165 | 1 | 163 | 29.6 |
| 10 | 6 | 178 | 179 | 1 | 178 | 29.7 |
| 11 | 6.5 | 193 | 193 | 1 | 193 | 29.7 |
| 12 | 7 | 208 | 209 | 1 | 208 | 29.7 |
| 13 | 7.5 | 222 | 224 | 1 | 222 | 29.6 |
| 14 | 8 | 237 | 238 | 1 | 237 | 29.6 |
| 15 | 8.5 | 252 | 252 | 1 | 252 | 29.6 |

(1) Refer to the "ADC: DMA Read of Stale Result" advisory in the *TMS320F2837xD Dual-Core MCUs Silicon Errata*.

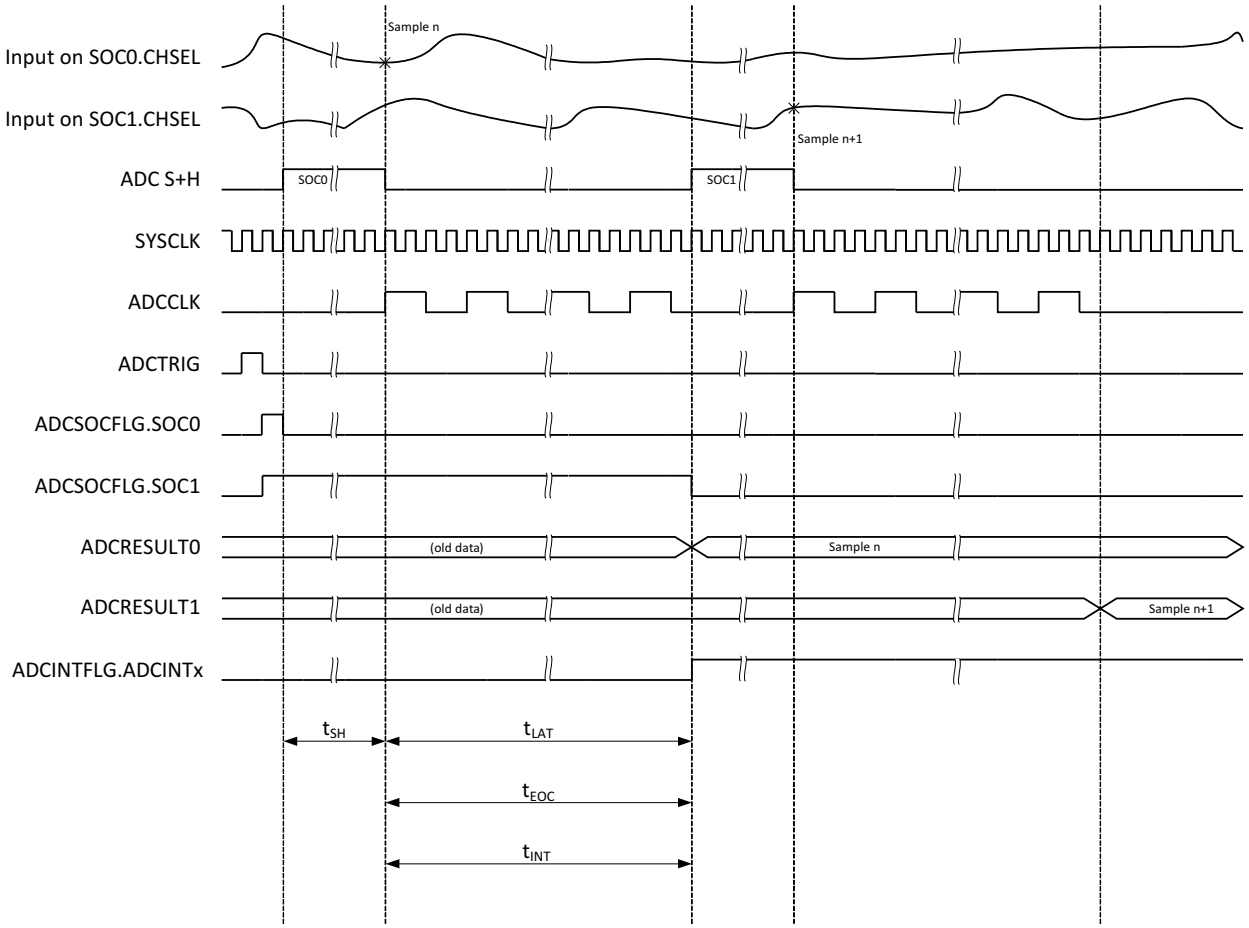


**图 5-36. ADC Timings for 16-Bit Mode**


版权 © 2013–2020, Texas Instruments Incorporated

#### 5.10.1.3 Temperature Sensor Electrical Data and Timing

The temperature sensor can be used to measure the device junction temperature. The temperature sensor is sampled through an internal connection to the ADC and translated into a temperature through TI-provided software. When sampling the temperature sensor, the ADC must meet the acquisition time in Table 5-53.

**Table 5-53. Temperature Sensor Electrical Characteristics**

over recommended operating conditions (unless otherwise noted)

| PARAMETER | MIN | TYP | MAX | UNIT |
|---|---|---|---|---|
| Temperature accuracy | | ±15 | | °C |
| Start-up time (TSNSCTL[ENABLE] to sampling temperature sensor) | | 500 | | µs |
| ADC acquisition time | 700 | | | ns |

### 5.10.2 Comparator Subsystem (CMPSS)

Each CMPSS module includes two comparators, two internal voltage reference DACs (CMPSS DACs), two digital glitch filters, and one ramp generator. There are two inputs, CMPINxP and CMPINxN. Each of these inputs will be internally connected to an ADCIN pin. The CMPINxP pin is always connected to the positive input of the CMPSS comparators. CMPINxN can be used instead of the DAC output to drive the negative comparator inputs. There are two comparators, and therefore two outputs from the CMPSS module, which are connected to the input of a digital filter module before being passed on to the Comparator TRIP crossbar and either PWM modules or directly to a GPIO pin. 图 5-37 shows the CMPSS connectivity on the 337-ball ZWT and 176-pin PTP packages. 图 5-38 shows CMPSS connectivity on the 100-pin PZP package.

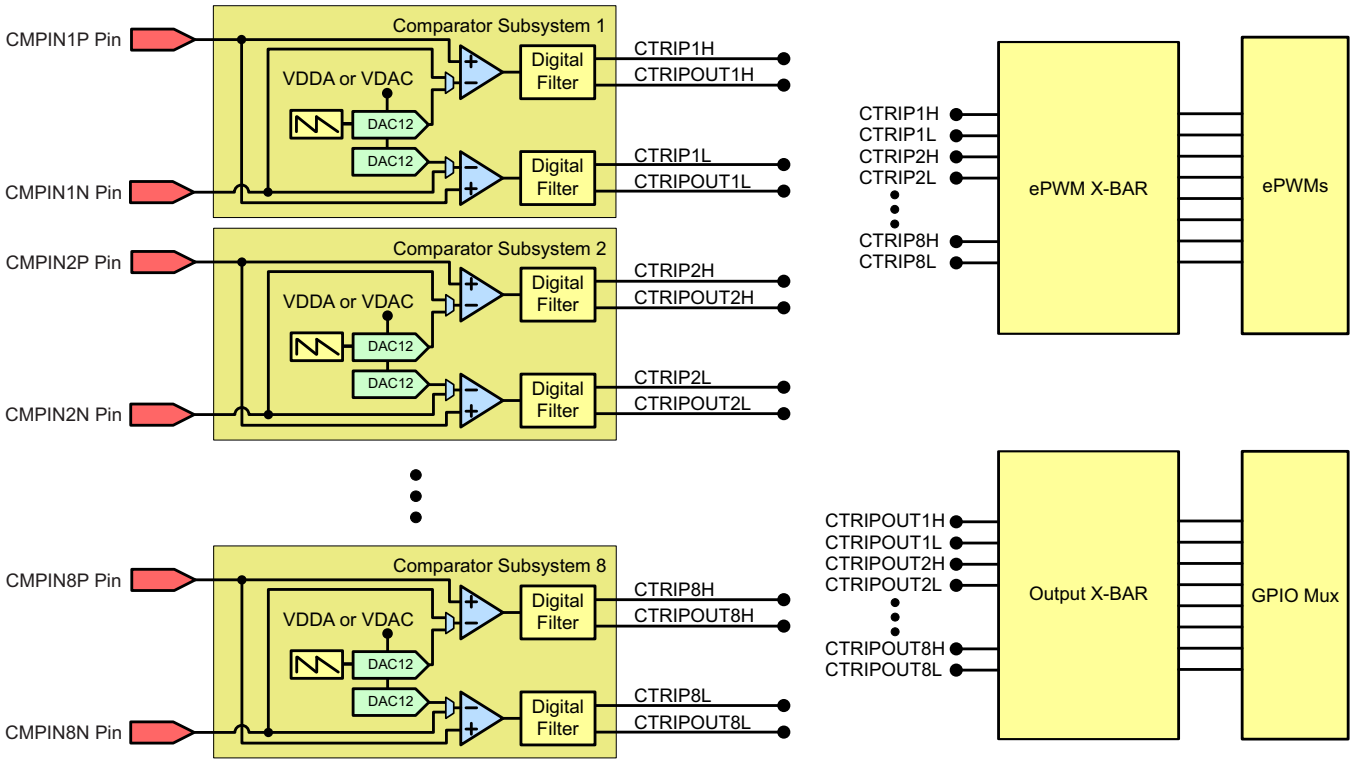


**图 5-37. CMPSS Connectivity (337-Ball ZWT and 176-Pin PTP)**


版权 © 2013–2020, Texas Instruments Incorporated

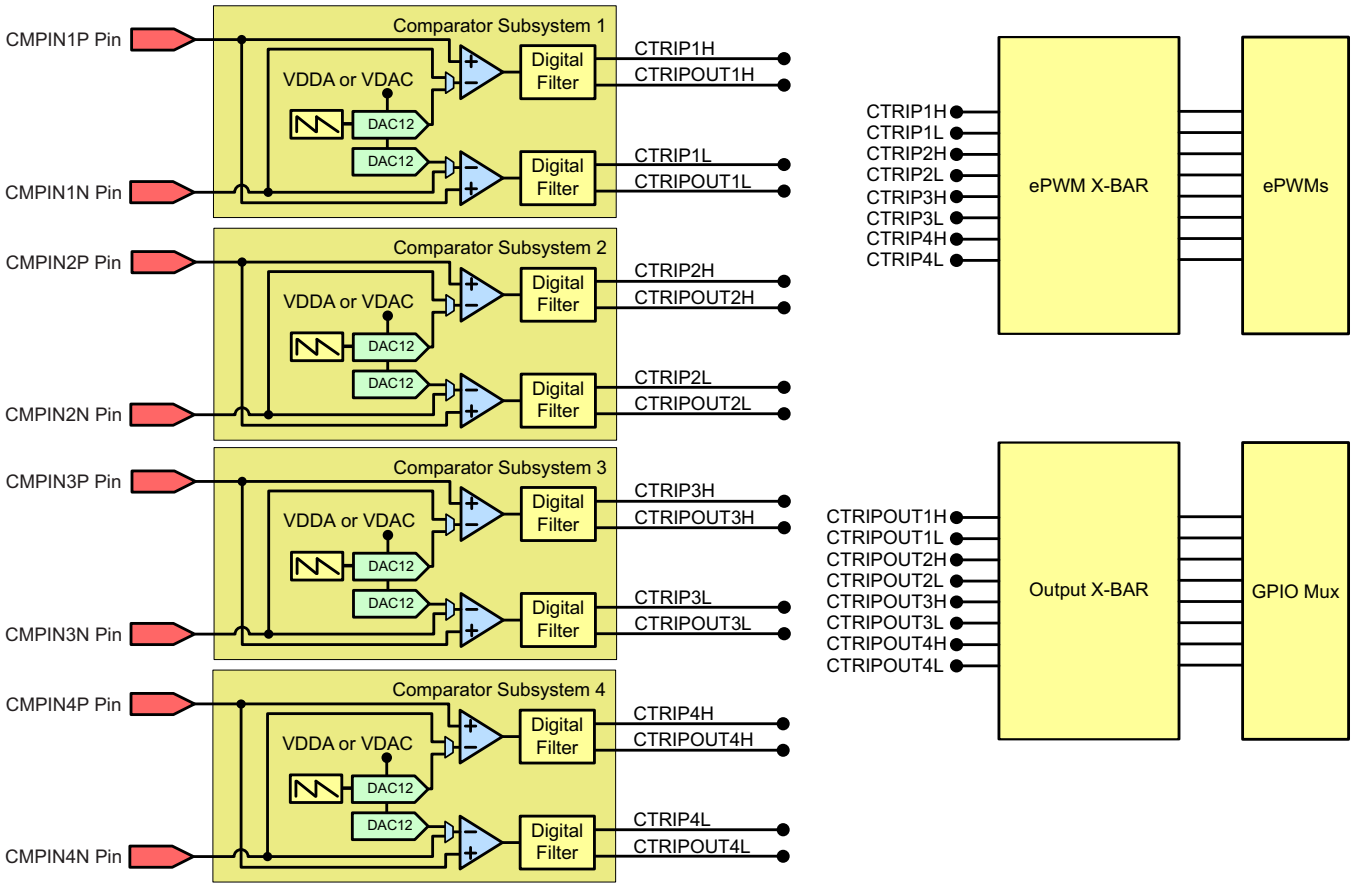


**图 5-38. CMPSS Connectivity (100-Pin PZP)**

#### 5.10.2.1 CMPSS Electrical Data and Timing

Table 5-54 shows the comparator electrical characteristics. Figure 5-39 shows the CMPSS comparator input referred offset. Figure 5-40 shows the CMPSS comparator hysteresis.

**Table 5-54. Comparator Electrical Characteristics**

over recommended operating conditions (unless otherwise noted)

| PARAMETER | TEST CONDITIONS | MIN | TYP | MAX | UNIT |
|---|---|---|---|---|---|
| Power-up time | | | | 500 (1) | µs |
| Comparator input (CMPINxx) range | | 0 | | $V_{DDA}$ | V |
| Input referred offset error | Low common mode, inverting input set to 50 mV | –20 | | 20 | mV |
| Hysteresis (2) | 1x | | 12 | | CMPSS DAC LSB |
| | 2x | | 24 | | |
| | 3x | | 36 | | |
| | 4x | | 48 | | |
| Response time (delay from CMPINx input change to output on ePWM X-BAR or Output X-BAR) | Step response | | 21 | 60 | ns |
| | Ramp response (1.65 V/µs) | | 26 | | |
| | Ramp response (8.25 mV/µs) | | 30 | | |
| Common Mode Rejection Ratio (CMRR) | | 40 | | | dB |

(1) See the "Analog Bandgap References" advisory of the *TMS320F2837xD Dual-Core MCUs Silicon Errata*.
(2) The CMPSS DAC is used as the reference to determine how much hysteresis to apply. Therefore, hysteresis will scale with the CMPSS DAC reference voltage. Hysteresis is available for all comparator input source configurations.

**NOTE**

The CMPSS inputs must be kept below $V_{DDA}$ + 0.3 V to ensure proper functional operation. If a CMPSS input exceeds this level, an internal blocking circuit will isolate the internal comparator from the external pin until the external pin voltage returns below $V_{DDA}$ + 0.3 V. During this time, the internal comparator input will be floating and can decay below $V_{DDA}$ within approximately 0.5 µs. After this time, the comparator could begin to output an incorrect result depending on the value of the other comparator input.

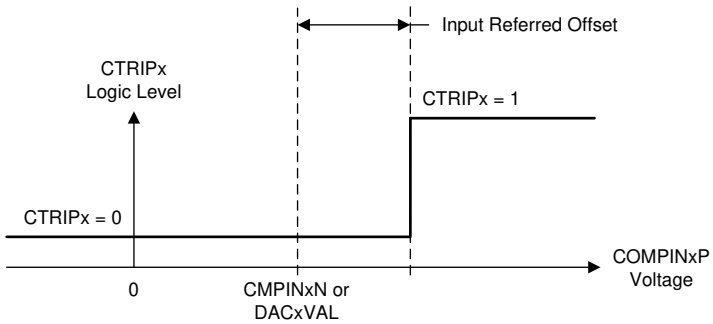


**Figure 5-39. CMPSS Comparator Input Referred Offset**


Copyright © 2013–2020, Texas Instruments Incorporated

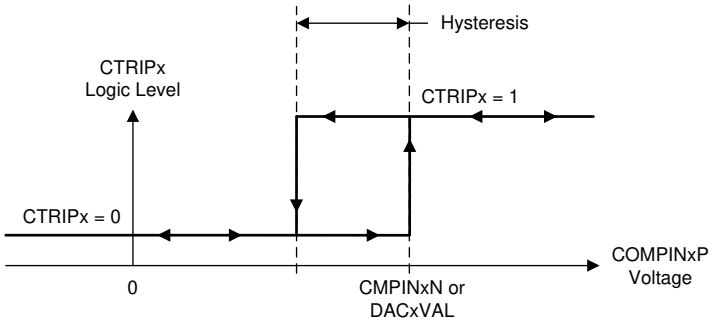


**Figure 5-40. CMPSS Comparator Hysteresis**

Table 5-55 shows the CMPSS DAC static electrical characteristics. Figure 5-41 shows the CMPSS DAC static offset. Figure 5-42 shows the CMPSS DAC static gain. Figure 5-43 shows the CMPSS DAC static linearity.

**Table 5-55. CMPSS DAC Static Electrical Characteristics**

over recommended operating conditions (unless otherwise noted)

| PARAMETER | TEST CONDITIONS | MIN | TYP | MAX | UNIT |
|---|---|---|---|---|---|
| CMPSS DAC output range | Internal reference | 0 | | $V_{DDA}$ (1) | V |
| | External reference | 0 | | VDAC | |
| Static offset error (2) | | –25 | | 25 | mV |
| Static gain error (2) | | –2 | | 2 | % of FSR |
| Static DNL | Endpoint corrected | >–1 | | 4 | LSB |
| Static INL | Endpoint corrected | –16 | | 16 | LSB |
| Settling time | Settling to 1 LSB after full-scale output change | | | 1 | µs |
| Resolution | | | 12 | | bits |
| CMPSS DAC output disturbance (3) | Error induced by comparator trip or CMPSS DAC code change within the same CMPSS module | –100 | | 100 | LSB |
| CMPSS DAC disturbance time (3) | | | 200 | | ns |
| VDAC reference voltage | When VDAC is reference | 2.4 | 2.5 or 3.0 | $V_{DDA}$ | V |
| VDAC load (4) | When VDAC is reference | | 6 | | kΩ |

(1) The maximum output voltage is $V_{DDA}$ when VDAC > $V_{DDA}$.
(2) Includes comparator input referred errors.
(3) Disturbance error may be present on the CMPSS DAC output for a certain amount of time after a comparator trip.
(4) Per active CMPSS module.

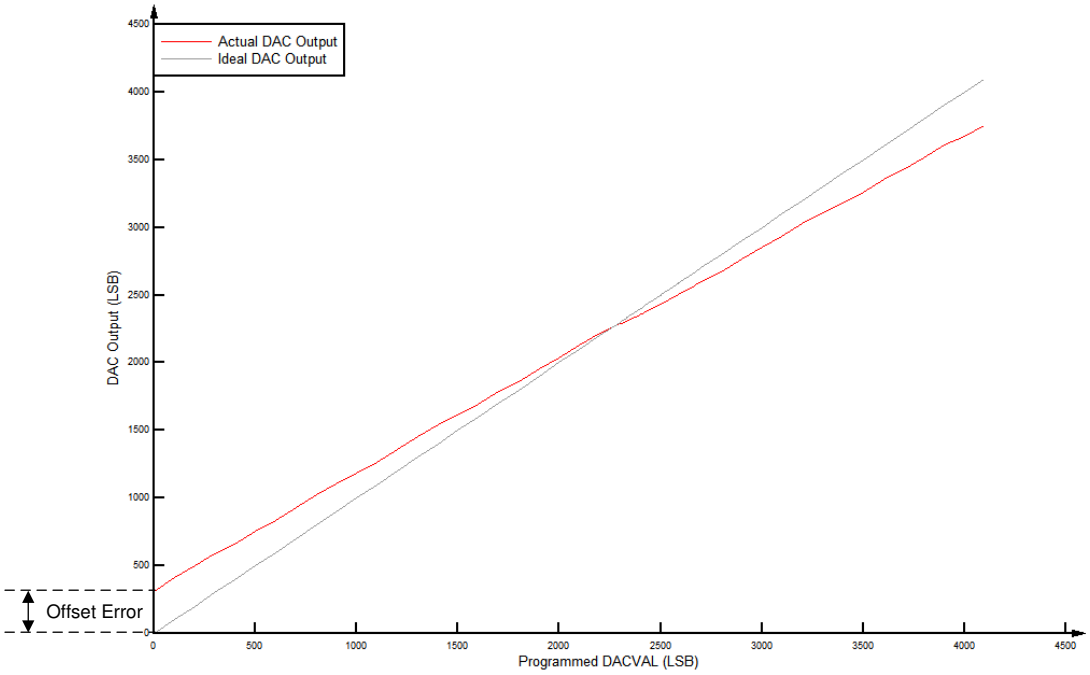


**Figure 5-41. CMPSS DAC Static Offset**


Copyright © 2013–2020, Texas Instruments Incorporated

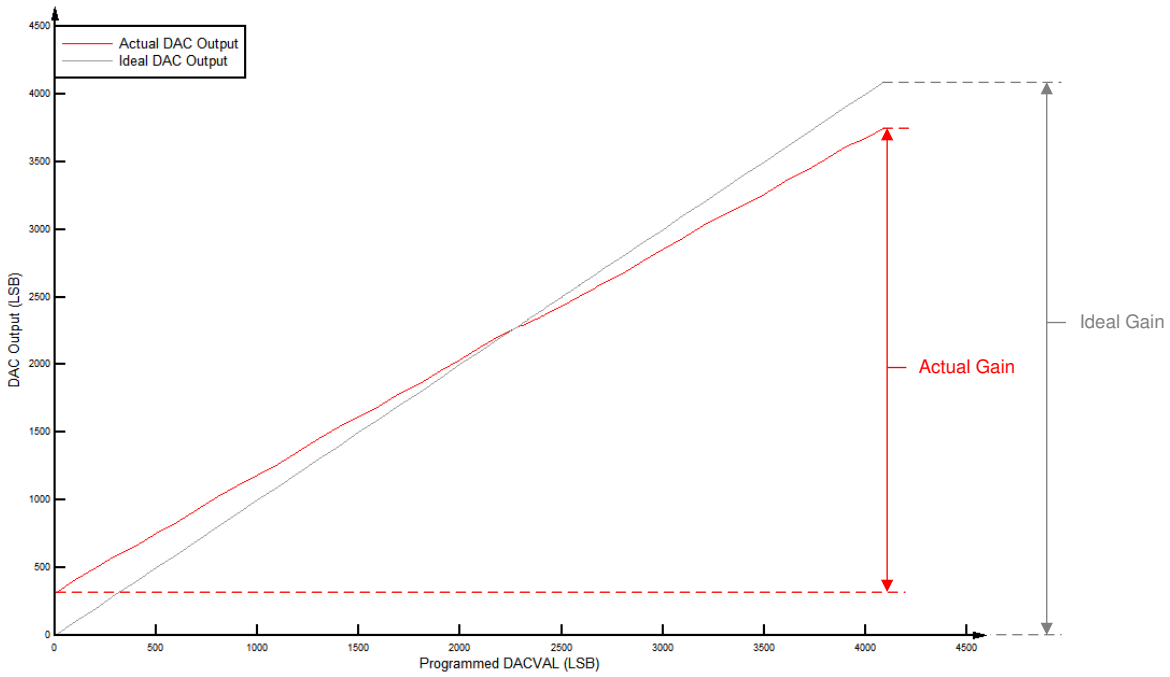


**Figure 5-42. CMPSS DAC Static Gain**

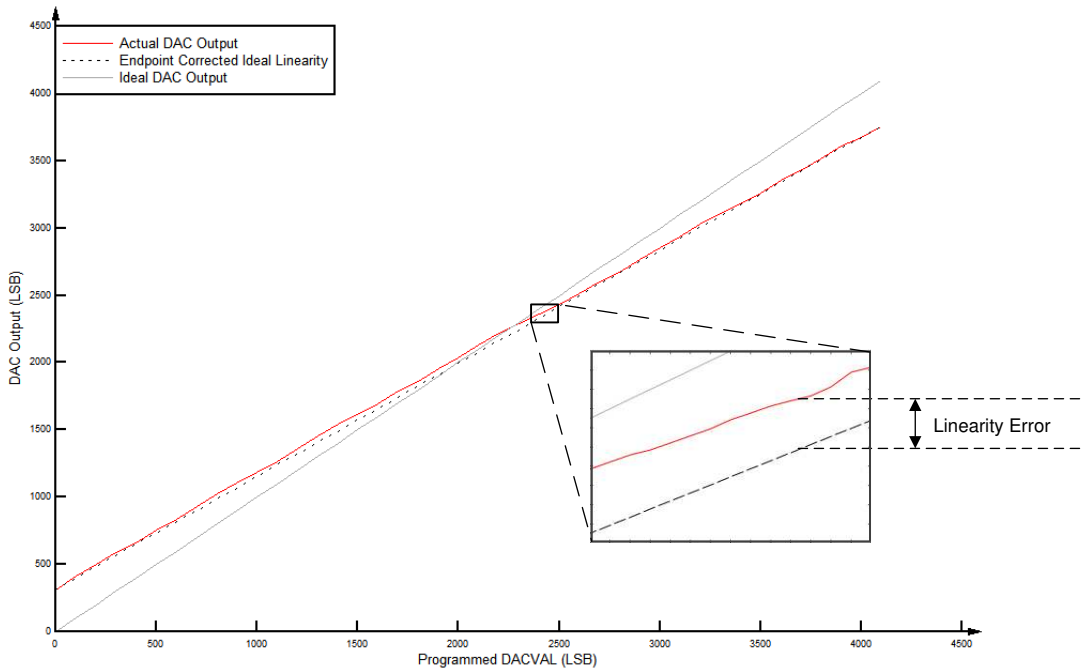


**Figure 5-43. CMPSS DAC Static Linearity**

### 5.10.3 Buffered Digital-to-Analog Converter (DAC)

The buffered DAC module consists of an internal 12-bit DAC and an analog output buffer that is capable of driving an external load. An integrated pulldown resistor on the DAC output helps to provide a known pin voltage when the output buffer is disabled. This pulldown resistor cannot be disabled and remains as a passive component on the pin, even for other shared pin mux functions. Software writes to the DAC value register can take effect immediately or can be synchronized with EPWMSYNCPER events.

Each buffered DAC has the following features:

- 12-bit programmable internal DAC
- Selectable reference voltage
- Pulldown resistor on output
- Ability to synchronize with EPWMSYNCPER

The block diagram for the buffered DAC is shown in 图 5-44.

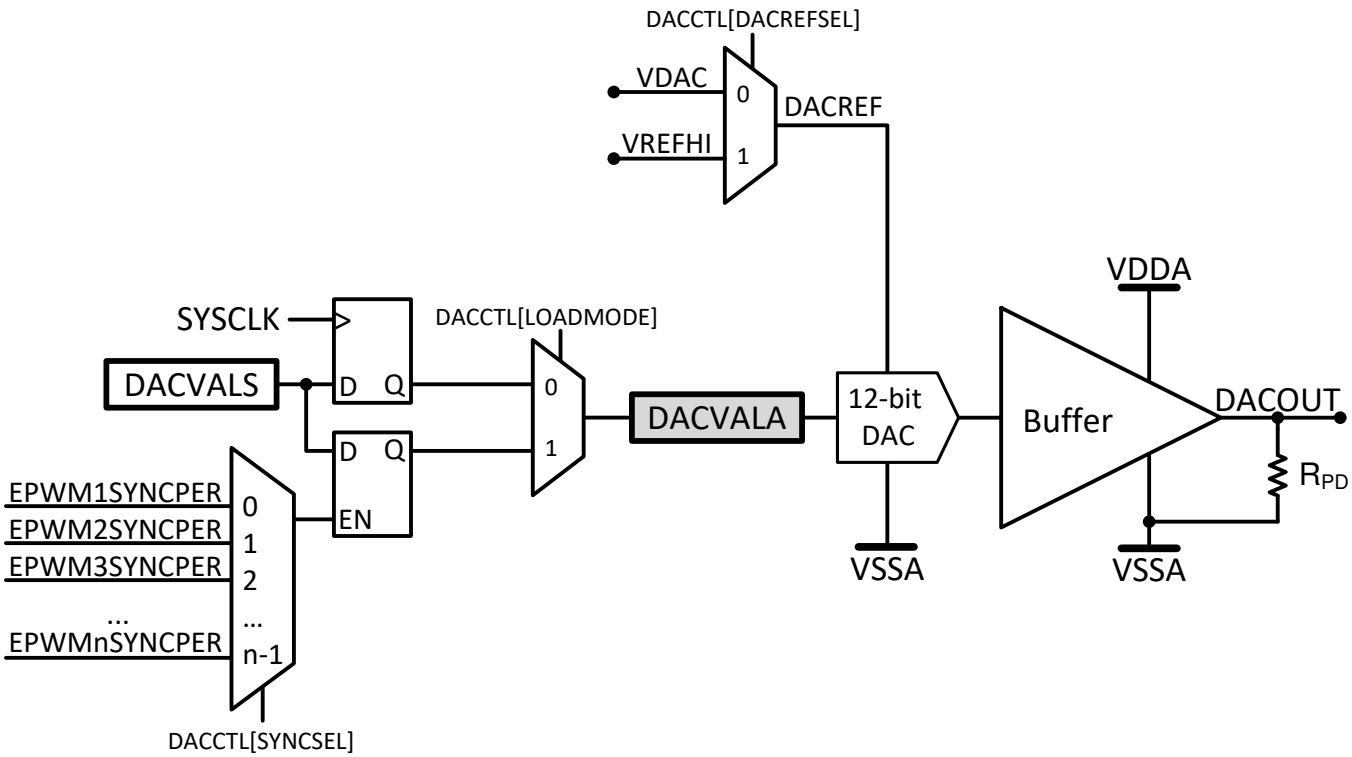


**图 5-44. DAC Module Block Diagram**


版权 © 2013–2020, Texas Instruments Incorporated

#### 5.10.3.1 Buffered DAC Electrical Data and Timing

Table 5-56 shows the buffered DAC electrical characteristics. Figure 5-45 shows the buffered DAC offset. Figure 5-46 shows the buffered DAC gain. Figure 5-47 shows the buffered DAC linearity.

**Table 5-56. Buffered DAC Electrical Characteristics**

over recommended operating conditions (unless otherwise noted)(1)

| PARAMETER | TEST CONDITIONS | MIN | TYP | MAX | UNIT |
|---|---|---|---|---|---|
| Power-up time | | | | 500(2) | µs |
| Offset error | Midpoint | –10 | | 10 | mV |
| Gain error(3) | | –2.5 | | 2.5 | % of FSR |
| DNL(4) | Endpoint corrected | > –1 | ±0.4 | 1 | LSB |
| INL | Endpoint corrected | –5 | ±2 | 5 | LSB |
| DACOUTx settling time | Settling to 2 LSBs after 0.3V-to-3V transition | | 2 | | µs |
| Resolution | | | 12 | | bits |
| Voltage output range(5) | | 0.3 | | $V_{DDA}$ – 0.3 | V |
| Capacitive load | Output drive capability | | | 100 | pF |
| Resistive load | Output drive capability | 5 | | | kΩ |
| $R_{PD}$ pulldown resistor | | | 50 | | kΩ |
| Reference voltage(6) | VDAC or $V_{REFHI}$ | 2.4 | 2.5 or 3.0 | $V_{DDA}$ | V |
| Reference input resistance(7) | VDAC or $V_{REFHI}$ | | 170 | | kΩ |
| Output noise | Integrated noise from 100 Hz to 100 kHz | | 500 | | µVrms |
| | Noise density at 10 kHz | | 711 | | nVrms/√Hz |
| Glitch energy | | | 1.5 | | V-ns |
| PSRR(8) | DC up to 1 kHz | | 70 | | dB |
| | 100 kHz | | 30 | | |
| SNR | 1020 Hz | | 67 | | dB |
| THD | 1020 Hz | | –63 | | dB |
| SFDR | 1020 Hz, including harmonics and spurs | | 66 | | dBc |
| | 1020 Hz, including only spurs | | 104 | | |

(1) Typical values are measured with $V_{REFHI}$ = 3.3 V unless otherwise noted. Minimum and Maximum values are tested or characterized with $V_{REFHI}$ = 2.5 V.
(2) See the "Analog Bandgap References" advisory of the *TMS320F2837xD Dual-Core MCUs Silicon Errata*.
(3) Gain error is calculated for linear output range.
(4) The DAC output is monotonic.
(5) This is the linear output range of the DAC. The DAC can generate voltages outside this range, but the output voltage will not be linear due to the buffer.
(6) For best PSRR performance, VDAC or $V_{REFHI}$ should be less than $V_{DDA}$.
(7) Per active Buffered DAC module.
(8) $V_{REFHI}$ = 3.2 V, $V_{DDA}$ = 3.3 V DC + 100 mV Sine.

**NOTE**

The VDAC pin must be kept below $V_{DDA}$ + 0.3 V to ensure proper functional operation. If the VDAC pin exceeds this level, a blocking circuit may activate, and the internal value of VDAC may float to 0 V internally, giving improper DAC output.

**NOTE**

The $V_{REFHI}$ pin must be kept below $V_{DDA}$ + 0.3 V to ensure proper functional operation. If the $V_{REFHI}$ pin exceeds this level, a blocking circuit may activate, and the internal value of $V_{REFHI}$ may float to 0 V internally, giving improper ADC conversion or DAC output.

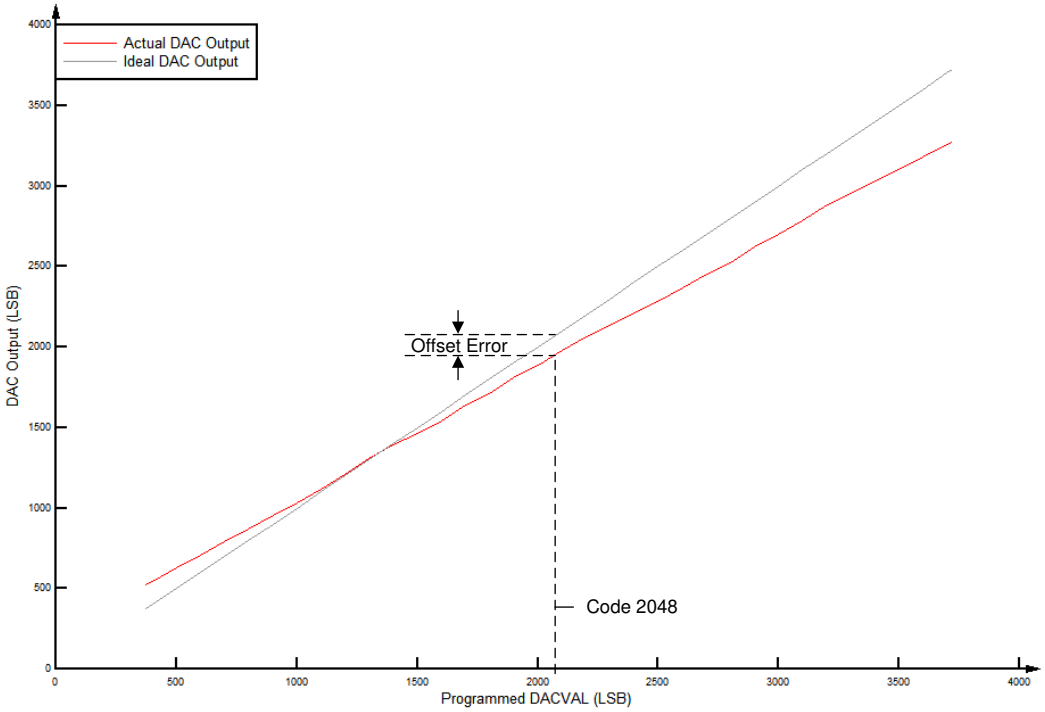


**Figure 5-45. Buffered DAC Offset**


Copyright © 2013–2020, Texas Instruments Incorporated

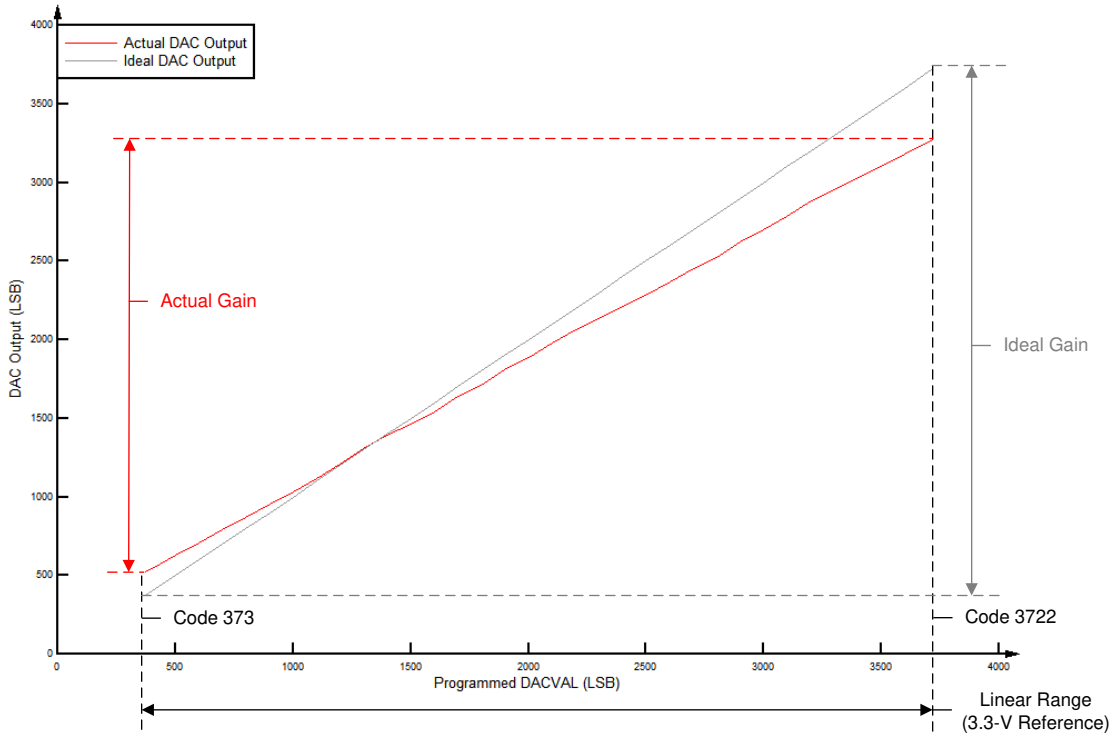


**Figure 5-46. Buffered DAC Gain**

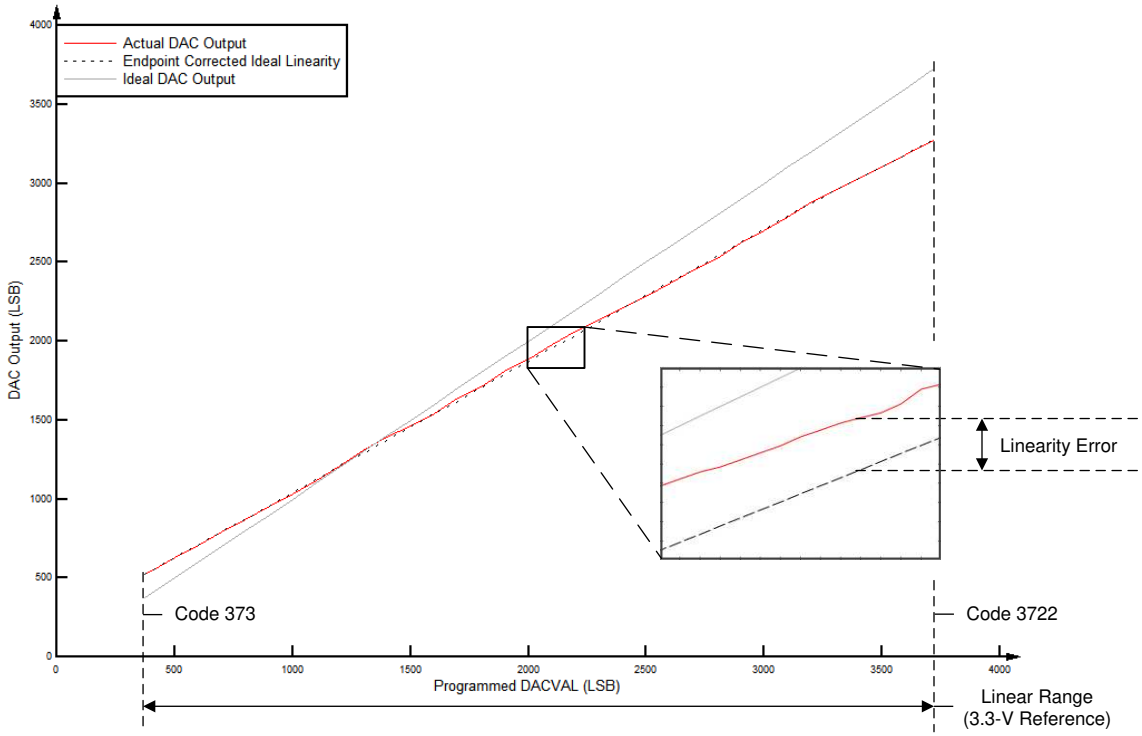


**Figure 5-47. Buffered DAC Linearity**

## 5.11 Control Peripherals

**注**

For the actual number of each peripheral on a specific device, see Table 3-1.

### *5.11.1 Enhanced Capture (eCAP)*

The eCAP module can be used in systems where accurate timing of external events is important.

Applications for eCAP include:

- Speed measurements of rotating machinery (for example, toothed sprockets sensed through Hall sensors)
- Elapsed time measurements between position sensor pulses
- Period and duty cycle measurements of pulse train signals
- Decoding current or voltage amplitude derived from duty cycle encoded current/voltage sensors

The eCAP module includes the following features:

- 4-event time-stamp registers (each 32 bits)
- Edge-polarity selection for up to four sequenced time-stamp capture events
- Interrupt on either of the four events
- Single shot capture of up to four event timestamps
- Continuous mode capture of timestamps in a four-deep circular buffer
- Absolute time-stamp capture
- Difference (Delta) mode time-stamp capture
- All of the above resources dedicated to a single input pin
- When not used in capture mode, the eCAP module can be configured as a single-channel PWM output (APWM).

The eCAP inputs connect to any GPIO input through the Input X-BAR. The APWM outputs connect to GPIO pins through the Output X-BAR to OUTPUTx positions in the GPIO mux. See Section 4.4.2 and Section 4.4.3.

图 5-48 shows the block diagram of an eCAP module.


版权 © 2013–2020, Texas Instruments Incorporated

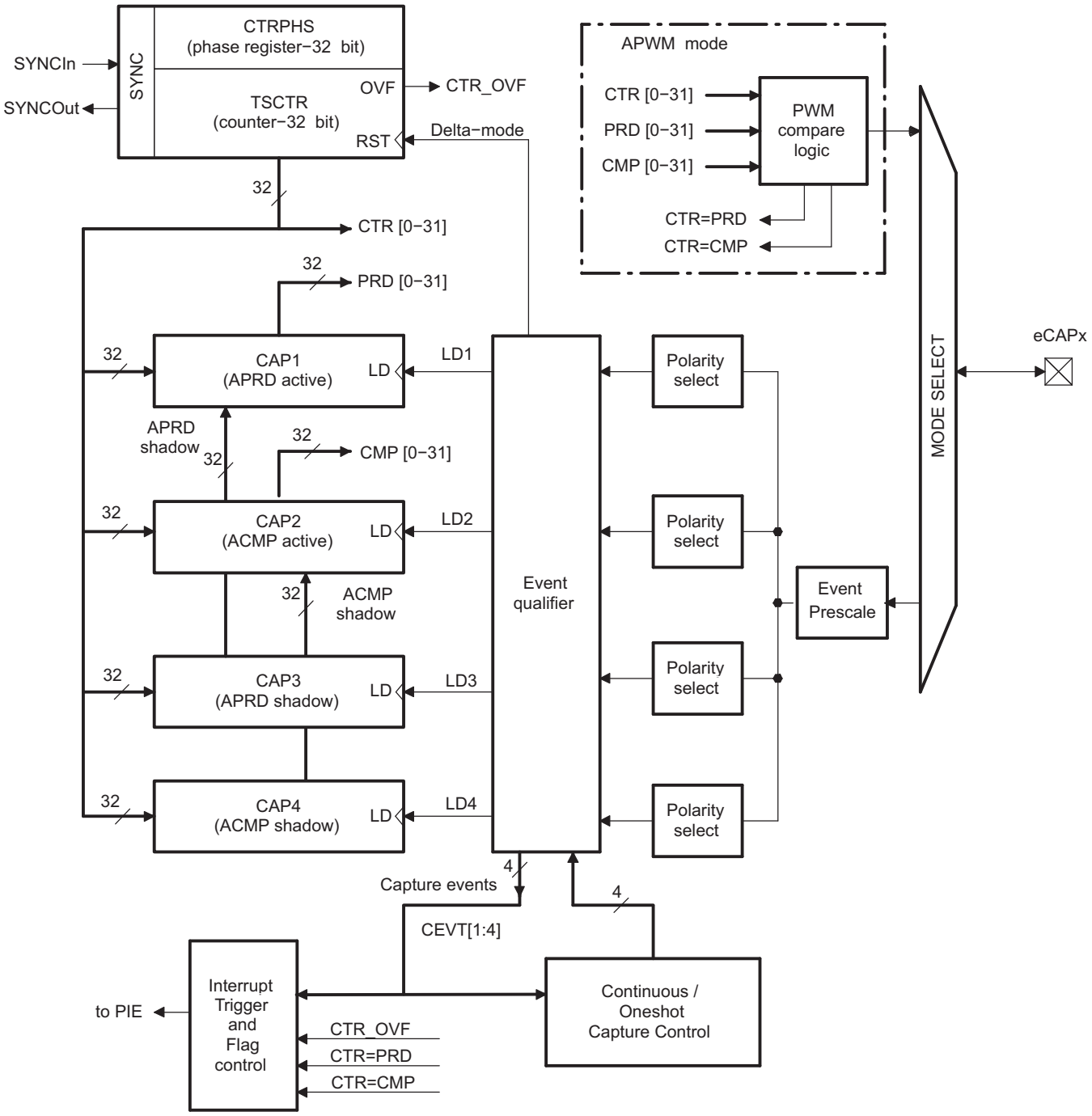


**图 5-48. eCAP Block Diagram**

The eCAP module is clocked by PERx.SYSCLK.

The clock enable bits (ECAP1–ECAP6) in the PCLKCR3 register turn off the eCAP module individually (for low-power operation). Upon reset, ECAP1ENCLK is set to low, indicating that the peripheral clock is off.

#### 5.11.1.1 eCAP Electrical Data and Timing

Table 5-57 shows the eCAP timing requirement and Table 5-58 shows the eCAP switching characteristics.

**Table 5-57. eCAP Timing Requirement(1)**

| | | MIN | MAX | UNIT |
|---|---|---|---|---|
| $t_{w(CAP)}$ Capture input pulse width | Asynchronous | $2t_{c(SYSCLK)}$ | | cycles |
| | Synchronous | $2t_{c(SYSCLK)}$ | | cycles |
| | With input qualifier | $1t_{c(SYSCLK)} + t_{w(IQSW)}$ | | cycles |

(1) For an explanation of the input qualifier parameters, see Table 5-24.

**Table 5-58. eCAP Switching Characteristics**

over recommended operating conditions (unless otherwise noted)

| PARAMETER | | MIN | MAX | UNIT |
|---|---|---|---|---|
| $t_{w(APWM)}$ | Pulse duration, APWMx output high/low | 20 | | ns |


版权 © 2013–2020, Texas Instruments Incorporated

### 5.11.2 Enhanced Pulse Width Modulator (ePWM)

The ePWM peripheral is a key element in controlling many of the power electronic systems found in both commercial and industrial equipment. The ePWM type-4 module is able to generate complex pulse width waveforms with minimal CPU overhead by building the peripheral up from smaller modules with separate resources that can operate together to form a system. Some of the highlights of the ePWM type-4 module include complex waveform generation, dead-band generation, a flexible synchronization scheme, advanced trip-zone functionality, and global register reload capabilities.

图 5-49 shows the signal interconnections with the ePWM. 图 5-50 shows the ePWM trip input connectivity.

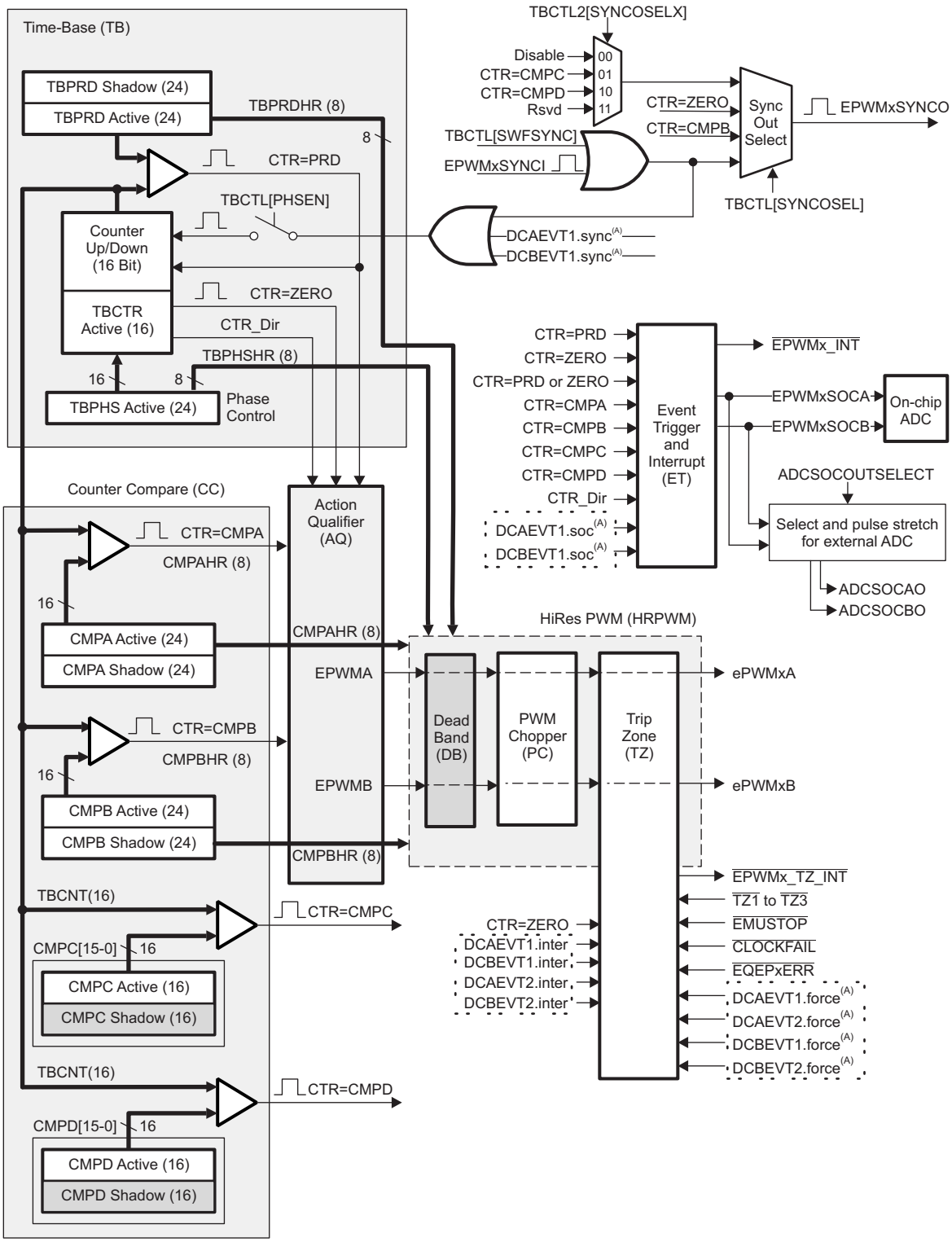


Copyright © 2017, Texas Instruments Incorporated

A. These events are generated by the ePWM digital compare (DC) submodule based on the levels of the TRIPIN inputs.

**图 5-49. ePWM Submodules and Critical Internal Signal Interconnects**

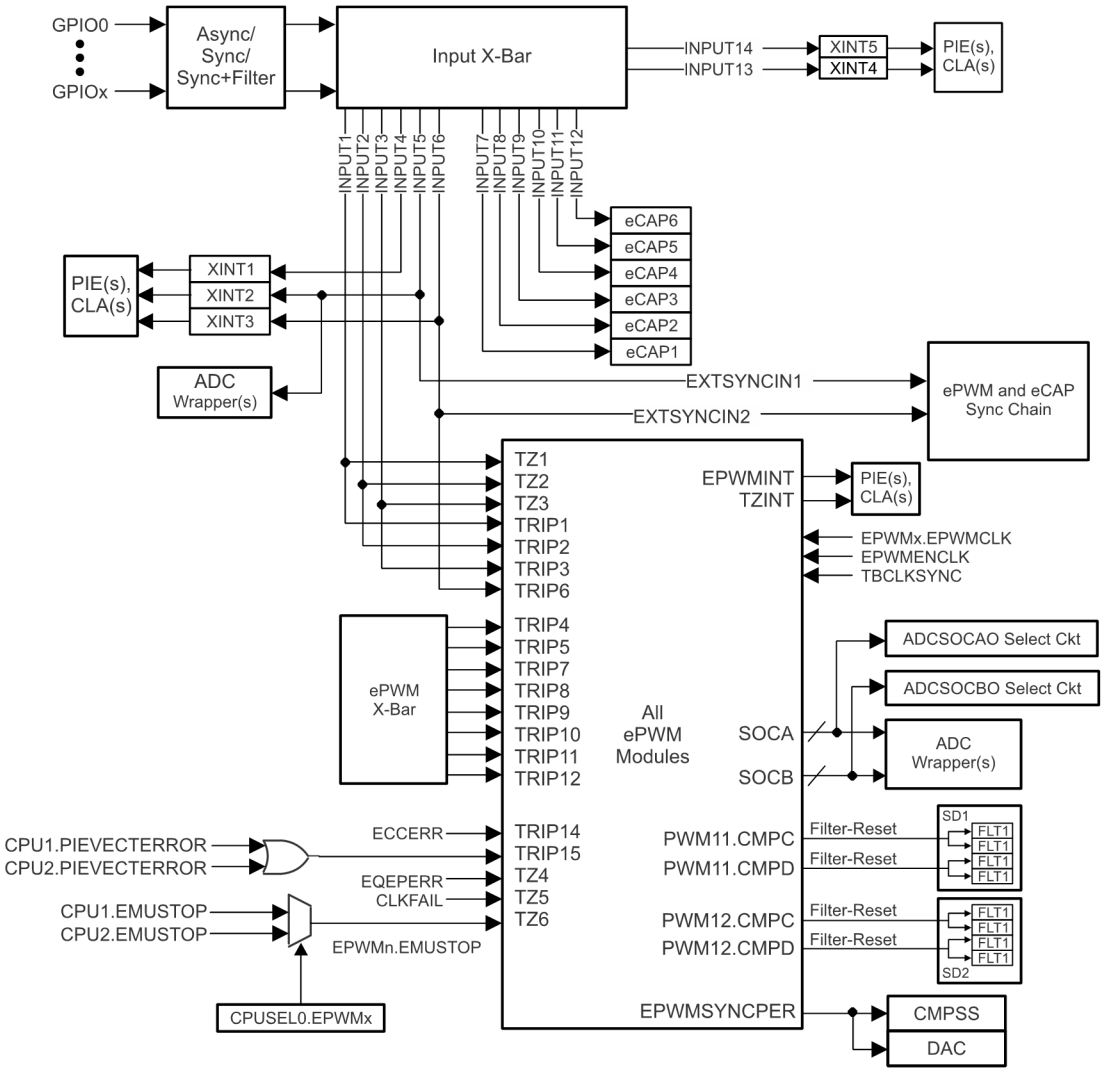


**图 5-50. ePWM Trip Input Connectivity**

#### 5.11.2.1 Control Peripherals Synchronization

The ePWM and eCAP synchronization chain on the device provides flexibility in partitioning the ePWM and eCAP modules between CPU1 and CPU2 and allows localized synchronization within the modules belonging to the same CPU. Like the other peripherals, the partitioning of the ePWM and eCAP modules needs to be done using the CPUSELx registers. 图 5-51 shows the synchronization chain architecture.

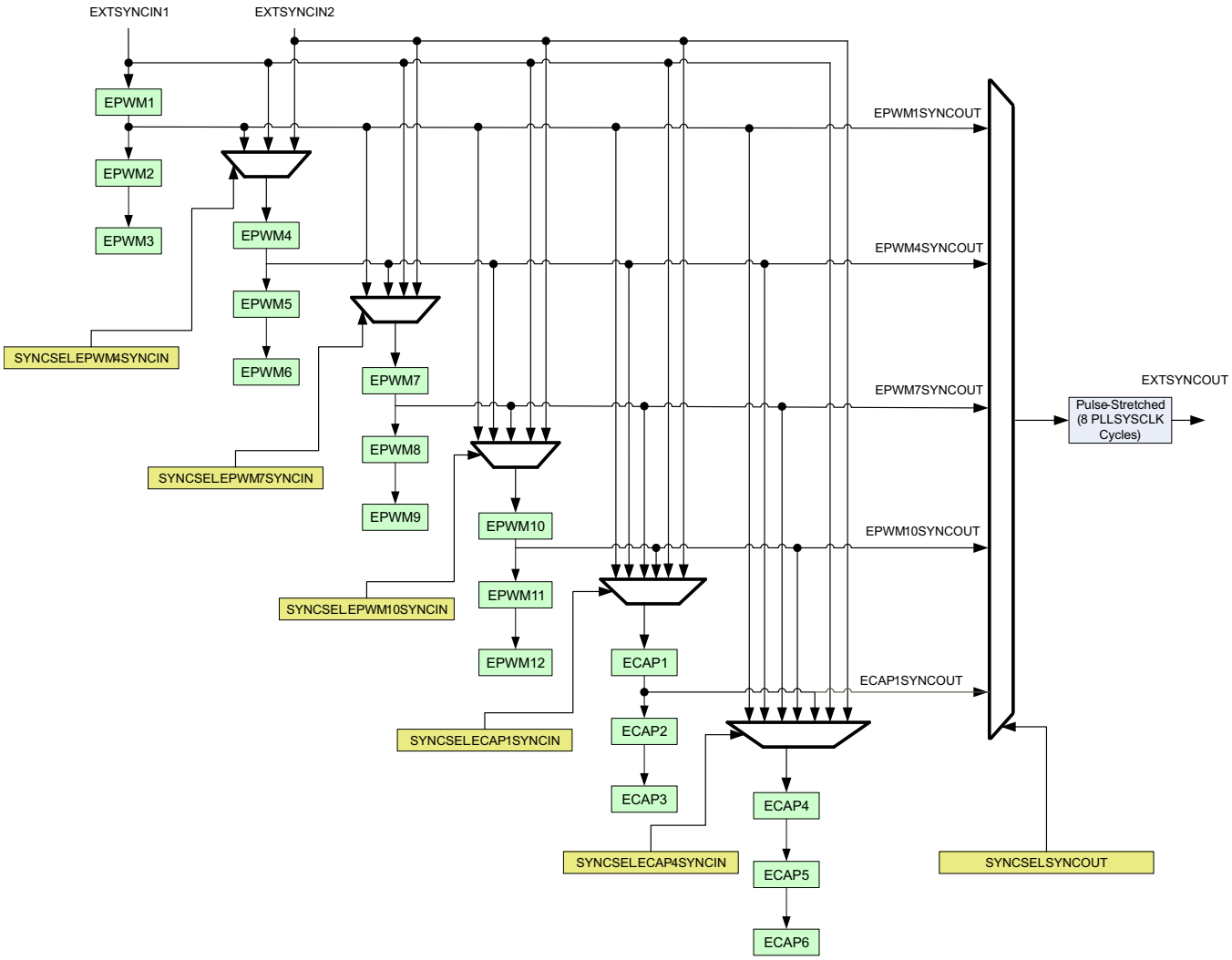


**图 5-51. Synchronization Chain Architecture**


版权 © 2013–2020, Texas Instruments Incorporated

#### 5.11.2.2 ePWM Electrical Data and Timing

Table 5-59 shows the PWM timing requirements and Table 5-60 shows the PWM switching characteristics.

**Table 5-59. ePWM Timing Requirements(1)**

| | | | MIN | MAX | UNIT |
|---|---|---|---|---|---|
| $f_{(EPWM)}$ | Frequency, EPWMCLK(2) | | | 100 | MHz |
| $t_{w(SYNCIN)}$ | Sync input pulse width | Asynchronous | $2t_{c(EPWMCLK)}$ | | cycles |
| | | Synchronous | $2t_{c(EPWMCLK)}$ | | cycles |
| | | With input qualifier | $1t_{c(EPWMCLK)} + t_{w(IQSW)}$ | | cycles |

(1) For an explanation of the input qualifier parameters, see Table 5-24.
(2) For SYSCLK above 100 MHz, the EPWMCLK must be half of SYSCLK.

**Table 5-60. ePWM Switching Characteristics**

over recommended operating conditions (unless otherwise noted)

| PARAMETER | | MIN | MAX | UNIT |
|---|---|---|---|---|
| $t_{w(PWM)}$ | Pulse duration, PWMx output high/low | 20 | | ns |
| $t_{w(SYNCOUT)}$ | Sync output pulse width | $8t_{c(SYSCLK)}$ | | cycles |
| $t_{d(TZ-PWM)}$ | Delay time, trip input active to PWM forced high<br>Delay time, trip input active to PWM forced low<br>Delay time, trip input active to PWM Hi-Z | | 25 | ns |

##### *5.11.2.2.1 Trip-Zone Input Timing*

Table 5-61 shows the trip-zone input timing requirements. Figure 5-52 shows the PWM Hi-Z characteristics.

**Table 5-61. Trip-Zone Input Timing Requirements(1)**

| | | MIN | MAX | UNIT |
|---|---|---|---|---|
| $t_{w(TZ)}$ Pulse duration, $\overline{TZx}$ input low | Asynchronous | $1t_{c(EPWMCLK)}$ | | cycles |
| | Synchronous | $2t_{c(EPWMCLK)}$ | | cycles |
| | With input qualifier | $1t_{c(EPWMCLK)} + t_{w(IQSW)}$ | | cycles |

(1) For an explanation of the input qualifier parameters, see Table 5-24.

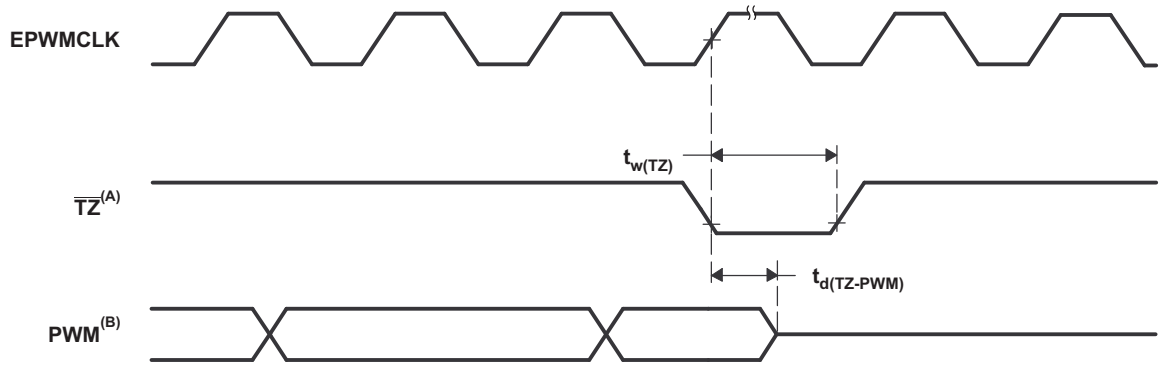


A. $\overline{TZ}$: $\overline{TZ1}$, $\overline{TZ2}$, $\overline{TZ3}$, TRIP1–TRIP12
B. PWM refers to all the PWM pins in the device. The state of the PWM pins after $\overline{TZ}$ is taken high depends on the PWM recovery software.

**Figure 5-52. PWM Hi-Z Characteristics**

#### 5.11.2.3 External ADC Start-of-Conversion Electrical Data and Timing

表 5-62 shows the external ADC start-of-conversion switching characteristics. 图 5-53 shows the $\overline{\text{ADCSOCAO}}$ or $\overline{\text{ADCSOCBO}}$ timing.

**表 5-62. External ADC Start-of-Conversion Switching Characteristics**

over recommended operating conditions (unless otherwise noted)

| PARAMETER | | MIN | MAX | UNIT |
|---|---|---|---|---|
| $t_{w(ADCSOCL)}$ | Pulse duration, $\overline{\text{ADCSOCxO}}$ low | $32t_{c(SYSCLK)}$ | | cycles |

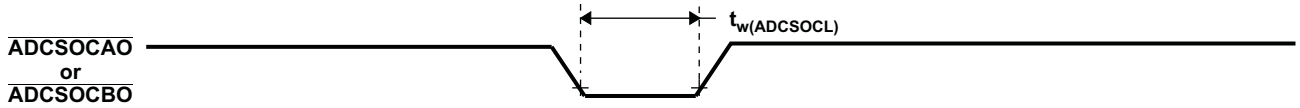


**图 5-53. $\overline{\text{ADCSOCAO}}$ or $\overline{\text{ADCSOCBO}}$ Timing**


版权 © 2013–2020, Texas Instruments Incorporated

### 5.11.3 Enhanced Quadrature Encoder Pulse (eQEP)

The eQEP module interfaces directly with linear or rotary incremental encoders to obtain position, direction, and speed information from rotating machines used in high-performance motion and position-control systems.

Each eQEP peripheral comprises five major functional blocks:

- Quadrature Capture Unit (QCAP)
- Position Counter/Control Unit (PCCU)
- Quadrature Decoder Unit (QDU)
- Unit Time Base for speed and frequency measurement (UTIME)
- Watchdog timer for detecting stalls (QWDOG)

The eQEP peripherals are clocked by PERx.SYSCLK. 图 5-54 shows the eQEP block diagram.

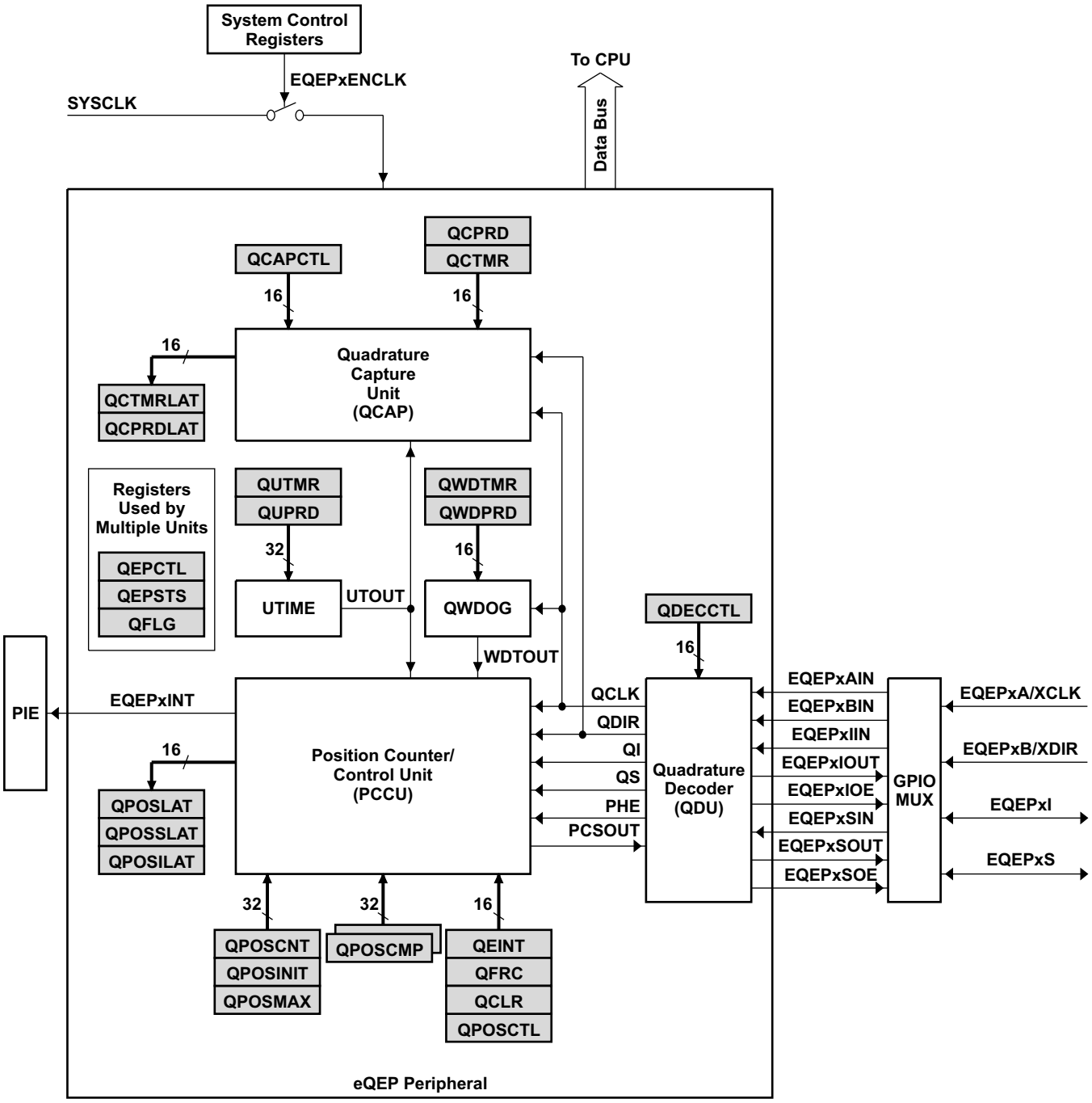


图 5-54. eQEP Block Diagram


版权 © 2013–2020, Texas Instruments Incorporated

#### 5.11.3.1 eQEP Electrical Data and Timing

Table 5-63 lists the eQEP timing requirement and Table 5-64 lists the eQEP switching characteristics.

**Table 5-63. eQEP Timing Requirements(1)**

| | | | MIN | MAX | UNIT |
|---|---|---|---|---|---|
| $t_{w(QEPP)}$ | QEP input period | Asynchronous(2)/Synchronous | $2t_{c(SYSCLK)}$ | | cycles |
| | | With input qualifier | $2[1t_{c(SYSCLK)} + t_{w(IQSW)}]$ | | cycles |
| $t_{w(INDEXH)}$ | QEP Index Input High time | Asynchronous(2)/Synchronous | $2t_{c(SYSCLK)}$ | | cycles |
| | | With input qualifier | $2t_{c(SYSCLK)} + t_{w(IQSW)}$ | | cycles |
| $t_{w(INDEXL)}$ | QEP Index Input Low time | Asynchronous(2)/Synchronous | $2t_{c(SYSCLK)}$ | | cycles |
| | | With input qualifier | $2t_{c(SYSCLK)} + t_{w(IQSW)}$ | | cycles |
| $t_{w(STROBH)}$ | QEP Strobe High time | Asynchronous(2)/Synchronous | $2t_{c(SYSCLK)}$ | | cycles |
| | | With input qualifier | $2t_{c(SYSCLK)} + t_{w(IQSW)}$ | | cycles |
| $t_{w(STROBL)}$ | QEP Strobe Input Low time | Asynchronous(2)/Synchronous | $2t_{c(SYSCLK)}$ | | cycles |
| | | With input qualifier | $2t_{c(SYSCLK)} + t_{w(IQSW)}$ | | cycles |

(1) For an explanation of the input qualifier parameters, see Table 5-24.
(2) See the *TMS320F2837xD Dual-Core MCUs Silicon Errata* for limitations in the asynchronous mode.

**Table 5-64. eQEP Switching Characteristics**

over recommended operating conditions (unless otherwise noted)

| PARAMETER | | MIN | MAX | UNIT |
|---|---|---|---|---|
| $t_{d(CNTR)xin}$ | Delay time, external clock to counter increment | | $4t_{c(SYSCLK)}$ | cycles |
| $t_{d(PCS\text{-}OUT)QEP}$ | Delay time, QEP input edge to position compare sync output | | $6t_{c(SYSCLK)}$ | cycles |

### 5.11.4 High-Resolution Pulse Width Modulator (HRPWM)

The HRPWM combines multiple delay lines in a single module and a simplified calibration system by using a dedicated calibration delay line. For each ePWM module, there are two HR outputs:

- HR Duty and Deadband control on Channel A
- HR Duty and Deadband control on Channel B

The HRPWM module offers PWM resolution (time granularity) that is significantly better than what can be achieved using conventionally derived digital PWM methods. The key points for the HRPWM module are:

- Significantly extends the time resolution capabilities of conventionally derived digital PWM
- This capability can be used in both single edge (duty cycle and phase-shift control) as well as dual edge control for frequency/period modulation.
- Finer time granularity control or edge positioning is controlled through extensions to the Compare A, B, phase, period and deadband registers of the ePWM module.

**注**

The minimum HRPWMCLK frequency allowed for HRPWM is 60 MHz.

#### 5.11.4.1 HRPWM Electrical Data and Timing

Table 5-65 lists the high-resolution PWM timing requirements. Table 5-66 lists the high-resolution PWM switching characteristics.

**Table 5-65. High-Resolution PWM Timing Requirements**

| | | MIN | MAX | UNIT |
|---|---|---|---|---|
| $f_{(EPWM)}$ | Frequency, EPWMCLK (1) | | 100 | MHz |
| $f_{(HRPWM)}$ | Frequency, HRPWMCLK | 60 | 100 | MHz |

(1) For SYSCLK above 100 MHz, the EPWMCLK must be half of SYSCLK.

**Table 5-66. High-Resolution PWM Characteristics**

| PARAMETER | MIN | TYP | MAX | UNIT |
|---|---|---|---|---|
| Micro Edge Positioning (MEP) step size (1) | | 150 | 310 | ps |

(1) The MEP step size will be largest at high temperature and minimum voltage on $V_{DD}$. MEP step size will increase with higher temperature and lower voltage and decrease with lower temperature and higher voltage.
Applications that use the HRPWM feature should use MEP Scale Factor Optimizer (SFO) estimation software functions. See the TI software libraries for details of using SFO functions in end applications. SFO functions help to estimate the number of MEP steps per SYSCLK period dynamically while the HRPWM is in operation.


版权 © 2013–2020, Texas Instruments Incorporated

### 5.11.5 Sigma-Delta Filter Module (SDFM)

The SDFM is a four-channel digital filter designed specifically for current measurement and resolver position decoding in motor control applications. Each channel can receive an independent sigma-delta (ΣΔ) modulated bit stream. The bit streams are processed by four individually programmable digital decimation filters. The filter set includes a fast comparator for immediate digital threshold comparisons for overcurrent and undercurrent monitoring. 图 5-55 shows a block diagram of the SDFMs.

SDFM features include:

- Eight external pins per SDFM module:
  - Four sigma-delta data input pins per SDFM module (SDx_Dy, where x = 1 to 2 and y = 1 to 4)
  - Four sigma-delta clock input pins per SDFM module (SDx_Cy, where x = 1 to 2 and y = 1 to 4)
- Four different configurable modulator clock modes:
  - Modulator clock rate equals modulator data rate
  - Modulator clock rate running at half the modulator data rate
  - Modulator data is Manchester encoded. Modulator clock not required.
  - Modulator clock rate is double that of modulator data rate
- Four independent configurable comparator units:
  - Four different filter type selection (Sinc1/Sinc2/Sincfast/Sinc3) options available
  - Ability to detect over-value and under-value conditions
  - Comparator Over-Sampling Ratio (COSR) value for comparator programmable from 1 to 32
- Four independent configurable data filter units:
  - Four different filter type selection (Sinc1/Sinc2/Sincfast/Sinc3) options available
  - Data filter Over-Sampling Ratio (DOSR) value for data filter unit programmable from 1 to 256
  - Ability to enable or disable individual filter module
  - Ability to synchronize all four independent filters of a SDFM module using the Master Filter Enable (MFE) bit or the PWM signals.
- Filter data can be 16-bit or 32-bit representation
- PWMs can be used to generate modulator clock for sigma-delta modulators

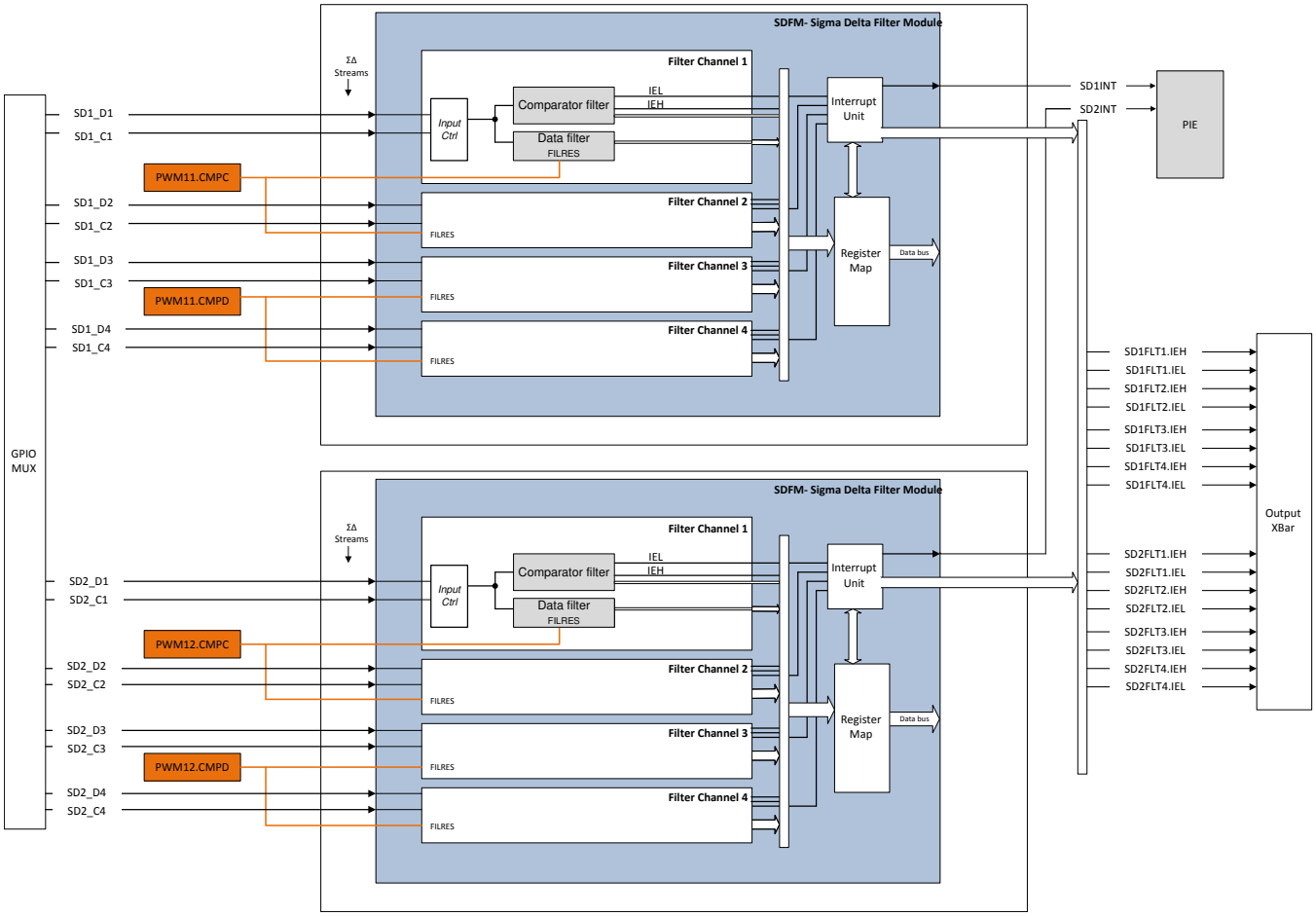


**图 5-55. SDFM Block Diagram**


版权 © 2013–2020, Texas Instruments Incorporated

#### 5.11.5.1 SDFM Electrical Data and Timing (Using ASYNC)

SDFM operation with asynchronous GPIO is defined by setting GPyQSELn = 0b11. Table 5-67 lists the SDFM timing requirements when using the asynchronous GPIO (ASYNC) option. Figure 5-56 through Figure 5-59 show the SDFM timing diagrams.

**Table 5-67. SDFM Timing Requirements When Using Asynchronous GPIO (ASYNC) Option**

| | | MIN | MAX | UNIT |
|---|---|---|---|---|
| **Mode 0** | | | | |
| $t_{c(SDC)M0}$ | Cycle time, SDx_Cy | 40 | 256 * SYSCLK period | ns |
| $t_{w(SDCH)M0}$ | Pulse duration, SDx_Cy high | 10 | $t_{c(SDC)M0}$ – 10 | ns |
| $t_{su(SDDV-SDCH)M0}$ | Setup time, SDx_Dy valid before SDx_Cy goes high | 5 | | ns |
| $t_{h(SDCH-SDD)M0}$ | Hold time, SDx_Dy wait after SDx_Cy goes high | 5 | | ns |
| **Mode 1** | | | | |
| $t_{c(SDC)M1}$ | Cycle time, SDx_Cy | 80 | 256 * SYSCLK period | ns |
| $t_{w(SDCH)M1}$ | Pulse duration, SDx_Cy high | 10 | $t_{c(SDC)M1}$ – 10 | ns |
| $t_{su(SDDV-SDCL)M1}$ | Setup time, SDx_Dy valid before SDx_Cy goes low | 5 | | ns |
| $t_{su(SDDV-SDCH)M1}$ | Setup time, SDx_Dy valid before SDx_Cy goes high | 5 | | ns |
| $t_{h(SDCL-SDD)M1}$ | Hold time, SDx_Dy wait after SDx_Cy goes low | 5 | | ns |
| $t_{h(SDCH-SDD)M1}$ | Hold time, SDx_Dy wait after SDx_Cy goes high | 5 | | ns |
| **Mode 2** | | | | |
| $t_{c(SDD)M2}$ | Cycle time, SDx_Dy | 8 * $t_{c(SYSCLK)}$ | 20 * $t_{c(SYSCLK)}$ | ns |
| $t_{w(SDDH)M2}$ | Pulse duration, SDx_Dy high | 10 | | ns |
| **Mode 3** | | | | |
| $t_{c(SDC)M3}$ | Cycle time, SDx_Cy | 40 | 256 * SYSCLK period | ns |
| $t_{w(SDCH)M3}$ | Pulse duration, SDx_Cy high | 10 | $t_{c(SDC)M3}$ – 5 | ns |
| $t_{su(SDDV-SDCH)M3}$ | Setup time, SDx_Dy valid before SDx_Cy goes high | 5 | | ns |
| $t_{h(SDCH-SDD)M3}$ | Hold time, SDx_Dy wait after SDx_Cy goes high | 5 | | ns |

**NOTE**

The SDFM clock inputs (SDx_Cy pins) directly clock the SDFM module when there is no GPIO input synchronization. Any glitches or ringing noise on these inputs can corrupt the SDFM module operation. Special precautions should be taken on these signals to ensure a clean and noise-free signal that meets SDFM timing requirements. Precautions such as series termination for ringing due to any impedance mismatch of the clock driver and spacing of traces from other noisy signals are recommended.

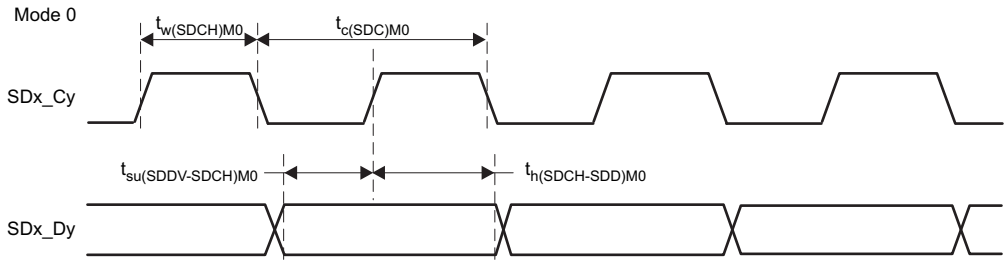


**Figure 5-56. SDFM Timing Diagram – Mode 0**

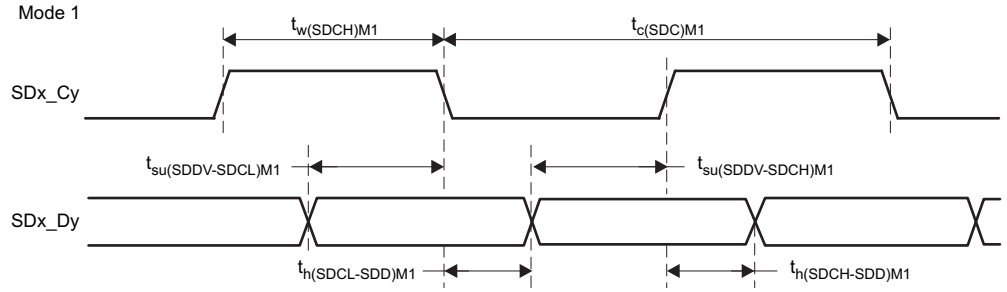


**Figure 5-57. SDFM Timing Diagram – Mode 1**

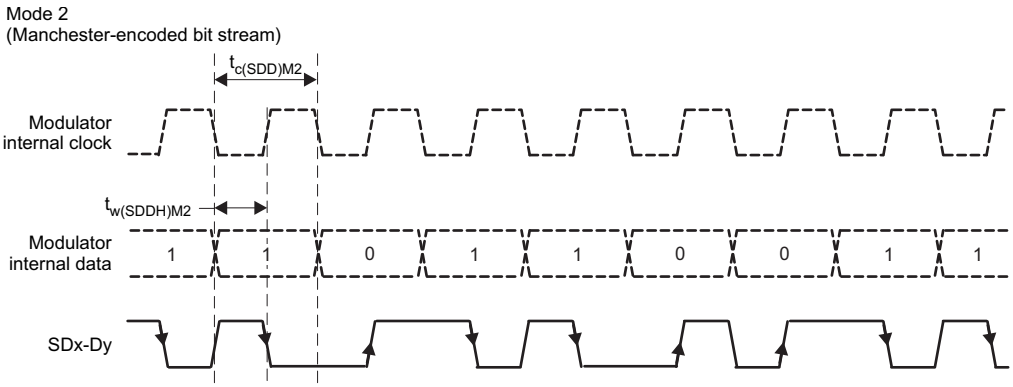


**Figure 5-58. SDFM Timing Diagram – Mode 2**

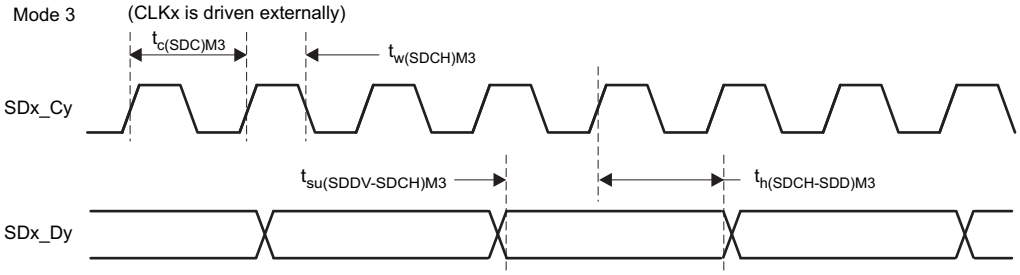


**Figure 5-59. SDFM Timing Diagram – Mode 3**


版权 © 2013–2020, Texas Instruments Incorporated

#### 5.11.5.2 SDFM Electrical Data and Timing (Using 3-Sample GPIO Input Qualification)

SDFM operation with qualified GPIO (3-sample window) is defined by setting GPyQSELn = 0b01. When using this qualified GPIO (3-sample window) mode, the timing requirement for the $t_{w(GPI)}$ pulse duration of $2t_{c(SYSCLK)}$ must be met. It is important for both SD-Cx and SD-Dx pairs to be configured with the same GPIO qualification option. Table 5-68 lists the SDFM timing requirements when using the GPIO input qualification (3-sample window) option. Figure 5-56 through Figure 5-59 show the SDFM timing diagrams.

**Table 5-68. SDFM Timing Requirements When Using GPIO Input Qualification (3-Sample Window(1)) Option**

| | | MIN | MAX | UNIT |
|---|---|---|---|---|
| **Mode 0** | | | | |
| $t_{c(SDC)M0}$ | Cycle time, SDx_Cy | 10 * SYSCLK period | 256 * SYSCLK period | ns |
| $t_{w(SDCHL)M0}$ | Pulse duration, SDx_Cy high/low | 4 * SYSCLK period | 6 * SYSCLK period | ns |
| $t_{w(SDDHL)M0}$ | Pulse duration, SDx_Dy high/low | 4 * SYSCLK period | | ns |
| $t_{su(SDDV-SDCH)M0}$ | Setup time, SDx_Dy valid before SDx_Cy goes high | 2 * SYSCLK period | | ns |
| $t_{h(SDCH-SDD)M0}$ | Hold time, SDx_Dy wait after SDx_Cy goes high | 2 * SYSCLK period | | ns |
| **Mode 1** | | | | |
| $t_{c(SDC)M1}$ | Cycle time, SDx_Cy | 20 * SYSCLK period | 256 * SYSCLK period | ns |
| $t_{w(SDCH)M1}$ | Pulse duration, SDx_Cy high | 4 * SYSCLK period | 6 * SYSCLK period | ns |
| $t_{w(SDDHL)M1}$ | Pulse duration, SDx_Dy high/low | 4 * SYSCLK period | | ns |
| $t_{su(SDDV-SDCL)M1}$ | Setup time, SDx_Dy valid before SDx_Cy goes low | 2 * SYSCLK period | | ns |
| $t_{su(SDDV-SDCH)M1}$ | Setup time, SDx_Dy valid before SDx_Cy goes high | 2 * SYSCLK period | | ns |
| $t_{h(SDCL-SDD)M1}$ | Hold time, SDx_Dy wait after SDx_Cy goes low | 2 * SYSCLK period | | ns |
| $t_{h(SDCH-SDD)M1}$ | Hold time, SDx_Dy wait after SDx_Cy goes high | 2 * SYSCLK period | | ns |
| **Mode 2** | | | | |
| $t_{c(SDD)M2}$ | Cycle time, SDx_Dy | Option unavailable | | |
| $t_{w(SDDH)M2}$ | Pulse duration, SDx_Dy high | | | |
| **Mode 3** | | | | |
| $t_{c(SDC)M3}$ | Cycle time, SDx_Cy | 10 * SYSCLK period | 256 * SYSCLK period | ns |
| $t_{w(SDCHL)M3}$ | Pulse duration, SDx_Cy high | 4 * SYSCLK period | 6 * SYSCLK period | ns |
| $t_{w(SDDHL)M3}$ | Pulse duration, SDx_Dy high/low | 4 * SYSCLK period | | ns |
| $t_{su(SDDV-SDCH)M3}$ | Setup time, SDx_Dy valid before SDx_Cy goes high | 2 * SYSCLK period | | ns |
| $t_{h(SDCH-SDD)M3}$ | Hold time, SDx_Dy wait after SDx_Cy goes high | 2 * SYSCLK period | | ns |

(1) SDFM timing requirements apply only when the GPIO input qualification type is the 3-sample window (GPyQSELx = 1; QUALPRD = 0) option. It is important that both the SD-Cx and SD-Dx pairs be configured with the 3-sample window option.

**NOTE**

The SDFM Qualified GPIO (3-sample) mode provides protection against SDFM module corruption due to occasional random noise glitches on the SDx_Cy pin that may result in a false comparator trip and filter output. For more details, refer to the "SDFM: Use Caution While Using SDFM Under Noisy Conditions" usage note in the *TMS320F2837xD Dual-Core MCUs Silicon Errata*.

The SDFM Qualified GPIO (3-sample) mode does not provide protection against persistent violations of the above timing requirements. Timing violations will result in data corruption proportional to the number of bits which violate the requirements.

## 5.12 Communications Peripherals

注

For the actual number of each peripheral on a specific device, see Table 3-1.

### 5.12.1 Controller Area Network (CAN)

The CAN module performs CAN protocol communication according to ISO 11898-1 (identical to Bosch® CAN protocol specification 2.0 A, B). The bit rate can be programmed to values up to 1 Mbps. A CAN transceiver chip is required for the connection to the physical layer (CAN bus).

For communication on a CAN network, individual message objects can be configured. The message objects and identifier masks are stored in the Message RAM.

All functions concerning the handling of messages are implemented in the message handler. These functions are: acceptance filtering; the transfer of messages between the CAN Core and the Message RAM; and the handling of transmission requests.

The register set of the CAN may be accessed directly by the CPU through the module interface. These registers are used to control and configure the CAN core and the message handler, and to access the message RAM.

The CAN module implements the following features:

- Complies with ISO11898-1 (Bosch® CAN protocol specification 2.0 A and B)
- Bit rates up to 1 Mbps
- Multiple clock sources
- 32 message objects (“message objects” are also referred to as “mailboxes” in this document; the two terms are used interchangeably), each with the following properties:
  - Configurable as receive or transmit
  - Configurable with standard (11-bit) or extended (29-bit) identifier
  - Supports programmable identifier receive mask
  - Supports data and remote frames
  - Holds 0 to 8 bytes of data
  - Parity-checked configuration and data RAM
- Individual identifier mask for each message object
- Programmable FIFO mode for message objects
- Programmable loop-back modes for self-test operation
- Suspend mode for debug support
- Software module reset
- Automatic bus-on, after bus-off state by a programmable 32-bit timer
- Message-RAM parity-check mechanism
- Two interrupt lines

注

For a CAN bit clock of 200 MHz, the smallest bit rate possible is 7.8125 kbps.

注

Depending on the timing settings used, the accuracy of the on-chip zero-pin oscillator (specified in the data manual) may not meet the requirements of the CAN protocol. In this situation, an external clock source must be used.


版权 © 2013–2020, Texas Instruments Incorporated

图 5-60 shows the CAN block diagram.

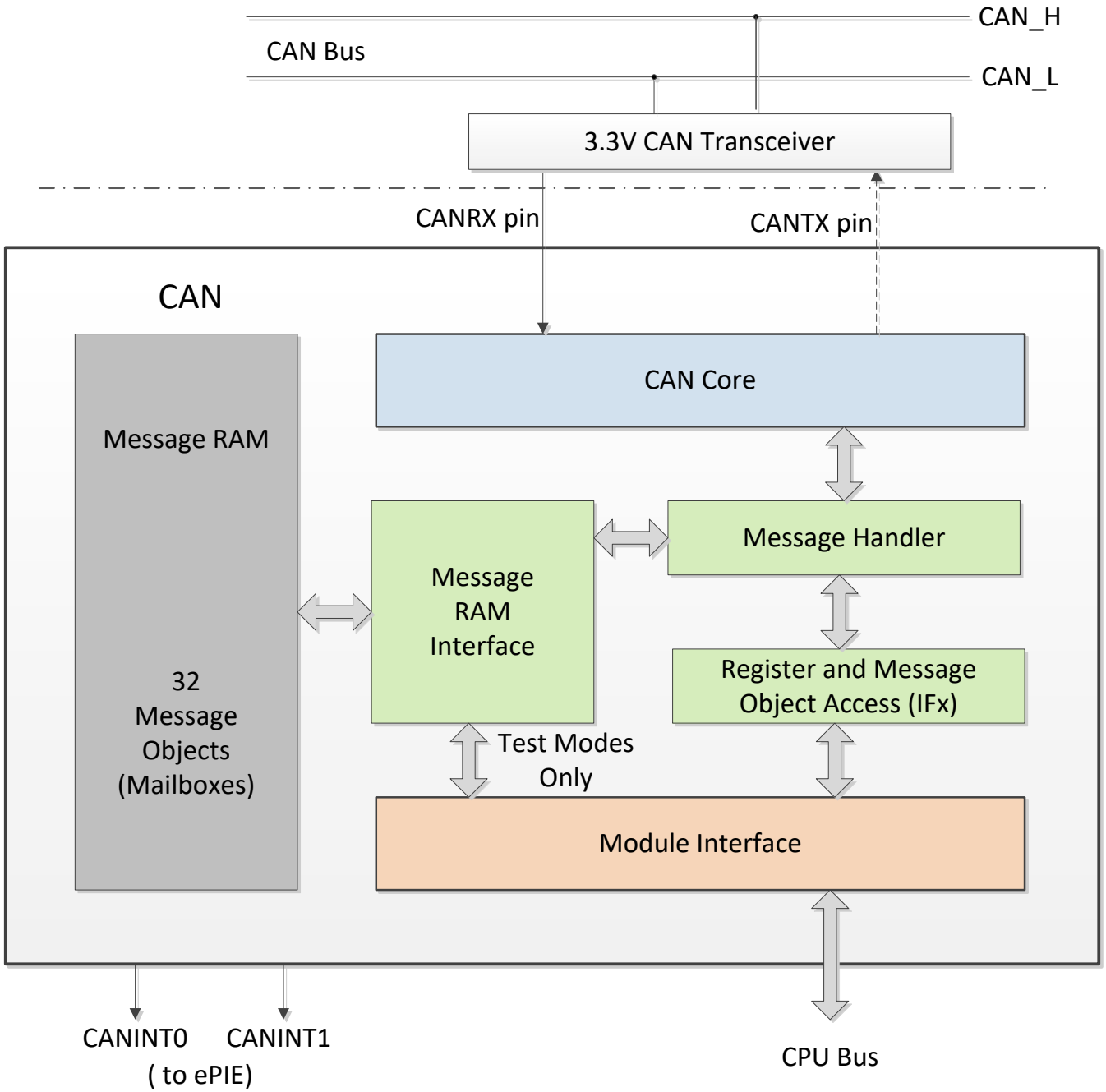


**图 5-60. CAN Block Diagram**

### 5.12.2 Inter-Integrated Circuit (I2C)

The I2C module has the following features:

- Compliance with the Philips Semiconductors $I^2C$-bus specification (version 2.1):
  - Support for 1-bit to 8-bit format transfers
  - 7-bit and 10-bit addressing modes
  - General call
  - START byte mode
  - Support for multiple master-transmitters and slave-receivers
  - Support for multiple slave-transmitters and master-receivers
  - Combined master transmit/receive and receive/transmit mode
  - Data transfer rate of from 10 kbps up to 400 kbps (I2C Fast-mode rate)
- One 16-byte receive FIFO and one 16-byte transmit FIFO
- One interrupt that can be used by the CPU. This interrupt can be generated as a result of one of the following conditions:
  - Transmit-data ready
  - Receive-data ready
  - Register-access ready
  - No-acknowledgment received
  - Arbitration lost
  - Stop condition detected
  - Addressed as slave
- An additional interrupt that can be used by the CPU when in FIFO mode
- Module enable/disable capability
- Free data format mode


版权 © 2013–2020, Texas Instruments Incorporated

图 5-61 shows how the I2C peripheral module interfaces within the device.

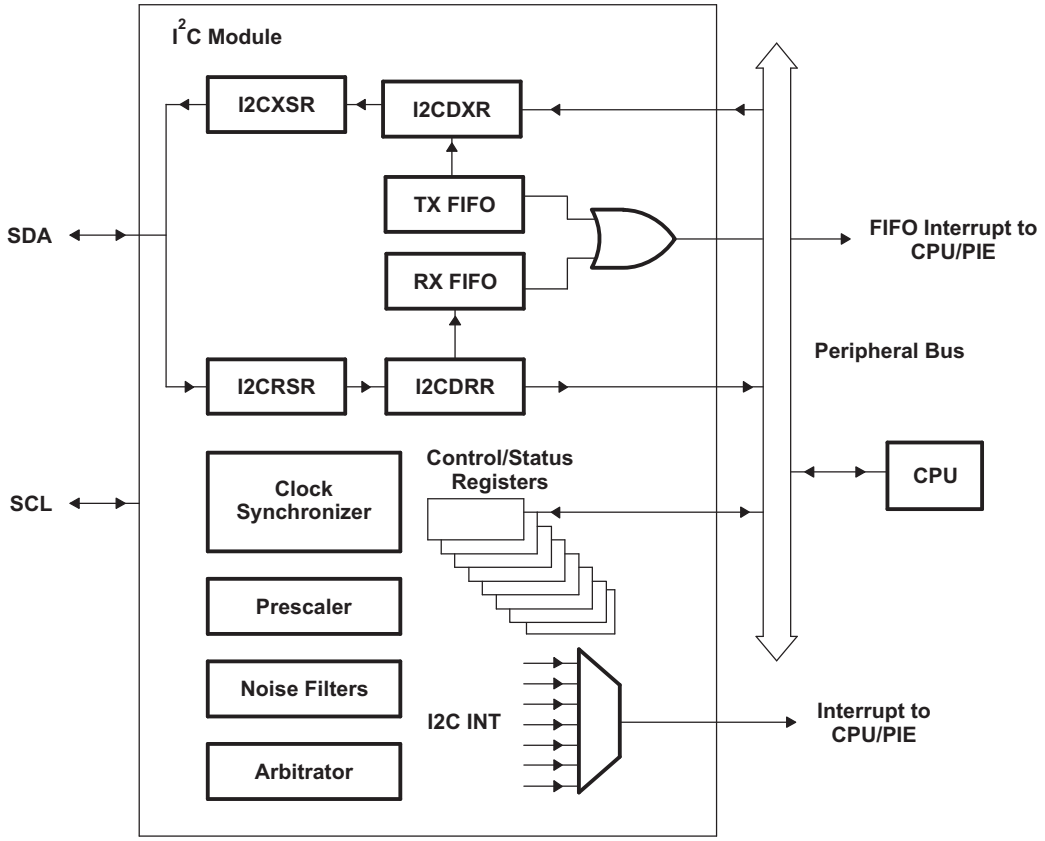


**图 5-61. I2C Peripheral Module Interfaces**

#### 5.12.2.1 I2C Electrical Data and Timing

Table 5-69 shows the I2C timing requirements. Table 5-70 shows the I2C switching characteristics.

**Table 5-69. I2C Timing Requirements**

| | | | MIN | MAX | UNIT |
|---|---|---|---|---|---|
| $t_{h(SDA-SCL)START}$ | Hold time, START condition, SCL fall delay after SDA fall | | 0.6 | | µs |
| $t_{su(SCL-SDA)START}$ | Setup time, Repeated START, SCL rise before SDA fall delay | | 0.6 | | µs |
| $t_{h(SCL-DAT)}$ | Hold time, data after SCL fall | | 0 | | µs |
| $t_{su(DAT-SCL)}$ | Setup time, data before SCL rise | | 100 | | ns |
| $t_{r(SDA)}$ | Rise time, SDA | Input tolerance | 20 | 300 | ns |
| $t_{r(SCL)}$ | Rise time, SCL | Input tolerance | 20 | 300 | ns |
| $t_{f(SDA)}$ | Fall time, SDA | Input tolerance | 11.4 | 300 | ns |
| $t_{f(SCL)}$ | Fall time, SCL | Input tolerance | 11.4 | 300 | ns |
| $t_{su(SCL-SDA)STOP}$ | Setup time, STOP condition, SCL rise before SDA rise delay | | 0.6 | | µs |

**Table 5-70. I2C Switching Characteristics**

over recommended operating conditions (unless otherwise noted)

| PARAMETER | | TEST CONDITIONS | MIN | MAX | UNIT |
|---|---|---|---|---|---|
| $f_{SCL}$ | SCL clock frequency | | 0 | 400 | kHz |
| $t_{w(SCLL)}$ | Pulse duration, SCL clock low | | 1.3 | | µs |
| $t_{w(SCLH)}$ | Pulse duration, SCL clock high | | 0.6 | | µs |
| $t_{w(SP)}$ | Pulse duration of spikes that will be suppressed by the input filter | | 0 | 50 | ns |
| $t_{BUF}$ | Bus free time between STOP and START conditions | | 1.3 | | µs |
| $t_{v(SCL-DAT)}$ | Valid time, data after SCL fall | | | 0.9 | µs |
| $t_{v(SCL-ACK)}$ | Valid time, Acknowledge after SCL fall | | | 0.9 | µs |
| $V_{IL}$ | Valid low-level input voltage | | –0.3 | $0.3 * V_{DDIO}$ | V |
| $V_{IH}$ | Valid high-level input voltage | | $0.7 * V_{DDIO}$ | $V_{DDIO} + 0.3$ | V |
| $V_{OL}$ | Low-level output voltage | Sinking 3 mA | 0 | 0.4 | V |
| $I_I$ | Input current on pins | $0.1\ V_{bus} < V_i < 0.9\ V_{bus}$ | –10 | 10 | µA |

**NOTE**

To meet all of the I2C protocol timing specifications, the I2C module clock must be configured from 7 MHz to 12 MHz.


版权 © 2013–2020, Texas Instruments Incorporated

### 5.12.3 Multichannel Buffered Serial Port (McBSP)

The McBSP module has the following features:

- Compatible with McBSP in TMS320C28x and TMS320F28x DSP devices
- Full-duplex communication
- Double-buffered data registers that allow a continuous data stream
- Independent framing and clocking for receive and transmit
- External shift clock generation or an internal programmable frequency shift clock
- 8-bit data transfer mode can be configured to transmit with LSB or MSB first
- Programmable polarity for both frame synchronization and data clocks
- Highly programmable internal clock and frame generation
- Direct interface to industry-standard CODECs, Analog Interface Chips (AICs), and other serially connected A/D and D/A devices
- Supports AC97, I2S, and SPI protocols
- McBSP clock rate,

$$CLKG = \frac{CLKSRG}{(1 + CLKGDV)}$$

where CLKSRG source could be LSPCLK, CLKX, or CLKR.

图 5-62 shows the block diagram of the McBSP module.

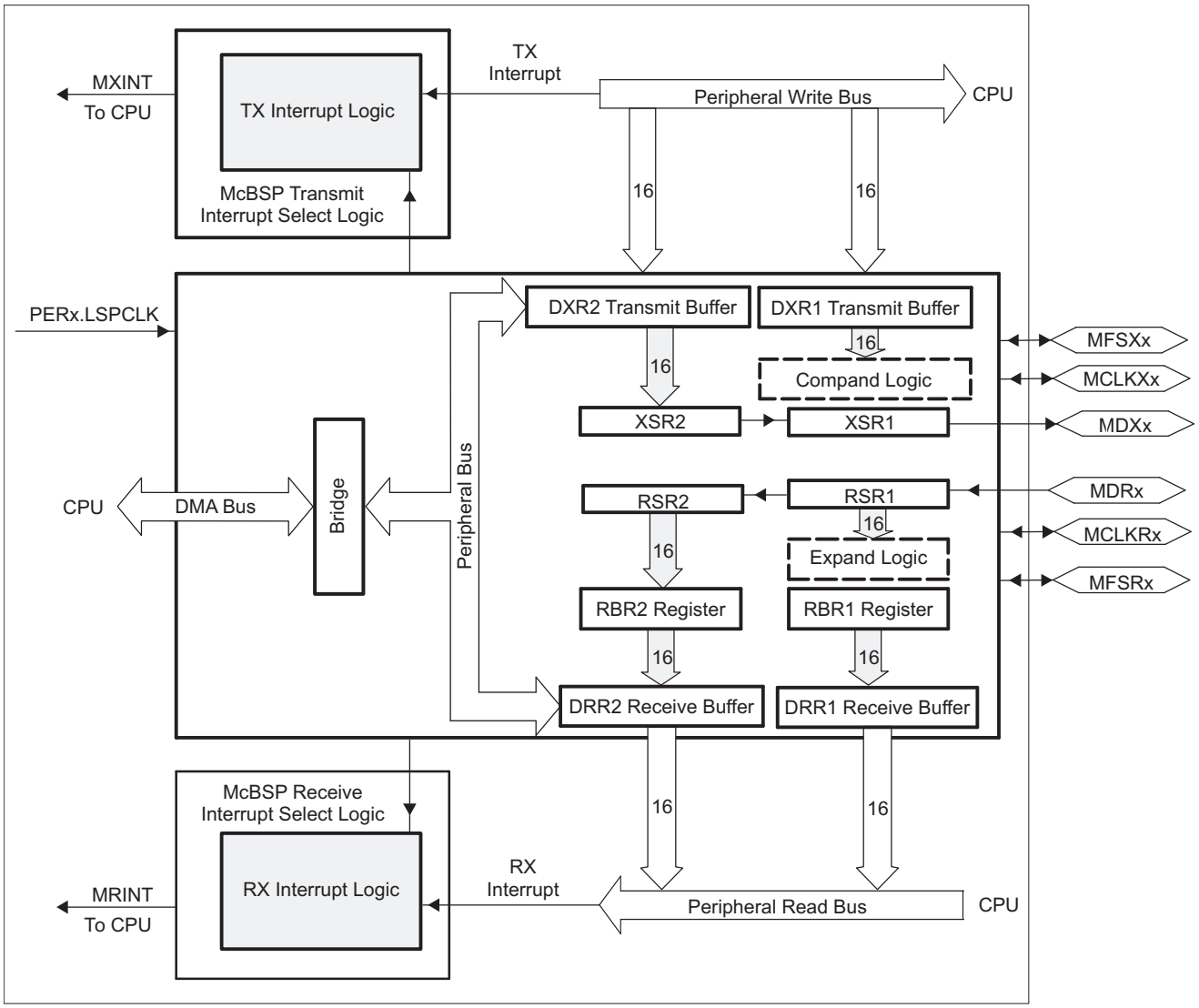


**图 5-62. McBSP Block Diagram**


版权 © 2013–2020, Texas Instruments Incorporated

### 5.12.3.1 McBSP Electrical Data and Timing

#### *5.12.3.1.1 McBSP Transmit and Receive Timing*

Table 5-71 shows the McBSP timing requirements. Table 5-72 shows the McBSP switching characteristics. 图 5-63 and 图 5-64 show the McBSP timing diagrams.

**Table 5-71. McBSP Timing Requirements(1)(2)**

| NO. | | | | MIN | MAX | UNIT |
|---|---|---|---|---|---|---|
| | | McBSP module clock (CLKG, CLKX, CLKR) range | | 1 | | kHz |
| | | | | | 25 | MHz |
| | | McBSP module cycle time (CLKG, CLKX, CLKR) range | | 40 | | ns |
| | | | | | 1 | ms |
| M11 | $t_{c(CKRX)}$ | Cycle time, CLKR/X | CLKR/X ext | 2P | | ns |
| M12 | $t_{w(CKRX)}$ | Pulse duration, CLKR/X high or CLKR/X low | CLKR/X ext | P – 7 | | ns |
| M13 | $t_{r(CKRX)}$ | Rise time, CLKR/X | CLKR/X ext | | 7 | ns |
| M14 | $t_{f(CKRX)}$ | Fall time, CLKR/X | CLKR/X ext | | 7 | ns |
| M15 | $t_{su(FRH-CKRL)}$ | Setup time, external FSR high before CLKR low | CLKR int | 18 | | ns |
| | | | CLKR ext | 2 | | |
| M16 | $t_{h(CKRL-FRH)}$ | Hold time, external FSR high after CLKR low | CLKR int | 0 | | ns |
| | | | CLKR ext | 6 | | |
| M17 | $t_{su(DRV-CKRL)}$ | Setup time, DR valid before CLKR low | CLKR int | 18 | | ns |
| | | | CLKR ext | 5 | | |
| M18 | $t_{h(CKRL-DRV)}$ | Hold time, DR valid after CLKR low | CLKR int | 0 | | ns |
| | | | CLKR ext | 3 | | |
| M19 | $t_{su(FXH-CKXL)}$ | Setup time, external FSX high before CLKX low | CLKX int | 18 | | ns |
| | | | CLKX ext | 2 | | |
| M20 | $t_{h(CKXL-FXH)}$ | Hold time, external FSX high after CLKX low | CLKX int | 0 | | ns |
| | | | CLKX ext | 6 | | |

(1) Polarity bits CLKRP = CLKXP = FSRP = FSXP = 0. If the polarity of any of the signals is inverted, then the timing references of that signal are also inverted.
(2) 2P = 1/CLKG in ns. CLKG is the output of sample rate generator mux. CLKG = CLKSRG / (1 + CLKGDV). CLKSRG can be LSPCLK, CLKX, CLKR as source. CLKSRG ≤ (SYSCLK/2).

### Table 5-72. McBSP Switching Characteristics[(1)(2)]

over recommended operating conditions (unless otherwise noted)

| NO. | PARAMETER | | | | MIN | MAX | UNIT |
|---|---|---|---|---|---|---|---|
| M1 | $t_{c(CKRX)}$ | Cycle time, CLKR/X | | CLKR/X int | 2P | | ns |
| M2 | $t_{w(CKRXH)}$ | Pulse duration, CLKR/X high | | CLKR/X int | D – 5 [(3)] | D + 5 [(3)] | ns |
| M3 | $t_{w(CKRXL)}$ | Pulse duration, CLKR/X low | | CLKR/X int | C – 5 [(3)] | C + 5 [(3)] | ns |
| M4 | $t_{d(CKRH-FRV)}$ | Delay time, CLKR high to internal FSR valid | | CLKR int | -7 | 7.5 | ns |
| | | | | CLKR ext | 3 | 27 | |
| M5 | $t_{d(CKXH-FXV)}$ | Delay time, CLKX high to internal FSX valid | | CLKX int | -5 | 6 | ns |
| | | | | CLKX ext | 3 | 27 | |
| M6 | $t_{dis(CKXH-DXHZ)}$ | Disable time, CLKX high to DX high impedance following last data bit | | CLKX int | –8 | 8 | ns |
| | | | | CLKX ext | 3 | 15 | |
| M7 | $t_{d(CKXH-DXV)}$ | Delay time, CLKX high to DX valid. This applies to all bits except the first bit transmitted. | | CLKX int | –3 | 9 | ns |
| | | | | CLKX ext | 5 | 25 | |
| | | Delay time, CLKX high to DX valid | DXENA = 0 | CLKX int | –3 | 8 | |
| | | | | CLKX ext | 5 | 20 | |
| | | Only applies to first bit transmitted when in Data Delay 1 or 2 (XDATDLY=01b or 10b) modes | DXENA = 1 | CLKX int | P – 3 | P + 8 | |
| | | | | CLKX ext | P + 5 | P + 20 | |
| M8 | $t_{en(CKXH-DX)}$ | Enable time, CLKX high to DX driven | DXENA = 0 | CLKX int | -6 | | ns |
| | | | | CLKX ext | 4 | | |
| | | Only applies to first bit transmitted when in Data Delay 1 or 2 (XDATDLY=01b or 10b) modes | DXENA = 1 | CLKX int | P - 6 | | |
| | | | | CLKX ext | P + 4 | | |
| M9 | $t_{d(FXH-DXV)}$ | Delay time, FSX high to DX valid | DXENA = 0 | FSX int | | 8 | ns |
| | | | | FSX ext | | 17 | |
| | | Only applies to first bit transmitted when in Data Delay 0 (XDATDLY=00b) mode. | DXENA = 1 | FSX int | | P + 8 | |
| | | | | FSX ext | | P + 17 | |
| M10 | $t_{en(FXH-DX)}$ | Enable time, FSX high to DX driven | DXENA = 0 | FSX int | -3 | | ns |
| | | | | FSX ext | 6 | | |
| | | Only applies to first bit transmitted when in Data Delay 0 (XDATDLY=00b) mode | DXENA = 1 | FSX int | P - 3 | | |
| | | | | FSX ext | P + 6 | | |

(1) Polarity bits CLKRP = CLKXP = FSRP = FSXP = 0. If the polarity of any of the signals is inverted, then the timing references of that signal are also inverted.
(2) 2P = 1/CLKG in ns.
(3) C = CLKRX low pulse width = P
D = CLKRX high pulse width = P


版权 © 2013–2020, Texas Instruments Incorporated

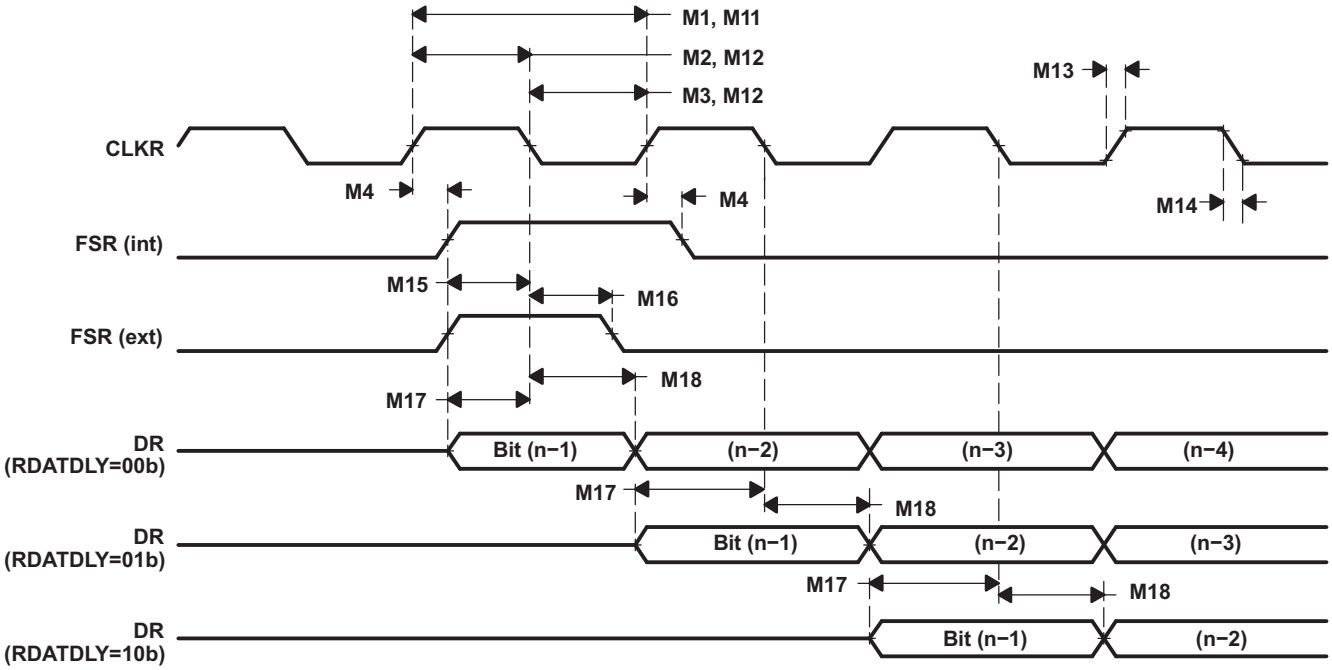


图 5-63. McBSP Receive Timing

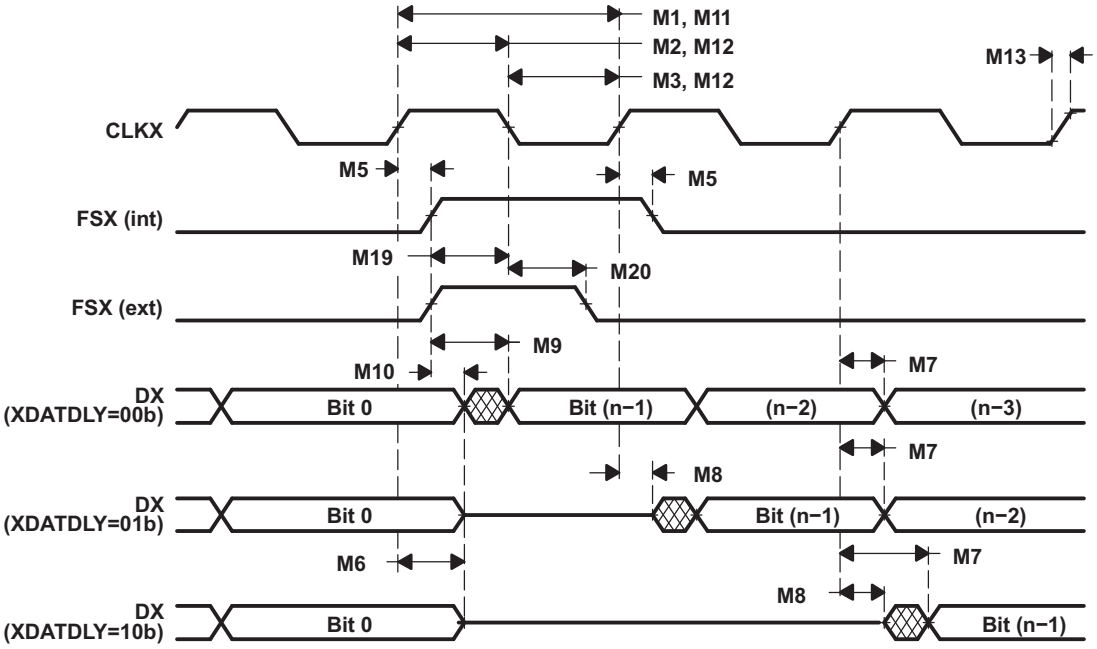


图 5-64. McBSP Transmit Timing

#### 5.12.3.1.2 McBSP as SPI Master or Slave Timing

Table 5-73 lists the McBSP as SPI master timing requirements. Table 5-74 lists the McBSP as SPI master switching characteristics. Table 5-75 lists the McBSP as SPI slave timing requirements. Table 5-76 lists the McBSP as SPI slave switching characteristics.

图 5-65 through 图 5-68 show the McBSP as SPI master or slave timing diagrams.

**Table 5-73. McBSP as SPI Master Timing Requirements**

| NO. | | | MIN | MAX | UNIT |
|---|---|---|---|---|---|
| **CLOCK** | | | | | |
| | $t_{c(CLKG)}$ | Cycle time, CLKG (1) | 2 * $t_{c(LSPCLK)}$ | | ns |
| | P | Cycle time, LSPCLK (1) | $t_{c(LSPCLK)}$ | | ns |
| M33, M42, M52, M61 | $t_{c(CKX)}$ | Cycle time, CLKX | 2P | | ns |
| **CLKSTP = 10b, CLKXP = 0** | | | | | |
| M30 | $t_{su(DRV-CKXL)}$ | Setup time, DR valid before CLKX low | 30 | | ns |
| M31 | $t_{h(CKXL-DRV)}$ | Hold time, DR valid after CLKX low | 1 | | ns |
| **CLKSTP = 11b, CLKXP = 0** | | | | | |
| M39 | $t_{su(DRV-CKXH)}$ | Setup time, DR valid before CLKX high | 30 | | ns |
| M40 | $t_{h(CKXH-DRV)}$ | Hold time, DR valid after CLKX high | 1 | | ns |
| **CLKSTP = 10b, CLKXP = 1** | | | | | |
| M49 | $t_{su(DRV-CKXH)}$ | Setup time, DR valid before CLKX high | 30 | | ns |
| M50 | $t_{h(CKXH-DRV)}$ | Hold time, DR valid after CLKX high | 1 | | ns |
| **CLKSTP = 11b, CLKXP = 1** | | | | | |
| M58 | $t_{su(DRV-CKXL)}$ | Setup time, DR valid before CLKX low | 30 | | ns |
| M59 | $t_{h(CKXL-DRV)}$ | Hold time, DR valid after CLKX low | 1 | | ns |

(1) CLKG should be configured to LSPCLK/2 by setting CLKSM = 1 and CLKGDV = 1


版权 © 2013–2020, Texas Instruments Incorporated

### Table 5-74. McBSP as SPI Master Switching Characteristics

over operating free-air temperature range (unless otherwise noted)

| NO. | PARAMETER | | MIN | TYP | MAX | UNIT |
|---|---|---|---|---|---|---|
| **CLOCK** | | | | | | |
| M33 | $t_{c(CLKG)}$ | Cycle time, CLKG[1] (n * $t_{c(LSPCLK)}$) | 40 | | | ns |
| | P | Half CLKG cycle; 0.5 * $t_{c(CLKG)}$ | 20 | | | ns |
| | n | LSPCLK to CLKG divider | 2 | | | ns |
| **CLKSTP = 10b, CLKXP = 0** | | | | | | |
| M24 | $t_{h(CKXL-FXL)}$ | Hold time, FSX high after CLKX low | 2P – 6 | | | ns |
| M25 | $t_{d(FXL-CKXH)}$ | Delay time, FSX low to CLKX high | P – 6 | | | ns |
| M26 | $t_{d(CLKXH-DXV)}$ | Delay time, CLKX high to DX valid [check clock polarity and add to timing diagram] | –4 | | 6 | ns |
| M28 | $t_{dis(FXH-DXHZ)}$ | Disable time, DX high impedance following last data bit from CLKX low [redefine timing diagram] | P – 8 | | | ns |
| M29 | $t_{d(FXL-DXV)}$ | Delay time, FSX low to DX valid | P – 3 | | P + 6 | ns |
| **CLKSTP = 11b, CLKXP = 0** | | | | | | |
| M34 | $t_{h(CKXL-FXH)}$ | Hold time, FSX high after CLKX low | P – 6 | | | ns |
| M35 | $t_{d(FXL-CKXH)}$ | Delay time, FSX low to CLKX high | P – 6 | | | ns |
| M36 | $t_{d(CLKXL-DXV)}$ | Delay time, CLKX low to DX valid [check clock polarity and add to timing diagram] | –4 | | 6 | ns |
| M37 | $t_{dis(CKXL-DXHZ)}$ | Disable time, DX high impedance following last data bit from CLKX low | P – 6 | | | ns |
| M38 | $t_{d(FXL-DXV)}$ | Delay time, FSX low to DX valid | –2 | | 1 | ns |
| **CLKSTP = 10b, CLKXP = 1** | | | | | | |
| M43 | $t_{h(CKXH-FXH)}$ | Hold time, FSX high after CLKX high | 2P – 6 | | | ns |
| M44 | $t_{d(FXL-CKXL)}$ | Delay time, FSX low to CLKX low | P – 6 | | | ns |
| M45 | $t_{d(CLKXL-DXV)}$ | Delay time, CLKX low to DX valid [check clock polarity and add to timing diagram] | –4 | | 6 | ns |
| M47 | $t_{dis(FXH-DXHZ)}$ | Disable time, DX high impedance following last data bit from CLKX low [redefine timing diagram] | P – 6 | | | ns |
| M48 | $t_{d(FXL-DXV)}$ | Delay time, FSX low to DX valid | –2 | | 1 | ns |
| **CLKSTP = 11b, CLKXP = 1** | | | | | | |
| M53 | $t_{h(CKXH-FXH)}$ | Hold time, FSX high after CLKX high | P – 6 | | | ns |
| M54 | $t_{d(FXL-CKXL)}$ | Delay time, FSX low to CLKX low | 2P – 6 | | | ns |
| M55 | $t_{d(CLKXH-DXV)}$ | Delay time, CLKX high to DX valid | –4 | | 6 | ns |
| M56 | $t_{dis(CKXH-DXHZ)}$ | Disable time, DX high impedance following last data bit from CLKX high | P – 8 | | | ns |
| M57 | $t_{d(FXL-DXV)}$ | Delay time, FSX low to DX valid | –2 | | 1 | ns |

(1) CLKG should be configured to LSPCLK/2 by setting CLKSM = 1 and CLKGDV = 1.

### Table 5-75. McBSP as SPI Slave Timing Requirements

| NO. | | | MIN | MAX | UNIT |
|---|---|---|---|---|---|
| **CLOCK** | | | | | |
| | $t_{c(CLKG)}$ | Cycle time, CLKG[1] | 2 * $t_{c(LSPCLK)}$ | | ns |
| | P | Cycle time, LSPCLK[1] | $t_{c(LSPCLK)}$ | | ns |
| M33, M42, M52, M61 | $t_{c(CKX)}$ | Cycle time, CLKX[2] | 16P | | ns |
| na | $t_{skew(CKX-Data)}$ | Worst skew between Clock and Data to ensure GBD for sampled clock and datas | | | ns |
| **CLKSTP = 10b, CLKXP = 0** | | | | | |
| M30 | $t_{su(DRV-CKXL)}$ | Setup time, DR valid before CLKX low | 8P – 10 | | ns |
| M31 | $t_{h(CKXL-DRV)}$ | Hold time, DR valid after CLKX low | 8P – 10 | | ns |
| M32 | $t_{su(BFXL-CKXH)}$ | Setup time, FSX low before CLKX high | 8P+10 | | ns |
| **CLKSTP = 11b, CLKXP = 0** | | | | | |
| M39 | $t_{su(DRV-CKXH)}$ | Setup time, DR valid before CLKX high | 8P – 10 | | ns |
| M40 | $t_{h(CKXH-DRV)}$ | Hold time, DR valid after CLKX high | 8P – 10 | | ns |
| M41 | $t_{su(FXL-CKXH)}$ | Setup time, FSX low before CLKX high | 16P+10 | | ns |
| **CLKSTP = 10b, CLKXP = 1** | | | | | |
| M49 | $t_{su(DRV-CKXH)}$ | Setup time, DR valid before CLKX high | 8P – 10 | | ns |
| M50 | $t_{h(CKXH-DRV)}$ | Hold time, DR valid after CLKX high | 8P – 10 | | ns |
| M51 | $t_{su(FXL-CKXL)}$ | Setup time, FSX low before CLKX low | 8P+10 | | ns |
| **CLKSTP = 11b, CLKXP = 1** | | | | | |
| M58 | $t_{su(DRV-CKXL)}$ | Setup time, DR valid before CLKX low | 8P – 10 | | ns |
| M59 | $t_{h(CKXL-DRV)}$ | Hold time, DR valid after CLKX low | 8P – 10 | | ns |
| M60 | $t_{su(FXL-CKXL)}$ | Setup time, FSX low before CLKX low | 16P+10 | | ns |

(1) CLKG should be configured to LSPCLK/2 by setting CLKSM = 1 and CLKGDV = 1
(2) For SPI slave modes CLKX must be a minimum of 8 CLKG cycles


版权 © 2013–2020, Texas Instruments Incorporated

### Table 5-76. McBSP as SPI Slave Switching Characteristics

over operating free-air temperature range (unless otherwise noted)

| NO. | PARAMETER | | MIN | TYP | MAX | UNIT |
|---|---|---|---|---|---|---|
| **CLOCK** | | | | | | |
| | 2P | Cycle time, CLKG | | | | ns |
| **CLKSTP = 10b, CLKXP = 0** | | | | | | |
| M26 | $t_{d(CLKXH-DXV)}$ | Delay time, CLKX high to DX valid | 3P + 6 | | 5P + 20 | ns |
| M28 | $t_{dis(FXH-DXHZ)}$ | Disable time, DX high impedance following last data bit from FSX high | 6P + 6 | | | ns |
| M29 | $t_{d(FXL-DXV)}$ | Delay time, FSX low to DX valid | 4P + 6 | | | ns |
| **CLKSTP = 11b, CLKXP = 0** | | | | | | |
| M36 | $t_{d(CLKXL-DXV)}$ | Delay time, CLKX low to DX valid | 3P + 6 | | 5P + 20 | ns |
| M37 | $t_{dis(CKXL-DXHZ)}$ | Disable time, DX high impedance following last data bit from CLKX low | 7P + 6 | | | ns |
| M38 | $t_{d(FXL-DXV)}$ | Delay time, FSX low to DX valid | 4P + 6 | | | ns |
| **CLKSTP = 10b, CLKXP = 1** | | | | | | |
| M45 | $t_{d(CLKXL-DXV)}$ | Delay time, CLKX low to DX valid | 3P + 6 | | 5P + 20 | ns |
| M47 | $t_{dis(FXH-DXHZ)}$ | Disable time, DX high impedance following last data bit from FSX high | 6P + 6 | | | ns |
| M48 | $t_{d(FXL-DXV)}$ | Delay time, FSX low to DX valid | 4P + 6 | | | ns |
| **CLKSTP = 11b, CLKXP = 1** | | | | | | |
| M55 | $t_{d(CLKXH-DXV)}$ | Delay time, CLKX high to DX valid | 3P + 6 | | 5P + 20 | ns |
| M56 | $t_{dis(CKXH-DXHZ)}$ | Disable time, DX high impedance following last data bit from CLKX high | 7P + 6 | | | ns |
| M57 | $t_{d(FXL-DXV)}$ | Delay time, FSX low to DX valid | 4P + 6 | | | ns |

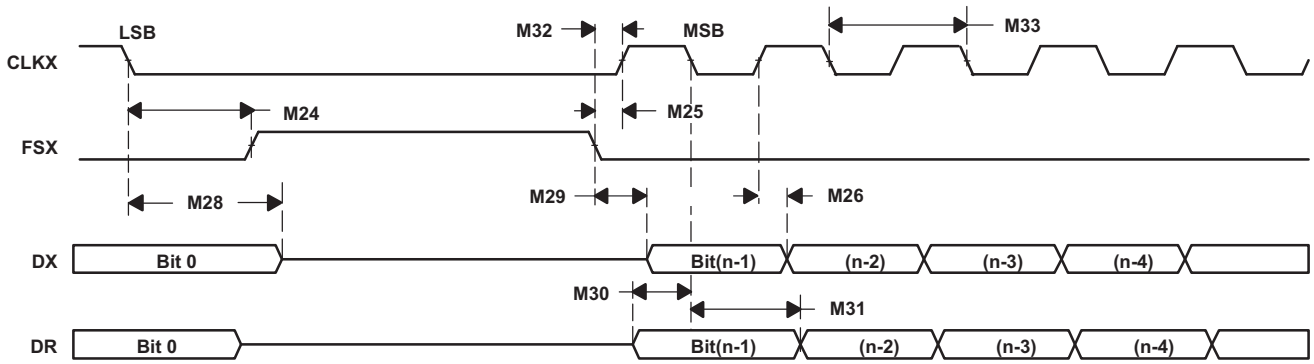


**图 5-65. McBSP Timing as SPI Master or Slave: CLKSTP = 10b, CLKXP = 0**

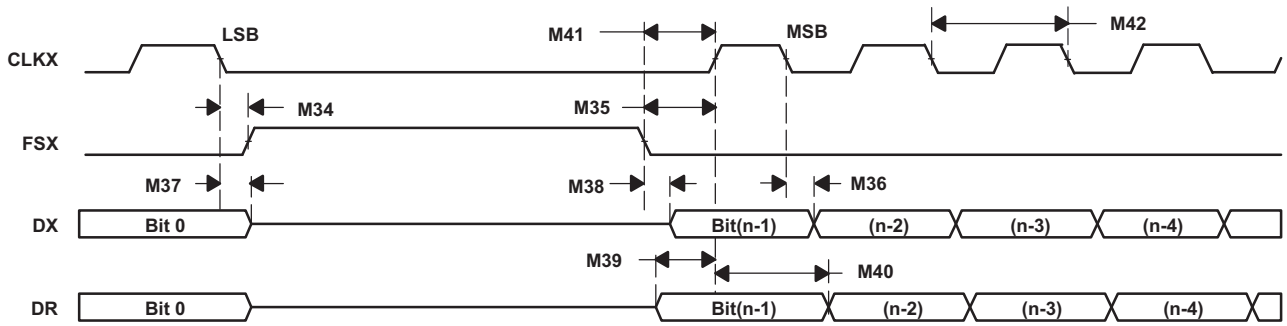


**图 5-66. McBSP Timing as SPI Master or Slave: CLKSTP = 11b, CLKXP = 0**

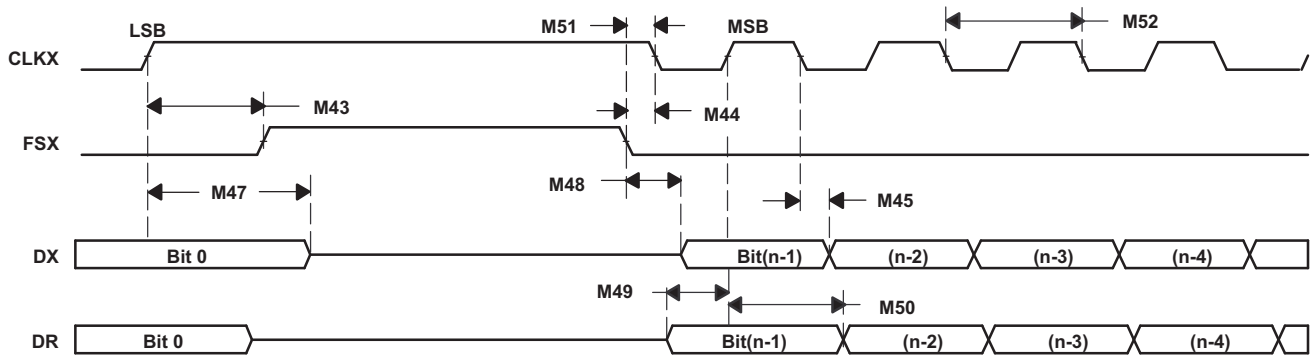


**图 5-67. McBSP Timing as SPI Master or Slave: CLKSTP = 10b, CLKXP = 1**

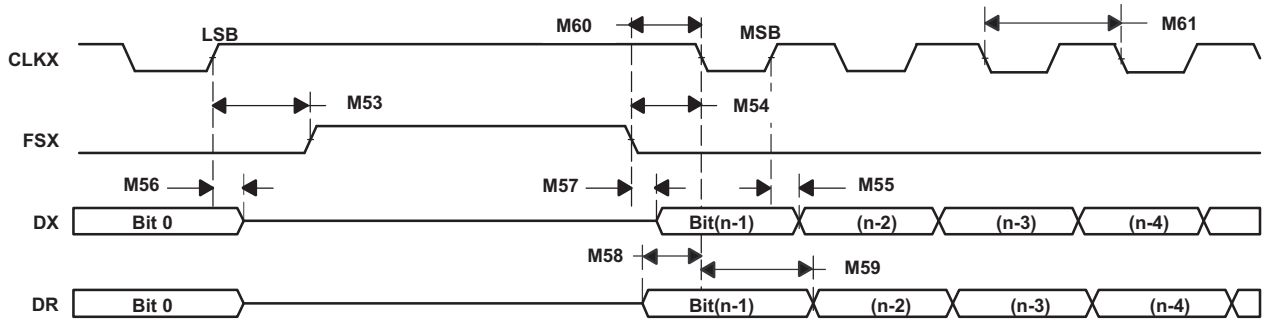


**图 5-68. McBSP Timing as SPI Master or Slave: CLKSTP = 11b, CLKXP = 1**


版权 © 2013–2020, Texas Instruments Incorporated

### 5.12.4 Serial Communications Interface (SCI)

The SCI is a 2-wire asynchronous serial port, commonly known as a UART. The SCI module supports digital communications between the CPU and other asynchronous peripherals that use the standard non-return-to-zero (NRZ) format

The SCI receiver and transmitter each have a 16-level-deep FIFO for reducing servicing overhead, and each has its own separate enable and interrupt bits. Both can be operated independently for half-duplex communication, or simultaneously for full-duplex communication. To specify data integrity, the SCI checks received data for break detection, parity, overrun, and framing errors. The bit rate is programmable to different speeds through a 16-bit baud-select register. 图 5-69 shows the SCI block diagram.

Features of the SCI module include:

- Two external pins:
  - SCITXD: SCI transmit-output pin
  - SCIRXD: SCI receive-input pin

    **NOTE:** Both pins can be used as GPIO if not used for SCI.
  - Baud rate programmable to 64K different rates
- Data-word format
  - One start bit
  - Data-word length programmable from 1 to 8 bits
  - Optional even/odd/no parity bit
  - 1 or 2 stop bits
- Four error-detection flags: parity, overrun, framing, and break detection
- Two wakeup multiprocessor modes: idle-line and address bit
- Half- or full-duplex operation
- Double-buffered receive and transmit functions
- Transmitter and receiver operations can be accomplished through interrupt-driven or polled algorithms with status flags.
  - Transmitter: TXRDY flag (transmitter-buffer register is ready to receive another character) and TX EMPTY flag (transmitter-shift register is empty)
  - Receiver: RXRDY flag (receiver-buffer register is ready to receive another character), BRKDT flag (break condition occurred), and RX ERROR flag (monitoring four interrupt conditions)
- Separate enable bits for transmitter and receiver interrupts (except BRKDT)
- NRZ format
- Auto baud-detect hardware logic
- 16-level transmit and receive FIFO

---

**注**

All registers in this module are 8-bit registers. When a register is accessed, the register data is in the lower byte (bits 7–0), and the upper byte (bits 15–8) is read as zeros. Writing to the upper byte has no effect.

---

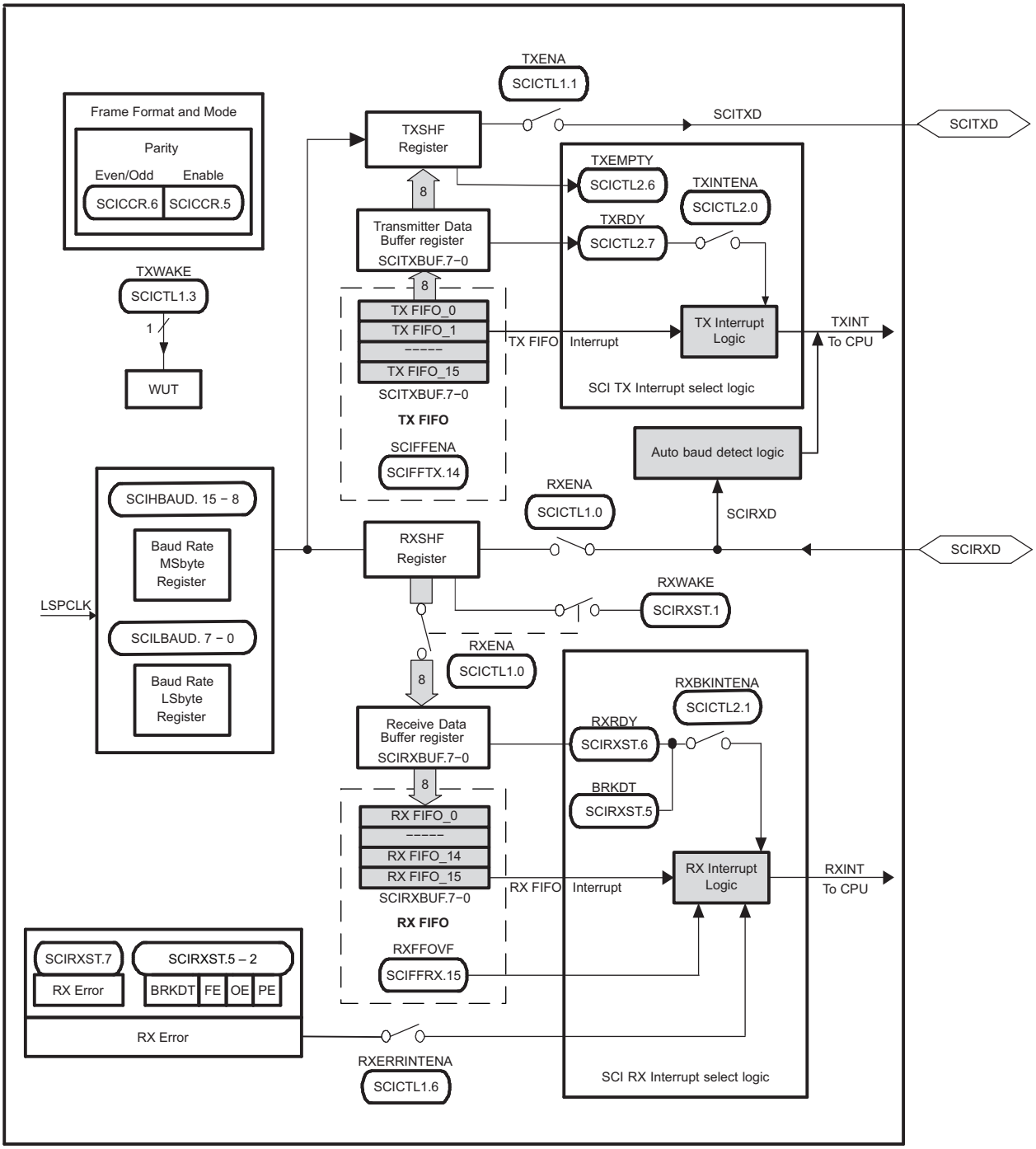


**图 5-69. SCI Block Diagram**


版权 © 2013–2020, Texas Instruments Incorporated

The major elements used in full-duplex operation include:

- A transmitter (TX) and its major registers:
  - SCITXBUF register – Transmitter Data Buffer register. Contains data (loaded by the CPU) to be transmitted
  - TXSHF register – Transmitter Shift register. Accepts data from the SCITXBUF register and shifts data onto the SCITXD pin, 1 bit at a time
- A receiver (RX) and its major registers:
  - RXSHF register – Receiver Shift register. Shifts data in from the SCIRXD pin, 1 bit at a time
  - SCIRXBUF register – Receiver Data Buffer register. Contains data to be read by the CPU. Data from a remote processor is loaded into the RXSHF register and then into the SCIRXBUF and SCIRXEMU registers
- A programmable baud generator
- Data-memory-mapped control and status registers enable the CPU to access the I2C module registers and FIFOs.

The SCI receiver and transmitter operate independently.

### 5.12.5 Serial Peripheral Interface (SPI)

The SPI is a high-speed synchronous serial input/output (I/O) port that allows a serial bit stream of programmed length (1 to 16 bits) to be shifted into and out of the device at a programmed bit-transfer rate. The SPI is normally used for communications between the microcontroller and external peripherals or another controller. Typical applications include external I/O or peripheral expansion through devices such as shift registers, display drivers, and ADCs. Multidevice communications are supported by the master/slave operation of the SPI. The port supports 16-level receive and transmit FIFOs for reducing CPU servicing overhead.

The SPI module features include:

- SPISOMI: SPI slave-output/master-input pin
- SPISIMO: SPI slave-input/master-output pin
- $\overline{\text{SPISTE}}$: SPI slave transmit-enable pin
- SPICLK: SPI serial-clock pin
- Two operational modes: master and slave
- Baud rate: 125 different programmable rates
- Data word length: 1 to 16 data bits
- Four clocking schemes (controlled by clock polarity and clock phase bits) include:
  - Falling edge without phase delay: SPICLK active-high. SPI transmits data on the falling edge of the SPICLK signal and receives data on the rising edge of the SPICLK signal.
  - Falling edge with phase delay: SPICLK active-high. SPI transmits data one half-cycle ahead of the falling edge of the SPICLK signal and receives data on the falling edge of the SPICLK signal.
  - Rising edge without phase delay: SPICLK inactive-low. SPI transmits data on the rising edge of the SPICLK signal and receives data on the falling edge of the SPICLK signal.
  - Rising edge with phase delay: SPICLK inactive-low. SPI transmits data one half-cycle ahead of the rising edge of the SPICLK signal and receives data on the rising edge of the SPICLK signal.
- Simultaneous receive-and-transmit operation (transmit function can be disabled in software)
- Transmitter and receiver operations are accomplished through either interrupt-driven or polled algorithms.
- 16-level transmit and receive FIFO
- Delayed transmit control
- 3-wire SPI mode
- $\overline{\text{SPISTE}}$ inversion for digital audio interface receive mode on devices with two SPI modules
- DMA support
- High-speed mode for up to 50-MHz full-duplex communication


版权 © 2013–2020, Texas Instruments Incorporated

The SPI operates in master or slave mode. The master initiates data transfer by sending the SPICLK signal. For both the slave and the master, data is shifted out of the shift registers on one edge of the SPICLK and latched into the shift register on the opposite SPICLK clock edge. If the CLOCK PHASE bit (SPICTL.3) is high, data is transmitted and received a half-cycle before the SPICLK transition. As a result, both controllers send and receive data simultaneously. The application software determines whether the data is meaningful or dummy data. There are three possible methods for data transmission:

- Master sends data; slave sends dummy data
- Master sends data; slave sends data
- Master sends dummy data; slave sends data

The master can initiate a data transfer at any time because it controls the SPICLK signal. The software, however, determines how the master detects when the slave is ready to broadcast data.

图 5-70 shows the SPI CPU Interface.

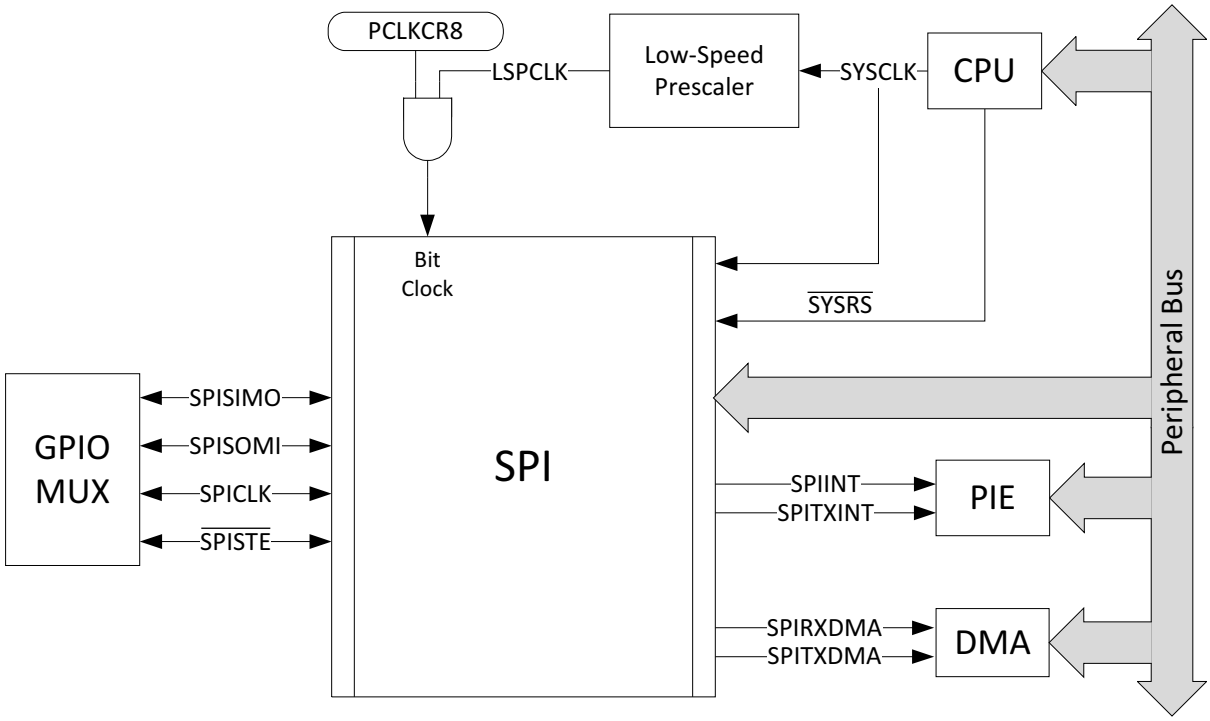


**图 5-70. SPI CPU Interface**

#### 5.12.5.1 SPI Electrical Data and Timing

**注**

All timing parameters for SPI High-Speed Mode assume a load capacitance of 5 pF on SPICLK, SPISIMO, and SPISOMI.

For more information about the SPI in High-Speed mode, see the Serial Peripheral Interface (SPI) chapter of the *TMS320F2837xD Dual-Core Microcontrollers Technical Reference Manual*.

To use the SPI in High-Speed mode, the application must use the high-speed enabled GPIOs (see Section 4.4.5).

##### *5.12.5.1.1 SPI Master Mode Timings*

Table 5-77 lists the SPI master mode timing requirements. Table 5-78 lists the SPI master mode switching characteristics (clock phase = 0). Table 5-79 lists the SPI master mode switching characteristics (clock phase = 1). 图 5-71 shows the SPI master mode external timing where the clock phase = 0. 图 5-72 shows the SPI master mode external timing where the clock phase = 1.

**Table 5-77. SPI Master Mode Timing Requirements**

| NO. | | | (BRR + 1) CONDITION (1) | MIN | MAX | UNIT |
|---|---|---|---|---|---|---|
| **High Speed Mode** | | | | | | |
| 8 | $t_{su(SOMI)M}$ | Setup time, SPISOMI valid before SPICLK | Even, Odd | 1 | | ns |
| 9 | $t_{h(SOMI)M}$ | Hold time, SPISOMI valid after SPICLK | Even, Odd | 5 | | ns |
| **Normal Mode** | | | | | | |
| 8 | $t_{su(SOMI)M}$ | Setup time, SPISOMI valid before SPICLK | Even, Odd | 20 | | ns |
| 9 | $t_{h(SOMI)M}$ | Hold time, SPISOMI valid after SPICLK | Even, Odd | 0 | | ns |

(1) The (BRR + 1) condition is Even when (SPIBRR + 1) is even or SPIBRR is 0 or 2. It is Odd when (SPIBRR + 1) is odd and SPIBRR is greater than 3.


版权 © 2013–2020, Texas Instruments Incorporated

### Table 5-78. SPI Master Mode Switching Characteristics (Clock Phase = 0)

over recommended operating conditions (unless otherwise noted)

| NO. | PARAMETER | | (BRR + 1) CONDITION(1) | MIN | MAX | UNIT |
|---|---|---|---|---|---|---|
| **General** | | | | | | |
| 1 | $t_{c(SPC)M}$ | Cycle time, SPICLK | Even | $4t_{c(LSPCLK)}$ | $128t_{c(LSPCLK)}$ | ns |
| | | | Odd | $5t_{c(LSPCLK)}$ | $127t_{c(LSPCLK)}$ | |
| 2 | $t_{w(SPC1)M}$ | Pulse duration, SPICLK, first pulse | Even | $0.5t_{c(SPC)M} – 1$ | $0.5t_{c(SPC)M} + 1$ | ns |
| | | | Odd | $0.5t_{c(SPC)M} + 0.5t_{c(LSPCLK)} – 1$ | $0.5t_{c(SPC)M} + 0.5t_{c(LSPCLK)} + 1$ | |
| 3 | $t_{w(SPC2)M}$ | Pulse duration, SPICLK, second pulse | Even | $0.5t_{c(SPC)M} – 1$ | $0.5t_{c(SPC)M} + 1$ | ns |
| | | | Odd | $0.5t_{c(SPC)M} – 0.5t_{c(LSPCLK)} – 1$ | $0.5t_{c(SPC)M} – 0.5t_{c(LSPCLK)} + 1$ | |
| 23 | $t_{d(SPC)M}$ | Delay time, $\overline{SPISTE}$ active to SPICLK | Even | $1.5t_{c(SPC)M} - 3t_{c(SYSCLK)} – 7$ | $1.5t_{c(SPC)M} - 3t_{c(SYSCLK)} + 5$ | ns |
| | | | Odd | $1.5t_{c(SPC)M} - 4t_{c(SYSCLK)} – 7$ | $1.5t_{c(SPC)M} - 4t_{c(SYSCLK)} + 5$ | |
| 24 | $t_{v(STE)M}$ | Valid time, SPICLK to $\overline{SPISTE}$ inactive | Even | $0.5t_{c(SPC)M} – 7$ | $0.5t_{c(SPC)M} + 5$ | ns |
| | | | Odd | $0.5t_{c(SPC)M} – 0.5t_{c(LSPCLK)} – 7$ | $0.5t_{c(SPC)M} – 0.5t_{c(LSPCLK)} + 5$ | |
| **High Speed Mode** | | | | | | |
| 4 | $t_{d(SIMO)M}$ | Delay time, SPICLK to SPISIMO valid | Even, Odd | | 1 | ns |
| 5 | $t_{v(SIMO)M}$ | Valid time, SPISIMO valid after SPICLK | Even | $0.5t_{c(SPC)M} – 2$ | | ns |
| | | | Odd | $0.5t_{c(SPC)M} – 0.5t_{c(LSPCLK)} – 2$ | | |
| **Normal Mode** | | | | | | |
| 4 | $t_{d(SIMO)M}$ | Delay time, SPICLK to SPISIMO valid | Even, Odd | | 6 | ns |
| 5 | $t_{v(SIMO)M}$ | Valid time, SPISIMO valid after SPICLK | Even | $0.5t_{c(SPC)M} – 5$ | | ns |
| | | | Odd | $0.5t_{c(SPC)M} – 0.5t_{c(LSPCLK)} – 5$ | | |

(1) The (BRR + 1) condition is Even when (SPIBRR + 1) is even or SPIBRR is 0 or 2. It is Odd when (SPIBRR + 1) is odd and SPIBRR is greater than 3.

### Table 5-79. SPI Master Mode Switching Characteristics (Clock Phase = 1)

over recommended operating conditions (unless otherwise noted)

| NO. | PARAMETER | | (BRR + 1) CONDITION (1) | MIN | MAX | UNIT |
|---|---|---|---|---|---|---|
| **General** | | | | | | |
| 1 | $t_{c(SPC)M}$ | Cycle time, SPICLK | Even | $4t_{c(LSPCLK)}$ | $128t_{c(LSPCLK)}$ | ns |
| | | | Odd | $5t_{c(LSPCLK)}$ | $127t_{c(LSPCLK)}$ | |
| 2 | $t_{w(SPCH)M}$ | Pulse duration, SPICLK, first pulse | Even | $0.5t_{c(SPC)M} – 1$ | $0.5t_{c(SPC)M} + 1$ | ns |
| | | | Odd | $0.5t_{c(SPC)M} – 0.5t_{c(LSPCLK)} – 1$ | $0.5t_{c(SPC)M} – 0.5t_{c(LSPCLK)} + 1$ | |
| 3 | $t_{w(SPC2)M}$ | Pulse duration, SPICLK, second pulse | Even | $0.5t_{c(SPC)M} – 1$ | $0.5t_{c(SPC)M} + 1$ | ns |
| | | | Odd | $0.5t_{c(SPC)M} + 0.5t_{c(LSPCLK)} – 1$ | $0.5t_{c(SPC)M} + 0.5t_{c(LSPCLK)} + 1$ | |
| 23 | $t_{d(SPC)M}$ | Delay time, $\overline{SPISTE}$ valid to SPICLK | Even, Odd | 2tc(SPC)M – 3tc(SYSCLK) – 7 | 2tc(SPC)M – 3tc(SYSCLK) + 5 | ns |
| 24 | $t_{v(STE)M}$ | Valid time, SPICLK to $\overline{SPISTE}$ invalid | Even | – 7 | +5 | ns |
| | | | Odd | – 7 | +5 | |
| **High Speed Mode** | | | | | | |
| 4 | $t_{d(SIMO)M}$ | Delay time, SPISIMO valid to SPICLK | Even | $0.5t_{c(SPC)M} – 1$ | | ns |
| | | | Odd | $0.5t_{c(SPC)M} + 0.5t_{c(LSPCLK)} – 1$ | | |
| 5 | $t_{v(SIMO)M}$ | Valid time, SPISIMO valid after SPICLK | Even | $0.5t_{c(SPC)M} – 2$ | | ns |
| | | | Odd | $0.5t_{c(SPC)M} – 0.5t_{c(LSPCLK)} – 2$ | | |
| **Normal Mode** | | | | | | |
| 4 | $t_{d(SIMO)M}$ | Delay time, SPISIMO valid to SPICLK | Even | $0.5t_{c(SPC)M} – 5$ | | ns |
| | | | Odd | $0.5t_{c(SPC)M} + 0.5t_{c(LSPCLK)} – 5$ | | |
| 5 | $t_{v(SIMO)M}$ | Valid time, SPISIMO valid after SPICLK | Even | $0.5t_{c(SPC)M} – 5$ | | ns |
| | | | Odd | $0.5t_{c(SPC)M} – 0.5t_{c(LSPCLK)} – 5$ | | |

(1) The (BRR + 1) condition is Even when (SPIBRR + 1) is even or SPIBRR is 0 or 2. It is Odd when (SPIBRR + 1) is odd and SPIBRR is greater than 3.


版权 © 2013–2020, Texas Instruments Incorporated

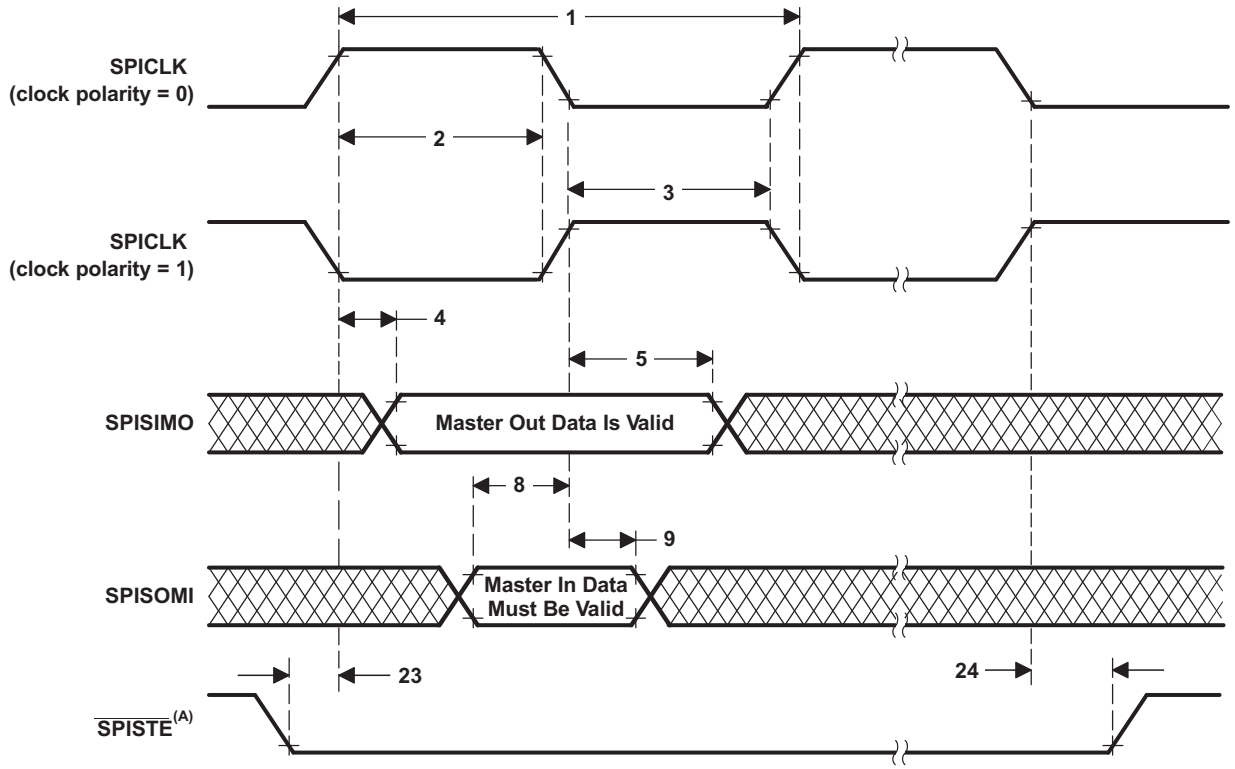


A. On the trailing end of the word, $\overline{\text{SPISTE}}$ will go inactive except between back-to-back transmit words in both FIFO and non-FIFO modes.

**图 5-71. SPI Master Mode External Timing (Clock Phase = 0)**

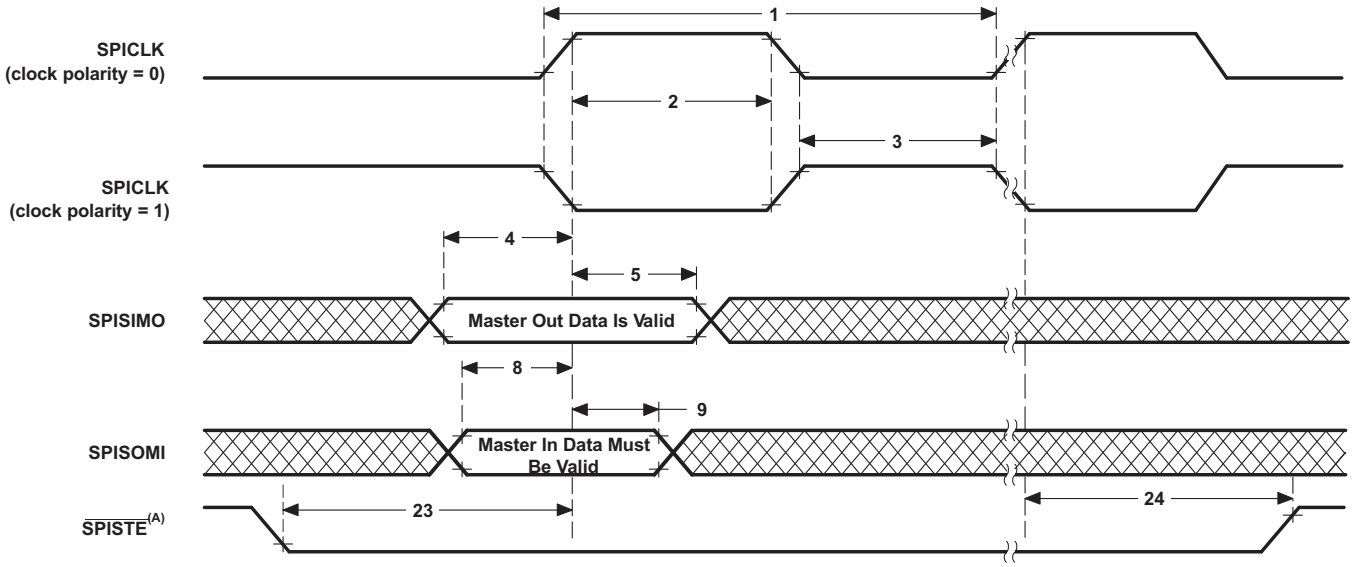


A. On the trailing end of the word, $\overline{\text{SPISTE}}$ will go inactive except between back-to-back transmit words in both FIFO and non-FIFO modes.

**图 5-72. SPI Master Mode External Timing (Clock Phase = 1)**

#### 5.12.5.1.2 SPI Slave Mode Timings

Table 5-80 lists the SPI slave mode timing requirements. Table 5-81 lists the SPI slave mode switching characteristics. 图 5-73 shows the SPI slave mode external timing where the clock phase = 0. 图 5-74 shows the SPI slave mode external timing where the clock phase = 1.

**Table 5-80. SPI Slave Mode Timing Requirements**

| NO. | | | MIN | MAX | UNIT |
|---|---|---|---|---|---|
| 12 | $t_{c(SPC)S}$ | Cycle time, SPICLK | $4t_{c(SYSCLK)}$ | | ns |
| 13 | $t_{w(SPC1)S}$ | Pulse duration, SPICLK, first pulse | $2t_{c(SYSCLK)} – 1$ | | ns |
| 14 | $t_{w(SPC2)S}$ | Pulse duration, SPICLK, second pulse | $2t_{c(SYSCLK)} – 1$ | | ns |
| 19 | $t_{su(SIMO)S}$ | Setup time, SPISIMO valid before SPICLK | $1.5t_{c(SYSCLK)}$ | | ns |
| 20 | $t_{h(SIMO)S}$ | Hold time, SPISIMO valid after SPICLK | $1.5t_{c(SYSCLK)}$ | | ns |
| 25 | $t_{su(STE)S}$ | Setup time, $\overline{SPISTE}$ valid before SPICLK | $2t_{c(SYSCLK)}$ +20 | | ns |
| 26 | $t_{h(STE)S}$ | Hold time, $\overline{SPISTE}$ invalid after SPICLK | $1.5t_{c(SYSCLK)}$ | | ns |

**Table 5-81. SPI Slave Mode Switching Characteristics**

over recommended operating conditions (unless otherwise noted)

| NO. | PARAMETER | | MIN | MAX | UNIT |
|---|---|---|---|---|---|
| **High Speed Mode** | | | | | |
| 15 | $t_{d(SOMI)S}$ | Delay time, SPICLK to SPISOMI valid | | 9 | ns |
| 16 | $t_{v(SOMI)S}$ | Valid time, SPISOMI valid after SPICLK | 0 | | ns |
| **Normal Mode** | | | | | |
| 15 | $t_{d(SOMI)S}$ | Delay time, SPICLK to SPISOMI valid | | 20 | ns |
| 16 | $t_{v(SOMI)S}$ | Valid time, SPISOMI valid after SPICLK | 0 | | ns |

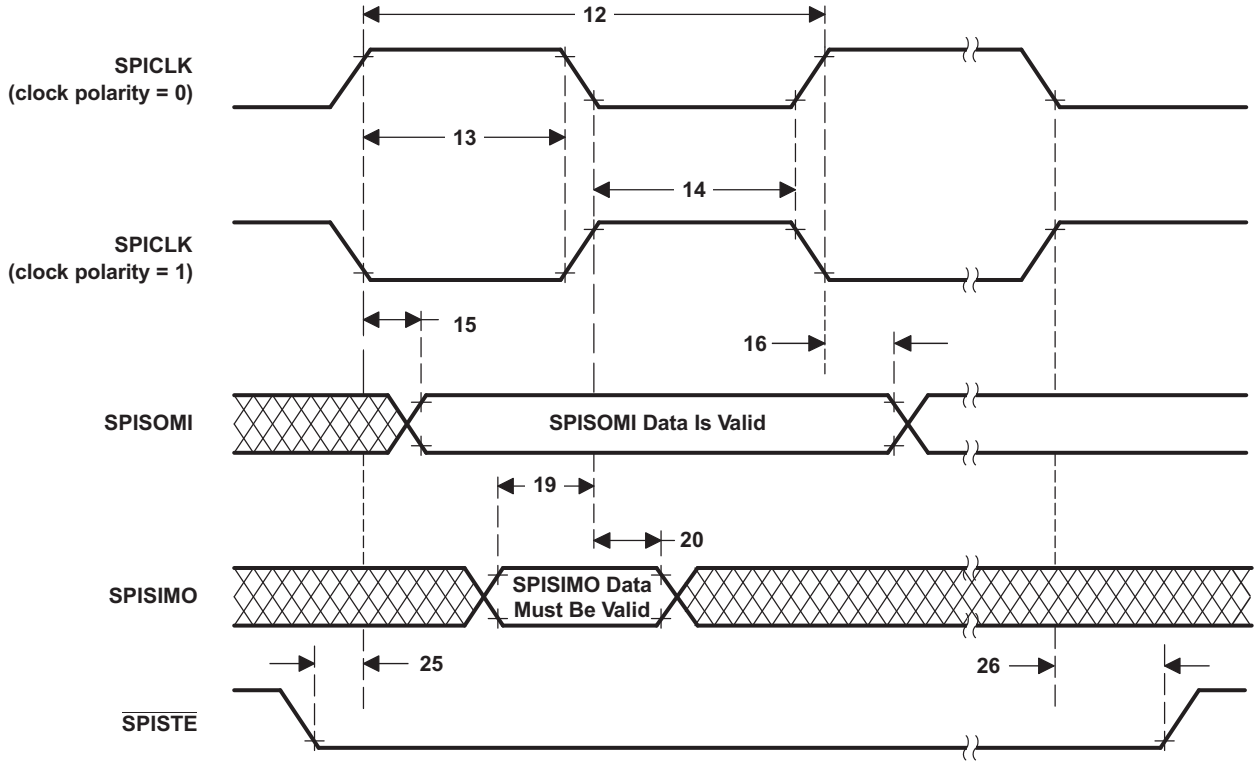


**图 5-73. SPI Slave Mode External Timing (Clock Phase = 0)**


版权 © 2013–2020, Texas Instruments Incorporated

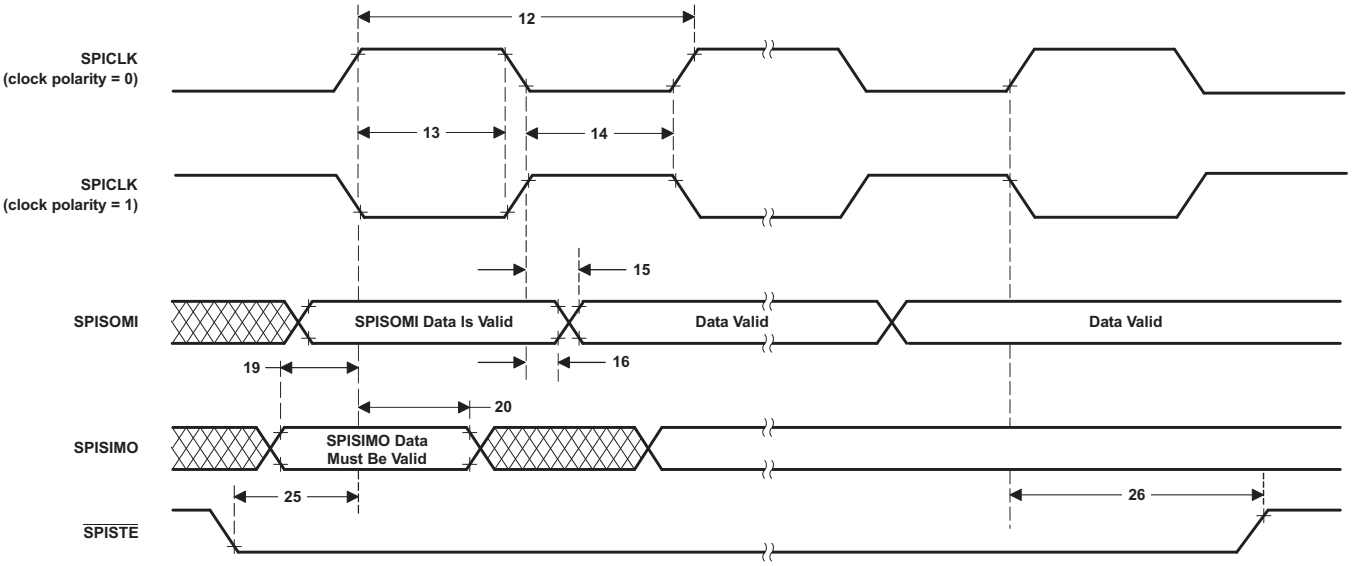


**图 5-74. SPI Slave Mode External Timing (Clock Phase = 1)**

### 5.12.6 Universal Serial Bus (USB) Controller

The USB controller operates as a full-speed or low-speed function controller during point-to-point communications with USB host or device functions.

The USB module has the following features:

- USB 2.0 full-speed and low-speed operation
- Integrated PHY
- Three transfer types: control, interrupt, and bulk
- 32 endpoints
  - One dedicated control IN endpoint and one dedicated control OUT endpoint
  - 15 configurable IN endpoints and 15 configurable OUT endpoints
- 4KB of dedicated endpoint memory

图 5-75 shows the USB block diagram.

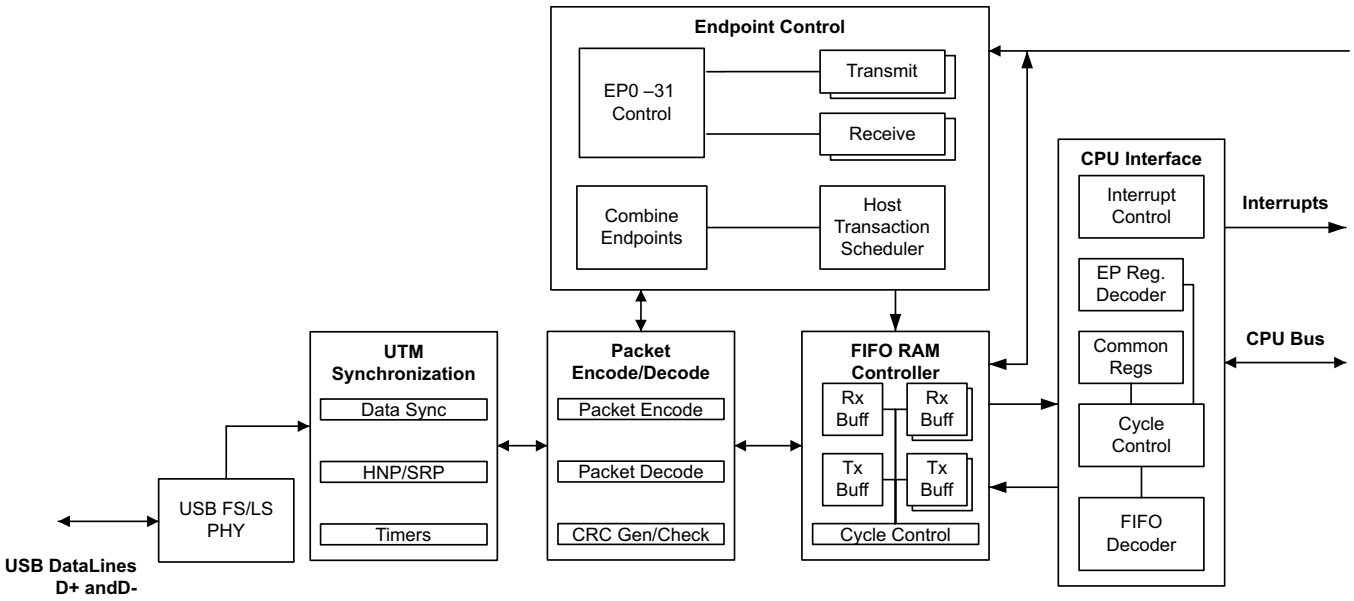


**图 5-75. USB Block Diagram**

---

**注**

The accuracy of the on-chip zero-pin oscillator (Table 5-18, Internal Oscillator Electrical Characteristics) will not meet the accuracy requirements of the USB protocol. An external clock source must be used for applications using USB. For applications using the USB boot mode, see 节 6.10 (Boot ROM and Peripheral Booting) for clock frequency requirements.

---


版权 © 2013–2020, Texas Instruments Incorporated

#### 5.12.6.1 USB Electrical Data and Timing

Table 5-82 shows the USB input ports DP and DM timing requirements. Table 5-83 shows the USB output ports DP and DM switching characteristics.

**Table 5-82. USB Input Ports DP and DM Timing Requirements**

| | | MIN | MAX | UNIT |
|---|---|---|---|---|
| V(CM) | Differential input common mode range | 0.8 | 2.5 | V |
| Z(IN) | Input impedance | 300 | | kΩ |
| VCRS | Crossover voltage | 1.3 | 2.0 | V |
| $V_{IL}$ | Static SE input logic-low level | 0.8 | | V |
| $V_{IH}$ | Static SE input logic-high level | | 2.0 | V |
| VDI | Differential input voltage | | 0.2 | V |

**Table 5-83. USB Output Ports DP and DM Switching Characteristics**

over recommended operating conditions (unless otherwise noted)

| PARAMETER | | TEST CONDITIONS | MIN | MAX | UNIT |
|---|---|---|---|---|---|
| $V_{OH}$ | D+, D– single-ended | USB 2.0 load conditions | 2.8 | 3.6 | V |
| $V_{OL}$ | D+, D– single-ended | USB 2.0 load conditions | 0 | 0.3 | V |
| Z(DRV) | D+, D– impedance | | 28 | 44 | Ω |
| $t_r$ | Rise time | Full speed, differential, $C_L$ = 50 pF, 10%/90%, Rpu on D+ | 4 | 20 | ns |
| $t_f$ | Fall time | Full speed, differential, $C_L$ = 50 pF, 10%/90%, Rpu on D+ | 4 | 20 | ns |

### 5.12.7 Universal Parallel Port (uPP) Interface

The uPP interface is a high-speed parallel interface with dedicated data lines and minimal control signals. The uPP interface is designed to interface cleanly with high-speed ADCs or DACs with 8-bit data width. It can also be interconnected with field-programmable gate arrays (FPGAs) or other uPP devices to achieve high-speed digital data transfer. It can operate in receive mode or transmit mode (simplex mode).

The uPP interface includes an internal DMA controller to maximize throughput and minimize CPU overhead during high-speed data transmission. All uPP transactions use internal DMA to feed data to or retrieve data from the I/O channels. Even though there is only one I/O channel, the DMA controller includes two DMA channels to support data interleave mode, in which all DMA resources service a single I/O channel.

On this device, the uPP interface is the dedicated resource for the CPU1 subsystem. CPU1, CPU1.CLA1, and CPU1.DMA have access to this module. Two dedicated 512-byte data RAMs (also known as MSG RAMs) are tightly coupled with the uPP module (one for each, TX and RX). These data RAMs are used to store the bulk of data to avoid frequent interruptions to the CPU. Only CPU1 and CPU1.CLA1 have access to these data RAMs. 图 5-76 shows the integration of the uPP on this device.

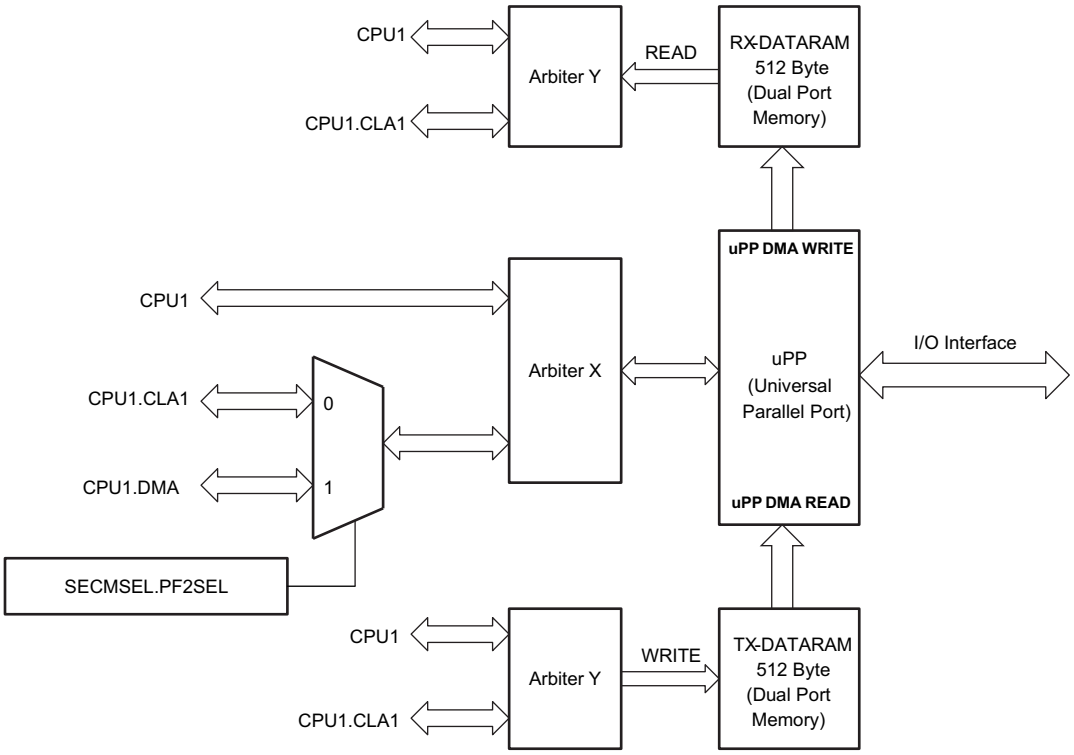


**图 5-76. uPP Integration**

**注**

On some TI devices, the uPP module is also called the Radio Peripheral Interface (RPI) module.


版权 © 2013–2020, Texas Instruments Incorporated

The uPP interface supports the following:

- Mainstream high-speed data converters with parallel conversion interface.
- Mainstream high-speed streaming interface with frame START indication.
- Mainstream high-speed streaming interface with data ENABLE indication.
- Mainstream high-speed streaming interface with synchronization WAIT signal.
- SDR (single-data-rate) or DDR (double-data-rate, interleaved) interface.
- Multiplexing of interleaved data in SDR transmit case.
- Demultiplexing and multiplexing of interleaved data in DDR case.
- I/O interface clock frequency up to 50 MHz for SDR, and 25 MHz for DDR.
- Single-channel 8-bit input receive or output transmit mode.
- Max throughput is 50MB/s for pure read or pure write.
- Available as a DSP to FPGA general-purpose streaming interface.

图 5-77 shows the uPP functional block diagram.

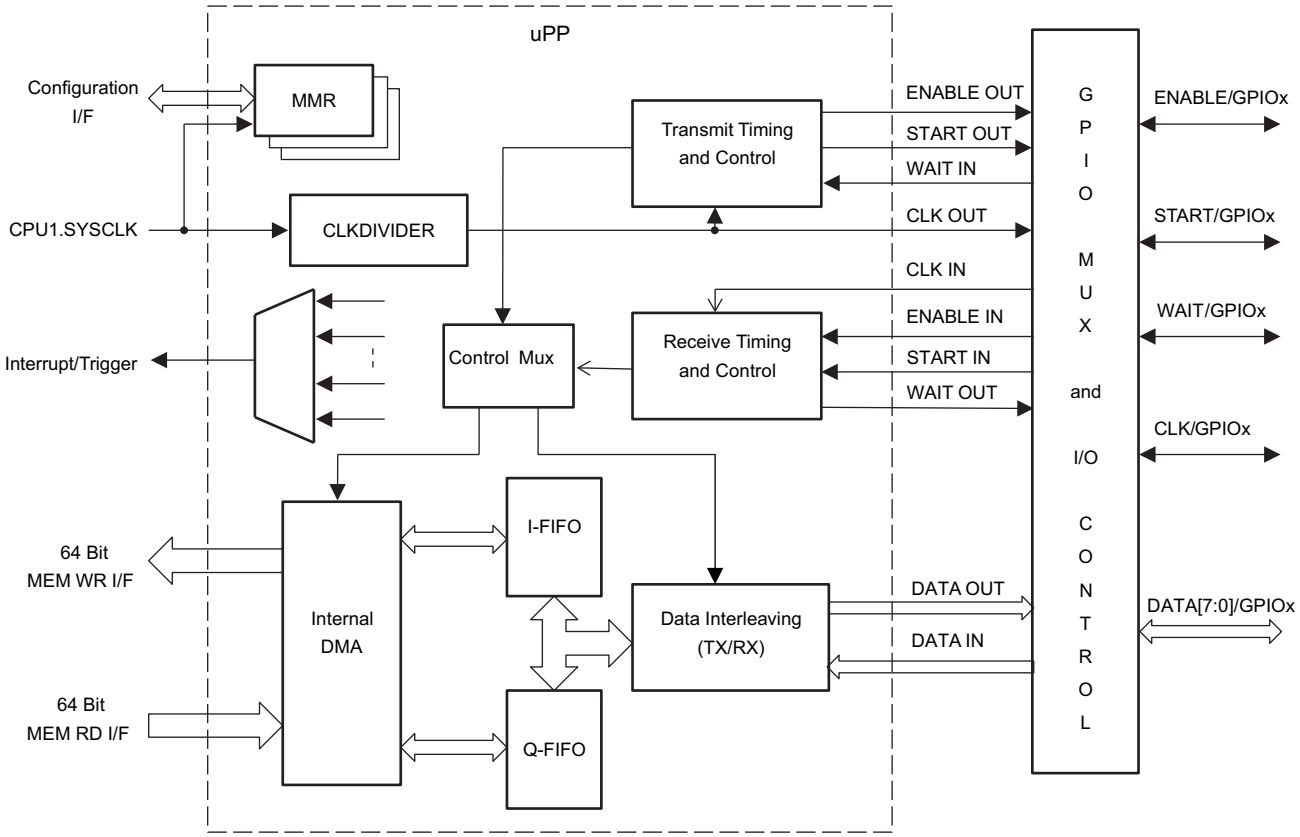


**图 5-77. uPP Functional Block Diagram**

#### 5.12.7.1 uPP Electrical Data and Timing

Table 5-84 shows the uPP timing requirements. Table 5-85 shows the uPP switching characteristics. Figure 5-78 through Figure 5-81 show the uPP timing diagrams.

**Table 5-84. uPP Timing Requirements**

| NO. | | | | MIN | MAX | UNIT |
|---|---|---|---|---|---|---|
| 1 | $t_{c(CLK)}$ | Cycle time, CLK | SDR mode | 20 | | ns |
| | | | DDR mode | 40 | | |
| 2 | $t_{w(CLKH)}$ | Pulse width, CLK high | SDR mode | 8 | | ns |
| | | | DDR mode | 18 | | |
| 3 | $t_{w(CLKL)}$ | Pulse width, CLK low | SDR mode | 8 | | ns |
| | | | DDR mode | 18 | | |
| 4 | $t_{su(STV-CLKH)}$ | Setup time, START valid before CLK high | | 4 | | ns |
| 5 | $t_{h(CLKH-STV)}$ | Hold time, START valid after CLK high | | 0.8 | | ns |
| 6 | $t_{su(ENV-CLKH)}$ | Setup time, ENABLE valid before CLK high | | 4 | | ns |
| 7 | $t_{h(CLKH-ENV)}$ | Hold time, ENABLE valid after CLK high | | 0.8 | | ns |
| 8 | $t_{su(DV-CLKH)}$ | Setup time, DATA valid before CLK high | | 4 | | ns |
| 9 | $t_{h(CLKH-DV)}$ | Hold time, DATA valid after CLK high | | 0.8 | | ns |
| 10 | $t_{su(DV-CLKL)}$ | Setup time, DATA valid before CLK low | | 4 | | ns |
| 11 | $t_{h(CLKL-DV)}$ | Hold time, DATA valid after CLK low | | 0.8 | | ns |
| 19 | $t_{su(WTV-CLKH)}$ | Setup time, WAIT valid before CLK high | SDR mode | 20 | | ns |
| 20 | $t_{h(CLKH-WTV)}$ | Hold time, WAIT valid after CLK high | SDR mode | 0 | | ns |
| 21 | $t_{su(WTV-CLKL)}$ | Setup time, WAIT valid before CLK low | DDR mode | 20 | | ns |
| 22 | $t_{h(CLKL-WTV)}$ | Hold time, WAIT valid after CLK low | DDR mode | 0 | | ns |

**Table 5-85. uPP Switching Characteristics**

over recommended operating conditions (unless otherwise noted)

| NO. | PARAMETER | | | MIN | MAX | UNIT |
|---|---|---|---|---|---|---|
| 12 | $t_{c(CLK)}$ | Cycle time, CLK | SDR mode | 20 | | ns |
| | | | DDR mode | 40 | | |
| 13 | $t_{w(CLKH)}$ | Pulse width, CLK high | SDR mode | 8 | | ns |
| | | | DDR mode | 18 | | |
| 14 | $t_{w(CLKL)}$ | Pulse width, CLK low | SDR mode | 8 | | ns |
| | | | DDR mode | 18 | | |
| 15 | $t_{d(CLKH-STV)}$ | Delay time, START valid after CLK high | | 3 | 12 | ns |
| 16 | $t_{d(CLKH-ENV)}$ | Delay time, ENABLE valid after CLK high | | 3 | 12 | ns |
| 17 | $t_{d(CLKH-DV)}$ | Delay time, DATA valid after CLK high | | 3 | 12 | ns |
| 18 | $t_{d(CLKL-DV)}$ | Delay time, DATA valid after CLK low | | 3 | 12 | ns |


Copyright © 2013–2020, Texas Instruments Incorporated

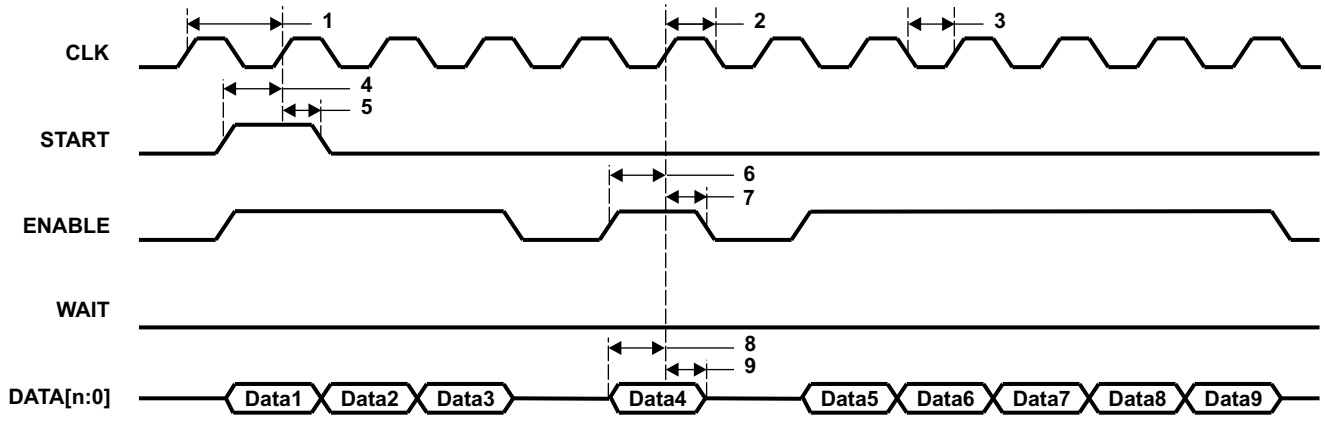


**Figure 5-78. uPP Single Data Rate (SDR) Receive Timing**

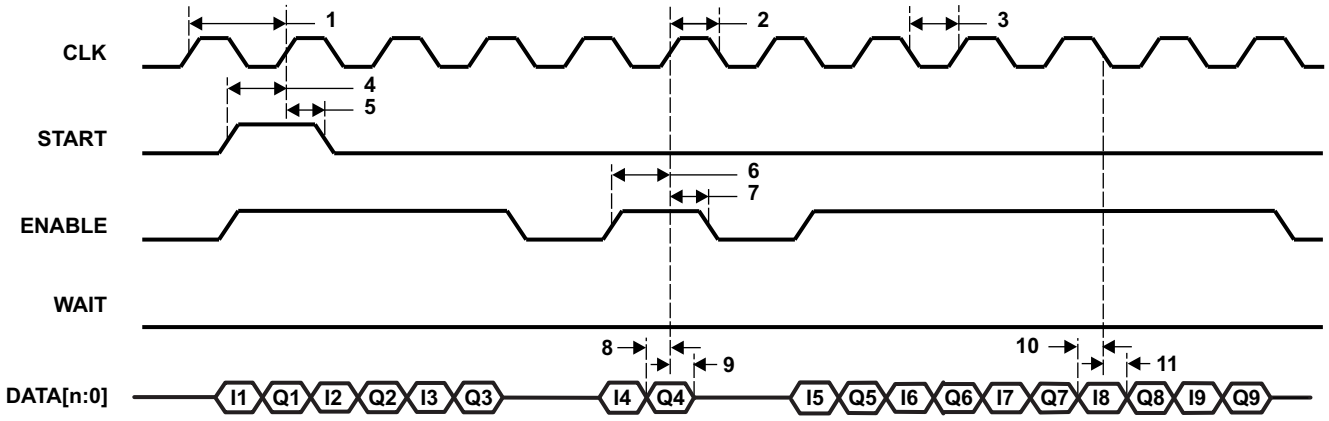


**Figure 5-79. uPP Double Data Rate (DDR) Receive Timing**

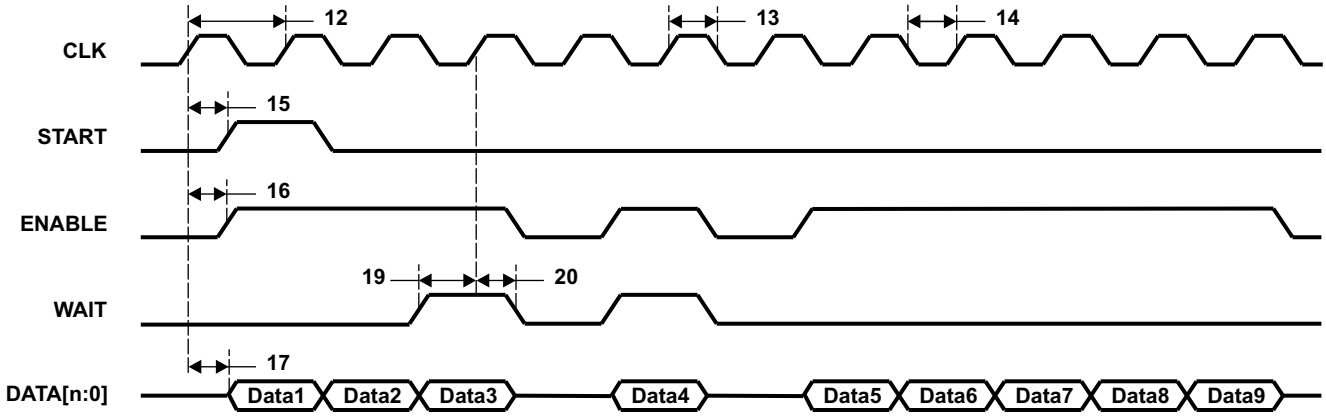


**Figure 5-80. uPP Single Data Rate (SDR) Transmit Timing**

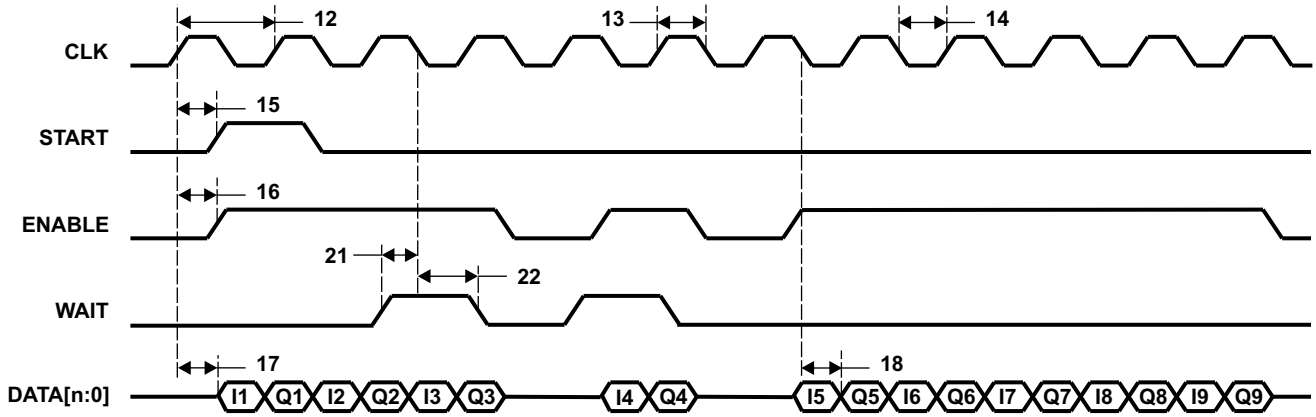


**Figure 5-81. uPP Double Data Rate (DDR) Transmit Timing**


版权 © 2013–2020, Texas Instruments Incorporated

# 6 Detailed Description

## 6.1 Overview

The TMS320F2837xD is a powerful 32-bit floating-point microcontroller unit (MCU) designed for advanced closed-loop control applications such as industrial motor drives; solar inverters and digital power; electrical vehicles and transportation; and sensing and signal processing. Complete development packages for digital power and industrial drives are available as part of the powerSUITE and DesignDRIVE initiatives. The F2837xD supports a new dual-core C28x architecture that significantly boosts system performance. The integrated analog and control peripherals also let designers consolidate control architectures and eliminate multiprocessor use in high-end systems.

The dual real-time control subsystems are based on TI's 32-bit C28x floating-point CPUs, which provide 200 MHz of signal processing performance in each core. The C28x CPUs are further boosted by the new TMU accelerator, which enables fast execution of algorithms with trigonometric operations common in transforms and torque loop calculations; and the VCU accelerator, which reduces the time for complex math operations common in encoded applications.

The F2837xD microcontroller family features two CLA real-time control coprocessors. The CLA is an independent 32-bit floating-point processor that runs at the same speed as the main CPU. The CLA responds to peripheral triggers and executes code concurrently with the main C28x CPU. This parallel processing capability can effectively double the computational performance of a real-time control system. By using the CLA to service time-critical functions, the main C28x CPU is free to perform other tasks, such as communications and diagnostics. The dual C28x+CLA architecture enables intelligent partitioning between various system tasks. For example, one C28x+CLA core can be used to track speed and position, while the other C28x+CLA core can be used to control torque and current loops.

The TMS320F2837xD supports up to 1MB (512KW) of onboard flash memory with error correction code (ECC) and up to 204KB (102KW) of SRAM. Two 128-bit secure zones are also available on each CPU for code protection.

Performance analog and control peripherals are also integrated on the F2837xD MCU to further enable system consolidation. Four independent 16-bit ADCs provide precise and efficient management of multiple analog signals, which ultimately boosts system throughput. The new sigma-delta filter module (SDFM) works in conjunction with the sigma-delta modulator to enable isolated current shunt measurements. The Comparator Subsystem (CMPSS) with windowed comparators allows for protection of power stages when current limit conditions are exceeded or not met. Other analog and control peripherals include DACs, PWMs, eCAPs, eQEPs, and other peripherals.

Peripherals such as EMIFs, CAN modules (ISO 11898-1/CAN 2.0B-compliant), and a new uPP interface extend the connectivity of the F2837xD. The uPP interface is a new feature of the C2000 MCUs and supports high-speed parallel connection to FPGAs or other processors with similar uPP interfaces. Lastly, a USB 2.0 port with MAC and PHY lets users easily add universal serial bus (USB) connectivity to their application.

## 6.2 Functional Block Diagram

图 6-1 shows the CPU system and associated peripherals.

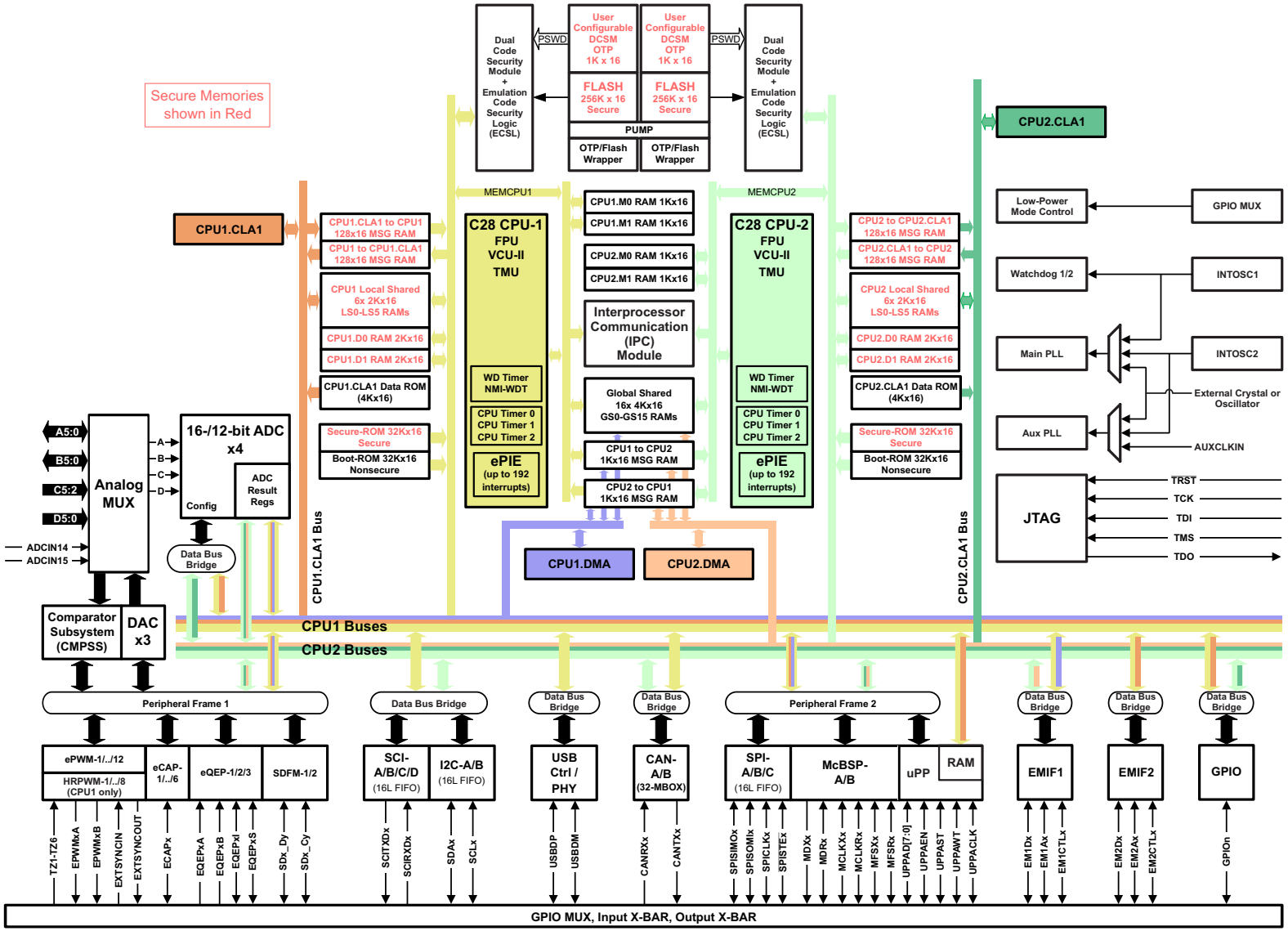


**图 6-1. Functional Block Diagram**


版权 © 2013–2020, Texas Instruments Incorporated

## 6.3 Memory

### 6.3.1 C28x Memory Map

Both C28x CPUs on the device have the same memory map except where noted in 表 6-1. The GSx_RAM (Global Shared RAM) should be assigned to either CPU by the GSxMSEL register. Memories accessible by the CLA or DMA (direct memory access) are noted as well.

**表 6-1. C28x Memory Map**

| MEMORY | SIZE | START ADDRESS | END ADDRESS | CLA ACCESS | DMA ACCESS |
|---|---|---|---|---|---|
| M0 RAM | 1K × 16 | 0x0000 0000 | 0x0000 03FF | | |
| M1 RAM | 1K × 16 | 0x0000 0400 | 0x0000 07FF | | |
| PieVectTable | 512 × 16 | 0x0000 0D00 | 0x0000 0EFF | | |
| CPUx.CLA1 to CPUx MSGRAM | 128 × 16 | 0x0000 1480 | 0x0000 14FF | Yes | |
| CPUx to CPUx.CLA1 MSGRAM | 128 × 16 | 0x0000 1500 | 0x0000 157F | Yes | |
| UPP TX MSG RAM | 512 × 16 | 0x0000 6C00 | 0x0000 6DFF | Yes (CPU1.CLA1 only) | |
| UPP RX MSG RAM | 512 × 16 | 0x0000 6E00 | 0x0000 6FFF | Yes (CPU1.CLA1 only) | |
| LS0 RAM | 2K × 16 | 0x0000 8000 | 0x0000 87FF | Yes | |
| LS1 RAM | 2K × 16 | 0x0000 8800 | 0x0000 8FFF | Yes | |
| LS2 RAM | 2K × 16 | 0x0000 9000 | 0x0000 97FF | Yes | |
| LS3 RAM | 2K × 16 | 0x0000 9800 | 0x0000 9FFF | Yes | |
| LS4 RAM | 2K × 16 | 0x0000 A000 | 0x0000 A7FF | Yes | |
| LS5 RAM | 2K × 16 | 0x0000 A800 | 0x0000 AFFF | Yes | |
| D0 RAM | 2K × 16 | 0x0000 B000 | 0x0000 B7FF | | |
| D1 RAM | 2K × 16 | 0x0000 B800 | 0x0000 BFFF | | |
| GS0 RAM(1) | 4K × 16 | 0x0000 C000 | 0x0000 CFFF | | Yes |
| GS1 RAM(1) | 4K × 16 | 0x0000 D000 | 0x0000 DFFF | | Yes |
| GS2 RAM(1) | 4K × 16 | 0x0000 E000 | 0x0000 EFFF | | Yes |
| GS3 RAM(1) | 4K × 16 | 0x0000 F000 | 0x0000 FFFF | | Yes |
| GS4 RAM(1) | 4K × 16 | 0x0001 0000 | 0x0001 0FFF | | Yes |
| GS5 RAM(1) | 4K × 16 | 0x0001 1000 | 0x0001 1FFF | | Yes |
| GS6 RAM(1) | 4K × 16 | 0x0001 2000 | 0x0001 2FFF | | Yes |
| GS7 RAM(1) | 4K × 16 | 0x0001 3000 | 0x0001 3FFF | | Yes |
| GS8 RAM(1) | 4K × 16 | 0x0001 4000 | 0x0001 4FFF | | Yes |
| GS9 RAM(1) | 4K × 16 | 0x0001 5000 | 0x0001 5FFF | | Yes |
| GS10 RAM(1) | 4K × 16 | 0x0001 6000 | 0x0001 6FFF | | Yes |
| GS11 RAM(1) | 4K × 16 | 0x0001 7000 | 0x0001 7FFF | | Yes |
| GS12 RAM(1)(2) | 4K × 16 | 0x0001 8000 | 0x0001 8FFF | | Yes |
| GS13 RAM(1)(2) | 4K × 16 | 0x0001 9000 | 0x0001 9FFF | | Yes |
| GS14 RAM(1)(2) | 4K × 16 | 0x0001 A000 | 0x0001 AFFF | | Yes |
| GS15 RAM(1)(2) | 4K × 16 | 0x0001 B000 | 0x0001 BFFF | | Yes |
| CPU2 to CPU1 MSGRAM(1) | 1K × 16 | 0x0003 F800 | 0x0003 FBFF | | Yes |
| CPU1 to CPU2 MSGRAM(1) | 1K × 16 | 0x0003 FC00 | 0x0003 FFFF | | Yes |
| CAN A Message RAM(1) | 2K × 16 | 0x0004 9000 | 0x0004 97FF | | |
| CAN B Message RAM(1) | 2K × 16 | 0x0004 B000 | 0x0004 B7FF | | |
| Flash | 256K × 16 | 0x0008 0000 | 0x000B FFFF | | |
| Secure ROM | 32K × 16 | 0x003F 0000 | 0x003F 7FFF | | |
| Boot ROM | 32K × 16 | 0x003F 8000 | 0x003F FFBF | | |
| Vectors | 64 × 16 | 0x003F FFC0 | 0x003F FFFF | | |

(1) Shared between CPU subsystems.
(2) Available only on F28379D, F28378D, F28377D, and F28375D.

### 6.3.2 Flash Memory Map

On the F28379D, F28378D, F28377D, and F28375D devices, each CPU has its own flash bank [512KB (256KW)], the total flash for each device is 1MB (512KW). Only one bank can be programmed or erased at a time and the code to program the flash should be executed out of RAM. Table 6-2 shows the addresses of flash sectors on CPU1 and CPU2 for F28379D, F28378D, F28377D, and F28375D.

**Table 6-2. Addresses of Flash Sectors on CPU1 and CPU2 for F28379D, F28378D, F28377D and F28375D**

| SECTOR | SIZE | START ADDRESS | END ADDRESS |
|---|---|---|---|
| **OTP Sectors** | | | |
| TI OTP | 1K x 16 | 0x0007 0000 | 0x0007 03FF |
| User configurable DCSM OTP | 1K x 16 | 0x0007 8000 | 0x0007 83FF |
| **Sectors** | | | |
| Sector 0 | 8K x 16 | 0x0008 0000 | 0x0008 1FFF |
| Sector 1 | 8K x 16 | 0x0008 2000 | 0x0008 3FFF |
| Sector 2 | 8K x 16 | 0x0008 4000 | 0x0008 5FFF |
| Sector 3 | 8K x 16 | 0x0008 6000 | 0x0008 7FFF |
| Sector 4 | 32K x 16 | 0x0008 8000 | 0x0008 FFFF |
| Sector 5 | 32K x 16 | 0x0009 0000 | 0x0009 7FFF |
| Sector 6 | 32K x 16 | 0x0009 8000 | 0x0009 FFFF |
| Sector 7 | 32K x 16 | 0x000A 0000 | 0x000A 7FFF |
| Sector 8 | 32K x 16 | 0x000A 8000 | 0x000A FFFF |
| Sector 9 | 32K x 16 | 0x000B 0000 | 0x000B 7FFF |
| Sector 10 | 8K x 16 | 0x000B 8000 | 0x000B 9FFF |
| Sector 11 | 8K x 16 | 0x000B A000 | 0x000B BFFF |
| Sector 12 | 8K x 16 | 0x000B C000 | 0x000B DFFF |
| Sector 13 | 8K x 16 | 0x000B E000 | 0x000B FFFF |
| **Flash ECC Locations** | | | |
| TI OTP ECC | 128 x 16 | 0x0107 0000 | 0x0107 007F |
| User-configurable DCSM OTP ECC | 128 x 16 | 0x0107 1000 | 0x0107 107F |
| Flash ECC (Sector 0) | 1K x 16 | 0x0108 0000 | 0x0108 03FF |
| Flash ECC (Sector 1) | 1K x 16 | 0x0108 0400 | 0x0108 07FF |
| Flash ECC (Sector 2) | 1K x 16 | 0x0108 0800 | 0x0108 0BFF |
| Flash ECC (Sector 3) | 1K x 16 | 0x0108 0C00 | 0x0108 0FFF |
| Flash ECC (Sector 4) | 4K x 16 | 0x0108 1000 | 0x0108 1FFF |
| Flash ECC (Sector 5) | 4K x 16 | 0x0108 2000 | 0x0108 2FFF |
| Flash ECC (Sector 6) | 4K x 16 | 0x0108 3000 | 0x0108 3FFF |
| Flash ECC (Sector 7) | 4K x 16 | 0x0108 4000 | 0x0108 4FFF |
| Flash ECC (Sector 8) | 4K x 16 | 0x0108 5000 | 0x0108 5FFF |
| Flash ECC (Sector 9) | 4K x 16 | 0x0108 6000 | 0x0108 6FFF |
| Flash ECC (Sector 10) | 1K x 16 | 0x0108 7000 | 0x0108 73FF |
| Flash ECC (Sector 11) | 1K x 16 | 0x0108 7400 | 0x0108 77FF |
| Flash ECC (Sector 12) | 1K x 16 | 0x0108 7800 | 0x0108 7BFF |
| Flash ECC (Sector 13) | 1K x 16 | 0x0108 7C00 | 0x0108 7FFF |


版权 © 2013–2020, Texas Instruments Incorporated

On the F28376D and F28374D devices, each CPU has its own flash bank [256KB (128KW)], the total flash for each device is 512KB (256KW). Only one bank can be programmed or erased at a time and the code to program the flash should be executed out of RAM. Table 6-3 shows the addresses of flash sectors on CPU1 and CPU2 for F28376D and F28374D.

**Table 6-3. Addresses of Flash Sectors on CPU1 and CPU2 for F28376D and F28374D**

| SECTOR | SIZE | START ADDRESS | END ADDRESS |
|---|---|---|---|
| **OTP Sectors** | | | |
| TI OTP | 1K x 16 | 0x0007 0000 | 0x0007 03FF |
| User configurable DCSM OTP | 1K x 16 | 0x0007 8000 | 0x0007 83FF |
| **Sectors** | | | |
| Sector 0 | 8K x 16 | 0x0008 0000 | 0x0008 1FFF |
| Sector 1 | 8K x 16 | 0x0008 2000 | 0x0008 3FFF |
| Sector 2 | 8K x 16 | 0x0008 4000 | 0x0008 5FFF |
| Sector 3 | 8K x 16 | 0x0008 6000 | 0x0008 7FFF |
| Sector 4 | 32K x 16 | 0x0008 8000 | 0x0008 FFFF |
| Sector 5 | 32K x 16 | 0x0009 0000 | 0x0009 7FFF |
| Sector 6 | 32K x 16 | 0x0009 8000 | 0x0009 FFFF |
| **Flash ECC Locations** | | | |
| TI OTP ECC | 128 x 16 | 0x0107 0000 | 0x0107 007F |
| User-configurable DCSM OTP ECC | 128 x 16 | 0x0107 1000 | 0x0107 107F |
| Flash ECC (Sector 0) | 1K x 16 | 0x0108 0000 | 0x0108 03FF |
| Flash ECC (Sector 1) | 1K x 16 | 0x0108 0400 | 0x0108 07FF |
| Flash ECC (Sector 2) | 1K x 16 | 0x0108 0800 | 0x0108 0BFF |
| Flash ECC (Sector 3) | 1K x 16 | 0x0108 0C00 | 0x0108 0FFF |
| Flash ECC (Sector 4) | 4K x 16 | 0x0108 1000 | 0x0108 1FFF |
| Flash ECC (Sector 5) | 4K x 16 | 0x0108 2000 | 0x0108 2FFF |
| Flash ECC (Sector 6) | 4K x 16 | 0x0108 3000 | 0x0108 3FFF |

### 6.3.3 EMIF Chip Select Memory Map

The EMIF1 memory map is the same for both CPU subsystems. EMIF2 is available only on the CPU1 subsystem. The EMIF memory map is shown in 表 6-4.

**表 6-4. EMIF Chip Select Memory Map**

| EMIF CHIP SELECT | SIZE (1) | START ADDRESS | END ADDRESS | CLA ACCESS | DMA ACCESS |
|---|---|---|---|---|---|
| EMIF1_CS0n - Data | 256M × 16 | 0x8000 0000 | 0x8FFF FFFF | | Yes |
| EMIF1_CS2n - Program + Data (2) | 2M × 16 | 0x0010 0000 | 0x002F FFFF | | Yes |
| EMIF1_CS3n - Program + Data | 512K × 16 | 0x0030 0000 | 0x0037 FFFF | | Yes |
| EMIF1_CS4n - Program + Data | 393K × 16 | 0x0038 0000 | 0x003D FFFF | | Yes |
| EMIF2_CS0n - Data (3) | 3M × 16 | 0x9000 0000 | 0x91FF FFFF | | |
| EMIF2_CS2n - Program + Data (3) | 4K × 16 | 0x0000 2000 | 0x0000 2FFF | Yes (Data only) | |

(1) Available memory size listed in this table is the maximum possible size assuming 32-bit memory. This may not apply to other memory sizes because of pin mux setting. See Section 4.4.1 to find the available address lines for your use case.
(2) The 2M × 16 size is for a 32-bit interface with the assumption that 16-bit accesses are not performed; hence, byte enables are not used (tied to active value on board). If byte enables are used, then the maximum size is smaller because byte enables are muxed with address pins (see Section 4.4.1). If 16-bit memory is used, then the maximum size is 1M × 16.
(3) Available only on the CPU1 subsystem.

### 6.3.4 Peripheral Registers Memory Map

The peripheral registers memory map can be found in 表 6-5. The peripheral registers can be assigned to either the CPU1 or CPU2 subsystems except where noted in 表 6-5. Registers in the peripheral frames share a secondary master (CLA or DMA) selection with all other registers within the same peripheral frame. See the *TMS320F2837xD Dual-Core Microcontrollers Technical Reference Manual* for details on the CPU subsystem and secondary master selection.

**表 6-5. Peripheral Registers Memory Map**

| REGISTERS | STRUCTURE NAME | START ADDRESS | END ADDRESS | PROTECTED (1) | CLA ACCESS | DMA ACCESS |
|---|---|---|---|---|---|---|
| AdcaResultRegs | ADC_RESULT_REGS | 0x0000 0B00 | 0x0000 0B1F | | Yes | Yes |
| AdcbResultRegs | ADC_RESULT_REGS | 0x0000 0B20 | 0x0000 0B3F | | Yes | Yes |
| AdccResultRegs | ADC_RESULT_REGS | 0x0000 0B40 | 0x0000 0B5F | | Yes | Yes |
| AdcdResultRegs | ADC_RESULT_REGS | 0x0000 0B60 | 0x0000 0B7F | | Yes | Yes |
| CpuTimer0Regs (2) | CPUTIMER_REGS | 0x0000 0C00 | 0x0000 0C07 | | | |
| CpuTimer1Regs (2) | CPUTIMER_REGS | 0x0000 0C08 | 0x0000 0C0F | | | |
| CpuTimer2Regs (2) | CPUTIMER_REGS | 0x0000 0C10 | 0x0000 0C17 | | | |
| PieCtrlRegs (2) | PIE_CTRL_REGS | 0x0000 0CE0 | 0x0000 0CFF | | | |
| Cla1SoftIntRegs | CLA_SOFTINT_REGS | 0x0000 0CE0 | 0x0000 0CFF | | Yes – CLA only, no CPU access | |
| DmaRegs (2) | DMA_REGS | 0x0000 1000 | 0x0000 11FF | | | |
| Cla1Regs (2) | CLA_REGS | 0x0000 1400 | 0x0000 147F | | | |
| **Peripheral Frame 1** | | | | | | |
| EPwm1Regs | EPWM_REGS | 0x0000 4000 | 0x0000 40FF | Yes | Yes | Yes |
| EPwm2Regs | EPWM_REGS | 0x0000 4100 | 0x0000 41FF | Yes | Yes | Yes |
| EPwm3Regs | EPWM_REGS | 0x0000 4200 | 0x0000 42FF | Yes | Yes | Yes |
| EPwm4Regs | EPWM_REGS | 0x0000 4300 | 0x0000 43FF | Yes | Yes | Yes |
| EPwm5Regs | EPWM_REGS | 0x0000 4400 | 0x0000 44FF | Yes | Yes | Yes |
| EPwm6Regs | EPWM_REGS | 0x0000 4500 | 0x0000 45FF | Yes | Yes | Yes |
| EPwm7Regs | EPWM_REGS | 0x0000 4600 | 0x0000 46FF | Yes | Yes | Yes |
| EPwm8Regs | EPWM_REGS | 0x0000 4700 | 0x0000 47FF | Yes | Yes | Yes |
| EPwm9Regs | EPWM_REGS | 0x0000 4800 | 0x0000 48FF | Yes | Yes | Yes |
| EPwm10Regs | EPWM_REGS | 0x0000 4900 | 0x0000 49FF | Yes | Yes | Yes |


版权 © 2013–2020, Texas Instruments Incorporated

## 表 6-5. Peripheral Registers Memory Map (continued)

| REGISTERS | STRUCTURE NAME | START ADDRESS | END ADDRESS | PROTECTED[1] | CLA ACCESS | DMA ACCESS |
|---|---|---|---|---|---|---|
| EPwm11Regs | EPWM_REGS | 0x0000 4A00 | 0x0000 4AFF | Yes | Yes | Yes |
| EPwm12Regs | EPWM_REGS | 0x0000 4B00 | 0x0000 4BFF | Yes | Yes | Yes |
| ECap1Regs | ECAP_REGS | 0x0000 5000 | 0x0000 501F | Yes | Yes | Yes |
| ECap2Regs | ECAP_REGS | 0x0000 5020 | 0x0000 503F | Yes | Yes | Yes |
| ECap3Regs | ECAP_REGS | 0x0000 5040 | 0x0000 505F | Yes | Yes | Yes |
| ECap4Regs | ECAP_REGS | 0x0000 5060 | 0x0000 507F | Yes | Yes | Yes |
| ECap5Regs | ECAP_REGS | 0x0000 5080 | 0x0000 509F | Yes | Yes | Yes |
| ECap6Regs | ECAP_REGS | 0x0000 50A0 | 0x0000 50BF | Yes | Yes | Yes |
| EQep1Regs | EQEP_REGS | 0x0000 5100 | 0x0000 513F | Yes | Yes | Yes |
| EQep2Regs | EQEP_REGS | 0x0000 5140 | 0x0000 517F | Yes | Yes | Yes |
| EQep3Regs | EQEP_REGS | 0x0000 5180 | 0x0000 51BF | Yes | Yes | Yes |
| DacaRegs | DAC_REGS | 0x0000 5C00 | 0x0000 5C0F | Yes | Yes | Yes |
| DacbRegs | DAC_REGS | 0x0000 5C10 | 0x0000 5C1F | Yes | Yes | Yes |
| DaccRegs | DAC_REGS | 0x0000 5C20 | 0x0000 5C2F | Yes | Yes | Yes |
| Cmpss1Regs | CMPSS_REGS | 0x0000 5C80 | 0x0000 5C9F | Yes | Yes | Yes |
| Cmpss2Regs | CMPSS_REGS | 0x0000 5CA0 | 0x0000 5CBF | Yes | Yes | Yes |
| Cmpss3Regs | CMPSS_REGS | 0x0000 5CC0 | 0x0000 5CDF | Yes | Yes | Yes |
| Cmpss4Regs | CMPSS_REGS | 0x0000 5CE0 | 0x0000 5CFF | Yes | Yes | Yes |
| Cmpss5Regs | CMPSS_REGS | 0x0000 5D00 | 0x0000 5D1F | Yes | Yes | Yes |
| Cmpss6Regs | CMPSS_REGS | 0x0000 5D20 | 0x0000 5D3F | Yes | Yes | Yes |
| Cmpss7Regs | CMPSS_REGS | 0x0000 5D40 | 0x0000 5D5F | Yes | Yes | Yes |
| Cmpss8Regs | CMPSS_REGS | 0x0000 5D60 | 0x0000 5D7F | Yes | Yes | Yes |
| Sdfm1Regs | SDFM_REGS | 0x0000 5E00 | 0x0000 5E7F | Yes | Yes | Yes |
| Sdfm2Regs | SDFM_REGS | 0x0000 5E80 | 0x0000 5EFF | Yes | Yes | Yes |
| **Peripheral Frame 2** | | | | | | |
| McbspaRegs | MCBSP_REGS | 0x0000 6000 | 0x0000 603F | Yes | Yes | Yes |
| McbspbRegs | MCBSP_REGS | 0x0000 6040 | 0x0000 607F | Yes | Yes | Yes |
| SpiaRegs | SPI_REGS | 0x0000 6100 | 0x0000 610F | Yes | Yes | Yes |
| SpibRegs | SPI_REGS | 0x0000 6110 | 0x0000 611F | Yes | Yes | Yes |
| SpicRegs | SPI_REGS | 0x0000 6120 | 0x0000 612F | Yes | Yes | Yes |
| UppRegs[3] | UPP_REGS | 0x0000 6200 | 0x0000 62FF | Yes | Yes | Yes |
| | | | | | | |
| WdRegs[2] | WD_REGS | 0x0000 7000 | 0x0000 703F | Yes | | |
| NmiIntruptRegs[2] | NMI_INTRUPT_REGS | 0x0000 7060 | 0x0000 706F | Yes | | |
| XintRegs[2] | XINT_REGS | 0x0000 7070 | 0x0000 707F | Yes | | |
| SciaRegs | SCI_REGS | 0x0000 7200 | 0x0000 720F | Yes | | |
| ScibRegs | SCI_REGS | 0x0000 7210 | 0x0000 721F | Yes | | |
| ScicRegs | SCI_REGS | 0x0000 7220 | 0x0000 722F | Yes | | |
| ScidRegs | SCI_REGS | 0x0000 7230 | 0x0000 723F | Yes | | |
| I2caRegs | I2C_REGS | 0x0000 7300 | 0x0000 733F | Yes | | |
| I2cbRegs | I2C_REGS | 0x0000 7340 | 0x0000 737F | Yes | | |
| AdcaRegs | ADC_REGS | 0x0000 7400 | 0x0000 747F | Yes | Yes | |
| AdcbRegs | ADC_REGS | 0x0000 7480 | 0x0000 74FF | Yes | Yes | |
| AdccRegs | ADC_REGS | 0x0000 7500 | 0x0000 757F | Yes | Yes | |
| AdcdRegs | ADC_REGS | 0x0000 7580 | 0x0000 75FF | Yes | Yes | |
| InputXbarRegs[3] | INPUT_XBAR_REGS | 0x0000 7900 | 0x0000 791F | Yes | | |
| XbarRegs[3] | XBAR_REGS | 0x0000 7920 | 0x0000 793F | Yes | | |
| TrigRegs[3] | TRIG_REGS | 0x0000 7940 | 0x0000 794F | Yes | | |
| DmaClaSrcSelRegs[2] | DMA_CLA_SRC_SEL_REGS | 0x0000 7980 | 0x0000 798F | Yes | | |
| EPwmXbarRegs[3] | EPWM_XBAR_REGS | 0x0000 7A00 | 0x0000 7A3F | Yes | | |

### 表 6-5. Peripheral Registers Memory Map (continued)

| REGISTERS | STRUCTURE NAME | START ADDRESS | END ADDRESS | PROTECTED(1) | CLA ACCESS | DMA ACCESS |
|---|---|---|---|---|---|---|
| OutputXbarRegs(3) | OUTPUT_XBAR_REGS | 0x0000 7A80 | 0x0000 7ABF | Yes | | |
| GpioCtrlRegs(3) | GPIO_CTRL_REGS | 0x0000 7C00 | 0x0000 7D7F | Yes | | |
| GpioDataRegs(2) | GPIO_DATA_REGS | 0x0000 7F00 | 0x0000 7F2F | Yes | Yes | |
| UsbaRegs(3) | USB_REGS | 0x0004 0000 | 0x0004 0FFF | Yes | | |
| Emif1Regs | EMIF_REGS | 0x0004 7000 | 0x0004 77FF | Yes | | |
| Emif2Regs(3) | EMIF_REGS | 0x0004 7800 | 0x0004 7FFF | Yes | | |
| CanaRegs | CAN_REGS | 0x0004 8000 | 0x0004 87FF | Yes | | |
| CanbRegs | CAN_REGS | 0x0004 A000 | 0x0004 A7FF | Yes | | |
| IpcRegs(2) | IPC_REGS_CPU1<br>IPC_REGS_CPU2 | 0x0005 0000 | 0x0005 0023 | Yes | | |
| FlashPumpSemaphoreRegs(2) | FLASH_PUMP_SEMAPHORE_REGS | 0x0005 0024 | 0x0005 0025 | Yes | | |
| DevCfgRegs(3) | DEV_CFG_REGS | 0x0005 D000 | 0x0005 D17F | Yes | | |
| AnalogSubsysRegs(3) | ANALOG_SUBSYS_REGS | 0x0005 D180 | 0x0005 D1FF | Yes | | |
| ClkCfgRegs(4) | CLK_CFG_REGS | 0x0005 D200 | 0x0005 D2FF | Yes | | |
| CpuSysRegs(2) | CPU_SYS_REGS | 0x0005 D300 | 0x0005 D3FF | Yes | | |
| RomPrefetchRegs(3) | ROM_PREFETCH_REGS | 0x0005 E608 | 0x0005 E60B | Yes | | |
| DcsmZ1Regs(2) | DCSM_Z1_REGS | 0x0005 F000 | 0x0005 F02F | Yes | | |
| DcsmZ2Regs(2) | DCSM_Z2_REGS | 0x0005 F040 | 0x0005 F05F | Yes | | |
| DcsmCommonRegs(2) | DCSM_COMMON_REGS | 0x0005 F070 | 0x0005 F07F | Yes | | |
| MemCfgRegs(2) | MEM_CFG_REGS | 0x0005 F400 | 0x0005 F47F | Yes | | |
| Emif1ConfigRegs(2) | EMIF1_CONFIG_REGS | 0x0005 F480 | 0x0005 F49F | Yes | | |
| Emif2ConfigRegs(3) | EMIF2_CONFIG_REGS | 0x0005 F4A0 | 0x0005 F4BF | Yes | | |
| AccessProtectionRegs(2) | ACCESS_PROTECTION_REGS | 0x0005 F4C0 | 0x0005 F4FF | Yes | | |
| MemoryErrorRegs(2) | MEMORY_ERROR_REGS | 0x0005 F500 | 0x0005 F53F | Yes | | |
| RomWaitStateRegs(3) | ROM_WAIT_STATE_REGS | 0x0005 F540 | 0x0005 F541 | Yes | | |
| Flash0CtrlRegs(2) | FLASH_CTRL_REGS | 0x0005 F800 | 0x0005 FAFF | Yes | | |
| Flash0EccRegs(2) | FLASH_ECC_REGS | 0x0005 FB00 | 0x0005 FB3F | Yes | | |

(1) The CPU (not applicable for CLA or DMA) contains a write followed by read protection mode to ensure that any read operation that follows a write operation within a protected address range is executed as written by delaying the read operation until the write is initiated.

(2) A unique copy of these registers exist on each CPU subsystem.

(3) These registers are available only on the CPU1 subsystem.

(4) These registers are mapped to either CPU1 or CPU2 based on a semaphore.


版权 © 2013–2020, Texas Instruments Incorporated

### 6.3.5 Memory Types

表 6-6 provides more information about each memory type.

**表 6-6. Memory Types**

| MEMORY TYPE | ECC-CAPABLE | PARITY | SECURITY | HIBERNATE RETENTION | ACCESS PROTECTION |
|---|---|---|---|---|---|
| M0, M1 | Yes | – | – | Yes | – |
| D0, D1 | Yes | – | Yes | – | Yes |
| LSx | – | Yes | Yes | – | Yes |
| GSx | – | Yes | – | – | Yes |
| CPU/CLA MSGRAM | – | Yes | Yes | – | Yes |
| Boot ROM | – | – | – | N/A | – |
| Secure ROM | – | – | Yes | N/A | – |
| Flash | Yes | – | Yes | N/A | N/A |
| User-configurable DCSM OTP | Yes | – | Yes | N/A | N/A |

#### 6.3.5.1 Dedicated RAM (Mx and Dx RAM)

The CPU subsystem has four dedicated ECC-capable RAM blocks: M0, M1, D0, and D1. M0/M1 memories are small nonsecure blocks that are tightly coupled with the CPU (that is, only the CPU has access to them). D0/D1 memories are secure blocks and also have the access-protection feature (CPU write/CPU fetch protection).

#### 6.3.5.2 Local Shared RAM (LSx RAM)

RAM blocks which are dedicated to each subsystem and are accessible to its CPU and CLA only, are called local shared RAMs (LSx RAMs).

All LSx RAM blocks have parity. These memories are secure and have the access protection (CPU write/CPU fetch) feature.

By default, these memories are dedicated to the CPU only, and the user could choose to share these memories with the CLA by configuring the MSEL_LSx bit field in the LSxMSEL registers appropriately.

表 6-7 shows the master access for the LSx RAM.

**表 6-7. Master Access for LSx RAM (With Assumption That all Other Access Protections are Disabled)**

| MSEL_LSx | CLAPGM_LSx | CPU ALLOWED ACCESS | CLA ALLOWED ACCESS | COMMENT |
|---|---|---|---|---|
| 00 | X | All | – | LSx memory is configured as CPU dedicated RAM. |
| 01 | 0 | All | Data Read<br>Data Write | LSx memory is shared between CPU and CLA1. |
| 01 | 1 | Emulation Read<br>Emulation Write | Fetch Only | LSx memory is CLA1 program memory. |

#### 6.3.5.3 Global Shared RAM (GSx RAM)

RAM blocks which are accessible from both the CPU and DMA are called global shared RAMs (GSx RAMs). Each shared RAM block can be owned by either CPU subsystem based on the configuration of respective bits in the GSxMSEL register.

All GSx RAM blocks have parity.

When a GSx RAM block is owned by a CPU subsystem, the CPUx and CPUx.DMA will have full access to that RAM block whereas the other CPUy and CPUy.DMA will only have read access (no fetch/write access).

表 6-8 shows the master access for the GSx RAM.

**表 6-8. Master Access for GSx RAM (With Assumption That all Other Access Protections are Disabled)**

| GSxMSEL | CPU | INSTRUCTION FETCH | READ | WRITE | CPUx.DMA READ | CPUx.DMA WRITE |
|---|---|---|---|---|---|---|
| 0 | CPU1 | Yes | Yes | Yes | Yes | Yes |
| | CPU2 | – | Yes | – | Yes | – |
| 1 | CPU1 | – | Yes | – | Yes | – |
| | CPU2 | Yes | Yes | Yes | Yes | Yes |

The GSx RAMs have access protection (CPU write/CPU fetch/DMA write).

#### 6.3.5.4 CPU Message RAM (CPU MSGRAM)

These RAM blocks can be used to share data between CPU1 and CPU2. Since these RAMs are used for interprocessor communication, they are also called IPC RAMs. The CPU MSGRAMs have CPU/DMA read/write access from its own CPU subsystem, and CPU/DMA read only access from the other subsystem.

This RAM has parity.

#### 6.3.5.5 CLA Message RAM (CLA MSGRAM)

These RAM blocks can be used to share data between the CPU and CLA. The CLA has read and write access to the "CLA to CPU MSGRAM." The CPU has read and write access to the "CPU to CLA MSGRAM." The CPU and CLA both have read access to both MSGRAMs.

This RAM has parity.


版权 © 2013–2020, Texas Instruments Incorporated

## 6.4 Identification

表 6-9 shows the Device Identification Registers.

**表 6-9. Device Identification Registers**

| NAME | ADDRESS | SIZE (x16) | DESCRIPTION | |
|---|---|---|---|---|
| PARTIDH | 0x0005 D00A (CPU1)<br>0x0007 0202 (CPU2) | 2 | Device part identification number(1) | |
| | | | TMS320F28379D | 0x**F9 0300 |
| | | | TMS320F28378D | 0x**FA 0300 |
| | | | TMS320F28377D | 0x**FF 0300 |
| | | | TMS320F28376D | 0x**FE 0300 |
| | | | TMS320F28375D | 0x**FD 0300 |
| | | | TMS320F28374D | 0x**FC 0300 |
| REVID | 0x0005 D00C | 2 | Silicon revision number | |
| | | | Revision 0 | 0x0000 0000 |
| | | | Revision A | 0x0000 0000 |
| | | | Revision B | 0x0000 0002 |
| | | | Revision C | 0x0000 0003 |
| UID_UNIQUE | 0x0007 03CC | 2 | Unique identification number. This number is different on each individual device with the same PARTIDH. This can be used as a serial number in the application. This number is present only on TMS Revision C devices. | |
| CPU ID | 0x0007 026D | 1 | CPU identification number | |
| | | | CPU1 | 0xXX01 |
| | | | CPU2 | 0xXX02 |
| JTAG ID | N/A | N/A | JTAG Device ID | 0x0B99 C02F |

(1) PARTIDH may have one of two values for each part number, with the eight most significant bits identified with '**' above being 0x00 or 0x02.

## 6.5 Bus Architecture – Peripheral Connectivity

表 6-10 shows a broad view of the peripheral and configuration register accessibility from each bus master. Peripherals can be individually assigned to the CPU1 or CPU2 subsystem (for example, ePWM can be assigned to CPU1 and eQEP assigned to CPU2). Peripherals within peripheral frames 1 or 2 will all be mapped to the respective secondary master as a group (if SPI is assigned to CPUx.DMA, then McBSP is also assigned to CPUx.DMA).

**表 6-10. Bus Master Peripheral Access**

| PERIPHERALS (BY BUS ACCESS TYPE) | CPU1.DMA | CPU1.CLA1 | CPU1 | CPU2 | CPU2.CLA1 | CPU2.DMA |
|---|---|---|---|---|---|---|
| **Peripherals that can be assigned to CPU1 or CPU2 and have common selectable Secondary Masters** | | | | | | |
| Peripheral Frame 1:<br>• ePWM<br>• SDFM<br>• eCAP(1)<br>• eQEP(1)<br>• CMPSS(1)<br>• DAC(1) | Y | Y | Y | Y | Y | Y |
| Peripheral Frame 1:<br>• HRPWM | Y | Y | Y | | | |
| Peripheral Frame 2:<br>• SPI<br>• McBSP | Y | Y | Y | Y | Y | Y |
| Peripheral Frame 2:<br>• uPP Configuration(1) | Y | Y | Y | | | |
| **Peripherals that can be assigned to CPU1 or CPU2 subsystems** | | | | | | |
| SCI | | | Y | Y | | |
| I2C | | | Y | Y | | |
| CAN | | | Y | Y | | |
| ADC Configuration | | Y | Y | Y | Y | |
| EMIF1 | Y | | Y | Y | | Y |
| **Peripherals and Device Configuration Registers only on CPU1 subsystem** | | | | | | |
| EMIF2 | | Y | Y | | | |
| USB | | | Y | | | |
| Device Capability, Peripheral Reset, Peripheral CPU Select | | | Y | | | |
| GPIO Pin Mapping and Configuration | | | Y | | | |
| Analog System Control | | | Y | | | |
| uPP Message RAMs | | Y | Y | | | |
| Reset Configuration | | | Y | | | |
| **Accessible by only one CPU at a time with Semaphore** | | | | | | |
| Clock and PLL Configuration | | | Y | Y | | |
| **Peripherals and Registers with Unique Copies of Registers for each CPU and CLA Master(2)** | | | | | | |
| System Configuration (WD, NMIWD, LPM, Peripheral Clock Gating) | | | Y | Y | | |
| Flash Configuration(3) | | | Y | Y | | |
| CPU Timers | | | Y | Y | | |
| DMA and CLA Trigger Source Select | | | Y | Y | | |
| GPIO Data(4) | | Y | Y | Y | Y | |
| ADC Results | Y | Y | Y | Y | Y | Y |

(1) These modules are on a Peripheral Frame with DMA access; however, they cannot trigger a DMA transfer.
(2) Each CPUx and CPUx.CLA1 can only access its own copy of these registers.
(3) At any given time, only one CPU can perform program or erase operations on the Flash.
(4) The GPIO Data Registers are unique for each CPUx and CPUx.CLAx. When the GPIO Pin Mapping Register is configured to assign a GPIO to a particular master, the respective GPIO Data Register will control the GPIO. See the General-Purpose Input/Output (GPIO) chapter of the *TMS320F2837xD Dual-Core Microcontrollers Technical Reference Manual* for more details.


版权 © 2013–2020, Texas Instruments Incorporated

## 6.6 C28x Processor

The CPU is a 32-bit fixed-point processor. This device draws from the best features of digital signal processing; reduced instruction set computing (RISC); and microcontroller architectures, firmware, and tool sets.

The CPU features include a modified Harvard architecture and circular addressing. The RISC features are single-cycle instruction execution, register-to-register operations, and modified Harvard architecture. The microcontroller features include ease of use through an intuitive instruction set, byte packing and unpacking, and bit manipulation. The modified Harvard architecture of the CPU enables instruction and data fetches to be performed in parallel. The CPU can read instructions and data while it writes data simultaneously to maintain the single-cycle instruction operation across the pipeline. The CPU does this over six separate address/data buses.

For more information on CPU architecture and instruction set, see the *TMS320C28x CPU and Instruction Set Reference Guide*.

### 6.6.1 Floating-Point Unit

The C28x plus floating-point (C28x+FPU) processor extends the capabilities of the C28x fixed-point CPU by adding registers and instructions to support IEEE single-precision floating-point operations.

Devices with the C28x+FPU include the standard C28x register set plus an additional set of floating-point unit registers. The additional floating-point unit registers are the following:

- Eight floating-point result registers, RnH (where n = 0–7)
- Floating-point Status Register (STF)
- Repeat Block Register (RB)

All of the floating-point registers, except the repeat block register, are shadowed. This shadowing can be used in high-priority interrupts for fast context save and restore of the floating-point registers.

For more information, see the *TMS320C28x Extended Instruction Sets Technical Reference Manual*.

### 6.6.2 Trigonometric Math Unit

The TMU extends the capabilities of a C28x+FPU by adding instructions and leveraging existing FPU instructions to speed up the execution of common trigonometric and arithmetic operations listed in 表 6-11.

**表 6-11. TMU Supported Instructions**

| INSTRUCTIONS | C EQUIVALENT OPERATION | PIPELINE CYCLES |
|---|---|---|
| MPY2PIF32 RaH,RbH | a = b * 2pi | 2/3 |
| DIV2PIF32 RaH,RbH | a = b / 2pi | 2/3 |
| DIVF32 RaH,RbH,RcH | a = b/c | 5 |
| SQRTF32 RaH,RbH | a = sqrt(b) | 5 |
| SINPUF32 RaH,RbH | a = sin(b*2pi) | 4 |
| COSPUF32 RaH,RbH | a = cos(b*2pi) | 4 |
| ATANPUF32 RaH,RbH | a = atan(b)/2pi | 4 |
| QUADF32 RaH,RbH,RcH,RdH | Operation to assist in calculating ATANPU2 | 5 |

No changes have been made to existing instructions, pipeline or memory bus architecture. All TMU instructions use the existing FPU register set (R0H to R7H) to carry out their operations. A detailed explanation of the workings of the FPU can be found in the *TMS320C28x Extended Instruction Sets Technical Reference Manual*.

### 6.6.3 Viterbi, Complex Math, and CRC Unit II (VCU-II)

The VCU-II is the second-generation Viterbi, Complex Math, and CRC extension to the C28x CPU. The VCU-II extends the capabilities of the C28x CPU by adding registers and instructions to accelerate the performance of FFTs and communications-based algorithms. The C28x+VCU-II supports the following algorithm types:

- **Viterbi Decoding**

  Viterbi decoding is commonly used in baseband communications applications. The Viterbi decode algorithm consists of three main parts: branch metric calculations, compare-select (Viterbi butterfly), and a traceback operation. 表 6-12 shows a summary of the VCU performance for each of these operations.

**表 6-12. Viterbi Decode Performance**

| VITERBI OPERATION | VCU CYCLES |
|---|---|
| Branch Metric Calculation (code rate = 1/2) | 1 |
| Branch Metric Calculation (code rate = 1/3) | 2p |
| Viterbi Butterfly (add-compare-select) | 2 (1) |
| Traceback per Stage | 3 (2) |

(1) C28x CPU takes 15 cycles per butterfly.
(2) C28x CPU takes 22 cycles per stage.

- **Cyclic Redundancy Check**

  Cyclic redundancy check (CRC) algorithms provide a straightforward method for verifying data integrity over large data blocks, communication packets, or code sections. The C28x+VCU can perform 8-bit, 16-bit, 24-bit, and 32-bit CRCs. For example, the VCU can compute the CRC for a block length of 10 bytes in 10 cycles. A CRC result register contains the current CRC, which is updated whenever a CRC instruction is executed.

- **Complex Math**

  Complex math is used in many applications, a few of which are:

  – Fast Fourier Transform (FFT)

    The complex FFT is used in spread spectrum communications, as well as in many signal processing algorithms.

  – Complex filters

    Complex filters improve data reliability, transmission distance, and power efficiency. The C28x+VCU can perform a complex I and Q multiply with coefficients (four multiplies) in a single cycle. In addition, the C28x+VCU can read/write the real and imaginary parts of 16-bit complex data to memory in a single cycle.

  表 6-13 shows a summary of the VCU operations enabled by the VCU.


版权 © 2013–2020, Texas Instruments Incorporated

**表 6-13. Complex Math Performance**

| COMPLEX MATH OPERATION | VCU CYCLES | NOTES |
|---|---|---|
| Add or Subtract | 1 | 32 +/- 32 = 32-bit (Useful for filters) |
| Add or Subtract | 1 | 16 +/- 32 = 15-bit (Useful for FFT) |
| Multiply | 2p | 16 x 16 = 32-bit |
| Multiply and Accumulate (MAC) | 2p | 32 + 32 = 32-bit, 16 x 16 = 32-bit |
| RPT MAC | 2p+N | Repeat MAC. Single cycle after the first operation. |

For more information, see the *TMS320C28x Extended Instruction Sets Technical Reference Manual*.

## 6.7 Control Law Accelerator

The CLA is an independent single-precision (32-bit) FPU processor with its own bus structure, fetch mechanism, and pipeline. Eight individual CLA tasks can be specified. Each task is started by software or a peripheral such as the ADC, ePWM, eCAP, eQEP, or CPU Timer 0. The CLA executes one task at a time to completion. When a task completes, the main CPU is notified by an interrupt to the PIE and the CLA automatically begins the next highest-priority pending task. The CLA can directly access the ADC Result registers, ePWM, eCAP, eQEP, Comparator and DAC registers. Dedicated message RAMs provide a method to pass additional data between the main CPU and the CLA.

图 6-2 shows the CLA block diagram.

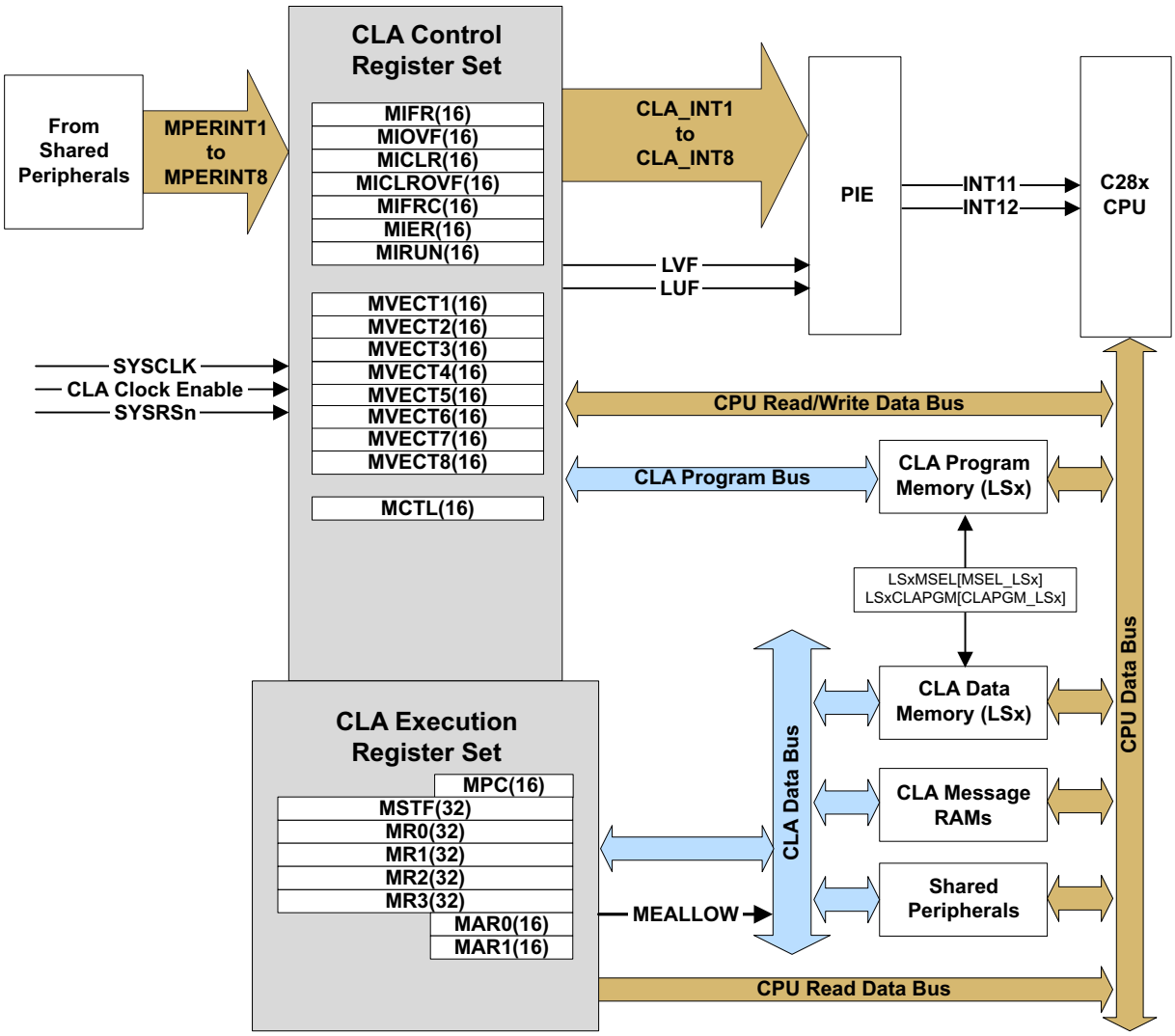


图 6-2. CLA Block Diagram


版权 © 2013–2020, Texas Instruments Incorporated

## 6.8 Direct Memory Access

Each CPU has its own 6-channel DMA module. The DMA module provides a hardware method of transferring data between peripherals and/or memory without intervention from the CPU, thereby freeing up bandwidth for other system functions. Additionally, the DMA has the capability to orthogonally rearrange the data as it is transferred as well as “ping-pong” data between buffers. These features are useful for structuring data into blocks for optimal CPU processing.

The DMA module is an event-based machine, meaning it requires a peripheral or software trigger to start a DMA transfer. Although it can be made into a periodic time-driven machine by configuring a timer as the interrupt trigger source, there is no mechanism within the module itself to start memory transfers periodically. The interrupt trigger source for each of the six DMA channels can be configured separately and each channel contains its own independent PIE interrupt to let the CPU know when a DMA transfer has either started or completed. Five of the six channels are exactly the same, while Channel 1 has the ability to be configured at a higher priority than the others.

DMA features include:

- Six channels with independent PIE interrupts
- Peripheral interrupt trigger sources
  - ADC interrupts and EVT signals
  - Multichannel buffered serial port transmit and receive
  - External interrupts
  - CPU timers
  - EPWMxSOC signals
  - SPIx transmit and receive
  - SDFM
  - Software trigger
- Data sources and destinations:
  - GSx RAM
  - CPU message RAM (IPC RAM)
  - ADC result registers
  - ePWMx
  - SPI
  - McBSP
  - EMIF
- Word Size: 16-bit or 32-bit (SPI and McBSP limited to 16-bit)
- Throughput: four cycles/word (without arbitration)

图 6-3 shows a device-level block diagram of the DMA.

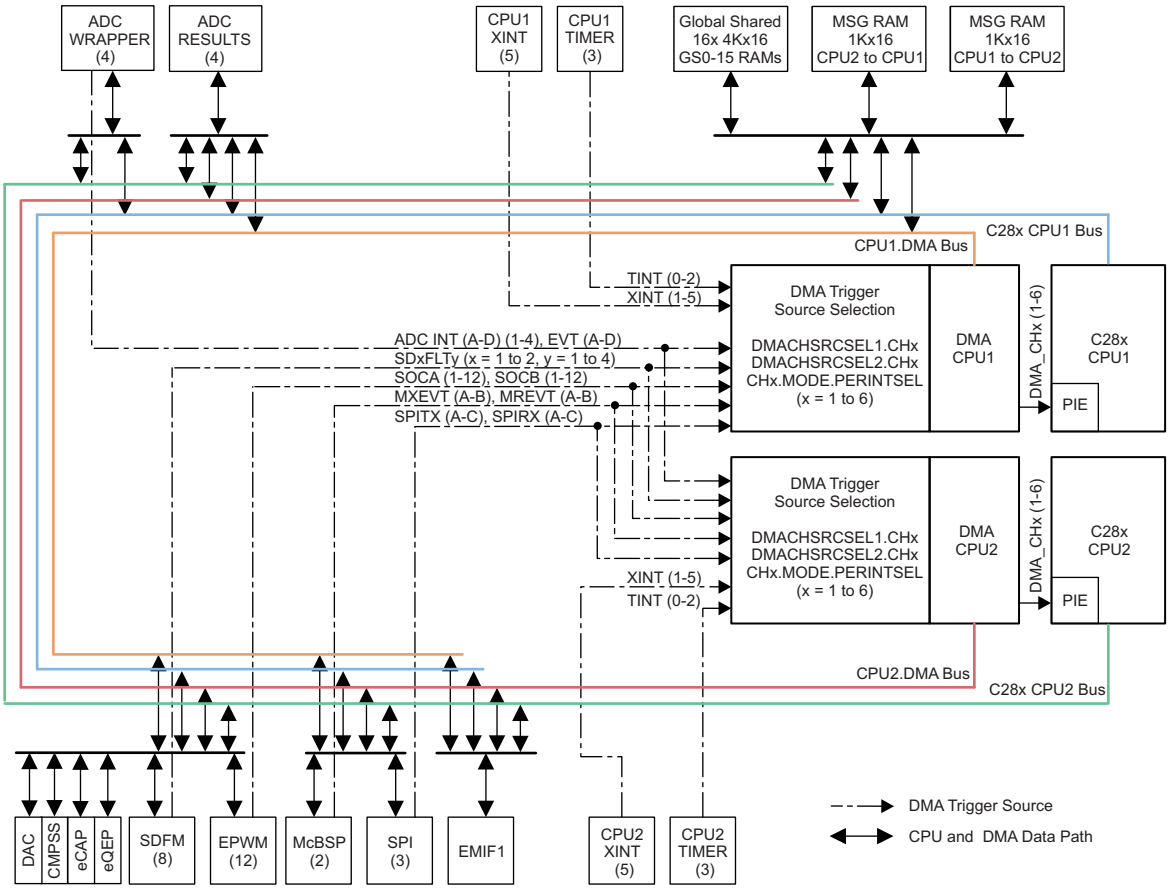


**图 6-3. DMA Block Diagram**


版权 © 2013–2020, Texas Instruments Incorporated

## 6.9 Interprocessor Communication Module

The IPC module supports several methods of interprocessor communication:

- Thirty-two IPC flags per CPU, which can be used to signal events or indicate status through software polling. Four flags per CPU can generate interrupts.
- Shared data registers, which can be used to send commands or other small pieces of information between CPUs. Although the register names were chosen to support a command/response system, they can be used for any purpose as defined in software.
- Boot mode and status registers, which allow CPU1 to control the CPU2 boot process.
- A general-purpose free-running 64-bit counter.
- Two shared message RAMs, which can be used to transfer bulk data. Each RAM can be read by both CPUs. CPU1 can write to one RAM and CPU2 can write to the other.

图 6-4 shows the IPC architecture.

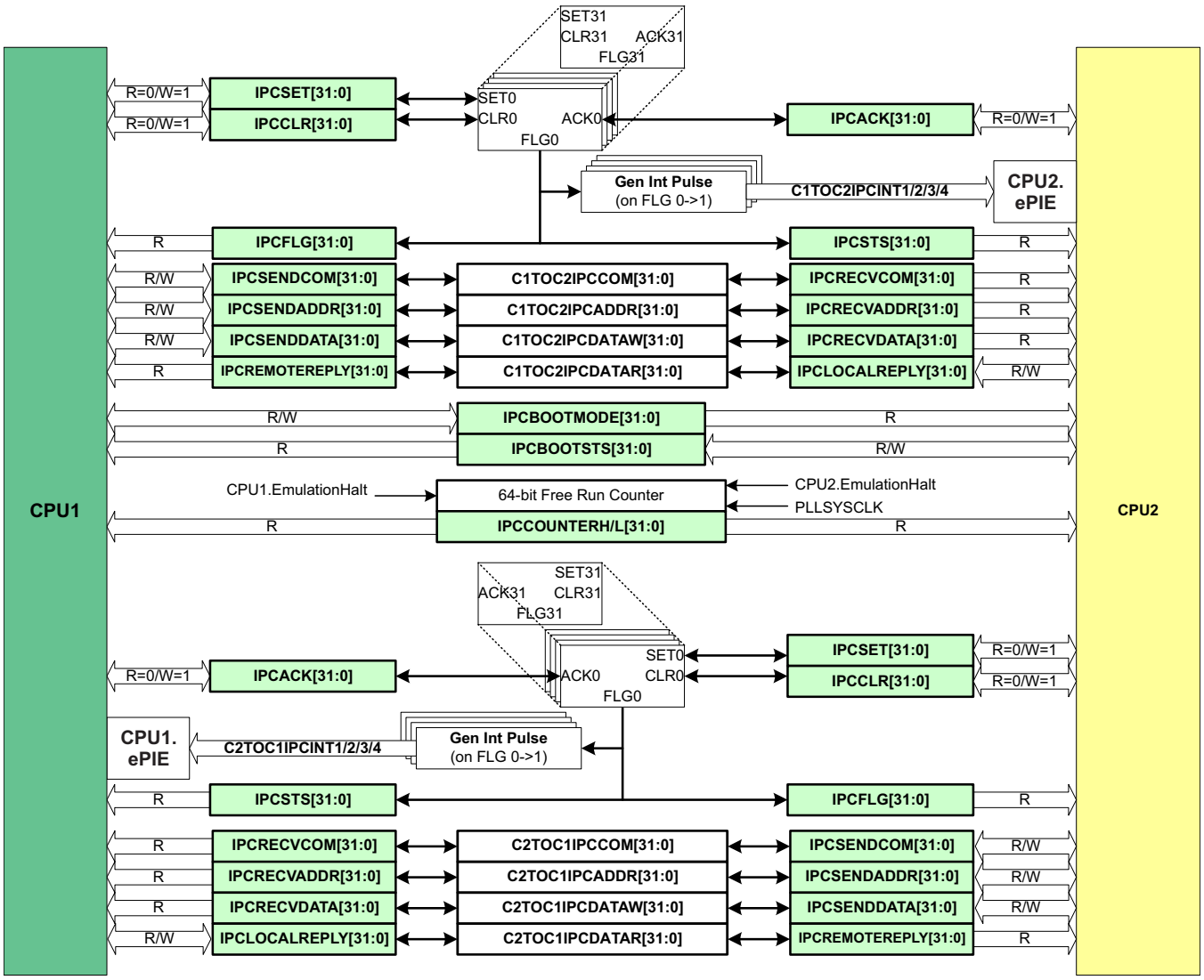


**图 6-4. IPC Architecture**

## 6.10 Boot ROM and Peripheral Booting

The device boot ROM (on both the CPUs) contains bootloading software. The CPU1 boot ROM does the system initialization before bringing CPU2 out of reset. The device boot ROM is executed each time the device comes out of reset. Users can configure the device to boot to flash (using GET mode) or choose to boot the device through one of the bootable peripherals by configuring the boot mode GPIO pins.

The CPU1 boot ROM, being master, owns the boot mode GPIO and boot configurations. The CPU2 boot ROM either boots to flash (if configured to do so through user configurable DCSM OTP) or enters a WAIT BOOT mode if no OTP is programmed. In WAIT BOOT mode, the CPU1 application instructs the CPU2 boot ROM on how to boot further using boot mode IPC commands supported by CPU2 boot ROM.

表 6-14 shows the possible boot modes supported on the device. The default boot mode pins are GPIO72 (boot mode pin 1) and GPIO 84 (boot mode pin 0). Users may choose to have weak pullups for boot mode pins if they use a peripheral on these pins as well, so the pullups can be overdriven. On this device, customers can change the factory default boot mode pins by programming user configurable DCSM OTP locations. This is recommended only for cases in which the factory default boot mode pins do not fit into the customer design. More details on the locations to be programmed is available in the *TMS320F2837xD Dual-Core Microcontrollers Technical Reference Manual*.

**表 6-14. Device Boot Mode**

| MODE NO. | CPU1 BOOT MODE | CPU2 BOOT MODE | $\overline{\text{TRST}}$ | GPIO72 (BOOT MODE PIN 1) | GPIO84 (BOOT MODE PIN 0) |
|---|---|---|---|---|---|
| 0 | Parallel I/O | Boot from Master | 0 | 0 | 0 |
| 1 | SCI Mode | Boot from Master | 0 | 0 | 1 |
| 2 | Wait Boot Mode | Boot from master | 0 | 1 | 0 |
| 3 | Get Mode | Boot from Master | 0 | 1 | 1 |
| 4-7 | EMU Boot Mode (debug probe connected) | Boot from Master | 1 | X | X |

**注**

The default behavior of Get mode is boot-to-flash. On unprogrammed devices, using Get mode will result in repeated watchdog resets, which may prevent proper JTAG connection and device initialization. Use Wait mode or another boot mode for unprogrammed devices.

**CAUTION**

Some reset sources are internally driven by the device. The user must ensure the pins used for boot mode are not actively driven by other devices in the system for these cases. The boot configuration has a provision for changing the boot pins in OTP. For more details, see the *TMS320F2837xD Dual-Core Microcontrollers Technical Reference Manual*.


版权 © 2013–2020, Texas Instruments Incorporated

### 6.10.1 EMU Boot or Emulation Boot

The CPU enters this boot when it detects that $\overline{\text{TRST}}$ is HIGH (that is, when a debug probe/debugger is connected). In this mode, the user can program the EMU_BOOTCTRL control-word (at location 0xD00) to instruct the device on how to boot. If the contents of the EMU_BOOTCTRL location are invalid, then the device would default to WAIT Boot mode. The emulation boot allows users to verify the device boot before programming the boot mode into OTP. Note that EMU_BOOTCTRL is not actually a register, but refers to a location in RAM (PIE RAM). PIE RAM starts at 0xD00, but the first few locations are reserved (when initializing the PIE vector table in application code) for these boot ROM variables.

### 6.10.2 WAIT Boot Mode

The device in this boot mode loops in the boot ROM. This mode is useful if users want to connect a debugger on a secure device or if users do not want the device to execute an application in flash yet.

### 6.10.3 Get Mode

The default behavior of Get mode is boot-to-flash. This behavior can be changed by programming the Zx-OTPBOOTCTRL locations in user configurable DCSM OTP. The user configurable DCSM OTP on this device is divided in to two secure zones: Z1 and Z2. The Get mode function in boot ROM first checks if a valid OTPBOOTCTRL value is programmed in Z1. If the answer is yes, then the device boots as per the Z1-OTPBOOTCTRL location. The Z2-OTPBOOTCTRL location is read and decodes only if Z1-OTPBOOTCTRL is invalid or not programmed. If either Zx-OTPBOOTCTRL location is not programmed, then the device defaults to factory default operation, which is to use factory default boot mode pins to boot to flash if the boot mode pins are set to GET MODE. Users can choose the device through which to boot—SPI, I2C, CAN, and USB—by programming proper values into the user configurable DCSM OTP. More details on this can be found in the *TMS320F2837xD Dual-Core Microcontrollers Technical Reference Manual*.

### 6.10.4 Peripheral Pins Used by Bootloaders

表 6-15 shows the GPIO pins used by each peripheral bootloader. This device supports two sets of GPIOs for each mode, as shown in 表 6-15.

**表 6-15. GPIO Pins Used by Each Peripheral Bootloader**

| BOOTLOADER | GPIO PINS | NOTES |
|---|---|---|
| SCI-Boot0 | SCITXDA: GPIO84<br>SCIRXDA: GPIO85 | SCIA Boot I/O option 1 (default SCI option when chosen through Boot Mode GPIOs) |
| SCI-Boot1 | SCIRXDA: GPIO28<br>SCITXDA: GPIO29 | SCIA Boot option 2 – with alternate I/Os. |
| Parallel Boot | D0 – GPIO65<br>D1 – GPIO64<br>D2 – GPIO58<br>D3 – GPIO59<br>D4 – GPIO60<br>D5 – GPIO61<br>D6 – GPIO62<br>D7 – GPIO63<br>HOST_CTRL – GPIO70<br>DSP_CTRL – GPIO69 | |
| CAN-Boot0 | CANRXA: GPIO70<br>CANTXA: GPIO71 | CAN-A Boot – I/O option 1 |
| CAN-Boot1 | CANRXA: GPIO62<br>CANTXA: GPIO63 | CAN-A Boot – I/O option 2 |
| I2C-Boot0 | SDAA: GPIO91<br>SCLA: GPIO92 | I2CA Boot – I/O option 1 |
| I2C-Boot1 | SDAA: GPIO32<br>SCLA: GPIO33 | I2CA Boot – I/O option 2 |
| SPI-Boot0 | SPISIMOA - GPIO58<br>SPISOMIA - GPIO59<br>SPICLKA - GPIO60<br>SPISTEA - GPIO61 | SPIA Boot – I/O option 1 |
| SPI-Boot1 | SPISIMOA – GPIO16<br>SPISOMIA – GPIO17<br>SPICLKA – GPIO18<br>SPISTEA – GPIO19 | SPIA Boot – I/O option 2 |
| USB Boot | USB0DM - GPIO42<br>USB0DP - GPIO43 | The USB Bootloader will switch the clock source to the external crystal oscillator (X1 and X2 pins). A 20-MHz crystal should be present on the board if this boot mode is selected. |


版权 © 2013–2020, Texas Instruments Incorporated

## 6.11 Dual Code Security Module

The dual code security module (DCSM) prevents access to on-chip secure memories. The term “secure” means access to secure memories and resources is blocked. The term “unsecure” means access is allowed; for example, through a debugging tool such as Code Composer Studio™ (CSS).

The code security mechanism offers protection for two zones, Zone 1 (Z1) and Zone 2 (Z2). The security implementation for both the zones is identical. Each zone has its own dedicated secure resource (OTP memory and secure ROM) and allocated secure resource (CLA, LSx RAM, and flash sectors).

The security of each zone is ensured by its own 128-bit password (CSM password). The password for each zone is stored in an OTP memory location based on a zone-specific link pointer. The link pointer value can be changed to program a different set of security settings (including passwords) in OTP.

---

**Code Security Module Disclaimer**

THE CODE SECURITY MODULE (CSM) INCLUDED ON THIS DEVICE WAS DESIGNED TO PASSWORD PROTECT THE DATA STORED IN THE ASSOCIATED MEMORY AND IS WARRANTED BY TEXAS INSTRUMENTS (TI), IN ACCORDANCE WITH ITS STANDARD TERMS AND CONDITIONS, TO CONFORM TO TI'S PUBLISHED SPECIFICATIONS FOR THE WARRANTY PERIOD APPLICABLE FOR THIS DEVICE.

TI DOES NOT, HOWEVER, WARRANT OR REPRESENT THAT THE CSM CANNOT BE COMPROMISED OR BREACHED OR THAT THE DATA STORED IN THE ASSOCIATED MEMORY CANNOT BE ACCESSED THROUGH OTHER MEANS. MOREOVER, EXCEPT AS SET FORTH ABOVE, TI MAKES NO WARRANTIES OR REPRESENTATIONS CONCERNING THE CSM OR OPERATION OF THIS DEVICE, INCLUDING ANY IMPLIED WARRANTIES OF MERCHANTABILITY OR FITNESS FOR A PARTICULAR PURPOSE.

IN NO EVENT SHALL TI BE LIABLE FOR ANY CONSEQUENTIAL, SPECIAL, INDIRECT, INCIDENTAL, OR PUNITIVE DAMAGES, HOWEVER CAUSED, ARISING IN ANY WAY OUT OF YOUR USE OF THE CSM OR THIS DEVICE, WHETHER OR NOT TI HAS BEEN ADVISED OF THE POSSIBILITY OF SUCH DAMAGES. EXCLUDED DAMAGES INCLUDE, BUT ARE NOT LIMITED TO LOSS OF DATA, LOSS OF GOODWILL, LOSS OF USE OR INTERRUPTION OF BUSINESS OR OTHER ECONOMIC LOSS.

---

## 6.12 Timers

CPU-Timers 0, 1, and 2 are identical 32-bit timers with presettable periods and with 16-bit clock prescaling. The timers have a 32-bit count-down register that generates an interrupt when the counter reaches zero. The counter is decremented at the CPU clock speed divided by the prescale value setting. When the counter reaches zero, it is automatically reloaded with a 32-bit period value.

CPU-Timer 0 is for general use and is connected to the PIE block. CPU-Timer 1 is also for general use and is connected to INT13 of the CPU. CPU-Timer 2 is reserved for TI-RTOS. It is connected to INT14 of the CPU. If TI-RTOS is not being used, CPU-Timer 2 is available for general use.

CPU-Timer 2 can be clocked by any one of the following:

- SYSCLK (default)
- Internal zero-pin oscillator 1 (INTOSC1)
- Internal zero-pin oscillator 2 (INTOSC2)
- X1 (XTAL)
- AUXPLLCLK

## 6.13 Nonmaskable Interrupt With Watchdog Timer (NMIWD)

The NMIWD module is used to handle system-level errors. There is an NMIWD module for each CPU. The conditions monitored are:

- Missing system clock due to oscillator failure
- Uncorrectable ECC error on CPU access to flash memory
- Uncorrectable ECC error on CPU, CLA, or DMA access to RAM
- Vector fetch error on the other CPU
- CPU1 only: Watchdog or NMI watchdog reset on CPU2

If the CPU does not respond to the latched error condition, then the NMI watchdog will trigger a reset after a programmable time interval. The default time is 65536 SYSCLK cycles.


版权 © 2013–2020, Texas Instruments Incorporated

## 6.14 Watchdog

The watchdog module is the same as the one on previous TMS320C2000™ MCUs, but with an optional lower limit on the time between software resets of the counter. This windowed countdown is disabled by default, so the watchdog is fully backwards-compatible.

The watchdog generates either a reset or an interrupt. It is clocked from the internal oscillator with a selectable frequency divider.

图 6-5 shows the various functional blocks within the watchdog module.

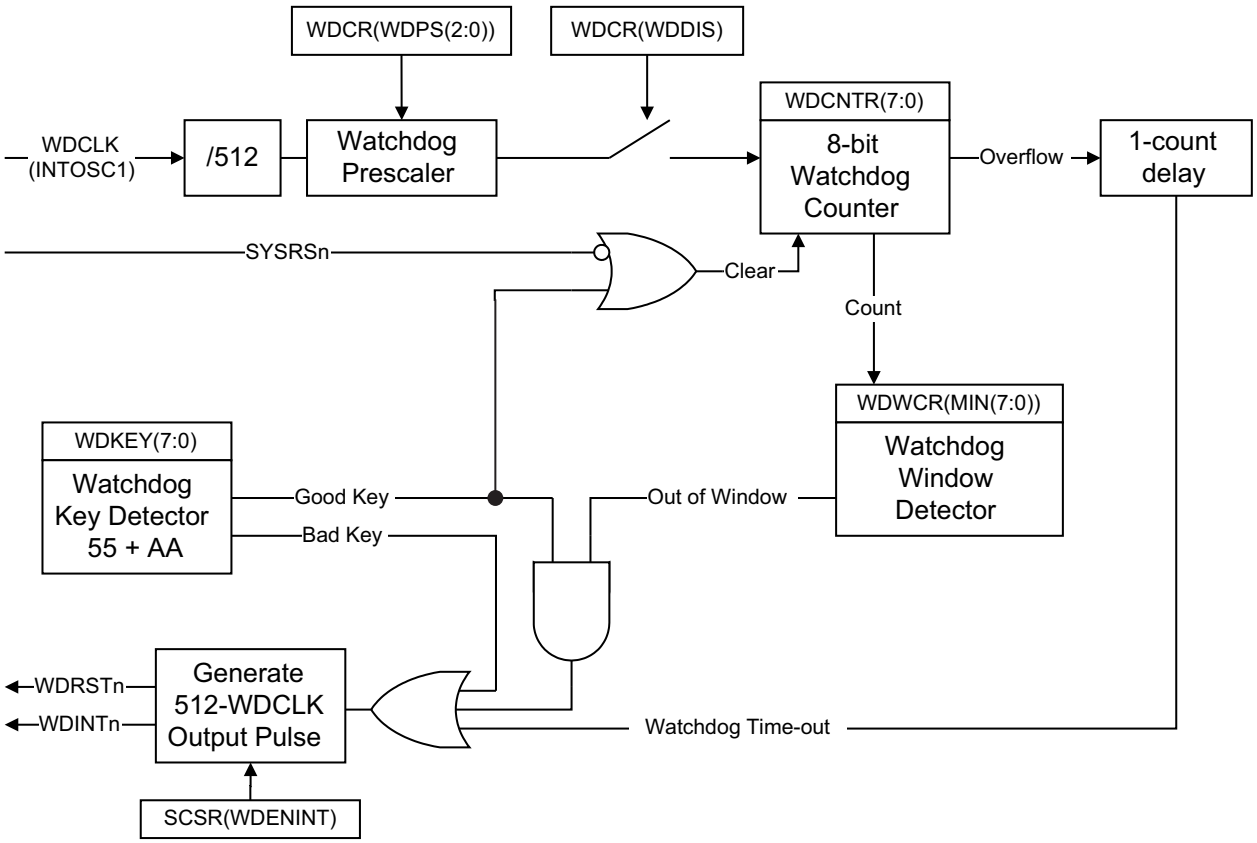


**图 6-5. Windowed Watchdog**

## 6.15 Configurable Logic Block (CLB)

The C2000 configurable logic block (CLB) is a collection of blocks that can be interconnected using software to implement custom digital logic functions or enhance existing on-chip peripherals. The CLB is able to enhance existing peripherals through a set of crossbar interconnections, which provide a high level of connectivity to existing control peripherals such as enhanced pulse width modulators (ePWM), enhanced capture modules (eCAP), and enhanced quadrature encoder pulse modules (eQEP). The crossbars also allow the CLB to be connected to external GPIO pins. In this way, the CLB can be configured to interact with device peripherals to perform small logical functions such as comparators, or to implement custom serial data exchange protocols. Through the CLB, functions that would otherwise be accomplished using external logic devices can now be implemented inside the MCU.

The CLB peripheral is configured through the CLB tool. For more information on the CLB tool, available examples, application reports and users guide, please refer to the following location in your C2000Ware package (C2000Ware_2_00_00_03 and higher):

**C2000WARE_INSTALL_LOCATION\utilities\clb_tool\clb_syscfg\doc**

CLB Tool User Guide

How to Design with the C2000™ CLB Application Report

How to Migrate Custom Logic From an FPGA/CPLD to C2000™ CLB Application Report

The CLB module and its interconnects are shown in 图 6-6.


版权 © 2013–2020, Texas Instruments Incorporated

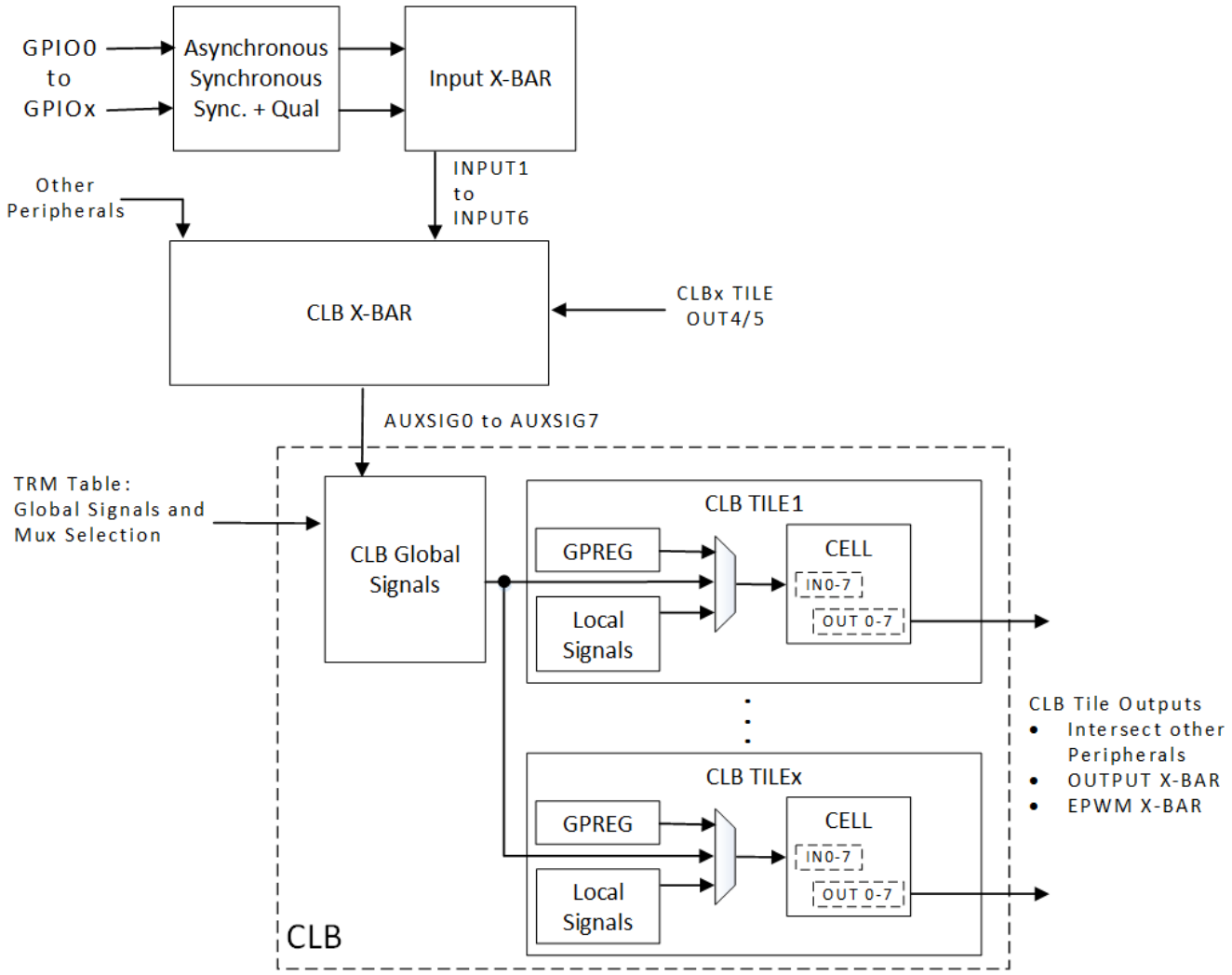


**图 6-6. CLB Overview**

Absolute encoder protocol interfaces are now provided as Position Manager solutions in the C2000Ware MotorControl SDK. Configuration files, application programmer interface (API), and use examples for such solutions are provided with C2000Ware MotorControl SDK. In some solutions, the TI-configured CLB is used with other on-chip resources, such as the SPI port or the C28x CPU, to perform more complex functionality. See Table 3-1 for the devices that support the CLB feature.

## 6.16 Functional Safety

TMS320C2000™ MCUs are equipped with a TI release validation-based C28x and CLA Compiler Qualification Kit (CQ-Kit), which is available for free and may be requested at the SafeTI Compiler Qualification Kit web page.

Additionally, C2000™ MCUs are supported by the TI C2000 Support from Embedded Coder from MathWorks® to generate C2000-optimized code from a Simulink® model. Simulink® enables Model-Based Design to ease the systematic compliance process with certified tools, including Embedded Coder®, Simulink® model verification tools, Polyspace® code verification tools, and the IEC Certification Kit for ISO 26262 and IEC 61508 compliance. For more information, see the How to Use Simulink for ISO 26262 Projects article.

The *Error Detection in SRAM Application Report* provides technical information about the nature of the SRAM bit cell and bit array, as well as the sources of SRAM failures. It then presents methods for managing memory failures in electronic systems. This discussion is intended for electronic system developers or integrators who are interested in improving the robustness of the embedded SRAM.

Functional safety-compliant products are developed using an ISO 26262/IEC 61508-compliant hardware development process that is independently assessed and certified to meet ASIL D/SIL 3 systematic capability (see certificate). The TMS320F2837D, TMS320F2837xS, and TMS320F2807x MCUs have been certified to meet a component-level random hardware capability of ASIL B/SIL 2 (see certificate).

The Functional Safety Compliant enablers include:

- A Functional Safety Manual
- A detailed, tunable, quantitative Failure Modes, Effects, and Diagnostics Analysis (FMEDA)
- A software diagnostic library that will help shorten the time to implement various software safety mechanisms
- A CLA Self-Test Library (STL) that ensures >90% Diagnostic Coverage for permanent faults
- A collection of application reports to help in the development of functionally safe systems.

A functional safety manual that describes all of the hardware and software functional safety mechanisms is available. See the *Safety Manual for TMS320F2837xD, TMS320F2837xS, and TMS320F2807x*.

A detailed, tunable, fault-injected, quantitative FMEDA that enables the calculation of random hardware metrics—as outlined in the International Organization for Standardization ISO 26262 and the International Electrotechnical Commission IEC 61508 for automotive and industrial applications, respectively—is also available. This tunable FMEDA must be requested; see the *C2000™ SafeTI Package for Automotive and Industrial MCUs User's Guide*.

- A white paper outlining the value (or benefit) of a tunable FMEDA is available. See the *SafeTI Functional Safety: A tunable FMEDA for C2000™ MCUs* publication.
- Parts 1 and 2 of a five-part FMEDA tuning training are available. See the C2000™ SafeTI Tunable FMEDA Training page.
  Parts 3, 4, and 5 are packaged with the tunable FMEDA, and must be requested.

The C2000 SafeTI Diagnostic Software Library is a collection of different safety mechanisms designed to detect faults. These safety mechanisms target different device components, including the C28x core, the control law accelerator (CLA), system control, static random access memory (SRAM), flash, and communications and control peripherals. The software safety mechanisms leverage available hardware safety features such as the C28x hardware built-in self-test (HWBIST); error detection and correction functionality on memories; parallel signature analysis circuitry; missing clock detection logic; watchdog counters; and hardware redundancy.

Also included are software functional safety manual, user guides, example projects, and source code to help users shorten system integration time. The library package includes a compliance support package (CSP), a series of documents that TI used to develop and test the diagnostic software library. The CSP provides the necessary documentation and reports to assist users with compliance to functional safety standards: software safety requirements specifications; a software architecture document; software


版权 © 2013–2020, Texas Instruments Incorporated

module design documents; software module unit test plans; software module unit test documents; static analysis reports; unit test reports; dynamic analysis reports; functional test reports; and traceability documents. Users can use these documents to comply with route 1s (as described in IEC 61508-3, section 7.4.2.12) to reuse a preexisting software element to implement all or part of a safety function. The contents of the CSP could also help users make important decisions for overall system safety compliance.

A Control Law Accelerator Self-Test Library (STL) (at the C2000 SafeTI Diagnostic Software Library page) is specifically designed, developed, tested, assessed, and approved to meet > 90% diagnostic coverage of the CLA processing element. The CLA STL enables customers to use the CLA in their functionally safe control systems by providing functional safety diagnostic measures for the CLA. The CLA STL allows customers concerned with functional safety to take advantage of the CLA, thus enabling greater processing power. The CLA STL software package includes the STL source code and library, as well as self-test application (STA) example and additional user guides. The user guides and STA example detail how to integrate the CLA diagnostic testing into functional safety customer application designs. Additionally, the *C2000™ CLA Self-Test Library Application Report* provides an overview and describes the system integration considerations of the CLA STL.

Two related application reports offer details about how to develop functionally safe systems with C2000 real-time control devices:

- *C2000™ Hardware Built-In Self-Test* discusses the HWBIST safety mechanism, along with its functions and features, in the F2807x/F2837xS/F2837xD series of C2000 devices. The report also addresses some system-level considerations when using the HWBIST feature and explains how customers can use the diagnostic library on their system.
- *C2000™ CPU Memory Built-In Self-Test* describes embedded memory validation using the C28x central processing unit (CPU) during an active control loop. It discusses system challenges to memory validation as well as the different solutions provided by C2000 devices and software. Finally, it presents the Diagnostic Library implementations for memory testing.

# 7 Applications, Implementation, and Layout

**注**

Information in the following sections is not part of the TI component specification, and TI does not warrant its accuracy or completeness. TI's customers are responsible for determining suitability of components for their purposes. Customers should validate and test their design implementation to confirm system functionality.

## 7.1 TI Reference Design

The TI Reference Design Library is a robust reference design library spanning analog, embedded processor, and connectivity. Created by TI experts to help you jump start your system design, all reference designs include schematic or block diagrams, BOMs, and design files to speed your time to market. Search and download designs at the Select TI reference designs page.

Industrial Servo Drive and AC Inverter Drive Reference Design
The DesignDRIVE Development Kit is a reference design for a complete industrial drive directly connecting to a three-phase ACI or PMSM motor. Many drive topologies can be created from the combined control, power, and communications technologies included on this single platform. This platform includes multiple position sensor interfaces, diverse current sensing techniques, hot-side partitioning options, and expansion for safety and industrial Ethernet.

Isolated Current Shunt and Voltage Measurement Reference Design for Motor Drives
This evaluation kit and reference design implement the AMC130x reinforced isolated delta-sigma modulators along with integrated Sinc filters in the C2000 TMS320F28377D microcontroller. The design provides an ability to evaluate the performance of these measurements: three motor currents, three inverter voltages, and the DC Link voltage. Provided in the kit is firmware to configure the Sinc filters, set the PLL frequency, and receive data from Sinc filters. A versatile run-time GUI is also provided to help the user validate the AMC130x performance and supports configuration changes to Sinc filter parameters in the TMS320F28377D controller.

Isolated, Shunt-Based Current Sensing Reference Design
This verified TI reference design implements an isolated current sensing data acqusition solution based on the AMC1304M25 isolated delta-sigma ($\Delta\Sigma$) modulator and a TMS320F28377D microcontroller. This circuit was designed for shunt-based current measurement applications, which require excellent galvanic isolation and accuracy, such as industrial motor drives, photovoltaic inverters, and energy metering. It is capable of measuring load currents from –10 A to +10 A with better than 0.3% uncalibrated accuracy, and it also provides dual functionality of a high-resolution channel and an additional overcurrent or short-circuit detection channel. The design's functionality and performance were verified against the circuit design goals by fabricating three PCBs and measuring results for dc and ac input signals.

Differential Signal Conditioning Circuit for Current and Voltage Measurement Using Fluxgate Sensors
This design provides a 4-channel signal conditioning solution for differential ADCs integrated into a microcontroller measuring motor current using fluxgate sensors. Also provided is an alternative measurement circuit with external differential SAR ADCs as well as circuits for high-speed overcurrent and earth fault detection. Proper differential signal conditioning improves noise immunity on critical current measurements in motor drives. This reference design can help increase the effective resolution of the analog-to-digital conversion, improving motor drive efficiency.


版权 © 2013–2020, Texas Instruments Incorporated

# 8 器件和文档支持

## 8.1 器件和开发支持工具命名规则

为了标明产品开发周期的阶段，TI 为所有 TMS320™MCU 器件和支持工具的器件型号指定前缀。每一个 TMS320 MCU 商用系列成员产品具有以下三个前缀中的一个：TMX、TMP 或者 TMS（例如，**TMS**320F28379D）。德州仪器 (TI) 建议为其支持的工具使用三个可用前缀指示符中的两个：TMDX 和 TMDS。这些前缀代表了产品从工程原型机（其中 TMX 针对器件，而 TMDX 针对工具）直到完全合格的生产器件和工具（其中 TMS 针对器件，而 TMDS 针对工具）的产品开发进化阶段。

器件开发进化流程：

**TMX** 试验器件，不一定代表最终器件的电气规格

**TMP** 最终硅片，符合器件的电气规格，但是未完成质量和可靠性验证

**TMS** 完全合格的生产器件

支持工具开发发展流程：

**TMDX** 还未经完整的德州仪器 (TI) 内部质量测试的开发支持工具

**TMDS** 完全合格的开发支持产品

TMX 和 TMP 器件和 TMDX 开发支持工具出货时带有如下的免责声明：
“开发产品用于内部评估用途。”

TMS 器件和 TMDS 开发支持工具已进行完全特性描述，并且器件的质量和可靠性已经完全论证。TI 的标准保修证书适用。

预测显示原型器件（TMX 或者 TMP）的故障率大于标准生产器件。由于它们的预计的最终使用故障率仍未定义，德州仪器建议不要将这些器件用于任何生产系统。只有合格的产品器件将被使用。

TI 器件的命名规则还包括一个带有器件系列名称的后缀。这个后缀包括封装类型（例如 PTP）和温度范围（如 T）。图 8-1 提供了解读任一系列产品成员完整器件名称的图例。

要获取器件型号以及更多订购信息，请访问 TI 网站 (www.ti.com.cn) 或者联系您的 TI 销售代表。

有关裸片器件命名规则标记的其他 说明 ，请参阅*《TMS320F2837xD 双核 MCU 器件勘误表》*。

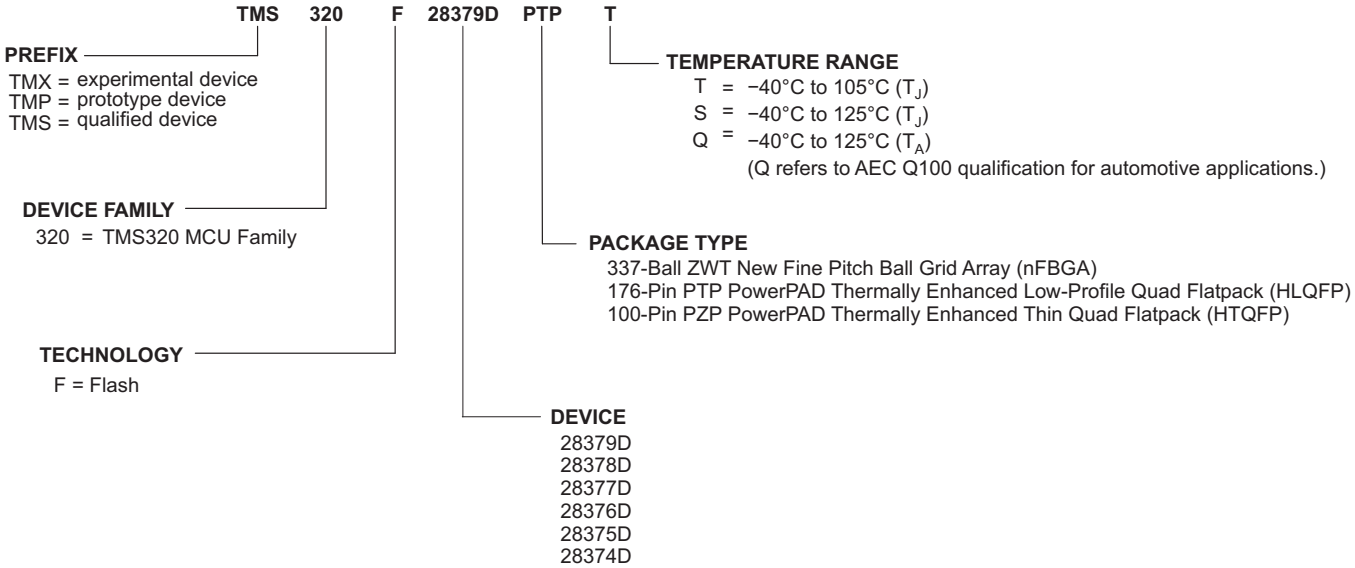


图 **8-1.** 器件命名规则

## 8.2 标记

图 8-2 提供了 2837xD 器件标记示例并定义了各个标记。您可以通过封装顶部所示的符号判断器件的修订版本，如 图 8-2 所示。一些原型器件的标记可能会与此处所示的标记有所不同。

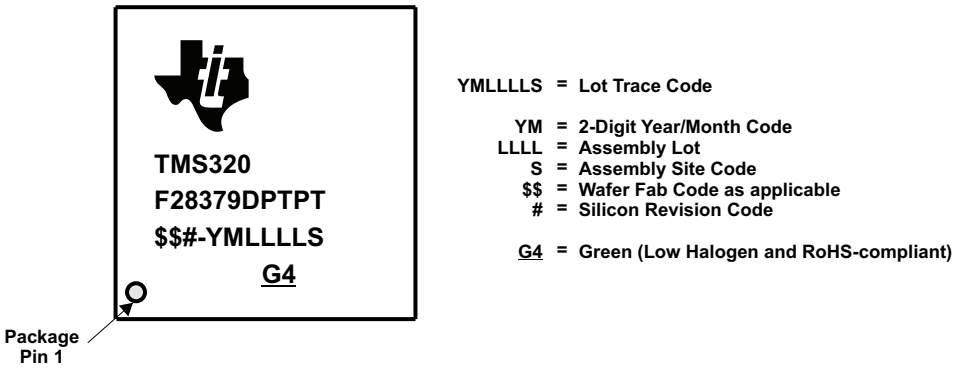


图 **8-2.** 器件标记示例

表 **8-1.** 根据批次追踪代码确定器件的修订版本

| 器件修订版本代码 | 器件修订版本 | 修订版本 ID[(1)]<br>地址：**0x5D00C** | 备注 |
|---|---|---|---|
| 空白 | 0 | 0x0000 | 该器件修订版本的代码为 TMX。 |
| A | A | 0x0000 | 该器件修订版本的代码为 TMX。 |
| B | B | 0x0002 | 该器件修订版本的代码为 TMX。 |
| C | C | 0x0003 | 该器件修订版本的代码为 TMS。 |

(1) 器件修订版本 ID


版权 © 2013–2020, Texas Instruments Incorporated

## 8.3 工具和软件

TI 提供大量的开发工具。下面列出了部分用于评估器件性能、生成代码和开发解决方案的工具和软件。要查看 C2000™ 实时控制 MCU 的所有可用工具和软件，请访问 C2000 实时控制 MCU - 设计和开发页面。

开发工具

用于 C2000 实时控制开发套件的 F28379D controlCARD
德州仪器 (TI) 提供的 F28379D controlCARD 支持位置管理器，是用于初期软件开发以及短期内构建系统原型、试验台和许多其他需要轻松获得高性能控制器的项目的理想产品。所有 C2000 controlCARD 均是使用 HSEC180 或 DIMM100 外形尺寸来提供薄型单板控制器解决方案的完整板级模块。主机系统只需为 controlCARD 提供单个 5V 电源轨，即可使其运行全部功能。

F28379D 实验套件
C2000™ MCU 实验套件提供了一个使用德州仪器 (TI) C2000 32 位微控制器系列进行实时、闭环控制开发的强大硬件原型设计平台。此平台作为一种非常出色的工具，可定制和验证众多常见电力电子 应用的解决方案，这些应用包括电机控制、数字电源、光伏逆变器、数字 LED 照明、精密传感等等。

软件工具

用于 C2000 MCU 的 C2000Ware
用于 C2000 微控制器的 C2000Ware 是一系列紧密结合的开发软件和文档，旨在最大限度地缩短软件开发时间。从特定于器件的驱动程序和库到器件外设示例，C2000Ware 能够为开始进行开发和评估提供坚实的基础。相较于 ™，目前推荐使用 C2000Ware 作为内容交付工具。 ControlSUITE™，建议使用 C2000Ware 作为内容交付工具。

用于 C2000 微控制器的 Code Composer Studio™ (CCS) 集成开发环境 (IDE)
Code Composer Studio 是支持 TI 的微控制器和嵌入式处理器产品系列的集成开发环境 (IDE)。Code Composer Studio 包含一整套用于开发和调试嵌入式应用 的工具的工具。它包含了优化的 C/C++ 编译器、源代码编辑器、项目构建环境、调试器、描述器以及其他多种 功能。直观的 IDE 提供了单一用户界面，可帮助用户完成应用开发流程的每个步骤。熟悉的工具和界面使用户能够比以前更快地入手。Code Composer Studio 将 Eclipse 软件框架的优点和 TI 先进的嵌入式调试功能相结合，为嵌入式开发人员提供了一种功能丰富的优异开发环境。

引脚多路复用工具
引脚多路复用实用程序是一款软件工具，可提供图形用户界面，用于配置引脚多路复用设置、解决冲突以及指定 TI MPU 的 I/O 单元特性。

F021 闪存应用编程接口
F021 闪存应用编程接口 (API) 提供的软件函数库可用于对 F021 片上闪存执行编程、擦除和验证操作。

UniFlash 独立闪存工具
UniFlash 是一个独立工具，用于通过 GUI、命令行或脚本接口对片上闪存进行编程。

### 模型

您可以从产品的“工具与软件”页面下载各种模型。这些模型包括 I/O 缓冲器信息规范 (IBIS) 模型和边界扫描说明 语言 (BSDL) 模型。要查看所有可用模型，请访问每个器件的“工具与软件”页面的“模型”部分，具体链接见 表 8-2。

### 培训

为了帮助设计工程师充分利用 C2000 微控制器 特性 和性能，TI 开发了各种培训资源。通过利用在线培训资料和可下载的实际操作技术讲座，可方便地获得 C2000 微控制器系列的全方位实际知识。这些培训资源旨在简化学习过程，同时缩短开发时间并加快产品上市速度。有关各种培训资源的更多信息，请访问 C2000™ 实时控制 MCU - 支持和培训站点。

有关具体的 F2837xD/F2837xS/F2807x 实践技术培训资源，请访问 C2000™ MCU 器件讲座。


版权 © 2013–2020, Texas Instruments Incorporated

## 8.4 文档支持

要接收文档更新通知，请导航至 TI.com.cn 上的器件产品文件夹。单击右上角的*通知我*进行注册，即可每周接收产品信息更改摘要。有关更改的详细信息，请查看任何已修订文档中包含的修订历史记录。

下面列出了介绍处理器、相关外设以及其他配套技术资料的最新文档。

勘误表

《TMS320F2837xD 双核 MCU 芯片勘误表》介绍了器件的已知问题并提供了权变措施。

技术参考手册

《TMS320F2837xD 双核微控制器技术参考手册》 详述了 2837xD 微控制器每个外设和子系统的集成、环境和功能 说明以及编程模型。

**CPU** 用户指南

《TMS320C28x CPU 和指令集参考指南》介绍了 TMS320C28x 定点数字信号处理器 (DSP) 的中央处理器 (CPU) 和汇编语言指令。此参考指南还介绍了上述 DSP 所 提供 的仿真特性。

《TMS320C28x 扩展指令集技术参考手册》介绍了 TMU、VCU-II 和 FPU 加速器的架构、流水线和指令集。

外设指南

《C2000 实时控制外设参考指南》介绍了 28x DSP 的外设参考指南。

工具指南

《TMS320C28x 汇编语言工具 v19.6.0.STS 用户指南》介绍了用于 TMS320C28x 器件的汇编语言工具（用于开发汇编语言代码的汇编器和其他工具）、汇编器指令、宏、通用目标文件格式和符号调试指令。

《TMS320C28x 优化 C/C++ 编译器 v19.6.0.STS 用户指南》介绍了 TMS320C28x C/C++ 编译器。此编译器接受 ANSI 标准 C/C++ 源代码，并为 TMS320C28x 器件生成 TMS320 DSP 汇编语言源代码。

应用报告

《半导体封装方法》介绍了准备向最终用户发货时半导体器件所用的封装方法。

《计算嵌入式处理器的有效使用寿命》介绍了如何计算 TI 嵌入式处理器 (EP) 在电子系统中运行时的有效使用寿命。本文档的目标读者为希望确定 TI EP 的可靠性是否符合终端系统可靠性要求的总工程师。

《IBIS（I/O 缓冲器信息规范）建模简介》讨论了 IBIS 的各个方面，包括其历史、优势、兼容性、模型生成流程、输入/输出结构建模中的数据要求以及未来趋势。

《C2000™ 微控制器串行闪存编程》介绍了如何使用闪存内核和 ROM 加载程序对器件进行串行编程。

## 8.5 相关链接

下表列出了快速访问链接。类别包括技术文档、支持和社区资源、工具和软件，以及立即订购快速访问。

表 **8-2.** 相关链接

| 器件 | 产品文件夹 | 立即订购 | 技术文档 | 工具和软件 | 支持和社区 |
|---|---|---|---|---|---|
| TMS320F28379D | 单击此处 | 单击此处 | 单击此处 | 单击此处 | 单击此处 |
| TMS320F28378D | 单击此处 | 单击此处 | 单击此处 | 单击此处 | 单击此处 |
| TMS320F28377D | 单击此处 | 单击此处 | 单击此处 | 单击此处 | 单击此处 |
| TMS320F28376D | 单击此处 | 单击此处 | 单击此处 | 单击此处 | 单击此处 |
| TMS320F28375D | 单击此处 | 单击此处 | 单击此处 | 单击此处 | 单击此处 |
| TMS320F28374D | 单击此处 | 单击此处 | 单击此处 | 单击此处 | 单击此处 |

## 8.6 Support Resources

TI E2E™ support forums are an engineer's go-to source for fast, verified answers and design help — straight from the experts. Search existing answers or ask your own question to get the quick design help you need.

Linked content is provided "AS IS" by the respective contributors. They do not constitute TI specifications and do not necessarily reflect TI's views; see TI's Terms of Use.

## 8.7 商标

PowerPAD, C2000, Code Composer Studio, TMS320C2000, TMS320, ControlSUITE, 用于 C2000 微控制器的 Code Composer Studio, E2E are trademarks of Texas Instruments.
Bosch is a registered trademark of Robert Bosch GmbH Corporation.
MathWorks, Simulink, Embedded Coder, Polyspace are registered trademarks of The MathWorks, Inc.
All other trademarks are the property of their respective owners.

## 8.8 静电放电警告

ESD 可能会损坏该集成电路。德州仪器 (TI) 建议通过适当的预防措施处理所有集成电路。如果不遵守正确的处理措施和安装程序，可能会损坏集成电路。

ESD 的损坏小至导致微小的性能降级，大至整个器件故障。 精密的集成电路可能更容易受到损坏，这是因为非常细微的参数更改都可能会导致器件与其发布的规格不相符。

## 8.9 Glossary

**TI Glossary** This glossary lists and explains terms, acronyms, and definitions.


版权 © 2013–2020, Texas Instruments Incorporated

# 9 机械、封装和可订购信息

## 9.1 封装信息

以下页面包含机械、封装和可订购信息。这些信息是指定器件的最新可用数据。数据如有变更，恕不另行通知，且不会对此文档进行修订。如需获取此数据表的浏览器版本，请查阅左侧的导航栏。

# PACKAGE OUTLINE

## PZP0100N

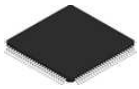

## PowerPAD™ TQFP - 1.2 mm max height

PLASTIC QUAD FLATPACK

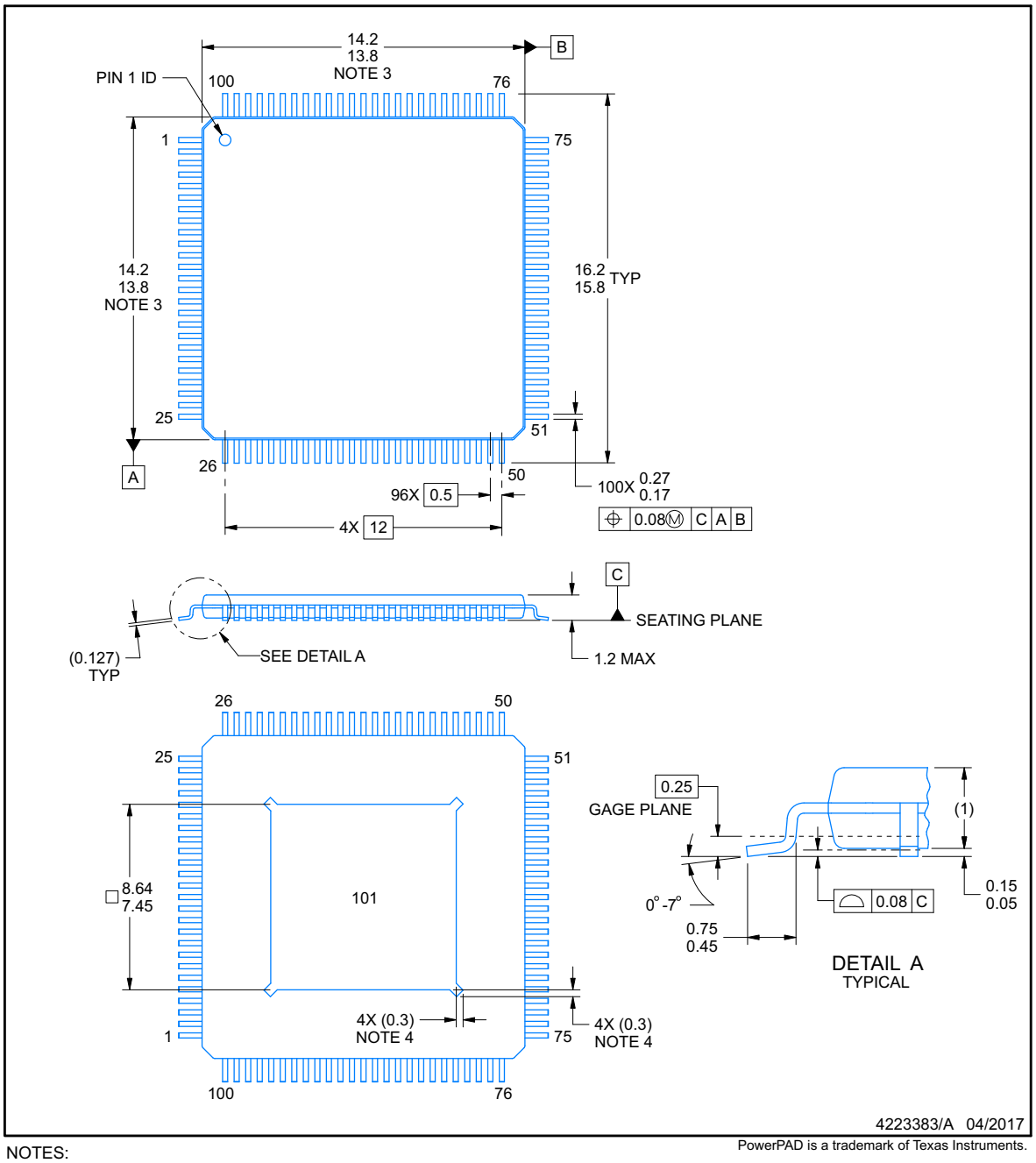


PowerPAD is a trademark of Texas Instruments.

NOTES:

1. All linear dimensions are in millimeters. Any dimensions in parenthesis are for reference only. Dimensioning and tolerancing per ASME Y14.5M.
2. This drawing is subject to change without notice.
3. This dimension does not include mold flash, protrusions, or gate burrs.
4. Strap features may not be present.
5. Reference JEDEC registration MS-026.


版权 © 2013–2020, Texas Instruments Incorporated

## EXAMPLE BOARD LAYOUT

**PZP0100N** — **PowerPAD™ TQFP - 1.2 mm max height**

PLASTIC QUAD FLATPACK

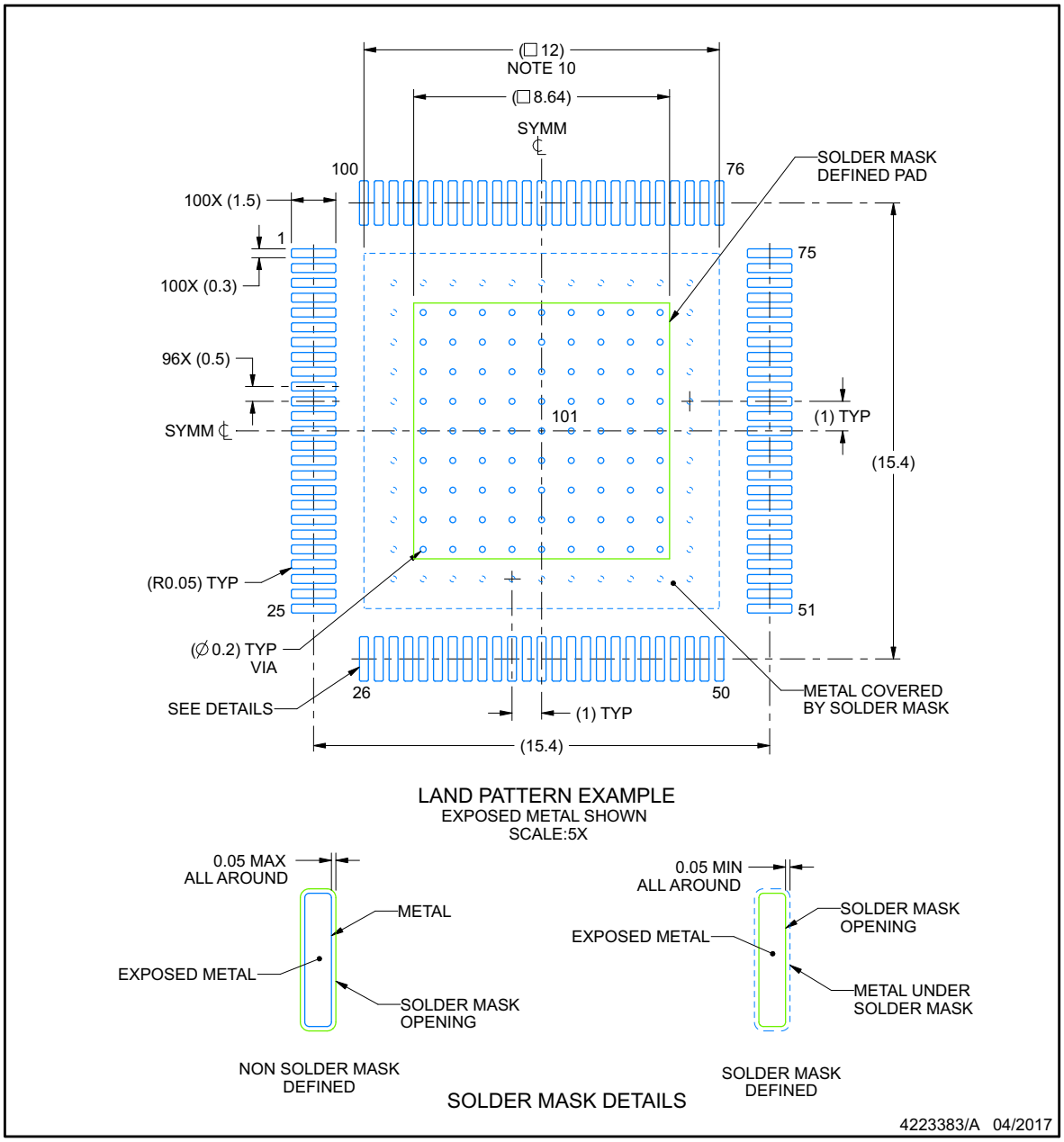


NOTES: (continued)

6. Publication IPC-7351 may have alternate designs.
7. Solder mask tolerances between and around signal pads can vary based on board fabrication site.
8. This package is designed to be soldered to a thermal pad on the board. See technical brief, Powerpad thermally enhanced package, Texas Instruments Literature No. SLMA002 (www.ti.com/lit/slma002) and SLMA004 (www.ti.com/lit/slma004).
9. Vias are optional depending on application, refer to device data sheet. It is recommended that vias under paste be filled, plugged or tented.
10. Size of metal pad may vary due to creepage requirement.



版权 © 2013–2020, Texas Instruments Incorporated

## EXAMPLE STENCIL DESIGN

**PZP0100N** **PowerPAD™ TQFP - 1.2 mm max height**

PLASTIC QUAD FLATPACK

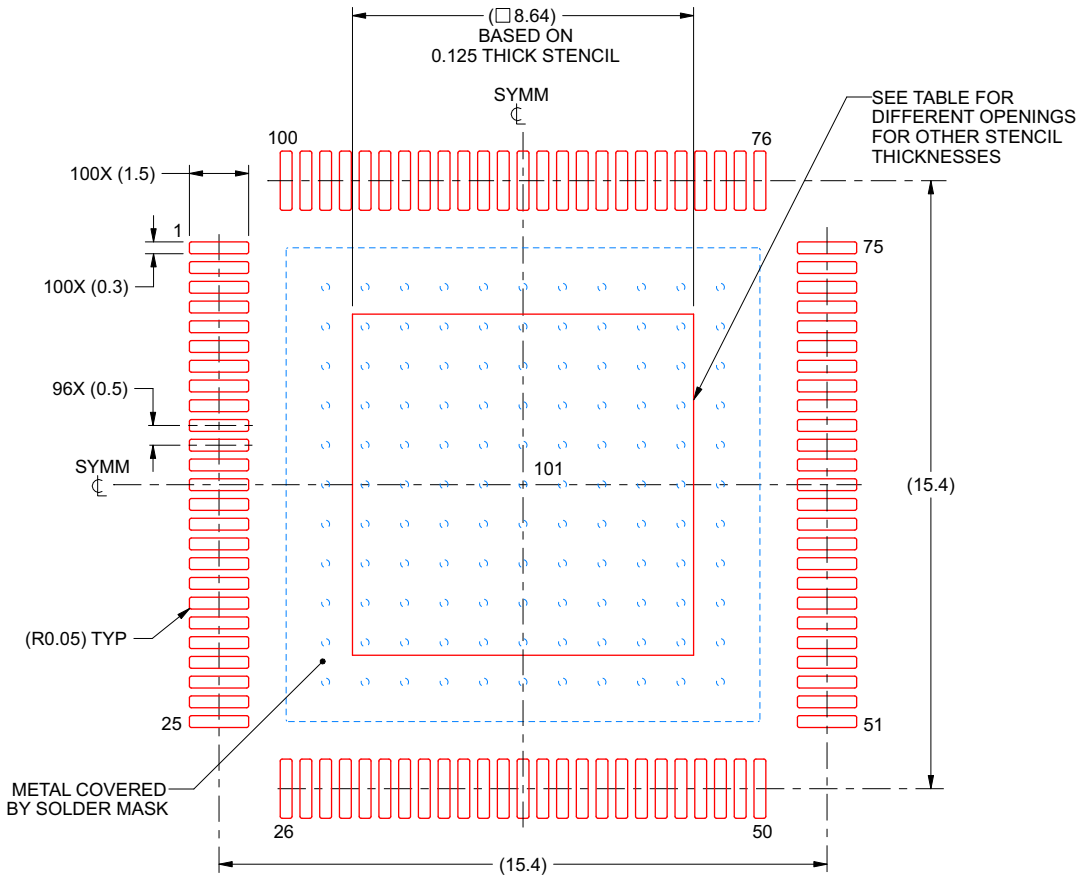


SOLDER PASTE EXAMPLE
EXPOSED PAD
100% PRINTED SOLDER COVERAGE BY AREA
SCALE:6X

| STENCIL THICKNESS | SOLDER STENCIL OPENING |
|---|---|
| 0.1 | 9.66 X 9.66 |
| 0.125 | 8.64 X 8.64 (SHOWN) |
| 0.150 | 7.89 X 7.89 |
| 0.175 | 7.3 X 7.3 |

4223383/A 04/2017

NOTES: (continued)

11. Laser cutting apertures with trapezoidal walls and rounded corners may offer better paste release. IPC-7525 may have alternate design recommendations.
12. Board assembly site may have different recommendations for stencil design.


版权 © 2013–2020, Texas Instruments Incorporated

# PACKAGE OUTLINE

## PTP0176F

## PowerPAD™ HLQFP - 1.6 mm max height

PLASTIC QUAD FLATPACK

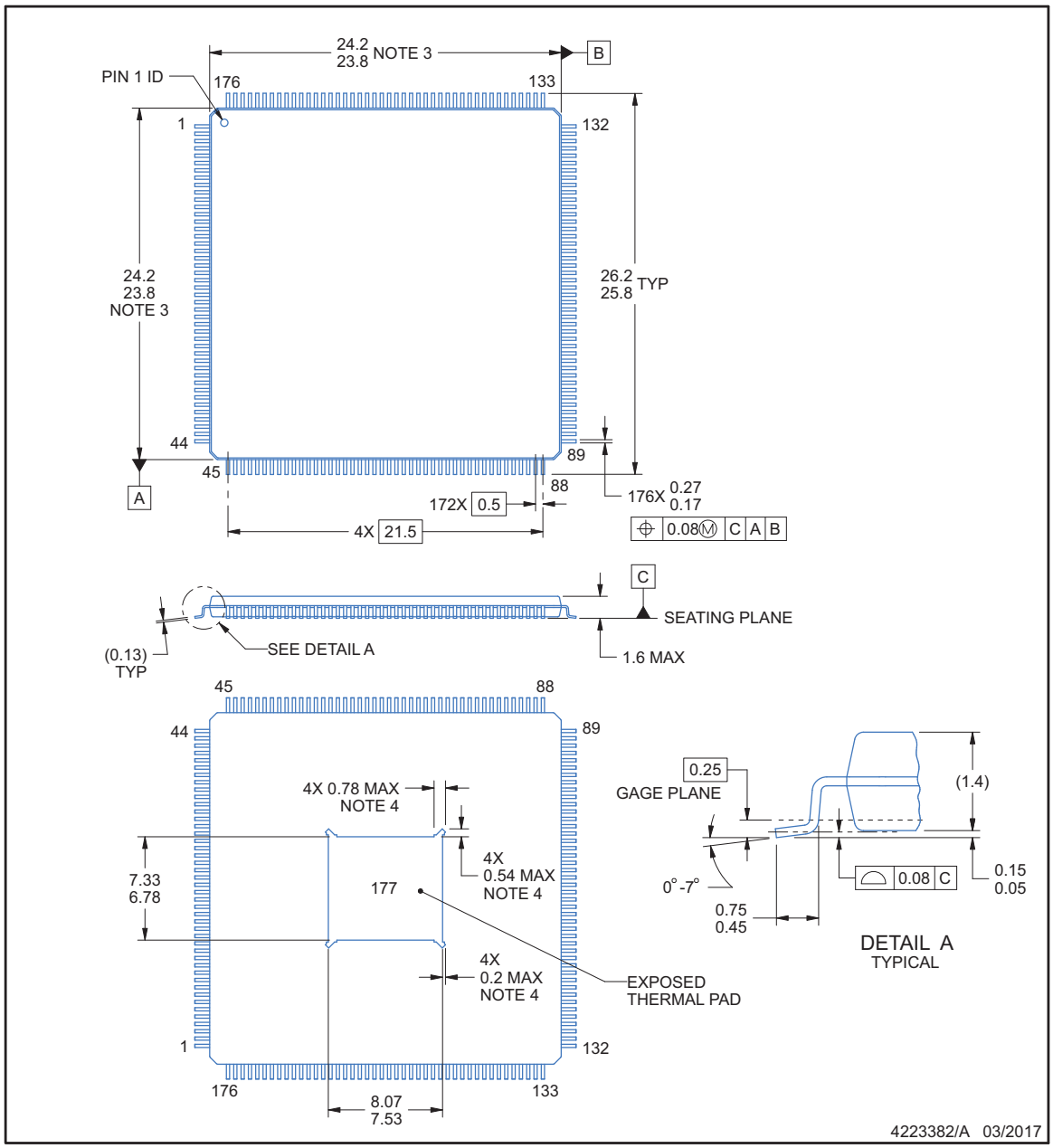


PowerPAD is a trademark of Texas Instruments.

NOTES:

1. All linear dimensions are in millimeters. Any dimensions in parenthesis are for reference only. Dimensioning and tolerancing per ASME Y14.5M.
2. This drawing is subject to change without notice.
3. This dimension does not include mold flash, protrusions, or gate burrs.
4. Strap features my not present.
5. Reference JEDEC registration MS-026.



版权 © 2013–2020, Texas Instruments Incorporated

# EXAMPLE BOARD LAYOUT

## PTP0176F

## PowerPAD™ HLQFP - 1.6 mm max height

PLASTIC QUAD FLATPACK

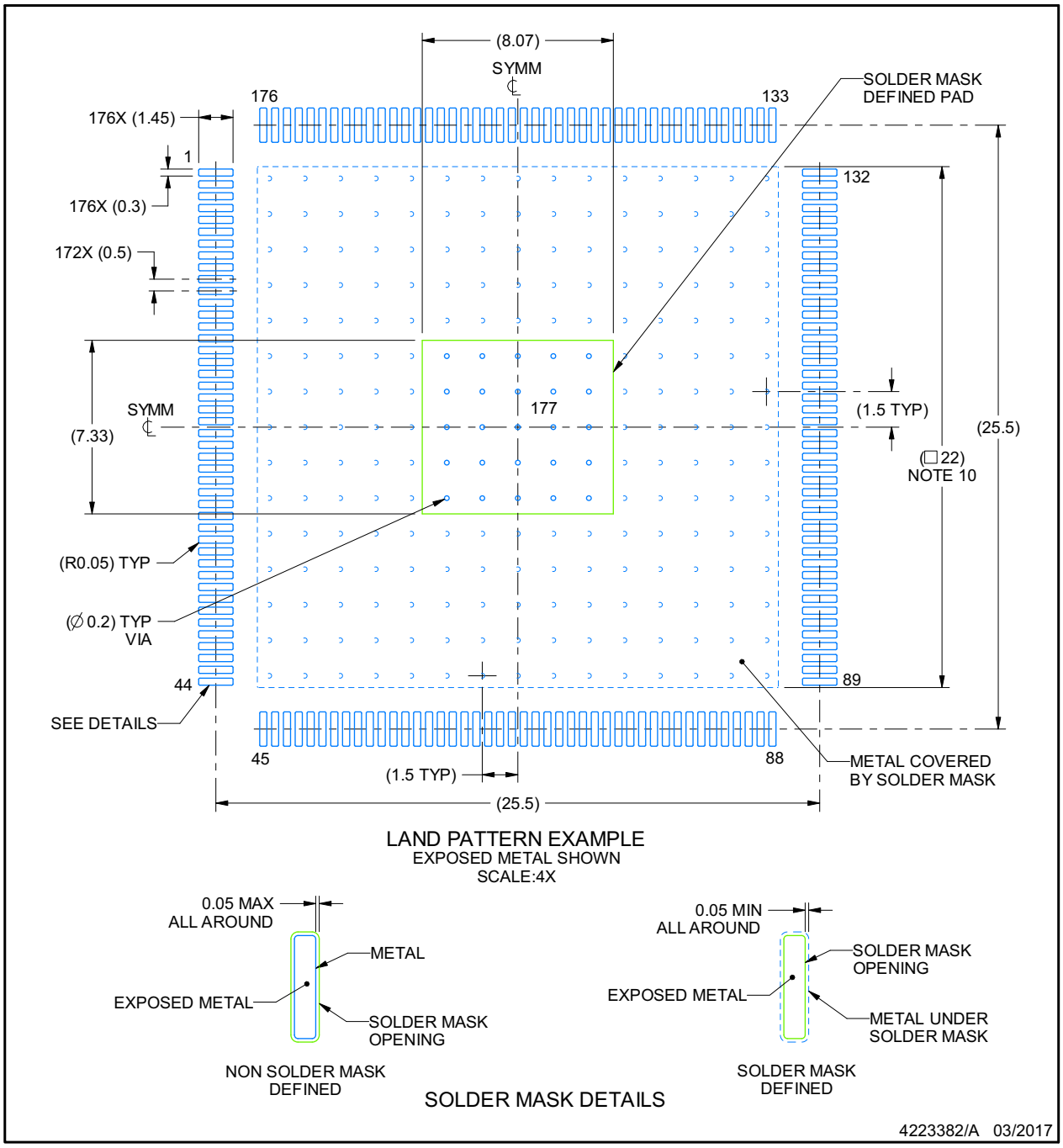


NOTES: (continued)

6. Publication IPC-7351 may have alternate designs.
7. Solder mask tolerances between and around signal pads can vary based on board fabrication site.
8. This package is designed to be soldered to a thermal pad on the board. See technical brief, Powerpad thermally enhanced package, Texas Instruments Literature No. SLMA002 (www.ti.com/lit/slma002) and SLMA004 (www.ti.com/lit/slma004).
9. Vias are optional depending on application, refer to device data sheet. It is recommended that vias under paste be filled, plugged or tented.
10. Size of metal pad may vary due to creepage requirement.


版权 © 2013–2020, Texas Instruments Incorporated

## EXAMPLE STENCIL DESIGN

**PTP0176F** **PowerPAD™ HLQFP - 1.6 mm max height**

PLASTIC QUAD FLATPACK

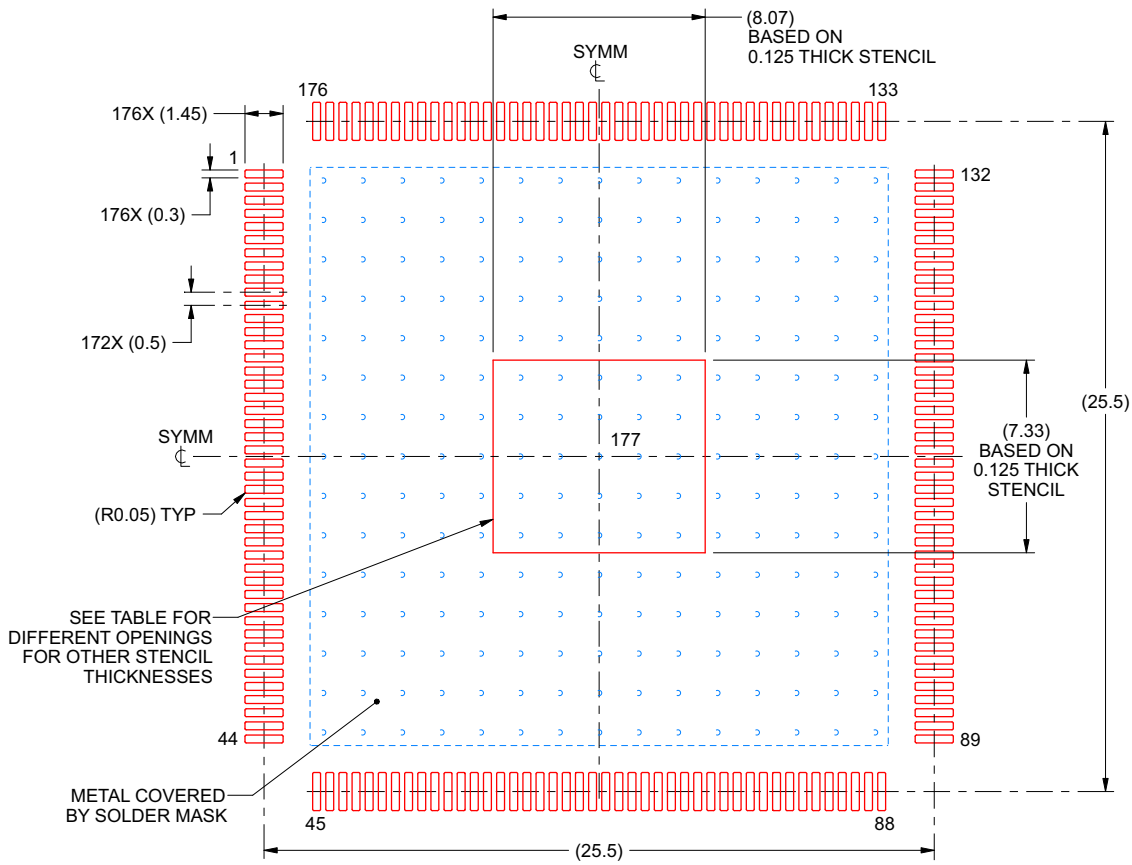


SOLDER PASTE EXAMPLE
EXPOSED PAD
100% PRINTED SOLDER COVERAGE BY AREA
SCALE:4X

| STENCIL THICKNESS | SOLDER STENCIL OPENING |
|---|---|
| 0.1 | 9.02 X 8.2 |
| 0.125 | 8.07 X 7.33 (SHOWN) |
| 0.150 | 7.37 X 6.69 |
| 0.175 | 6.82 X 6.2 |

4223382/A 03/2017

NOTES: (continued)

11. Laser cutting apertures with trapezoidal walls and rounded corners may offer better paste release. IPC-7525 may have alternate design recommendations.
12. Board assembly site may have different recommendations for stencil design.



版权 © 2013–2020, Texas Instruments Incorporated

## PACKAGING INFORMATION

| Orderable Device | Status (1) | Package Type | Package Drawing | Pins | Package Qty | Eco Plan (2) | Lead finish/ Ball material (6) | MSL Peak Temp (3) | Op Temp (°C) | Device Marking (4/5) | Samples |
|---|---|---|---|---|---|---|---|---|---|---|---|
| TMS320F28374DPTPS | ACTIVE | HLQFP | PTP | 176 | 40 | RoHS & Green | NIPDAU | Level-3-260C-168 HR | -40 to 125 | TMS320 F28374DPTPS | Samples |
| TMS320F28374DPTPT | ACTIVE | HLQFP | PTP | 176 | 40 | RoHS & Green | NIPDAU | Level-3-260C-168 HR | -40 to 105 | TMS320 F28374DPTPT | Samples |
| TMS320F28374DZWTS | ACTIVE | NFBGA | ZWT | 337 | 90 | RoHS & Green | SNAGCU | Level-3-260C-168 HR | -40 to 125 | TMS320 F28374DZWTS | Samples |
| TMS320F28374DZWTT | ACTIVE | NFBGA | ZWT | 337 | 90 | RoHS & Green | SNAGCU | Level-3-260C-168 HR | -40 to 105 | TMS320 F28374DZWTT | Samples |
| TMS320F28375DPTPS | ACTIVE | HLQFP | PTP | 176 | 40 | RoHS & Green | NIPDAU | Level-3-260C-168 HR | -40 to 125 | TMS320 F28375DPTPS | Samples |
| TMS320F28375DPTPT | ACTIVE | HLQFP | PTP | 176 | 40 | RoHS & Green | NIPDAU | Level-3-260C-168 HR | -40 to 105 | TMS320 F28375DPTPT | Samples |
| TMS320F28375DPZPS | ACTIVE | HTQFP | PZP | 100 | 90 | RoHS & Green | NIPDAU | Level-3-260C-168 HR | -40 to 125 | TMS320 F28375DPZPS | Samples |
| TMS320F28375DZWTS | ACTIVE | NFBGA | ZWT | 337 | 90 | RoHS & Green | SNAGCU | Level-3-260C-168 HR | -40 to 125 | TMS320 F28375DZWTS | Samples |
| TMS320F28375DZWTT | ACTIVE | NFBGA | ZWT | 337 | 90 | RoHS & Green | SNAGCU | Level-3-260C-168 HR | -40 to 105 | TMS320 F28375DZWTT | Samples |
| TMS320F28376DPTPS | ACTIVE | HLQFP | PTP | 176 | 40 | RoHS & Green | NIPDAU | Level-3-260C-168 HR | -40 to 125 | TMS320 F28376DPTPS | Samples |
| TMS320F28376DPTPT | ACTIVE | HLQFP | PTP | 176 | 40 | RoHS & Green | NIPDAU | Level-3-260C-168 HR | -40 to 105 | TMS320 F28376DPTPT | Samples |
| TMS320F28376DZWTS | ACTIVE | NFBGA | ZWT | 337 | 90 | RoHS & Green | SNAGCU | Level-3-260C-168 HR | -40 to 125 | TMS320 F28376DZWTS | Samples |
| TMS320F28376DZWTT | ACTIVE | NFBGA | ZWT | 337 | 90 | RoHS & Green | SNAGCU | Level-3-260C-168 HR | -40 to 105 | TMS320 F28376DZWTT | Samples |
| TMS320F28377DPTPQ | ACTIVE | HLQFP | PTP | 176 | 40 | RoHS & Green | NIPDAU | Level-3-260C-168 HR | -40 to 125 | TMS320 F28377DPTPQ | Samples |
| TMS320F28377DPTPS | ACTIVE | HLQFP | PTP | 176 | 40 | RoHS & Green | NIPDAU | Level-3-260C-168 HR | -40 to 125 | TMS320 F28377DPTPS | Samples |
| TMS320F28377DPTPT | ACTIVE | HLQFP | PTP | 176 | 40 | RoHS & Green | NIPDAU | Level-3-260C-168 HR | -40 to 105 | TMS320 F28377DPTPT | Samples |
| TMS320F28377DZWTQ | ACTIVE | NFBGA | ZWT | 337 | 90 | RoHS & Green | SNAGCU | Level-3-260C-168 HR | -40 to 125 | TMS320 | Samples |

| Orderable Device | Status (1) | Package Type | Package Drawing | Pins | Package Qty | Eco Plan (2) | Lead finish/ Ball material (6) | MSL Peak Temp (3) | Op Temp (°C) | Device Marking (4/5) | Samples |
|---|---|---|---|---|---|---|---|---|---|---|---|
| | | | | | | | | | | F28377DZWTQ | |
| TMS320F28377DZWTQR | ACTIVE | NFBGA | ZWT | 337 | 1000 | RoHS & Green | SNAGCU | Level-3-260C-168 HR | -40 to 125 | TMS320 F28377DZWTQ | Samples |
| TMS320F28377DZWTS | ACTIVE | NFBGA | ZWT | 337 | 90 | RoHS & Green | SNAGCU | Level-3-260C-168 HR | -40 to 125 | TMS320 F28377DZWTS | Samples |
| TMS320F28377DZWTT | ACTIVE | NFBGA | ZWT | 337 | 90 | RoHS & Green | SNAGCU | Level-3-260C-168 HR | -40 to 105 | TMS320 F28377DZWTT | Samples |
| TMS320F28378DPTPS | ACTIVE | HLQFP | PTP | 176 | 40 | RoHS & Green | NIPDAU | Level-3-260C-168 HR | -40 to 125 | TMS320 F28378DPTPS | Samples |
| TMS320F28379DPTPQ | ACTIVE | HLQFP | PTP | 176 | 40 | RoHS & Green | NIPDAU | Level-3-260C-168 HR | -40 to 125 | TMS320 F28379DPTPQ | Samples |
| TMS320F28379DPTPS | ACTIVE | HLQFP | PTP | 176 | 40 | RoHS & Green | NIPDAU | Level-3-260C-168 HR | -40 to 125 | TMS320 F28379DPTPS | Samples |
| TMS320F28379DPTPT | ACTIVE | HLQFP | PTP | 176 | 40 | RoHS & Green | NIPDAU | Level-3-260C-168 HR | -40 to 105 | TMS320 F28379DPTPT | Samples |
| TMS320F28379DZWTQR | ACTIVE | NFBGA | ZWT | 337 | 1000 | RoHS & Green | SNAGCU | Level-3-260C-168 HR | -40 to 125 | TMS320 F28379DZWTQ | Samples |
| TMS320F28379DZWTS | ACTIVE | NFBGA | ZWT | 337 | 90 | RoHS & Green | SNAGCU | Level-3-260C-168 HR | -40 to 125 | TMS320 F28379DZWTS | Samples |
| TMS320F28379DZWTT | ACTIVE | NFBGA | ZWT | 337 | 90 | RoHS & Green | SNAGCU | Level-3-260C-168 HR | -40 to 105 | TMS320 F28379DZWTT | Samples |

(1) The marketing status values are defined as follows:
**ACTIVE:** Product device recommended for new designs.
**LIFEBUY:** TI has announced that the device will be discontinued, and a lifetime-buy period is in effect.
**NRND:** Not recommended for new designs. Device is in production to support existing customers, but TI does not recommend using this part in a new design.
**PREVIEW:** Device has been announced but is not in production. Samples may or may not be available.
**OBSOLETE:** TI has discontinued the production of the device.

(2) **RoHS:** TI defines "RoHS" to mean semiconductor products that are compliant with the current EU RoHS requirements for all 10 RoHS substances, including the requirement that RoHS substance do not exceed 0.1% by weight in homogeneous materials. Where designed to be soldered at high temperatures, "RoHS" products are suitable for use in specified lead-free processes. TI may reference these types of products as "Pb-Free".
**RoHS Exempt:** TI defines "RoHS Exempt" to mean products that contain lead but are compliant with EU RoHS pursuant to a specific EU RoHS exemption.
**Green:** TI defines "Green" to mean the content of Chlorine (Cl) and Bromine (Br) based flame retardants meet JS709B low halogen requirements of <=1000ppm threshold. Antimony trioxide based flame retardants must also meet the <=1000ppm threshold requirement.

(3) MSL, Peak Temp. - The Moisture Sensitivity Level rating according to the JEDEC industry standard classifications, and peak solder temperature.

(4) There may be additional marking, which relates to the logo, the lot trace code information, or the environmental category on the device.

(5) Multiple Device Markings will be inside parentheses. Only one Device Marking contained in parentheses and separated by a "~" will appear on a device. If a line is indented then it is a continuation of the previous line and the two combined represent the entire Device Marking for that device.

(6) Lead finish/Ball material - Orderable Devices may have multiple material finish options. Finish options are separated by a vertical ruled line. Lead finish/Ball material values may wrap to two lines if the finish value exceeds the maximum column width.

**Important Information and Disclaimer:**The information provided on this page represents TI's knowledge and belief as of the date that it is provided. TI bases its knowledge and belief on information provided by third parties, and makes no representation or warranty as to the accuracy of such information. Efforts are underway to better integrate information from third parties. TI has taken and continues to take reasonable steps to provide representative and accurate information but may not have conducted destructive testing or chemical analysis on incoming materials and chemicals. TI and TI suppliers consider certain information to be proprietary, and thus CAS numbers and other limited information may not be available for release.

In no event shall TI's liability arising out of such information exceed the total purchase price of the TI part(s) at issue in this document sold by TI to Customer on an annual basis.

**OTHER QUALIFIED VERSIONS OF TMS320F28377D, TMS320F28377D-Q1, TMS320F28379D, TMS320F28379D-Q1 :**

- Catalog : TMS320F28377D, TMS320F28379D
- Automotive : TMS320F28377D-Q1, TMS320F28379D-Q1
- Enhanced Product : TMS320F28377D-EP, TMS320F28377D-EP

NOTE: Qualified Version Definitions:

- Catalog - TI's standard catalog product
- Automotive - Q100 devices qualified for high-reliability automotive applications targeting zero defects
- Enhanced Product - Supports Defense, Aerospace and Medical Applications

## TRAY

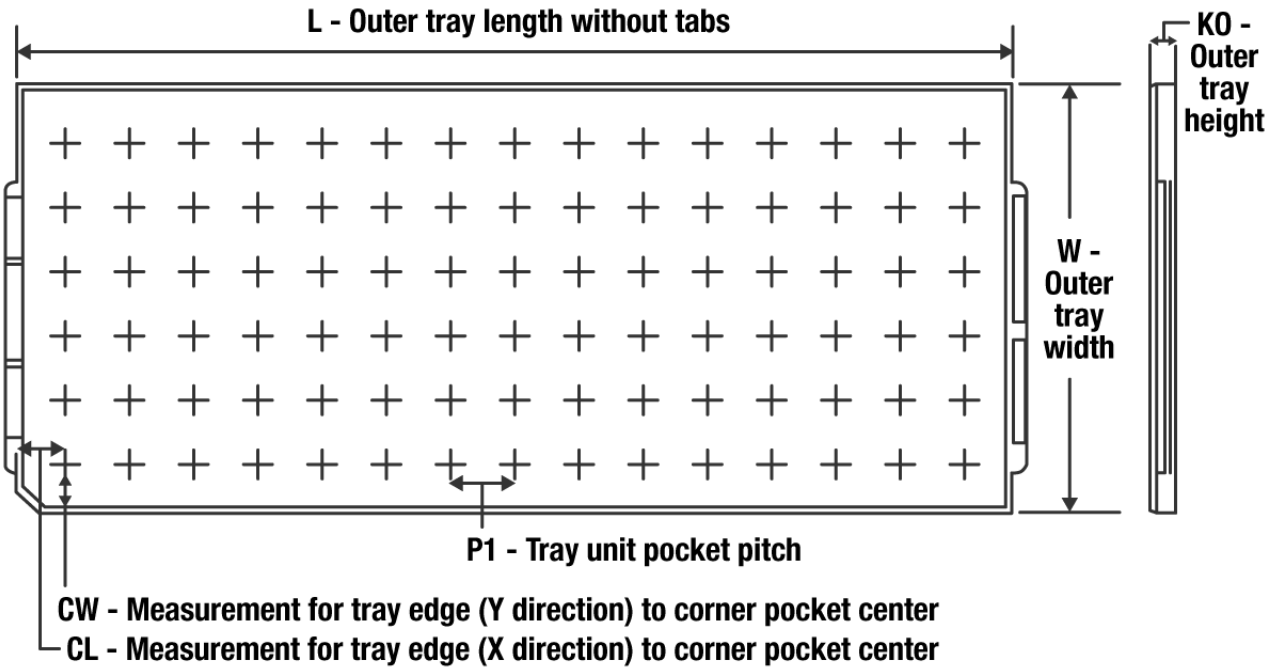


Chamfer on Tray corner indicates Pin 1 orientation of packed units.

*All dimensions are nominal

| Device | Package Name | Package Type | Pins | SPQ | Unit array matrix | Max temperature (°C) | L (mm) | W (mm) | K0 (µm) | P1 (mm) | CL (mm) | CW (mm) |
|---|---|---|---|---|---|---|---|---|---|---|---|---|
| TMS320F28374DPTPT | PTP | HLQFP | 176 | 40 | 4x10 | 150 | 315 | 135.9 | 7620 | 20.7 | 30.4 | 20.7 |
| TMS320F28375DPTPT | PTP | HLQFP | 176 | 40 | 4x10 | 150 | 315 | 135.9 | 7620 | 20.7 | 30.4 | 20.7 |
| TMS320F28375DPZPS | PZP | HTQFP | 100 | 90 | 6 X 15 | 150 | 315 | 135.9 | 7620 | 15.4 | 20.3 | 21 |
| TMS320F28375DZWTT | ZWT | NFBGA | 337 | 90 | 6 X 15 | 150 | 315 | 135.9 | 7620 | 20 | 17.5 | 15.45 |
| TMS320F28377DPTPQ | PTP | HLQFP | 176 | 40 | 4x10 | 150 | 315 | 135.9 | 7620 | 20.7 | 30.4 | 20.7 |
| TMS320F28377DPTPS | PTP | HLQFP | 176 | 40 | 4x10 | 150 | 315 | 135.9 | 7620 | 20.7 | 30.4 | 20.7 |
| TMS320F28377DPTPT | PTP | HLQFP | 176 | 40 | 4x10 | 150 | 315 | 135.9 | 7620 | 20.7 | 30.4 | 20.7 |
| TMS320F28377DZWTQ | ZWT | NFBGA | 337 | 90 | 6 X 15 | 150 | 315 | 135.9 | 7620 | 20 | 17.5 | 15.45 |
| TMS320F28377DZWTS | ZWT | NFBGA | 337 | 90 | 6 X 15 | 150 | 315 | 135.9 | 7620 | 20 | 17.5 | 15.45 |
| TMS320F28377DZWTT | ZWT | NFBGA | 337 | 90 | 6 X 15 | 150 | 315 | 135.9 | 7620 | 20 | 17.5 | 15.45 |
| TMS320F28378DPTPS | PTP | HLQFP | 176 | 40 | 4x10 | 150 | 315 | 135.9 | 7620 | 20.7 | 30.4 | 20.7 |
| TMS320F28379DPTPQ | PTP | HLQFP | 176 | 40 | 4x10 | 150 | 315 | 135.9 | 7620 | 20.7 | 30.4 | 20.7 |
| TMS320F28379DPTPS | PTP | HLQFP | 176 | 40 | 4x10 | 150 | 315 | 135.9 | 7620 | 20.7 | 30.4 | 20.7 |
| TMS320F28379DPTPT | PTP | HLQFP | 176 | 40 | 4x10 | 150 | 315 | 135.9 | 7620 | 20.7 | 30.4 | 20.7 |
| TMS320F28379DZWTS | ZWT | NFBGA | 337 | 90 | 6 X 15 | 150 | 315 | 135.9 | 7620 | 20 | 17.5 | 15.45 |
| TMS320F28379DZWTT | ZWT | NFBGA | 337 | 90 | 6 X 15 | 150 | 315 | 135.9 | 7620 | 20 | 17.5 | 15.45 |

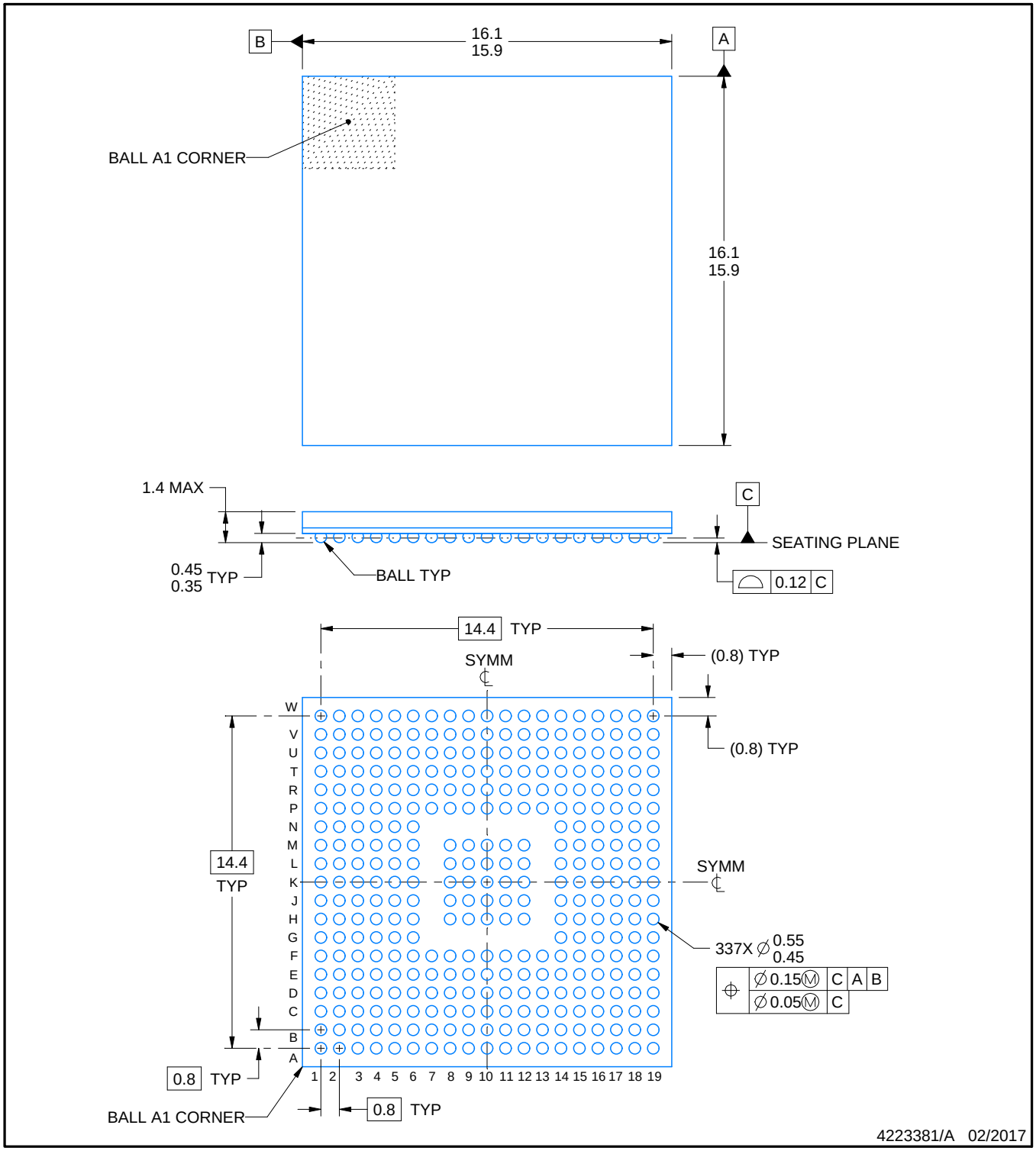


NOTES:

1. All linear dimensions are in millimeters. Any dimensions in parenthesis are for reference only. Dimensioning and tolerancing per ASME Y14.5M.
2. This drawing is subject to change without notice.

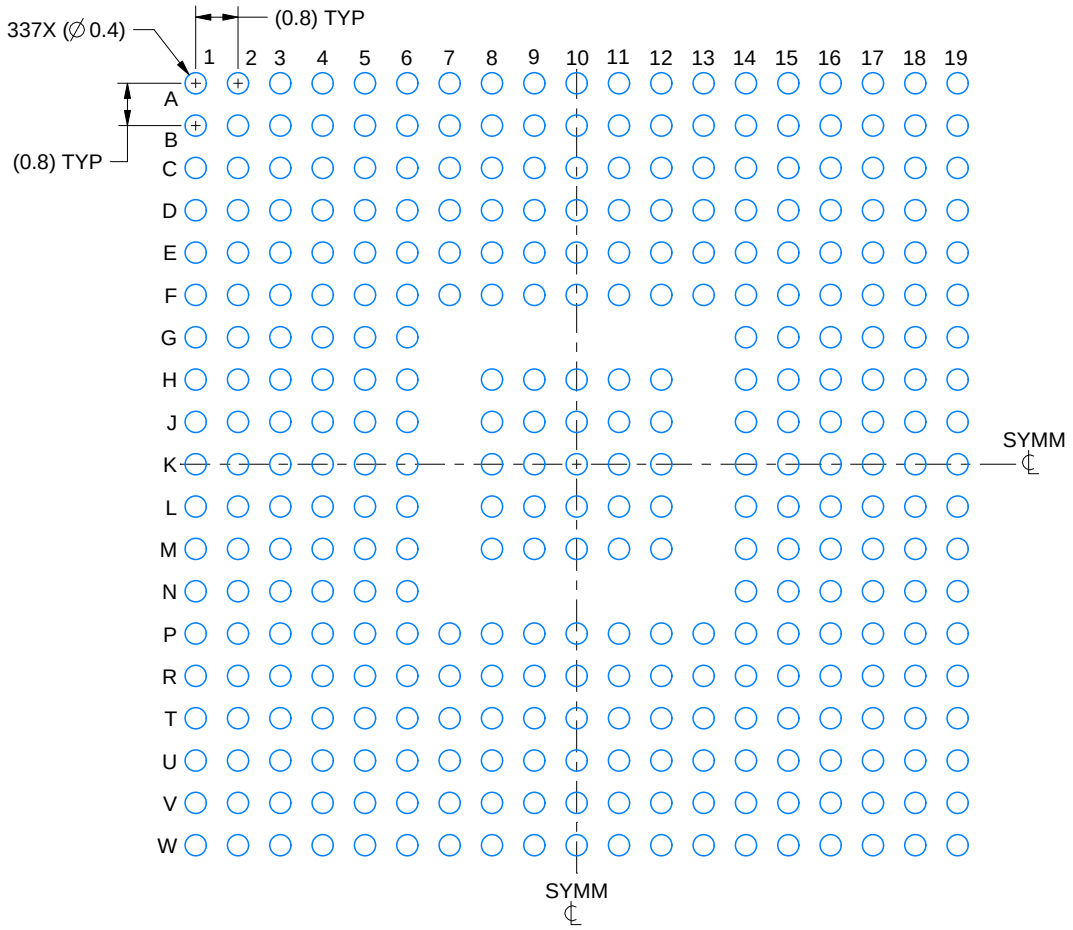


LAND PATTERN EXAMPLE
EXPOSED METAL SHOWN
SCALE:7X

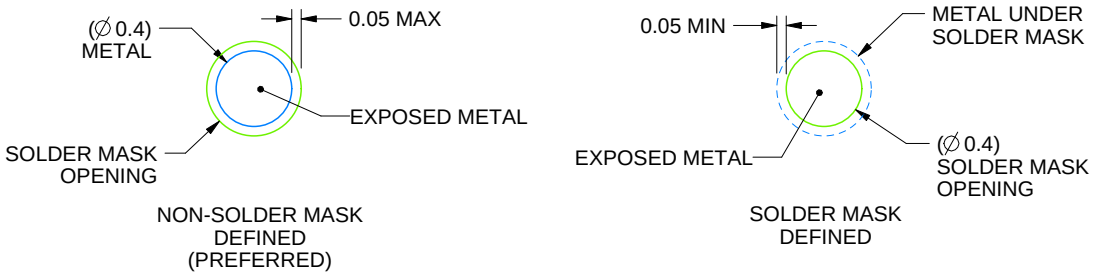


SOLDER MASK DETAILS
NOT TO SCALE

4223381/A 02/2017

NOTES: (continued)

3. Final dimensions may vary due to manufacturing tolerance considerations and also routing constraints.
For information, see Texas Instruments literature number SPRAA99 (www.ti.com/lit/spraa99).

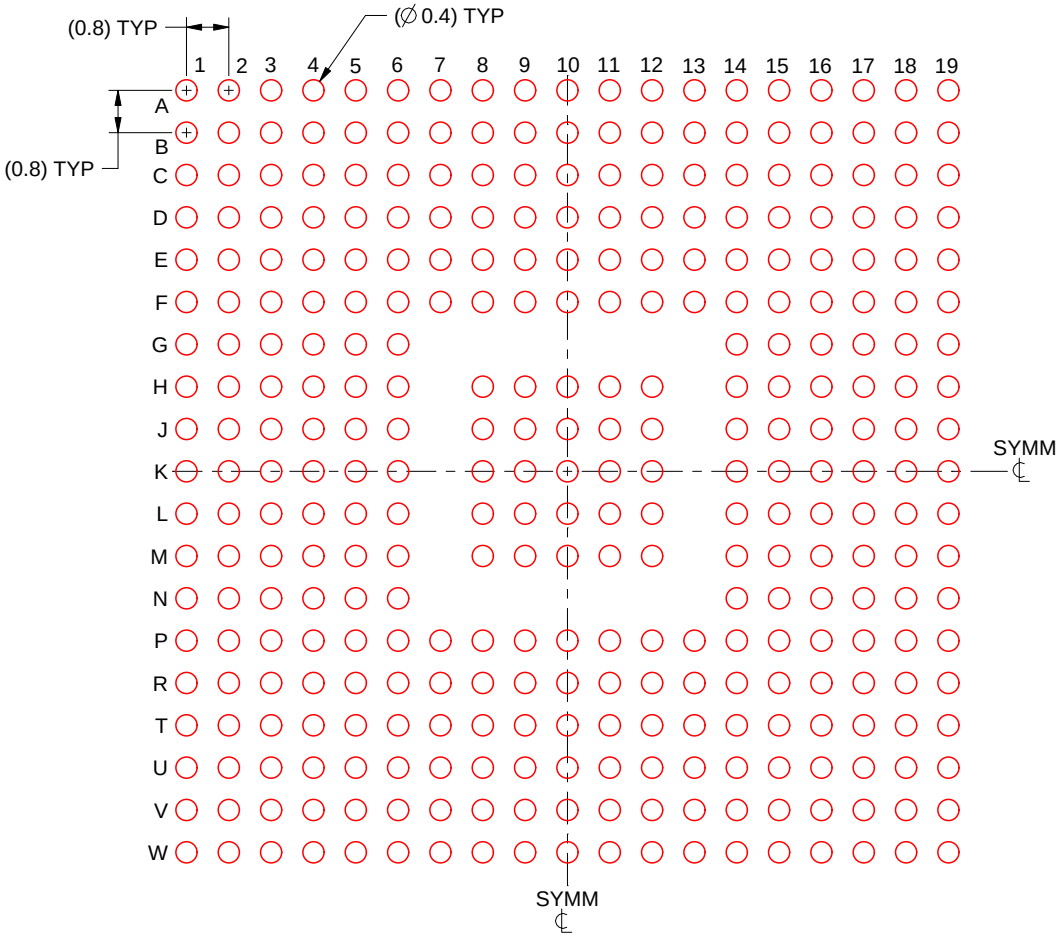


SOLDER PASTE EXAMPLE
BASED ON 0.15 mm THICK STENCIL
SCALE:7X

4223381/A 02/2017

NOTES: (continued)

4. Laser cutting apertures with trapezoidal walls and rounded corners may offer better paste release.

# 重要声明和免责声明

TI“按原样”提供技术和可靠性数据（包括数据表）、设计资源（包括参考设计）、应用或其他设计建议、网络工具、安全信息和其他资源，不保证没有瑕疵且不做出任何明示或暗示的担保，包括但不限于对适销性、某特定用途方面的适用性或不侵犯任何第三方知识产权的暗示担保。

这些资源可供使用 TI 产品进行设计的熟练开发人员使用。您将自行承担以下全部责任：(1) 针对您的应用选择合适的 TI 产品，(2) 设计、验证并测试您的应用，(3) 确保您的应用满足相应标准以及任何其他功能安全、信息安全、监管或其他要求。

这些资源如有变更，恕不另行通知。TI 授权您仅可将这些资源用于研发本资源所述的 TI 产品的应用。严禁对这些资源进行其他复制或展示。您无权使用任何其他 TI 知识产权或任何第三方知识产权。您应全额赔偿因在这些资源的使用中对 TI 及其代表造成的任何索赔、损害、成本、损失和债务，TI 对此概不负责。

TI 提供的产品受 TI 的销售条款或 ti.com 上其他适用条款/TI 产品随附的其他适用条款的约束。TI 提供这些资源并不会扩展或以其他方式更改 TI 针对 TI 产品发布的适用的担保或担保免责声明。

TI 反对并拒绝您可能提出的任何其他或不同的条款。

邮寄地址：Texas Instruments, Post Office Box 655303, Dallas, Texas 75265
Copyright © 2022，德州仪器 (TI) 公司