TMS320R2811, TMS320R2812
Digital Signal Processors

Data Manual

Literature Number: SPRS257C
June 2004 − Revised June 2006

PRODUCTION DATA information is current as of publication date. Products conform to specifications per the terms of Texas Instruments standard warranty. Production processing does not necessarily include testing of all parameters.

TEXAS INSTRUMENTS

REVISION HISTORY

This data sheet revision history highlights the technical changes made to the SPRS257B device-specific data sheet to make it an SPRS257C revision.

PAGE NO.	ADDITIONS/CHANGES/DELETIONS
13	Changed Temperature Options bullet in Features list
15	Added a separate row to Table 2−1 Hardware Features to modify Q temperature options
20	Modified symbol (§) note in Table 2−2
23	Modified Note in description of $\overline{\text{TRST}}$ in Table 2−2
23−24	Modified description of EMU0 and EMU1 in Table 2−2
31	Modified memory map in Figure 3−2
32	Modified memory map in Figure 3−3
87	Added the ZHH package to the Absolute Maximum Ratings table (6.1)
88	Added X1 to XCLKIN in the Recommended Operating Conditions table (6.2)
93	Modified XCLKIN values in Table 6−3
100	Modified note under Table 6−9
100	Modified note under Table 6−10 and changed values from MIN to MAX
100	Moved values from MIN to MAX in Table 6−12
101	Moved values from MIN to MAX in Table 6−14
102	Modified note C in Figure 6−13
103	Modified the last symbol note (‖) in Table 6−16
109	Modified note in Figure 6−22
111	Modified note in Figure 6−23
105	Modified note on Table 6−19
105	Modified note on Table 6−20
113	Modified note on Figure 6−24
127	Deleted last sentence in the fifth paragraph under section 6.27 $\overline{\text{XHOLD}}$ and $\overline{\text{XHOLDA}}$
131	Modified gain error and internal voltage reference values in Table 6−41

This page intentionally left blank.

Contents

Section — Page

1 Features . . . 13
2 Introduction . . . 14
2.1 Description . . . 14
2.2 Device Summary . . . 15
2.3 Pin Assignments . . . 16
2.3.1 Terminal Assignments for the GHH and ZHH Packages . . . 16
2.3.2 Pin Assignments for the PGF Package . . . 17
2.3.3 Pin Assignments for the PBK Package . . . 18
2.4 Signal Descriptions . . . 19
3 Functional Overview . . . 30
3.1 Memory Map . . . 31
3.2 Brief Descriptions . . . 34
3.2.1 C28x CPU . . . 34
3.2.2 Memory Bus (Harvard Bus Architecture) . . . 34
3.2.3 Peripheral Bus . . . 34
3.2.4 Real-Time JTAG and Analysis . . . 35
3.2.5 External Interface (XINTF) (2812 Only) . . . 35
3.2.6 M0, M1 SARAMs . . . 35
3.2.7 L0, L1, L2, L3, H0 SARAMs . . . 35
3.2.8 Boot ROM . . . 35
3.2.9 Security . . . 36
3.2.10 Peripheral Interrupt Expansion (PIE) Block . . . 36
3.2.11 External Interrupts (XINT1, 2, 13, XNMI) . . . 36
3.2.12 Oscillator and PLL . . . 36
3.2.13 Watchdog . . . 36
3.2.14 Peripheral Clocking . . . 37
3.2.15 Low-Power Modes . . . 37
3.2.16 Peripheral Frames 0, 1, 2 (PFn) . . . 37
3.2.17 General-Purpose Input/Output (GPIO) Multiplexer . . . 37
3.2.18 32-Bit CPU-Timers (0, 1, 2) . . . 37
3.2.19 Control Peripherals . . . 38
3.2.20 Serial Port Peripherals . . . 38
3.3 Register Map . . . 38
3.4 Device Emulation Registers . . . 40
3.5 External Interface, XINTF (2812 Only) . . . 41
3.5.1 Timing Registers . . . 41
3.5.2 XREVISION Register . . . 41
3.6 Interrupts . . . 43
3.6.1 External Interrupts . . . 46
3.7 System Control . . . 47
3.7.1 OSC and PLL Block . . . 48
3.7.2 Loss of Input Clock . . . 49
3.7.3 PLL-Based Clock Module . . . 50
3.7.4 External Reference Oscillator Clock Option . . . 50
3.7.5 Watchdog Block . . . 51
3.7.6 Low-Power Modes Block . . . 51
4 Peripherals . . . 53
4.1 32-Bit CPU-Timers 0/1/2 . . . 53

4.2 Event Manager Modules (EVA, EVB) . . . 55
4.2.1 General-Purpose (GP) Timers . . . 58
4.2.2 Full-Compare Units . . . 59
4.2.3 Programmable Deadband Generator . . . 59
4.2.4 PWM Waveform Generation . . . 59
4.2.5 Double Update PWM Mode . . . 59
4.2.6 PWM Characteristics . . . 59
4.2.7 Capture Unit . . . 60
4.2.8 Quadrature-Encoder Pulse (QEP) Circuit . . . 60
4.2.9 External ADC Start-of-Conversion . . . 60
4.3 Enhanced Analog-to-Digital Converter (ADC) Module . . . 61
4.4 Enhanced Controller Area Network (eCAN) Module . . . 66
4.5 Multichannel Buffered Serial Port (McBSP) Module . . . 70
4.6 Serial Communications Interface (SCI) Module . . . 73
4.7 Serial Peripheral Interface (SPI) Module . . . 76
4.8 GPIO MUX . . . 80
5 Development Support . . . 83
5.1 Device and Development Support Tool Nomenclature . . . 83
5.2 Documentation Support . . . 84
6 Electrical Specifications . . . 87
6.1 Absolute Maximum Ratings . . . 87
6.2 Recommended Operating Conditions† . . . 88
6.3 Electrical Characteristics Over Recommended Operating Conditions (Unless Otherwise Noted) . . . 88
6.4 Current Consumption by Power-Supply Pins Over Recommended Operating Conditions During Low-Power Modes at 150-MHz SYSCLKOUT (TMS320R281x) . . . 89
6.5 Current Consumption Graphs . . . 89
6.6 Reducing Current Consumption . . . 90
6.7 Power Sequencing Requirements . . . 90
6.8 Signal Transition Levels . . . 91
6.9 Timing Parameter Symbology . . . 92
6.10 General Notes on Timing Parameters . . . 92
6.11 Test Load Circuit . . . 92
6.12 Device Clock Table . . . 93
6.13 Clock Requirements and Characteristics . . . 93
6.13.1 Input Clock Requirements . . . 93
6.13.2 Output Clock Characteristics . . . 95
6.14 Reset Timing . . . 95
6.15 Low-Power Mode Wakeup Timing . . . 100
6.16 Event Manager Interface . . . 103
6.16.1 PWM Timing . . . 103
6.16.2 Interrupt Timing . . . 105
6.17 General-Purpose Input/Output (GPIO) − Output Timing . . . 106
6.18 General-Purpose Input/Output (GPIO) − Input Timing . . . 107
6.19 SPI Master Mode Timing . . . 108
6.20 SPI Slave Mode Timing . . . 112
6.21 External Interface (XINTF) Timing . . . 115
6.22 XINTF Signal Alignment to XCLKOUT . . . 117
6.23 External Interface Read Timing . . . 119
6.24 External Interface Write Timing . . . 120

6.25 External Interface Ready-on-Read Timing With One External Wait State 121
6.26 External Interface Ready-on-Write Timing With One External Wait State 124
6.27 $\overline{\text{XHOLD}}$ and $\overline{\text{XHOLDA}}$ 127
6.28 $\overline{\text{XHOLD}}$/$\overline{\text{XHOLDA}}$ Timing 128
6.29 On-Chip Analog-to-Digital Converter 130
6.29.1 ADC Absolute Maximum Ratings 130
6.29.2 ADC Electrical Characteristics Over Recommended Operating Conditions . . 131
6.29.3 Current Consumption for Different ADC Configurations (at 25-MHz ADCCLK) 132
6.29.4 ADC Power-Up Control Bit Timing 133
6.29.5 Detailed Description 134
6.29.5.1 Reference Voltage 134
6.29.5.2 Analog Inputs 134
6.29.5.3 Converter 134
6.29.5.4 Conversion Modes 134
6.29.6 Sequential Sampling Mode (Single-Channel) (SMODE = 0) 134
6.29.7 Simultaneous Sampling Mode (Dual-Channel) (SMODE = 1) 136
6.29.8 Definitions of Specifications and Terminology 137
6.30 Multichannel Buffered Serial Port (McBSP) Timing 138
6.30.1 McBSP Transmit and Receive Timing 138
6.30.2 McBSP as SPI Master or Slave Timing 141
7 Migration From F281x Devices 145
8 Mechanical Data 147

List of Figures

Figure *Page*

Figure 2−1. TMS320R2812 179-Ball GHH and ZHH MicroStar BGA (Bottom View) 16
Figure 2−2. TMS320R2812 176-Pin PGF LQFP (Top View) 17
Figure 2−3. TMS320R2811 128-Pin PBK LQFP (Top View) 18
Figure 3−1. Functional Block Diagram 30
Figure 3−2. R2812 Memory Map 31
Figure 3−3. R2811 Memory Map 32
Figure 3−4. External Interface Block Diagram 42
Figure 3−5. Interrupt Sources 43
Figure 3−6. Multiplexing of Interrupts Using the PIE Block 44
Figure 3−7. Clock and Reset Domains 47
Figure 3−8. OSC and PLL Block 49
Figure 3−9. Recommended Crystal/Clock Connection 50
Figure 3−10. Watchdog Module 51
Figure 4−1. CPU-Timers 53
Figure 4−2. CPU-Timer Interrupts Signals and Output Signal 54
Figure 4−3. Event Manager A Functional Block Diagram 58
Figure 4−4. Block Diagram of the R281x ADC Module 62
Figure 4−5. ADC Pin Connections With Internal Reference 63
Figure 4−6. ADC Pin Connections With External Reference 64
Figure 4−7. eCAN Block Diagram and Interface Circuit 67
Figure 4−8. eCAN Memory Map 68
Figure 4−9. McBSP Module With FIFO 71
Figure 4−10. Serial Communications Interface (SCI) Module Block Diagram 75
Figure 4−11. Serial Peripheral Interface Module Block Diagram (Slave Mode) 79
Figure 4−12. GPIO/Peripheral Pin MUXing 82
Figure 5−1. TMS320x28x Device Nomenclature 84
Figure 6−1. Typical Current Consumption Over Frequency 89
Figure 6−2. Typical Power Consumption Over Frequency 90
Figure 6−3. Output Levels 91
Figure 6−4. Input Levels 91
Figure 6−5. 3.3-V Test Load Circuit 92
Figure 6−6. Clock Timing 95
Figure 6−7. Power-on Reset in Microcomputer Mode (XMP/MC = 0) 96
Figure 6−8. Power-on Reset in Microprocessor Mode (XMP/MC = 1) 97
Figure 6−9. Warm Reset in Microcomputer Mode 98
Figure 6−10. Effect of Writing Into PLLCR Register 99
Figure 6−11. IDLE Entry and Exit Timing 100
Figure 6−12. STANDBY Entry and Exit Timing 101
Figure 6−13. HALT Wakeup Using XNMI 102
Figure 6−14. PWM Output Timing 103

Figure 6−15. TDIRx Timing . . . 103
Figure 6−16. EVASOC Timing . . . 104
Figure 6−17. EVBSOC Timing . . . 104
Figure 6−18. External Interrupt Timing . . . 106
Figure 6−19. General-Purpose Output Timing . . . 106
Figure 6−20. GPIO Input Qualifier − Example Diagram for QUALPRD = 1 . . . 107
Figure 6−21. General-Purpose Input Timing . . . 107
Figure 6−22. SPI Master Mode External Timing (Clock Phase = 0) . . . 109
Figure 6−23. SPI Master External Timing (Clock Phase = 1) . . . 111
Figure 6−24. SPI Slave Mode External Timing (Clock Phase = 0) . . . 113
Figure 6−25. SPI Slave Mode External Timing (Clock Phase = 1) . . . 114
Figure 6−26. Relationship Between XTIMCLK and SYSCLKOUT . . . 117
Figure 6−27. Example Read Access . . . 119
Figure 6−28. Example Write Access . . . 120
Figure 6−29. Example Read With Synchronous XREADY Access . . . 122
Figure 6−30. Example Read With Asynchronous XREADY Access . . . 123
Figure 6−31. Write With Synchronous XREADY Access . . . 125
Figure 6−32. Write With Asynchronous XREADY Access . . . 126
Figure 6−33. External Interface Hold Waveform . . . 128
Figure 6−34. XHOLD/XHOLDA Timing Requirements (XCLKOUT = 1/2 XTIMCLK) . . . 129
Figure 6−35. ADC Analog Input Impedance Model . . . 133
Figure 6−36. ADC Power-Up Control Bit Timing . . . 133
Figure 6−37. Sequential Sampling Mode (Single-Channel) Timing . . . 135
Figure 6−38. Simultaneous Sampling Mode Timing . . . 136
Figure 6−39. McBSP Receive Timing . . . 140
Figure 6−40. McBSP Transmit Timing . . . 140
Figure 6−41. McBSP Timing as SPI Master or Slave: CLKSTP = 10b, CLKXP = 0 . . . 141
Figure 6−42. McBSP Timing as SPI Master or Slave: CLKSTP = 11b, CLKXP = 0 . . . 142
Figure 6−43. McBSP Timing as SPI Master or Slave: CLKSTP = 10b, CLKXP = 1 . . . 143
Figure 6−44. McBSP Timing as SPI Master or Slave: CLKSTP = 11b, CLKXP = 1 . . . 144

List of Tables

Table *Page*

Table 2−1. Hardware Features . . . 15
Table 2−2. Signal Descriptions . . . 20
Table 3−1. Wait States . . . 33
Table 3−2. Boot Mode Selection . . . 36
Table 3−3. Peripheral Frame 0 Registers . . . 39
Table 3−4. Peripheral Frame 1 Registers . . . 39
Table 3−5. Peripheral Frame 2 Registers . . . 39
Table 3−6. Device Emulation Registers . . . 41
Table 3−7. XINTF Configuration and Control Register Mappings . . . 41
Table 3−8. XREVISION Register Bit Definitions . . . 41
Table 3−9. PIE Peripheral Interrupts . . . 44
Table 3−10. PIE Configuration and Control Registers . . . 45
Table 3−11. External Interrupt Registers . . . 46
Table 3−12. PLL, Clocking, Watchdog, and Low-Power Mode Registers . . . 48
Table 3−13. PLLCR Register Bit Definitions . . . 49
Table 3−14. Possible PLL Configuration Modes . . . 50
Table 3−15. R281x Low-Power Modes . . . 52
Table 4−1. CPU-Timers 0, 1, 2 Configuration and Control Registers . . . 55
Table 4−2. Module and Signal Names for EVA and EVB . . . 56
Table 4−3. EVA Registers . . . 57
Table 4−4. ADC Registers . . . 65
Table 4−5. 3.3-V eCAN Transceivers for the R281x DSPs . . . 67
Table 4−6. CAN Registers Map . . . 69
Table 4−7. McBSP Register Summary . . . 72
Table 4−8. SCI-A Registers . . . 76
Table 4−9. SCI-B Registers . . . 76
Table 4−10. SPI Registers . . . 78
Table 4−11. GPIO MUX Registers . . . 80
Table 4−12. GPIO Data Registers . . . 81
Table 6−1. Typical Current Consumption by Various Peripherals (at 150 MHz) . . . 90
Table 6−2. TMS320R281x Clock Table and Nomenclature . . . 93
Table 6−3. Input Clock Frequency . . . 93
Table 6−4. XCLKIN Timing Requirements − PLL Bypassed or Enabled . . . 94
Table 6−5. XCLKIN Timing Requirements − PLL Disabled . . . 94
Table 6−6. Possible PLL Configuration Modes . . . 94
Table 6−7. XCLKOUT Switching Characteristics (PLL Bypassed or Enabled) . . . 95
Table 6−8. Reset (XRS) Timing Requirements . . . 95
Table 6−9. IDLE Mode Timing Requirements . . . 100
Table 6−10. IDLE Mode Switching Characteristics . . . 100
Table 6−11. STANDBY Mode Timing Requirements . . . 100
Table 6−12. STANDBY Mode Switching Characteristics . . . 100
Table 6−13. HALT Mode Timing Requirements . . . 101
Table 6−14. HALT Mode Switching Characteristics . . . 101
Table 6−15. PWM Switching Characteristics†‡ . . . 103
Table 6−16. Timer and Capture Unit Timing Requirements . . . 103
Table 6−17. External ADC Start-of-Conversion − EVA − Switching Characteristics† . . . 104

Table 6−18. External ADC Start-of-Conversion − EVB − Switching Characteristics 104
Table 6−19. Interrupt Switching Characteristics 105
Table 6−20. Interrupt Timing Requirements 105
Table 6−21. General-Purpose Output Switching Characteristics 106
Table 6−22. General-Purpose Input Timing Requirements 107
Table 6−23. SPI Master Mode External Timing (Clock Phase = 0) 108
Table 6−24. SPI Master Mode External Timing (Clock Phase = 1) 110
Table 6−25. SPI Slave Mode External Timing (Clock Phase = 0) 112
Table 6−26. SPI Slave Mode External Timing (Clock Phase = 1) 114
Table 6−27. Relationship Between Parameters Configured in XTIMING and Duration of Pulse 115
Table 6−28. XINTF Clock Configurations 117
Table 6−29. External Memory Interface Read Switching Characteristics 119
Table 6−30. External Memory Interface Read Timing Requirements 119
Table 6−31. External Memory Interface Write Switching Characteristics 120
Table 6−32. External Memory Interface Read Switching Characteristics (Ready-on-Read, 1 Wait State) 121
Table 6−33. External Memory Interface Read Timing Requirements (Ready-on-Read, 1 Wait State) 121
Table 6−34. Synchronous XREADY Timing Requirements (Ready-on-Read, 1 Wait State) 121
Table 6−35. Asynchronous XREADY Timing Requirements (Ready-on-Read, 1 Wait State) 121
Table 6−36. External Memory Interface Write Switching Characteristics (Ready-on-Write, 1 Wait State) . . . 124
Table 6−37. Synchronous XREADY Timing Requirements (Ready-on-Write, 1 Wait State) 124
Table 6−38. Asynchronous XREADY Timing Requirements (Ready-on-Write, 1 Wait State) 124
Table 6−39. XHOLD/XHOLDA Timing Requirements (XCLKOUT = XTIMCLK) 128
Table 6−40. XHOLD/XHOLDA Timing Requirements (XCLKOUT = 1/2 XTIMCLK) 129
Table 6−41. DC Specifications 131
Table 6−42. AC Specifications 132
Table 6−43. ADC Power-Up Delays 133
Table 6−44. Sequential Sampling Mode Timing 135
Table 6−45. Simultaneous Sampling Mode Timing 136
Table 6−46. McBSP Timing Requirements 138
Table 6−47. McBSP Switching Characteristics 139
Table 6−48. McBSP as SPI Master or Slave Timing Requirements (CLKSTP = 10b, CLKXP = 0) 141
Table 6−49. McBSP as SPI Master or Slave Switching Characteristics (CLKSTP = 10b, CLKXP = 0) 141
Table 6−50. McBSP as SPI Master or Slave Timing Requirements (CLKSTP = 11b, CLKXP = 0) 142
Table 6−51. McBSP as SPI Master or Slave Switching Characteristics (CLKSTP = 11b, CLKXP = 0) 142
Table 6−52. McBSP as SPI Master or Slave Timing Requirements (CLKSTP = 10b, CLKXP = 1) 143
Table 6−53. McBSP as SPI Master or Slave Switching Characteristics (CLKSTP = 10b, CLKXP = 1) 143
Table 6−54. McBSP as SPI Master or Slave Timing Requirements (CLKSTP = 11b, CLKXP = 1) 144
Table 6−55. McBSP as SPI Master or Slave Switching Characteristics (CLKSTP = 11b, CLKXP = 1) 144
Table 6−56. Feature Comparison Between F281x and R281x Devices 145
Table 7−1. Thermal Resistance Characteristics for 179-GHH 147
Table 7−2. Thermal Resistance Characteristics for 179-ZHH 147
Table 7−3. Thermal Resistance Characteristics for 176-PGF 147
Table 7−4. Thermal Resistance Characteristics for 128-PBK 147

1 Features

- High-Performance Static CMOS Technology
  - 150 MHz (6.67-ns Cycle Time)
  - Low-Power (1.8-V Core @135 MHz, 1.9-V Core @150 MHz, 3.3-V I/O) Design
- JTAG Boundary Scan Support†
- High-Performance 32-Bit CPU (TMS320C28x)
  - 16 x 16 and 32 x 32 MAC Operations
  - 16 x 16 Dual MAC
  - Harvard Bus Architecture
  - Atomic Operations
  - Fast Interrupt Response and Processing
  - Unified Memory Programming Model
  - 4M Linear Program/Data Address Reach
  - Code-Efficient (in C/C++ and Assembly)
  - Code and Pin Compatible to F2810, F2811, and F2812 devices
  - TMS320F24x/LF240x Processor Source Code Compatible
- On-Chip Memory
  - 20K x 16 Total Single-Access RAM (SARAM)
    - L0 and L1: 2 Blocks of 4K x 16 Each SARAM
    - L2 and L3: 2 Blocks of 1K X 16 SARAM
    - H0: 1 Block of 8K x 16 SARAM
    - M0 and M1: 2 Blocks of 1K x 16 Each SARAM
- SPI, SCI, and GPIO Boot Loader Modes to Support Loading Code From Off-chip Sources to On-chip RAM. SPI Boot Mode Supports Loading From an External Serial EEPROM.
- Boot ROM (4K x 16)
  - With Software Boot Modes
  - Standard Math Tables
- External Interface (2812)
  - Up to 1M Total Memory
  - Programmable Wait States
  - Programmable Read/Write Strobe Timing
  - Three Individual Chip Selects
- Clock and System Control
  - Dynamic PLL Ratio Changes Supported
  - On-Chip Oscillator
  - Watchdog Timer Module
- Three External Interrupts
- Peripheral Interrupt Expansion (PIE) Block That Supports 45 Peripheral Interrupts
- Three 32-Bit CPU-Timers
- Motor Control Peripherals
  - Two Event Managers (EVA, EVB)
  - Compatible to 240xA Devices
- Serial Port Peripherals
  - Serial Peripheral Interface (SPI)
  - Two Serial Communications Interfaces (SCIs), Standard UART
  - Enhanced Controller Area Network (eCAN)
  - Multichannel Buffered Serial Port (McBSP)
- 12-Bit ADC, 16 Channels
  - 2 x 8 Channel Input Multiplexer
  - Two Sample-and-Hold
  - Single/Simultaneous Conversions
  - Fast Conversion Rate: 80 ns/12.5 MSPS
- Up to 56 General Purpose I/O (GPIO) Pins
- Advanced Emulation Features
  - Analysis and Breakpoint Functions
  - Real-Time Debug via Hardware
- Development Tools Include
  - ANSI C/C++ Compiler/Assembler/Linker
  - Code Composer Studio™ IDE
  - DSP/BIOS™
  - JTAG Scan Controllers†
- Low-Power Modes and Power Savings
  - IDLE, STANDBY, HALT Modes Supported
  - Disable Individual Peripheral Clocks
- Package Options
  - 179-Ball MicroStar BGA™ With External Memory Interface (GHH), (ZHH) (2812)
  - 176-Pin Low-Profile Quad Flatpack (LQFP) With External Memory Interface (PGF) (2812)
  - 128-Pin LQFP Without External Memory Interface (PBK) (2811)
- Temperature Options:
  - A: −40°C to 85°C (GHH, ZHH, PGF, PBK)
  - S: −40°C to 125°C (GHH, ZHH, PGF, PBK)
  - Q: −40°C to 125°C (PGF, PBK)

TMS320C24x, Code Composer Studio, DSP/BIOS, and MicroStar BGA are trademarks of Texas Instruments.
† IEEE Standard 1149.1−1990, IEEE Standard Test-Access Port

2 Introduction

This section provides a summary of each device's features, lists the pin assignments, and describes the function of each pin. This document also provides detailed descriptions of peripherals, electrical specifications, parameter measurement information, and mechanical data about the available packaging.

2.1 Description

The TMS320R2811 and TMS320R2812 devices, members of the TMS320C28x™ DSP generation, are highly integrated, high-performance solutions for demanding control applications. The functional blocks and the memory maps are described in Section 3, Functional Overview.

Throughout this document, TMS320R2811 and TMS320R2812 are abbreviated as R2811 and R2812, respectively.

TMS320C28x is a trademark of Texas Instruments.
All trademarks are the property of their respective owners.

2.2 Device Summary

Table 2−1 provides a summary of each device's features.

Table 2−1. Hardware Features†

FEATURE		R2811	R2812
Instruction Cycle (at 150 MHz)		6.67 ns	6.67 ns
Single-Access RAM (SARAM) (16-bit word)		20K	20K
Boot ROM		Yes	Yes
External Memory Interface		—	Yes
Event Managers A and B (EVA and EVB)		EVA, EVB	EVA, EVB
• General-Purpose (GP) Timers		4	4
• Compare (CMP)/PWM		16	16
• Capture (CAP)/QEP Channels		6/2	6/2
Watchdog Timer		Yes	Yes
12-Bit ADC		Yes	Yes
• Channels		16	16
32-Bit CPU Timers		3	3
SPI		Yes	Yes
SCIA, SCIB		SCIA, SCIB	SCIA, SCIB
CAN		Yes	Yes
McBSP		Yes	Yes
Digital I/O Pins (Shared)		56	56
External Interrupts		3	3
Supply Voltage		1.8-V Core, (135 MHz) 1.9-V Core (150 MHz), 3.3-V I/O	
Packaging		128-pin PBK	179-ball GHH 179-ball ZHH 176-pin PGF
Temperature Options	A: −40°C to 85°C	Yes	Yes
	S: −40°C to 125°C	Yes	Yes
	Q: −40°C to 125°C	Yes	PGF package only
Product Status†		TMS	TMS

† See Section 5.1, Device and Development Support Nomenclature for descriptions of product development stages.

2.3 Pin Assignments

Figure 2−1 illustrates the ball locations for the 179-ball GHH and ZHH ball grid array (BGA) packages. Figure 2−2 shows the pin assignments for the 176-pin PGF low-profile quad flatpack (LQFP) and Figure 2−3 shows the pin assignments for the 128-pin PBK LQFP. Table 2−2 describes the function(s) of each pin.

2.3.1 Terminal Assignments for the GHH and ZHH Packages

See Table 2−2 for a description of each terminal's function(s).

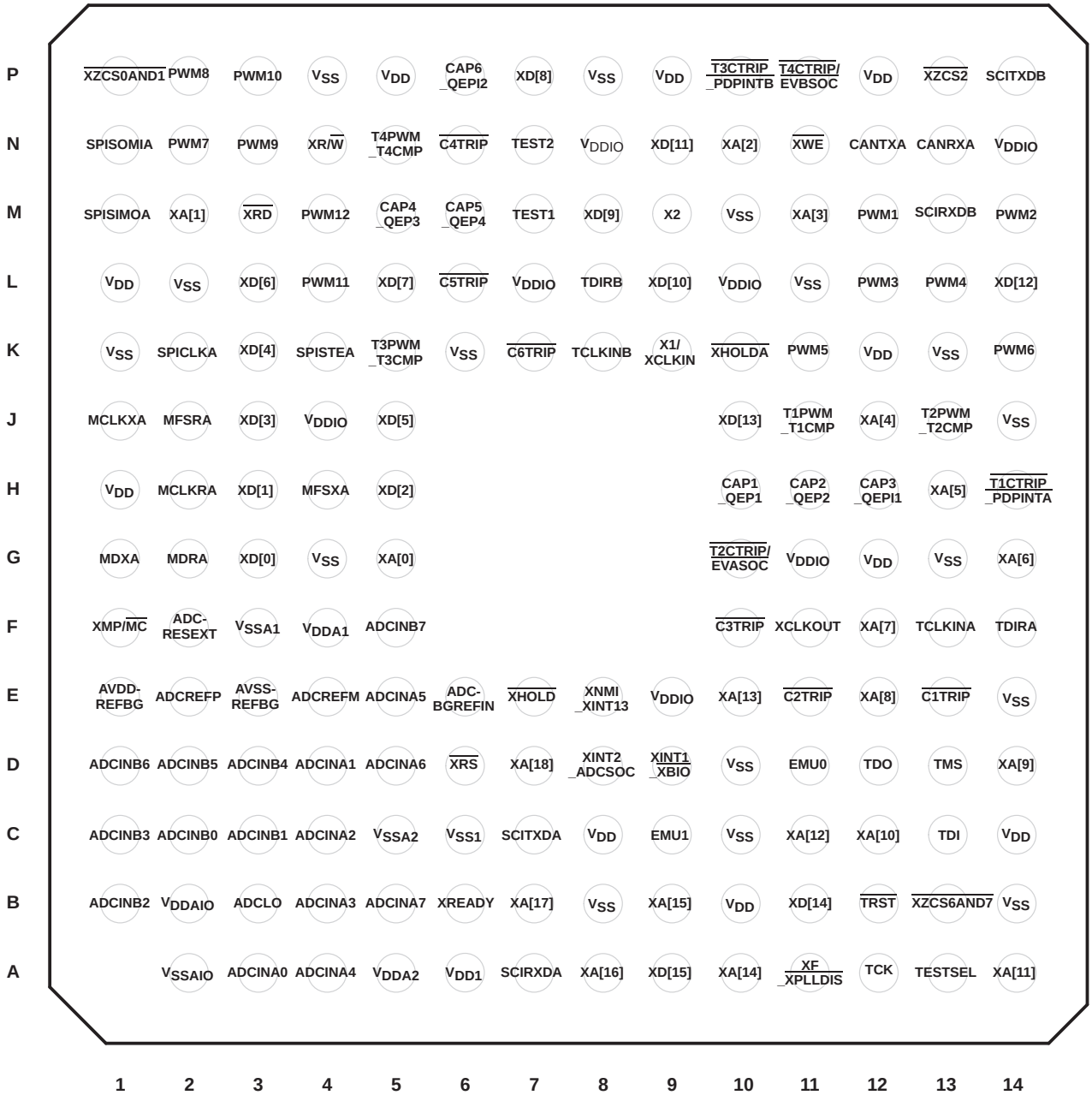

Figure 2−1. TMS320R2812 179-Ball GHH and ZHH MicroStar BGA™ (Bottom View)

2.3.2 Pin Assignments for the PGF Package

The TMS320R2812 176-pin PGF low-profile quad flatpack (LQFP) pin assignments are shown in Figure 2−2. See Table 2−2 for a description of each pin's function(s).

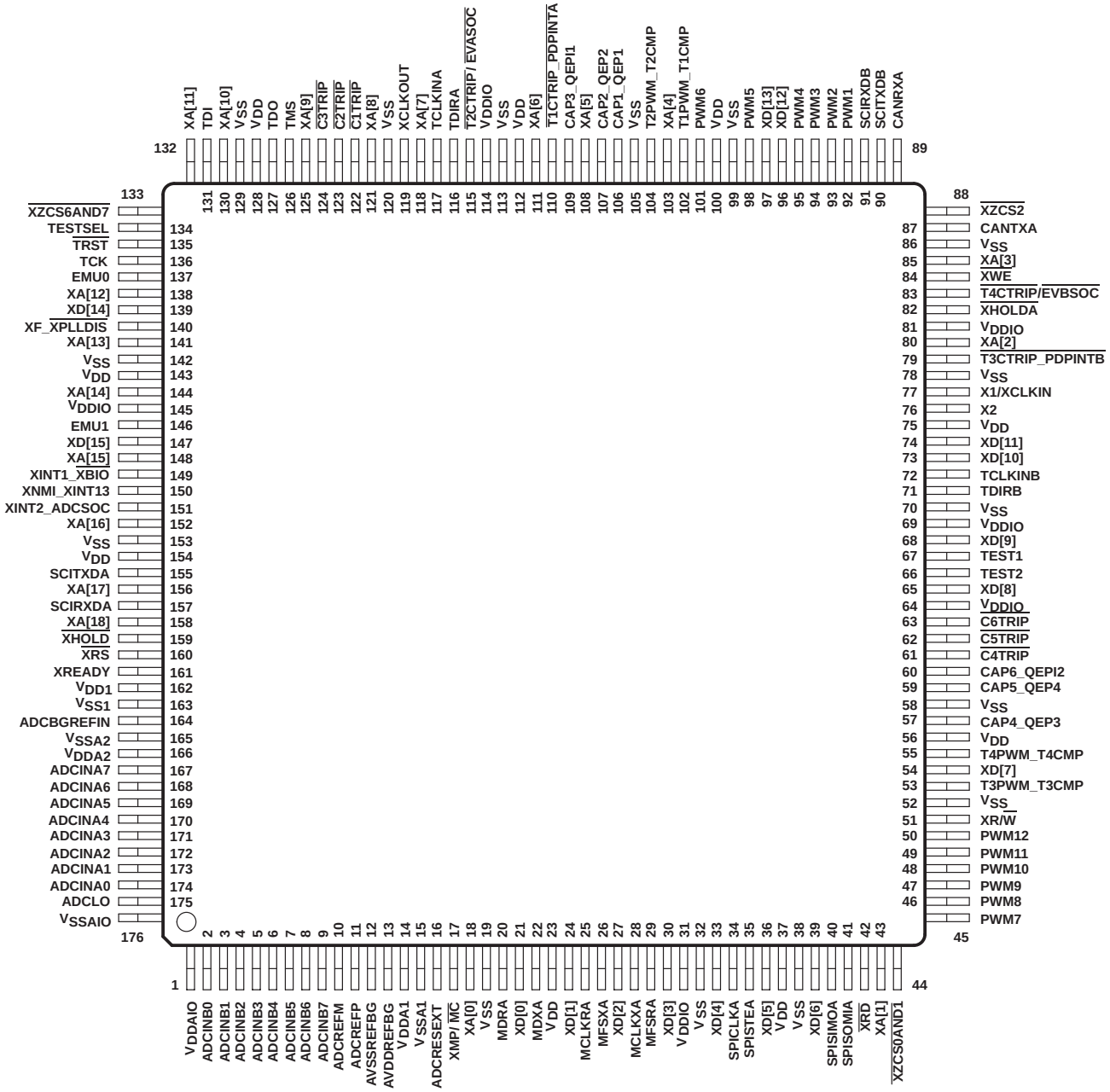

Figure 2−2. TMS320R2812 176-Pin PGF LQFP (Top View)

2.3.3 Pin Assignments for the PBK Package

The TMS320R2811 128-pin PBK low-profile quad flatpack (LQFP) pin assignments are shown in Figure 2−3. See Table 2−2 for a description of each pin's function(s).

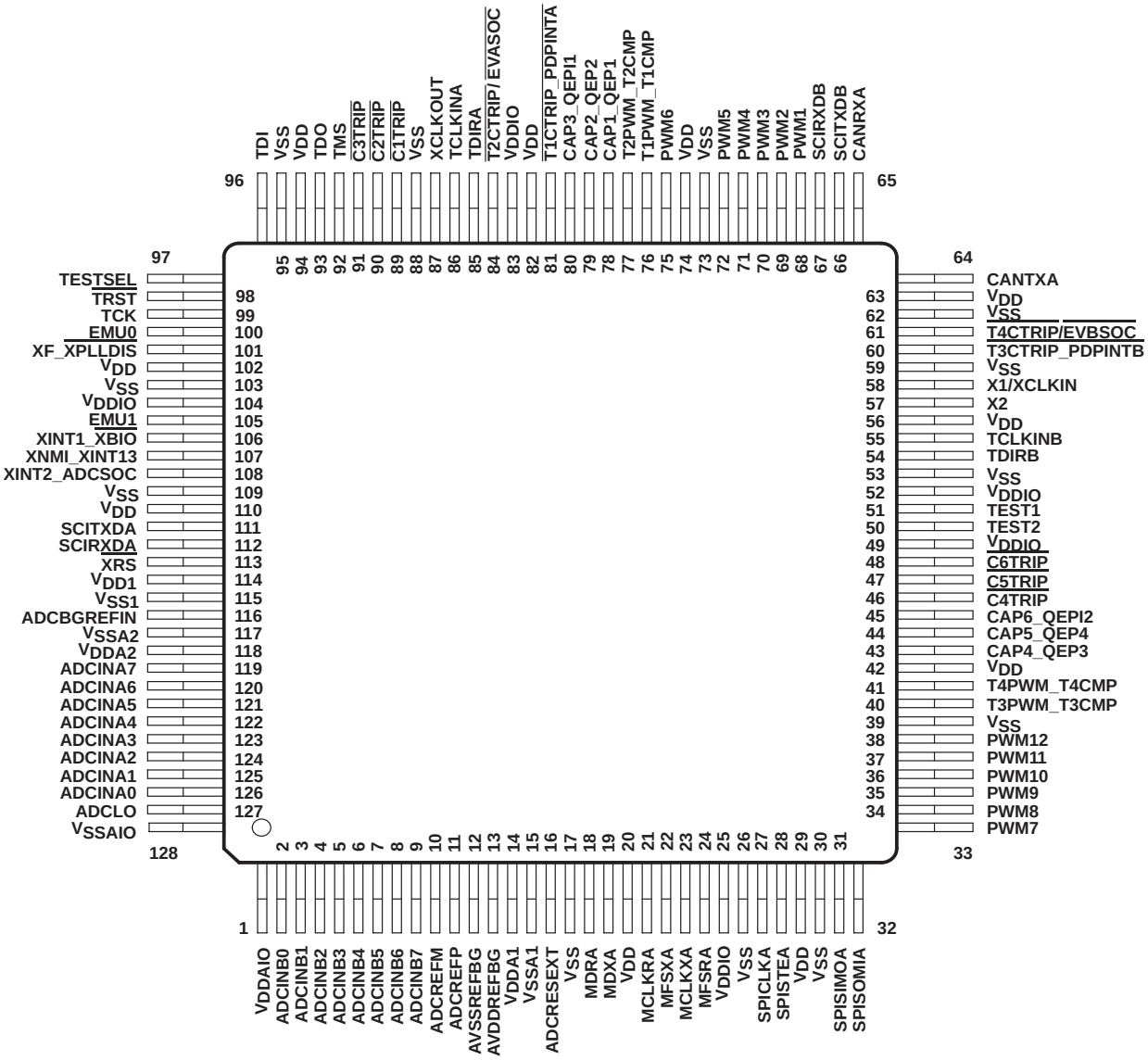

Figure 2−3. TMS320R2811 128-Pin PBK LQFP (Top View)

2.4 Signal Descriptions

Table 2−2 specifies the signals on the R281x devices. All digital inputs are TTL-compatible. All outputs are 3.3 V with CMOS levels. Inputs are not 5-V tolerant.

Table 2−2. Signal Descriptions†

NAME	PIN NO.			I/O/Z‡	PU/PD§	DESCRIPTION
	179-PIN GHH AND ZHH	176-PIN PGF	128-PIN PBK			
XINTF SIGNALS (2812 ONLY)						
XA[18]	D7	158	–	O/Z	–	19-bit XINTF Address Bus
XA[17]	B7	156	–	O/Z	–	
XA[16]	A8	152	–	O/Z	–	
XA[15]	B9	148	–	O/Z	–	
XA[14]	A10	144	–	O/Z	–	
XA[13]	E10	141	–	O/Z	–	
XA[12]	C11	138	–	O/Z	–	
XA[11]	A14	132	–	O/Z		
XA[10]	C12	130	–	O/Z	–	
XA[9]	D14	125	–	O/Z	–	
XA[8]	E12	121	–	O/Z	–	
XA[7]	F12	118	–	O/Z	–	
XA[6]	G14	111	–	O/Z	–	
XA[5]	H13	108	–	O/Z	–	
XA[4]	J12	103	–	O/Z	–	
XA[3]	M11	85	–	O/Z	–	
XA[2]	N10	80	–	O/Z	–	
XA[1]	M2	43	–	O/Z	–	
XA[0]	G5	18	–	O/Z		
XD[15]	A9	147	–	I/O/Z	PU	16-bit XINTF Data Bus
XD[14]	B11	139	–	I/O/Z	PU	
XD[13]	J10	97	–	I/O/Z	PU	
XD[12]	L14	96	–	I/O/Z	PU	
XD[11]	N9	74	–	I/O/Z	PU	
XD[10]	L9	73	–	I/O/Z	PU	
XD[9]	M8	68	–	I/O/Z	PU	
XD[8]	P7	65	–	I/O/Z	PU	
XD[7]	L5	54	–	I/O/Z	PU	
XD[6]	L3	39	–	I/O/Z	PU	
XD[5]	J5	36	–	I/O/Z	PU	
XD[4]	K3	33	–	I/O/Z	PU	
XD[3]	J3	30	–	I/O/Z	PU	
XD[2]	H5	27	–	I/O/Z	PU	
XD[1]	H3	24	–	I/O/Z	PU	
XINTF SIGNALS (2812 ONLY) (CONTINUED)						
XD[0]	G3	21	–	I/O/Z	PU	16-bit XINTF Data Bus

† Typical drive strength of the output buffer for all pins is 4 mA except for TDO, XCLKOUT, XF, XINTF, EMU0, and EMU1 pins, which are 8 mA.
‡ I = Input, O = Output, Z = High impedance
§ PU = pin has internal pullup; PD = pin has internal pulldown. Pullup/pulldown strength is given in Section 6.3. The pullups/pulldowns are enabled in boundary-scan mode.

Table 2−2. Signal Descriptions† (Continued)

NAME	PIN NO.			I/O/Z‡	PU/PD§	DESCRIPTION
	179-PIN GHH AND ZHH	176-PIN PGF	128-PIN PBK			
XMP/$\overline{MC}$	F1	17	−	I	PD	Microprocessor/Microcomputer Mode Select. Switches between microprocessor and microcomputer mode. When high, Zone 7 is enabled on the external interface. When low, Zone 7 is disabled from the external interface, and on-chip boot ROM may be accessed instead. This signal is latched into the XINTCNF2 register on a reset and the user can modify this bit in software. The state of the XMP/$\overline{MC}$ pin is ignored after reset.
$\overline{XHOLD}$	E7	159	−	I	PU	External Hold Request. $\overline{XHOLD}$, when active (low), requests the XINTF to release the external bus and place all buses and strobes into a high-impedance state. The XINTF will release the bus when any current access is complete and there are no pending accesses on the XINTF.
$\overline{XHOLDA}$	K10	82	−	O/Z	−	External Hold Acknowledge. $\overline{XHOLDA}$ is driven active (low) when the XINTF has granted a $\overline{XHOLD}$ request. All XINTF buses and strobe signals will be in a high-impedance state. $\overline{XHOLDA}$ is released when the $\overline{XHOLD}$ signal is released. External devices should only drive the external bus when $\overline{XHOLDA}$ is active (low).
$\overline{XZCS0AND1}$	P1	44	−	O/Z	−	XINTF Zone 0 and Zone 1 Chip Select. $\overline{XZCS0AND1}$ is active (low) when an access to the XINTF Zone 0 or Zone 1 is performed.
$\overline{XZCS2}$	P13	88	−	O/Z	−	XINTF Zone 2 Chip Select. $\overline{XZCS2}$ is active (low) when an access to the XINTF Zone 2 is performed.
$\overline{XZCS6AND7}$	B13	133	−	O/Z	−	XINTF Zone 6 and Zone 7 Chip Select. $\overline{XZCS6AND7}$ is active (low) when an access to the XINTF Zone 6 or Zone 7 is performed.
$\overline{XWE}$	N11	84	−	O/Z	−	Write Enable. Active-low write strobe. The write strobe waveform is specified, per zone basis, by the Lead, Active, and Trail periods in the XTIMINGx registers.
$\overline{XRD}$	M3	42	−	O/Z	−	Read Enable. Active-low read strobe. The read strobe waveform is specified, per zone basis, by the Lead, Active, and Trail periods in the XTIMINGx registers. NOTE: The $\overline{XRD}$ and $\overline{XWE}$ signals are mutually exclusive.
XR/$\overline{W}$	N4	51	−	O/Z	−	Read Not Write Strobe. Normally held high. When low, XR/$\overline{W}$ indicates write cycle is active; when high, XR/$\overline{W}$ indicates read cycle is active.
XREADY	B6	161	−	I	PU	Ready Signal. Indicates peripheral is ready to complete the access when asserted to 1. XREADY can be configured to be a synchronous or an asynchronous input. See the timing diagrams for more details.

† Typical drive strength of the output buffer for all pins is 4 mA except for TDO, XCLKOUT, XF, XINTF, EMU0, and EMU1 pins, which are 8 mA.
‡ I = Input, O = Output, Z = High impedance
§ PU = pin has internal pullup; PD = pin has internal pulldown. Pullup/pulldown strength is given in Section 6.3. The pullups/pulldowns are enabled in boundary-scan mode.

Table 2−2. Signal Descriptions† (Continued)

NAME	PIN NO.			I/O/Z‡	PU/PD§	DESCRIPTION
	179-PIN GHH AND ZHH	176-PIN PGF	128-PIN PBK			
JTAG AND MISCELLANEOUS SIGNALS						
X1/XCLKIN	K9	77	58	I		Oscillator Input − input to the internal oscillator. This pin is also used to feed an external clock. The 28x can be operated with an external clock source, provided that the proper voltage levels be driven on the X1/XCLKIN pin. It should be noted that the X1/XCLKIN pin is referenced to the 1.8-V (or 1.9-V) core digital power supply (V_{DD}), rather than the 3.3-V I/O supply (V_{DDIO}). A clamping diode may be used to clamp a buffered clock signal to ensure that the logic-high level does not exceed V_{DD} (1.8 V or 1.9 V) or a 1.8-V oscillator may be used.
X2	M9	76	57	O		Oscillator Output
XCLKOUT	F11	119	87	O	−	Output clock derived from SYSCLKOUT to be used for external wait-state generation and as a general-purpose clock source. XCLKOUT is either the same frequency, 1/2 the frequency, or 1/4 the frequency of SYSCLKOUT. At reset, XCLKOUT = SYSCLKOUT/4. The XCLKOUT signal can be turned off by setting bit 3 (CLKOFF) of the XINTCNF2 register to 1. Unlike other GPIO pins, the XCLKOUT pin is not placed in a high impedance state during reset.
TESTSEL	A13	134	97	I	PD	Test Pin. Reserved for TI. Must be connected to ground.
$\overline{\text{XRS}}$	D6	160	113	I/O	PU	Device Reset (in) and Watchdog Reset (out). Device reset. $\overline{\text{XRS}}$ causes the device to terminate execution. The PC will point to the address contained at the location 0x3FFFC0. When $\overline{\text{XRS}}$ is brought to a high level, execution begins at the location pointed to by the PC. This pin is driven low by the DSP when a watchdog reset occurs. During watchdog reset, the $\overline{\text{XRS}}$ pin will be driven low for the watchdog reset duration of 512 XCLKIN cycles. The output buffer of this pin is an open-drain with an internal pullup (100 μA, typical). It is recommended that this pin be driven by an open-drain device.
TEST1	M7	67	51	I/O	−	This pin is a “no connect (NC)” (i.e., this pin is not connected to any circuitry internal to the device).
TEST2	N7	66	50	I/O	−	This pin is a “no connect (NC)” (i.e., this pin is not connected to any circuitry internal to the device).

† Typical drive strength of the output buffer for all pins is 4 mA except for TDO, XCLKOUT, XF, XINTF, EMU0, and EMU1 pins, which are 8 mA.
‡ I = Input, O = Output, Z = High impedance
§ PU = pin has internal pullup; PD = pin has internal pulldown. Pullup/pulldown strength is given in Section 6.3. The pullups/pulldowns are enabled in boundary-scan mode.

Table 2−2. Signal Descriptions† (Continued)

NAME	PIN NO.			I/O/Z‡	PU/PD§	DESCRIPTION
	179-PIN GHH AND ZHH	176-PIN PGF	128-PIN PBK			
JTAG						
$\overline{\text{TRST}}$	B12	135	98	I	PD	JTAG test reset with internal pulldown. $\overline{\text{TRST}}$, when driven high, gives the scan system control of the operations of the device. If this signal is not connected or driven low, the device operates in its functional mode, and the test reset signals are ignored. NOTE: Do not use pullup resistors on $\overline{\text{TRST}}$; it has an internal pulldown device. $\overline{\text{TRST}}$ is an active high test pin and must be maintained low at all times during normal device operation. In a low-noise environment, $\overline{\text{TRST}}$ may be left floating. In other instances, an external pulldown resistor is highly recommended. The value of this resistor should be based on drive strength of the debugger pods applicable to the design. A 2.2-kΩ resistor generally offers adequate protection. Since this is application-specific, it is recommended that each target board be validated for proper operation of the debugger and the application.
TCK	A12	136	99	I	PU	JTAG test clock with internal pullup
TMS	D13	126	92	I	PU	JTAG test-mode select (TMS) with internal pullup. This serial control input is clocked into the TAP controller on the rising edge of TCK.
TDI	C13	131	96	I	PU	JTAG test data input (TDI) with internal pullup. TDI is clocked into the selected register (instruction or data) on a rising edge of TCK.
TDO	D12	127	93	O/Z	–	JTAG scan out, test data output (TDO). The contents of the selected register (instruction or data) is shifted out of TDO on the falling edge of TCK.
EMU0	D11	137	100	I/O/Z	PU	Emulator pin 0. When $\overline{\text{TRST}}$ is driven high, this pin is used as an interrupt to or from the emulator system and is defined as input/output through the JTAG scan. This pin is also used to put the device into boundary-scan mode. With the EMU0 pin at a logic-high state and the EMU1 pin at a logic-low state, a rising edge on the $\overline{\text{TRST}}$ pin would latch the device into boundary-scan mode. NOTE: An external pullup resistor is recommended on this pin. The value of this resistor should be based on the drive strength of the debugger pods applicable to the design. A 2.2-kΩ to 4.7-kΩ resistor is generally adequate. Since this is application-specific, it is recommended that each target board be validated for proper operation of the debugger and the application.

† Typical drive strength of the output buffer for all pins is 4 mA except for TDO, XCLKOUT, XF, XINTF, EMU0, and EMU1 pins, which are 8 mA.
‡ I = Input, O = Output, Z = High impedance
§ PU = pin has internal pullup; PD = pin has internal pulldown. Pullup/pulldown strength is given in Section 6.3. The pullups/pulldowns are enabled in boundary-scan mode.

Table 2−2. Signal Descriptions† (Continued)

NAME	PIN NO.			I/O/Z‡	PU/PD§	DESCRIPTION
	179-PIN GHH AND ZHH	176-PIN PGF	128-PIN PBK			
JTAG (CONTINUED)						
EMU1	C9	146	105	I/O/Z	PU	Emulator pin 1. When $\overline{\text{TRST}}$ is driven high, this pin is used as an interrupt to or from the emulator system and is defined as input/output through the JTAG scan. This pin is also used to put the device into boundary-scan mode. With the EMU0 pin at a logic-high state and the EMU1 pin at a logic-low state, a rising edge on the $\overline{\text{TRST}}$ pin would latch the device into boundary-scan mode. NOTE: An external pullup resistor is recommended on this pin. The value of this resistor should be based on the drive strength of the debugger pods applicable to the design. A 2.2-kΩ to 4.7-kΩ resistor is generally adequate. Since this is application-specific, it is recommended that each target board be validated for proper operation of the debugger and the application.
ADC ANALOG INPUT SIGNALS						
ADCINA7	B5	167	119	I		8-Channel analog inputs for Sample-and-Hold A. The ADC pins should not be driven before V_{DDA1}, V_{DDA2}, and V_{DDAIO} pins have been fully powered up.
ADCINA6	D5	168	120	I		
ADCINA5	E5	169	121	I		
ADCINA4	A4	170	122	I		
ADCINA3	B4	171	123	I		
ADCINA2	C4	172	124	I		
ADCINA1	D4	173	125	I		
ADCINA0	A3	174	126	I		
ADCINB7	F5	9	9	I		8-Channel Analog Inputs for Sample-and-Hold B. The ADC pins should not be driven before the V_{DDA1}, V_{DDA2}, and V_{DDAIO} pins have been fully powered up.
ADCINB6	D1	8	8	I		
ADCINB5	D2	7	7	I		
ADCINB4	D3	6	6	I		
ADCINB3	C1	5	5	I		
ADCINB2	B1	4	4	I		
ADCINB1	C3	3	3	I		
ADCINB0	C2	2	2	I		
ADCREFP	E2	11	11	I/O		ADC Voltage Reference Output (2 V). Requires a low ESR (50 mΩ − 1.5 Ω) ceramic bypass capacitor of 10 μF to analog ground. (Can accept external reference input (2 V) if the software bit is enabled for this mode. 1−10 μF low ESR capacitor can be used in the external reference mode.)

† Typical drive strength of the output buffer for all pins is 4 mA except for TDO, XCLKOUT, XF, XINTF, EMU0, and EMU1 pins, which are 8 mA.
‡ I = Input, O = Output, Z = High impedance
§ PU = pin has internal pullup; PD = pin has internal pulldown. Pullup/pulldown strength is given in Section 6.3. The pullups/pulldowns are enabled in boundary-scan mode.

Table 2−2. Signal Descriptions† (Continued)

NAME	PIN NO.			I/O/Z‡	PU/PD§	DESCRIPTION
	179-PIN GHH AND ZHH	176-PIN PGF	128-PIN PBK			
ADC ANALOG INPUT SIGNALS (CONTINUED)						
ADCREFM	E4	10	10	I/O		ADC Voltage Reference Output (1 V). Requires a low ESR (50 mΩ − 1.5 Ω) ceramic bypass capacitor of 10 μF to analog ground. (Can accept external reference input (1 V) if the software bit is enabled for this mode. 1−10 μF low ESR capacitor can be used in the external reference mode.)
ADCRESEXT	F2	16	16	O		ADC External Current Bias Resistor (24.9 kΩ ±5%)
ADCBGREFIN	E6	164	116	I		Test Pin. Reserved for TI. Must be left unconnected.
AVSSREFBG	E3	12	12	I		ADC Analog GND
AVDDREFBG	E1	13	13	I		ADC Analog Power (3.3-V)
ADCLO	B3	175	127	I		Common Low Side Analog Input. Connect to analog ground.
V_{SSA1}	F3	15	15	I		ADC Analog GND
V_{SSA2}	C5	165	117	I		ADC Analog GND
V_{DDA1}	F4	14	14	I		ADC Analog 3.3-V Supply
V_{DDA2}	A5	166	118	I		ADC Analog 3.3-V Supply
V_{SS1}	C6	163	115	I		ADC Digital GND
V_{DD1}	A6	162	114	I		ADC Digital 1.8-V (or 1.9-V) Supply
V_{DDAIO}	B2	1	1			3.3-V Analog I/O Power Pin
V_{SSAIO}	A2	176	128			Analog I/O Ground Pin
POWER SIGNALS						
V_{DD}	H1	23	20			1.8-V or 1.9-V Core Digital Power Pins. See Section 6.2, Recommended Operating Conditions, for voltage requirements.
V_{DD}	L1	37	29			
V_{DD}	P5	56	42			
V_{DD}	P9	75	56			
V_{DD}	P12	−	63			
V_{DD}	K12	100	74			
V_{DD}	G12	112	82			
V_{DD}	C14	128	94			
V_{DD}	B10	143	102			
V_{DD}	C8	154	110			

† Typical drive strength of the output buffer for all pins is 4 mA except for TDO, XCLKOUT, XF, XINTF, EMU0, and EMU1 pins, which are 8 mA.
‡ I = Input, O = Output, Z = High impedance
§ PU = pin has internal pullup; PD = pin has internal pulldown. Pullup/pulldown strength is given in Section 6.3. The pullups/pulldowns are enabled in boundary-scan mode.

Table 2−2. Signal Descriptions† (Continued)

NAME	PIN NO.			I/O/Z‡	PU/PD§	DESCRIPTION
	179-PIN GHH AND ZHH	176-PIN PGF	128-PIN PBK			
POWER SIGNALS (CONTINUED)						
V_{SS}	G4	19	17			Core and Digital I/O Ground Pins
V_{SS}	K1	32	26			
V_{SS}	L2	38	30			
V_{SS}	P4	52	39			
V_{SS}	K6	58	−			
V_{SS}	P8	70	53			
V_{SS}	M10	78	59			
V_{SS}	L11	86	62			
V_{SS}	K13	99	73			
V_{SS}	J14	105	−			
V_{SS}	G13	113	−			
V_{SS}	E14	120	88			
V_{SS}	B14	129	95			
V_{SS}	D10	142	−			
V_{SS}	C10	−	103			
V_{SS}	B8	153	109			
V_{DDIO}	J4	31	25			3.3-V I/O Digital Power Pins
V_{DDIO}	L7	64	49			
V_{DDIO}	L10	81	−			
V_{DDIO}	N14	−	−			
V_{DDIO}	G11	114	83			
V_{DDIO}	E9	145	104			
V_{DDIO}	N8	69	52			
GPIO OR EVA SIGNALS						
GPIOA0 PWM1 (O)	M12	92	68	I/O/Z	PU	GPIO or PWM Output Pin #1
GPIOA1 PWM2 (O)	M14	93	69	I/O/Z	PU	GPIO or PWM Output Pin #2
GPIOA2 PWM3 (O)	L12	94	70	I/O/Z	PU	GPIO or PWM Output Pin #3
GPIOA3 PWM4 (O)	L13	95	71	I/O/Z	PU	GPIO or PWM Output Pin #4
GPIOA4/PWM5 (O)	K11	98	72	I/O/Z	PU	GPIO or PWM Output Pin #5
GPIOA5 PWM6 (O)	K14	101	75	I/O/Z	PU	GPIO or PWM Output Pin #6
GPIOA6 T1PWM_T1CMP (I)	J11	102	76	I/O/Z	PU	GPIO or Timer 1 Output

† Typical drive strength of the output buffer for all pins is 4 mA except for TDO, XCLKOUT, XF, XINTF, EMU0, and EMU1 pins, which are 8 mA.
‡ I = Input, O = Output, Z = High impedance
§ PU = pin has internal pullup; PD = pin has internal pulldown. Pullup/pulldown strength is given in Section 6.3. The pullups/pulldowns are enabled in boundary-scan mode.

Table 2−2. Signal Descriptions† (Continued)

NAME	PIN NO.			I/O/Z‡	PU/PD§	DESCRIPTION
	179-PIN GHH AND ZHH	176-PIN PGF	128-PIN PBK			
GPIOA7 T2PWM_T2CMP (I)	J13	104	77	I/O/Z	PU	GPIO or Timer 2 Output
GPIO OR EVA SIGNALS (CONTINUED)						
GPIOA8 CAP1_QEP1 (I)	H10	106	78	I/O/Z	PU	GPIO or Capture Input #1
GPIOA9 CAP2_QEP2 (I)	H11	107	79	I/O/Z	PU	GPIO or Capture Input #2
GPIOA10/ CAP3_QEPI1 (I)	H12	109	80	I/O/Z	PU	GPIO or Capture Input #3
GPIOA11 TDIRA (I)	F14	116	85	I/O/Z	PU	GPIO or Timer Direction
GPIOA12 TCLKINA (I)	F13	117	86	I/O/Z	PU	GPIO or Timer Clock Input
GPIOA13 C1TRIP (I)	E13	122	89	I/O/Z	PU	GPIO or Compare 1 Output Trip
GPIOA14 C2TRIP (I)	E11	123	90	I/O/Z	PU	GPIO or Compare 2 Output Trip
GPIOA15 C3TRIP (I)	F10	124	91	I/O/Z	PU	GPIO or Compare 3 Output Trip
GPIOB OR EVB SIGNALS						
GPIOB0 PWM7 (O)	N2	45	33	I/O/Z	PU	GPIO or PWM Output Pin #7
GPIOB1 PWM8 (O)	P2	46	34	I/O/Z	PU	GPIO or PWM Output Pin #8
GPIOB2 PWM9 (O)	N3	47	35	I/O/Z	PU	GPIO or PWM Output Pin #9
GPIOB3 PWM10 (O)	P3	48	36	I/O/Z	PU	GPIO or PWM Output Pin #10
GPIOB PWM11 (O)	L4	49	37	I/O/Z	PU	GPIO or PWM Output Pin #11
GPIOB5 PWM12 (O)	M4	50	38	I/O/Z	PU	GPIO or PWM Output Pin #12
GPIOB6/ T3PWM_T3CMP (I)	K5	53	40	I/O/Z	PU	GPIO or Timer 3 Output
GPIOB7/ T4PWM_T4CMP (I)	N5	55	41	I/O/Z	PU	GPIO or Timer 4 Output
GPIOB8/CAP4_QEP3 (I)	M5	57	43	I/O/Z	PU	GPIO or Capture Input #4
GPIOB9/CAP5_QEP4 (I)	M6	59	44	I/O/Z	PU	GPIO or Capture Input #5
GPIOB10/CAP6_QEPI2 (I)	P6	60	45	I/O/Z	PU	GPIO or Capture Input #6
GPIOB11/TDIRB (I)	L8	71	54	I/O/Z	PU	GPIO or Timer Direction
GPIOB12/TCLKINB (I)	K8	72	55	I/O/Z	PU	GPIO or Timer Clock Input

† Typical drive strength of the output buffer for all pins is 4 mA except for TDO, XCLKOUT, XF, XINTF, EMU0, and EMU1 pins, which are 8 mA.
‡ I = Input, O = Output, Z = High impedance
§ PU = pin has internal pullup; PD = pin has internal pulldown. Pullup/pulldown strength is given in Section 6.3. The pullups/pulldowns are enabled in boundary-scan mode.

Table 2−2. Signal Descriptions† (Continued)

NAME	PIN NO.			I/O/Z‡	PU/PD§	DESCRIPTION
	179-PIN GHH AND ZHH	176-PIN PGF	128-PIN PBK			
GPIOB13/C4TRIP (I)	N6	61	46	I/O/Z	PU	GPIO or Compare 4 Output Trip
GPIOB14/C5TRIP (I)	L6	62	47	I/O/Z	PU	GPIO or Compare 5 Output Trip
GPIOB15/C6TRIP (I)	K7	63	48	I/O/Z	PU	GPIO or Compare 6 Output Trip
GPIOD OR EVA SIGNALS						
GPIOD0/ T1CTRIP_PDPINTA (I)	H14	110	81	I/O/Z	PU	Timer 1 Compare Output Trip
GPIOD1/ T2CTRIP/EVASOC (I)	G10	115	84	I/O/Z	PU	Timer 2 Compare Output Trip or External ADC Start-of-Conversion EV-A
GPIOD OR EVB SIGNALS						
GPIOD5/ T3CTRIP_PDPINTB (I)	P10	79	60	I/O/Z	PU	Timer 3 Compare Output Trip
GPIOD6/ T4CTRIP/EVBSOC (I)	P11	83	61	I/O/Z	PU	Timer 4 Compare Output Trip or External ADC Start-of-Conversion EV-B
GPIOE OR INTERRUPT SIGNALS						
GPIOE0/XINT1_XBIO (I)	D9	149	106	I/O/Z	−	GPIO or XINT1 or XBIO input
GPIOE1/ XINT2_ADCSOC (I)	D8	151	108	I/O/Z	−	GPIO or XINT2 or ADC start of conversion
GPIOE2 XNMI_XINT13 (I)	E8	150	107	I/O/Z	PU	GPIO or XNMI or XINT13
GPIOF OR SPI SIGNALS						
GPIOF0 SPISIMOA (O)	M1	40	31	I/O/Z	−	GPIO or SPI slave in, master out
GPIOF1 SPISOMIA (I)	N1	41	32	I/O/Z	−	GPIO or SPI slave out, master in
GPIOF2 SPICLKA (I/O)	K2	34	27	I/O/Z	−	GPIO or SPI clock
GPIOF3 SPISTEA (I/O)	K4	35	28	I/O/Z	−	GPIO or SPI slave transmit enable
GPIOF OR SCI-A SIGNALS						
GPIOF4 SCITXDA (O)	C7	155	111	I/O/Z	PU	GPIO or SCI asynchronous serial port TX data
GPIOF5 SCIRXDA (I)	A7	157	112	I/O/Z	PU	GPIO or SCI asynchronous serial port RX data
GPIOF OR CAN SIGNALS						
GPIOF6 CANTXA (O)	N12	87	64	I/O/Z	PU	GPIO or eCAN transmit data
GPIOF7 CANRXA (I)	N13	89	65	I/O/Z	PU	GPIO or eCAN receive data
GPIOF OR McBSP SIGNALS						

† Typical drive strength of the output buffer for all pins is 4 mA except for TDO, XCLKOUT, XF, XINTF, EMU0, and EMU1 pins, which are 8 mA.
‡ I = Input, O = Output, Z = High impedance
§ PU = pin has internal pullup; PD = pin has internal pulldown. Pullup/pulldown strength is given in Section 6.3. The pullups/pulldowns are enabled in boundary-scan mode.

Table 2−2. Signal Descriptions† (Continued)

NAME	PIN NO.			I/O/Z‡	PU/PD§	DESCRIPTION
	179-PIN GHH AND ZHH	176-PIN PGF	128-PIN PBK			
GPIOF8 MCLKXA (I/O)	J1	28	23	I/O/Z	PU	GPIO or transmit clock
GPIOF9 MCLKRA (I/O)	H2	25	21	I/O/Z	PU	GPIO or receive clock
GPIOF10 MFSXA (I/O)	H4	26	22	I/O/Z	PU	GPIO or transmit frame synch
GPIOF11 MFSRA (I/O)	J2	29	24	I/O/Z	PU	GPIO or receive frame synch
GPIOF12 MDXA (O)	G1	22	19	I/O/Z	−	GPIO or transmitted serial data
GPIOF13 MDRA (I)	G2	20	18	I/O/Z	PU	GPIO or received serial data
GPIOF OR XF CPU OUTPUT SIGNAL						
GPIOF14 XF_XPLLDIS (O)	A11	140	101	I/O/Z	PU	This pin has three functions: 1) XF − General-purpose output pin. 2) XPLLDIS − This pin will be sampled during reset to check if the PLL needs to be disabled. The PLL will be disabled if this pin is sensed low. HALT and STANDBY modes cannot be used when the PLL is disabled. 3) GPIO − GPIO function
GPIOG OR SCI-B SIGNALS						
GPIOG4/SCITXDB (O)	P14	90	66	I/O/Z	−	GPIO or SCI asynchronous serial port transmit data
GPIOG5/SCIRXDB (I)	M13	91	67	I/O/Z	−	GPIO or SCI asynchronous serial port receive data

† Typical drive strength of the output buffer for all pins is 4 mA except for TDO, XCLKOUT, XF, XINTF, EMU0, and EMU1 pins, which are 8 mA.
‡ I = Input, O = Output, Z = High impedance
§ PU = pin has internal pullup; PD = pin has internal pulldown. Pullup/pulldown strength is given in Section 6.3. The pullups/pulldowns are enabled in boundary-scan mode.

NOTE:

Other than the power supply pins, no pin should be driven before the 3.3-V rail has reached recommended operating conditions. However, it is acceptable for an I/O pin to ramp along with the 3.3-V supply.

3 Functional Overview

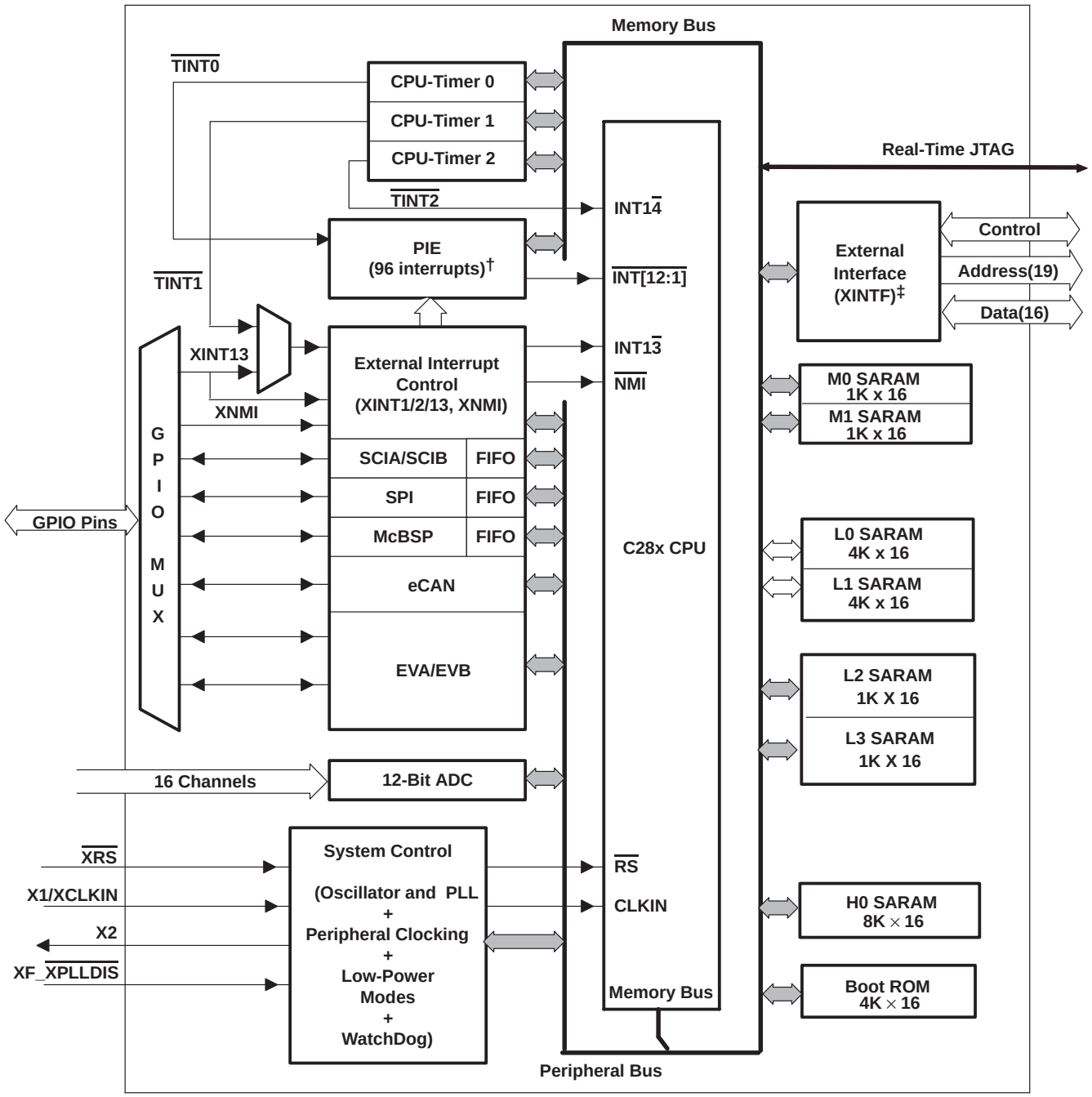

† 45 of the possible 96 interrupts are used on the devices.
‡ XINTF is available on the R2812 devices only.

Figure 3−1. Functional Block Diagram

3.1 Memory Map

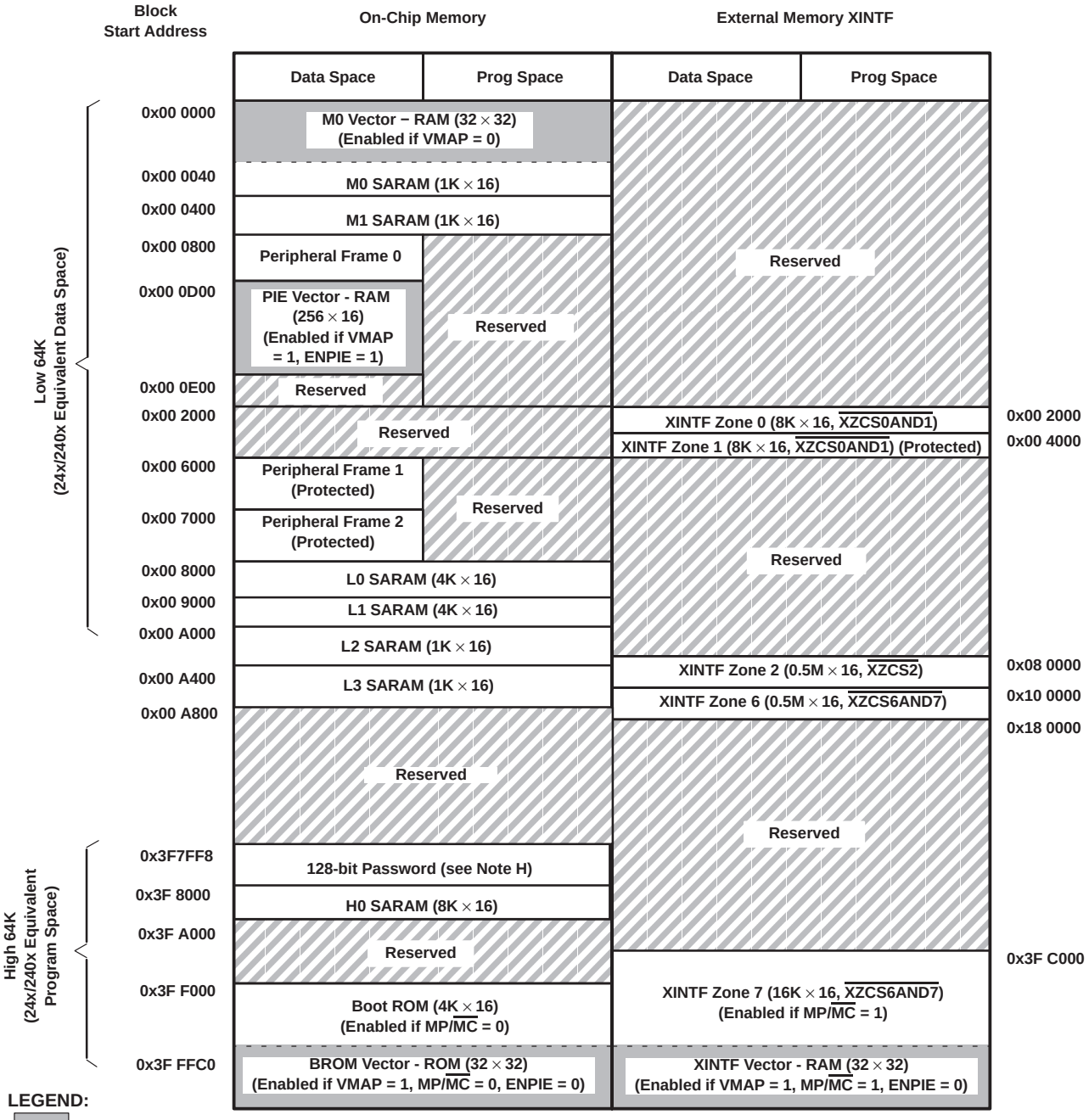

NOTES: A. Memory blocks are not to scale.
B. Reserved locations are reserved for future expansion. Application should not access these areas.
C. Boot ROM and Zone 7 memory maps are active either in on-chip or XINTF zone depending on MP/$\overline{MC}$, not in both.
D. Peripheral Frame 0, Peripheral Frame 1, and Peripheral Frame 2 memory maps are restricted to data memory only. User program cannot access these memory maps in program space.
E. "Protected" means the order of Write followed by Read operations is preserved rather than the pipeline order.
F. Certain memory ranges are EALLOW protected against spurious writes after configuration.
G. Zones 0 and 1 and Zones 6 and 7 share the same chip select; hence, these memory blocks have mirrored locations.
H. The passwords are set to all ones.

Figure 3−2. R2812 Memory Map (See Notes A through H)

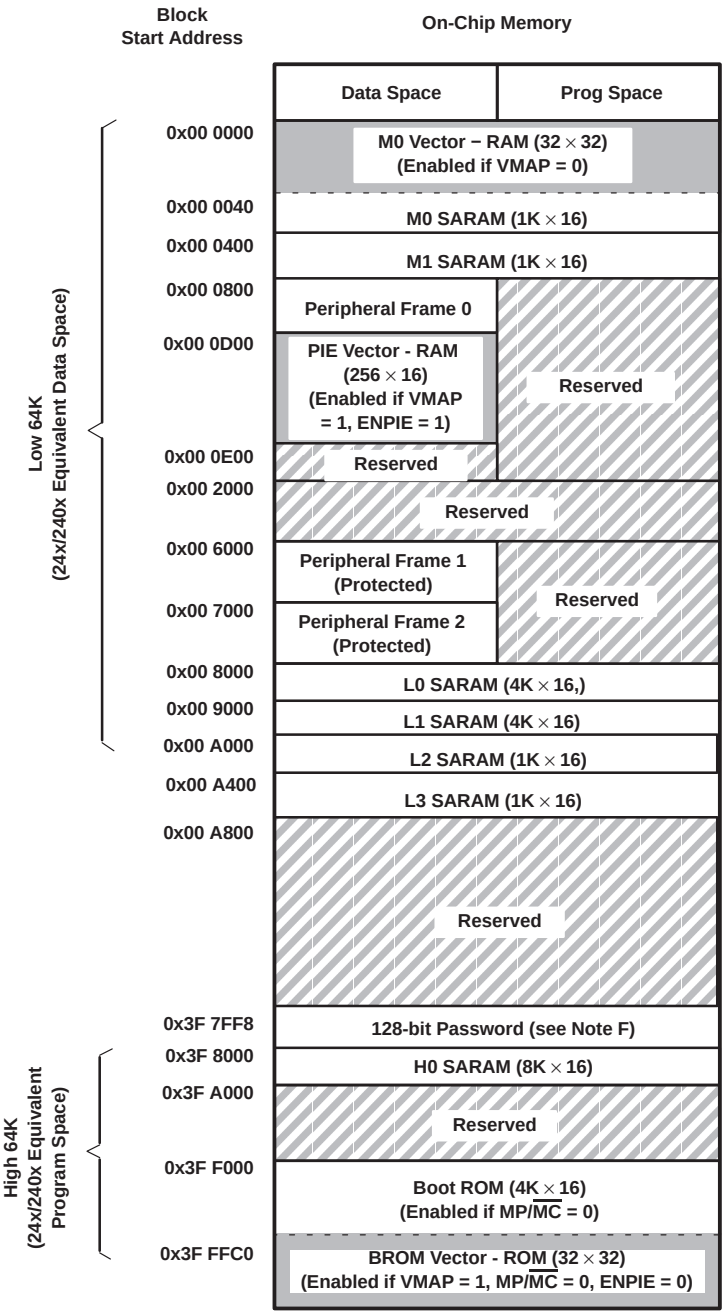

LEGEND:

Only one of these vector maps—M0 vector, PIE vector, BROM vector, XINTF vector—should be enabled at a time.

NOTES: A. Memory blocks are not to scale.
B. Reserved locations are reserved for future expansion. Application should not access these areas.
C. Peripheral Frame 0, Peripheral Frame 1, and Peripheral Frame 2 memory maps are restricted to data memory only. User program cannot access these memory maps in program space.
D. “Protected” means the order of Write followed by Read operations is preserved rather than the pipeline order.
E. Certain memory ranges are EALLOW protected against spurious writes after configuration.
F. The passwords are set to all ones.

Figure 3−3. R2811 Memory Map (See Notes A through F)

The low 64K of the memory-address range maps into the data space of the 240x. The “High 64K” of the memory address range maps into the program space of the 24x/240x. 24x/240x-compatible code will only execute from the “High 64K” memory area. Hence, the top 32K of H0 SARAM block can be used to run 24x/240x-compatible code (if MP/$\overline{MC}$ mode is low) or, on the 2812, code can be executed from XINTF Zone 7 (if MP/$\overline{MC}$ mode is high).

The XINTF consists of five independent zones. One zone has its own chip select and the remaining four zones share two chip selects. Each zone can be programmed with its own timing (wait states) and to either sample or ignore external ready signal. This makes interfacing to external peripherals easy and glueless.

NOTE:

The chip selects of XINTF Zone 0 and Zone 1 are merged together into a single chip select ($\overline{XZCS0AND1}$); and the chip selects of XINTF Zone 6 and Zone 7 are merged together into a single chip select ($\overline{XZCS6AND7}$). See Section 3.5, “External Interface, XINTF (2812 only)”, for details.

Peripheral Frame 1, Peripheral Frame 2, and XINTF Zone 1 are grouped together so as to enable these blocks to be “write/read peripheral block protected”. The “protected” mode ensures that all accesses to these blocks happen as written. Because of the C28x pipeline, a write immediately followed by a read, to different memory locations, will appear in reverse order on the memory bus of the CPU. This can cause problems in certain peripheral applications where the user expected the write to occur first (as written). The C28x CPU supports a block protection mode where a region of memory can be protected so as to make sure that operations occur as written (the penalty is extra cycles are added to align the operations). This mode is programmable and by default, it will protect the selected zones.

On the 2812, at reset, XINTF Zone 7 is accessed if the XMP/$\overline{MC}$ pin is pulled high. This signal selects microprocessor or microcomputer mode of operation. In microprocessor mode, Zone 7 is mapped to high memory such that the vector table is fetched externally. The Boot ROM is disabled in this mode. In microcomputer mode, Zone 7 is disabled such that the vectors are fetched from Boot ROM. This allows the user to either boot from on-chip memory or from off-chip memory. The state of the XMP/$\overline{MC}$ signal on reset is stored in an MP/$\overline{MC}$ mode bit in the XINTCNF2 register. The user can change this mode in software and hence control the mapping of Boot ROM and XINTF Zone 7. No other memory blocks are affected by XMP/$\overline{MC}$.

I/O space is not supported on the 2812 XINTF.

The wait states for the various spaces in the memory map area are listed in Table 3−1.

Table 3−1. Wait States

AREA	WAIT-STATES	COMMENTS
M0 and M1 SARAMs	0-wait	Fixed
Peripheral Frame 0	0-wait	Fixed
Peripheral Frame 1	0-wait (writes) 2-wait (reads)	Fixed
Peripheral Frame 2	0-wait (writes) 2-wait (reads)	Fixed
L0, L1, L2, and L3 SARAMs	0-wait	
H0 SARAM	0-wait	Fixed
Boot-ROM	1-wait	Fixed
XINTF	Programmable, 1-wait minimum	Programmed via the XINTF registers. Cycles can be extended by external memory or peripheral. 0-wait operation is not possible.

3.2 Brief Descriptions

3.2.1 C28x CPU

The C28x™ DSP generation is the newest member of the TMS320C2000™ DSP platform. The C28x is source code compatible to the 24x/240x DSP devices, hence existing 240x users can leverage their significant software investment. Additionally, the C28x is a very efficient C/C++ engine, hence enabling users to develop not only their system control software in a high-level language, but also enables math algorithms to be developed using C/C++. The C28x is as efficient in DSP math tasks as it is in system control tasks that typically are handled by microcontroller devices. This efficiency removes the need for a second processor in many systems. The 32 x 32-bit MAC capabilities of the C28x and its 64-bit processing capabilities, enable the C28x to efficiently handle higher numerical resolution problems that would otherwise demand a more expensive floating-point processor solution. Add to this the fast interrupt response with automatic context save of critical registers, resulting in a device that is capable of servicing many asynchronous events with minimal latency. The C28x has an 8-level-deep protected pipeline with pipelined memory accesses. This pipelining enables the C28x to execute at high speeds without resorting to expensive high-speed memories. Special branch-look-ahead hardware minimizes the latency for conditional discontinuities. Special store conditional operations further improve performance.

3.2.2 Memory Bus (Harvard Bus Architecture)

As with many DSP type devices, multiple busses are used to move data between the memories and peripherals and the CPU. The R28x memory bus architecture contains a program read bus, data read bus and data write bus. The program read bus consists of 22 address lines and 32 data lines. The data read and write busses consist of 32 address lines and 32 data lines each. The 32-bit-wide data busses enable single cycle 32-bit operations. The multiple-bus architecture, commonly termed “Harvard Bus”, enables the R28x to fetch an instruction, read a data value, and write a data value in a single cycle. All peripherals and memories attached to the memory bus prioritize memory accesses.

Generally, the priority of memory bus accesses can be summarized as follows:

Highest:	Data Writes	(Simultaneous data and program writes cannot occur on the memory bus.)
	Program Writes	(Simultaneous data and program writes cannot occur on the memory bus.)
	Data Reads	
	Program Reads	(Simultaneous program reads and fetches cannot occur on the memory bus.)
Lowest:	Fetches	(Simultaneous program reads and fetches cannot occur on the memory bus.)

3.2.3 Peripheral Bus

To enable migration of peripherals between various Texas Instruments (TI) DSP family of devices, R281x adopts a peripheral bus standard for peripheral interconnect. The peripheral bus bridge multiplexes the various busses that make up the processor “Memory Bus” into a single bus consisting of 16 address lines and 16 or 32 data lines and associated control signals. Two versions of the peripheral bus are supported on R281x. One version only supports 16-bit accesses (called peripheral frame 2) and this retains compatibility with C240x-compatible peripherals. The other version supports both 16- and 32-bit accesses (called peripheral frame 1).

C28x and TMS320C2000 are trademarks of Texas Instruments.

3.2.4 Real-Time JTAG and Analysis

R281x implements the standard IEEE 1149.1 JTAG interface. Additionally, R281x supports real-time mode of operation whereby the contents of memory, peripheral and register locations can be modified while the processor is running and executing code and servicing interrupts. The user can also single step through non-time critical code while enabling time-critical interrupts to be serviced without interference. R281x implements the real-time mode in hardware within the CPU. This is a unique feature to R281x, no software monitor is required. Additionally, special analysis hardware is provided which allows the user to set hardware breakpoint or data/address watch-points and generate various user selectable break events when a match occurs.

3.2.5 External Interface (XINTF) (2812 Only)

This asynchronous interface consists of 19 address lines, 16 data lines, and three chip-select lines. The chip-select lines are mapped to five external zones, Zones 0, 1, 2, 6, and 7. Zones 0 and 1 share a single chip-select; Zones 6 and 7 also share a single chip-select. Each of the five zones can be programmed with a different number of wait states, strobe signal setup and hold timing and each zone can be programmed for extending wait states externally or not. The programmable wait-state, chip-select and programmable strobe timing enables glueless interface to external memories and peripherals.

3.2.6 M0, M1 SARAMs

All C28x devices contain these two blocks of single access memory, each 1K x 16 in size. The stack pointer points to the beginning of block M1 on reset. The M0 block overlaps the 240x device B0, B1, B2 RAM blocks and hence the mapping of data variables on the 240x devices can remain at the same physical address on C28x devices. The M0 and M1 blocks, like all other memory blocks on C28x devices, are mapped to both program and data space. Hence, the user can use M0 and M1 to execute code or for data variables. The partitioning is performed within the linker. The C28x device presents a unified memory map to the programmer. This makes for easier programming in high-level languages.

3.2.7 L0, L1, L2, L3, H0 SARAMs

R281x contains an additional 18K x 16 of single-access RAM (SARAM), divided into 5 blocks (4K + 4K +1K +1K+ 8K). Each block can be independently accessed, minimizing pipeline stalls. Each block is mapped to both program and data space.

3.2.8 Boot ROM

The Boot ROM is factory-programmed with boot-loading software. The Boot ROM program executes after device reset and checks several GPIO pins to determine which boot mode to enter. For example, the user can select to download new software to internal RAM through one of several serial ports. Other boot modes exist as well. The Boot ROM also contains standard tables, such as SIN/COS waveforms, for use in math-related algorithms. Table 3−2 shows the details of how various boot modes may be invoked. See the *TMS320F28x DSP Boot ROM Reference Guide* (literature number SPRS095), for more information.

Table 3−2. Boot Mode Selection

BOOT MODE SELECTED	GPIOF4/ (SCITXDA)	GPIOF12/ (MDXA)	GPIOF3/ (SPISTEA)	GPIOF2/ (SPICLK)‡
(Internal PU status†)	PU	No PU	No PU	No PU
Reserved	1	x	x	x
Call SPI_Boot to load from an external serial SPI EEPROM	0	1	x	x
Call SCI_Boot to load from SCI-A	0	0	1	1
Jump to H0 SARAM address 0x3F 8000§	0	0	1	0
Reserved	0	0	0	1
Call Parallel_Boot to load from GPIO Port B	0	0	0	0

† PU = pin has an internal pullup No PU = pin does not have an internal pullup
‡ Extra care must be taken due to any effect toggling SPICLK to select a boot mode may have on external logic.
§ If the boot mode selected is H0, then no external code is loaded by the bootloader.

3.2.9 Security

R281x devices contain a non−utilizable code security module for compatibility with C281x and F281x devices. The passwords for the security module are hard-wired in the device as all 0xFFFF. After a device reset, the L0 and L1 SARAM blocks are in a locked condition until a dummy read of the passwords is performed. The R281x Boot ROM performs a dummy read of the password locations. If execution after reset begins directly in external memory on R2812 devices (i.e., MP/$\overline{MC}$ =1), the user should perform 8 dummy reads, one each from address 0x3F7FF8 through 0x3F7FFF.

3.2.10 Peripheral Interrupt Expansion (PIE) Block

The PIE block serves to multiplex numerous interrupt sources into a smaller set of interrupt inputs. The PIE block can support up to 96 peripheral interrupts. On R281x, 45 of the possible 96 interrupts are used by peripherals. The 96 interrupts are grouped into blocks of 8 and each group is fed into 1 of 12 CPU interrupt lines (INT1 to $\overline{INT12}$). Each of the 96 interrupts is, supported by its own vector stored in a dedicated RAM block that can be overwritten by the user. The vector is, automatically fetched by the CPU on servicing the interrupt. It takes 8 CPU clock cycles to fetch the vector and save critical CPU registers. Hence the CPU can quickly respond to interrupt events. Prioritization of interrupts is controlled in hardware and software. Each individual interrupt can be enabled/disabled within the PIE block.

3.2.11 External Interrupts (XINT1, 2, 13, XNMI)

R281x supports three masked external interrupts (XINT1, 2, 13). XINT13 is combined with one non-masked external interrupt (XNMI). The combined signal name is XNMI_XINT13. Each of the interrupts can be selected for negative or positive edge triggering and can also be enabled/disabled (including the XNMI). The masked interrupts also contain a 16-bit free running up counter, which is reset to zero when a valid interrupt edge is detected. This counter can be used to accurately time stamp the interrupt.

3.2.12 Oscillator and PLL

R281x can be clocked by an external oscillator or by a crystal attached to the on-chip oscillator circuit. A PLL is provided supporting up to 10-input clock-scaling ratios. The PLL ratios can be changed on-the-fly in software, enabling the user to scale back on operating frequency if lower power operation is desired. Refer to the Electrical Specification section for timing details. The PLL block can be set in bypass mode.

3.2.13 Watchdog

R281x supports a watchdog timer. The user software must regularly reset the watchdog counter within a certain time frame; otherwise, the watchdog will generate a reset to the processor. The watchdog can be disabled if necessary.

3.2.14 Peripheral Clocking

The clocks to each individual peripheral can be enabled/disabled so as to reduce power consumption when a peripheral is not in use. Additionally, the system clock to the serial ports (except eCAN) and the event managers, CAP and QEP blocks can be scaled relative to the CPU clock. This enables the timing of peripherals to be decoupled from increasing CPU clock speeds.

3.2.15 Low-Power Modes

R281x devices are full static CMOS devices. Three low-power modes are provided:

IDLE:	Place CPU into low-power mode. Peripheral clocks may be turned off selectively and only those peripherals that need to function during IDLE are left operating. An enabled interrupt from an active peripheral will wake the processor from IDLE mode.
STANDBY:	Turn off clock to CPU and peripherals. This mode leaves the oscillator and PLL functional. An external interrupt event will wake the processor and the peripherals. Execution begins on the next valid cycle after detection of the interrupt event.
HALT:	Turn off oscillator. This mode basically shuts down the device and places it in the lowest possible power consumption mode. Only a reset or XNMI will wake the device from this mode.

3.2.16 Peripheral Frames 0, 1, 2 (PFn)

R281x segregates peripherals into three sections. The mapping of peripherals is as follows:

PF0:	XINTF:	External Interface Configuration Registers (2812 only)
	PIE:	PIE Interrupt Enable and Control Registers Plus PIE Vector Table
	Timers:	CPU-Timers 0, 1, 2 Registers
PF1:	eCAN:	eCAN Mailbox and Control Registers
PF2:	SYS:	System Control Registers
	GPIO:	GPIO MUX Configuration and Control Registers
	EV:	Event Manager (EVA/EVB) Control Registers
	McBSP:	McBSP Control and TX/RX Registers
	SCI:	Serial Communications Interface (SCI) Control and RX/TX Registers
	SPI:	Serial Peripheral Interface (SPI) Control and RX/TX Registers
	ADC:	12-Bit ADC Registers

3.2.17 General-Purpose Input/Output (GPIO) Multiplexer

Most of the peripheral signals are multiplexed with general-purpose I/O (GPIO) signals. This enables the user to use a pin as GPIO if the peripheral signal or function is not used. On reset, all GPIO pins are configured as inputs. The user can then individually program each pin for GPIO mode or Peripheral Signal mode. For specific inputs, the user can also select the number of input qualification cycles. This is to filter unwanted noise glitches.

3.2.18 32-Bit CPU-Timers (0, 1, 2)

CPU-Timers 0, 1, and 2 are identical 32-bit timers with presettable periods and with 16-bit clock prescaling. The timers have a 32-bit count down register, which generates an interrupt when the counter reaches zero. The counter is decremented at the CPU clock speed divided by the prescale value setting. When the counter reaches zero, it is automatically reloaded with a 32-bit period value. CPU-Timer 2 is reserved for Real-Time OS (RTOS)/BIOS applications. CPU-Timer 2 is reserved for the DSP/BIOS real-time operating system (DSP/BIOS RTOS), and is connected to INT14 of the CPU. CPU-Timer 1 is for general use, and is connected to INT13 of the CPU. CPU-Timer 0 is also for general use, and is connected to the PIE block.

3.2.19 Control Peripherals

R281x supports the following peripherals which are used for embedded control and communication:

EV: The event manager module includes general-purpose timers, full-compare/PWM units, capture inputs (CAP) and quadrature-encoder pulse (QEP) circuits. Two such event managers are provided which enable two three-phase motors to be driven or four two-phase motors. The event managers on R281x are compatible to the event managers on the 240x devices (with some minor enhancements).

ADC: The ADC block is a 12-bit converter, single ended, 16-channels. It contains two sample-and-hold units for simultaneous sampling.

3.2.20 Serial Port Peripherals

R281x supports the following serial communication peripherals:

eCAN: This is the enhanced version of the CAN peripheral. It supports 32 mailboxes, time stamping of messages, and is CAN 2.0B-compliant.

McBSP: This is the multichannel buffered serial port that is used to connect to E1/T1 lines, phone-quality codecs for modem applications or high-quality stereo-quality Audio DAC devices. The McBSP receive and transmit registers are supported by a 16-level FIFO. This significantly reduces the overhead for servicing this peripheral.

SPI: The SPI is a high-speed, synchronous serial I/O port that allows a serial bit stream of programmed length (one to sixteen bits) to be shifted into and out of the device at a programmable bit-transfer rate. Normally, the SPI is used for communications between the DSP controller and external peripherals or another processor. Typical applications include external I/O or peripheral expansion through devices such as shift registers, display drivers, and ADCs. Multi-device communications are supported by the master/slave operation of the SPI. On R281x, the port supports a 16-level, receive and transmit FIFO for reducing servicing overhead.

SCI: The serial communications interface is a two-wire asynchronous serial port, commonly known as UART. On R281x, the port supports a 16-level, receive and transmit FIFO for reducing servicing overhead.

3.3 Register Map

R281x devices contain three peripheral register spaces. The spaces are categorized as follows:

- Peripheral Frame 0: These are peripherals that are mapped directly to the CPU memory bus. See Table 3−3.
- Peripheral Frame 1: These are peripherals that are mapped to the 32-bit peripheral bus. See Table 3−4.
- Peripheral Frame 2: These are peripherals that are mapped to the 16-bit peripheral bus. See Table 3−5.

Table 3−3. Peripheral Frame 0 Registers†

NAME	ADDRESS RANGE	SIZE (x16)	ACCESS TYPE‡
Device Emulation Registers	0x00 0880 0x00 09FF	384	EALLOW protected
reserved	0x00 0A00 0x00 0B1F	288	
XINTF Registers	0x00 0B20 0x00 0B3F	32	Not EALLOW protected
reserved	0x00 0B40 0x00 0BFF	192	
CPU-TIMER0/1/2 Registers	0x00 0C00 0x00 0C3F	64	Not EALLOW protected
reserved	0x00 0C40 0x00 0CDF	160	
PIE Registers	0x00 0CE0 0x00 0CFF	32	Not EALLOW protected
PIE Vector Table	0x00 0D00 0x00 0DFF	256	EALLOW protected
Reserved	0x00 0E00 0x00 0FFF	512	

† Registers in Frame 0 support 16-bit and 32-bit accesses.
‡ If registers are EALLOW protected, then writes cannot be performed until the user executes the EALLOW instruction. The EDIS instruction disables writes. This prevents stray code or pointers from corrupting register contents.

Table 3−4. Peripheral Frame 1 Registers¶

NAME	ADDRESS RANGE	SIZE (x16)	ACCESS TYPE
eCAN Registers	0x00 6000 0x00 60FF	256 (128 x 32)	Some eCAN control registers (and selected bits in other eCAN control registers) are EALLOW-protected.
eCAN Mailbox RAM	0x00 6100 0x00 61FF	256 (128 x 32)	Not EALLOW-protected
reserved	0x00 6200 0x00 6FFF	3584	

¶ The eCAN control registers only support 32-bit read/write operations. All 32-bit accesses are aligned to even address boundaries.

Table 3−5. Peripheral Frame 2 Registers†

NAME	ADDRESS RANGE	SIZE (x16)	ACCESS TYPE
reserved	0x00 7000 0x00 700F	16	
System Control Registers	0x00 7010 0x00 702F	32	EALLOW Protected
reserved	0x00 7030 0x00 703F	16	
SPI-A Registers	0x00 7040 0x00 704F	16	Not EALLOW Protected

† Peripheral Frame 2 only allows 16-bit accesses. All 32-bit accesses are ignored (invalid data may be returned or written).

Peripheral Frame 2 Registers† (Continued)

NAME	ADDRESS RANGE	SIZE (x16)	ACCESS TYPE
SCI-A Registers	0x00 7050 0x00 705F	16	Not EALLOW Protected
reserved	0x00 7060 0x00 706F	16	
External Interrupt Registers	0x00 7070 0x00 707F	16	Not EALLOW Protected
reserved	0x00 7080 0x00 70BF	64	
GPIO MUX Registers	0x00 70C0 0x00 70DF	32	EALLOW Protected
GPIO Data Registers	0x00 70E0 0x00 70FF	32	Not EALLOW Protected
ADC Registers	0x00 7100 0x00 711F	32	Not EALLOW Protected
reserved	0x00 7120 0x00 73FF	736	
EV-A Registers	0x00 7400 0x00 743F	64	Not EALLOW Protected
reserved	0x00 7440 0x00 74FF	192	
EV-B Registers	0x00 7500 0x00 753F	64	Not EALLOW Protected
reserved	0x00 7540 0x00 774F	528	
SCI-B Registers	0x00 7750 0x00 775F	16	Not EALLOW Protected
reserved	0x00 7760 0x00 77FF	160	
McBSP Registers	0x00 7800 0x00 783F	64	Not EALLOW Protected
reserved	0x00 7840 0x00 7FFF	1984	

† Peripheral Frame 2 only allows 16-bit accesses. All 32-bit accesses are ignored (invalid data may be returned or written).

3.4 Device Emulation Registers

These registers are used to control the protection mode of the C28x CPU and to monitor some critical device signals. The registers are defined in Table 3−6.

Table 3−6. Device Emulation Registers

NAME	ADDRESS RANGE	SIZE (x16)	DESCRIPTION
DEVICECNF	0x00 0880 0x00 0881	2	Device Configuration Register
PARTID	0x00 0882	1	0x0003 − R281x
REVID	0x00 0883	1	Revision ID Register (0x0001 − Silicon Rev. A) Revision ID Register (0x0002 − Silicon Rev. B)
PROTSTART	0x00 0884	1	Block Protection Start Address Register
PROTRANGE	0x00 0885	1	Block Protection Range Address Register
reserved	0x00 0886 0x00 09FF	378	

3.5 External Interface, XINTF (2812 Only)

This section gives a top-level view of the external interface (XINTF) that is implemented on the 2812 devices.

The external interface is a non-multiplexed asynchronous bus, similar to the C240x external interface. The external interface on the 2812 is mapped into five fixed zones shown in Figure 3−4.

Figure 3−4 shows the 2812 XINTF signals.

The operation and timing of the external interface, can be controlled by the registers listed in Table 3−7.

Table 3−7. XINTF Configuration and Control Register Mappings

NAME	ADDRESS	SIZE (x16)	DESCRIPTION
XTIMING0	0x00 0B20	2	XINTF Timing Register, Zone 0 can access as two 16-bit registers or one 32-bit register
XTIMING1	0x00 0B22	2	XINTF Timing Register, Zone 1 can access as two 16-bit registers or one 32-bit register
XTIMING2	0x00 0B24	2	XINTF Timing Register, Zone 2 can access as two 16-bit registers or one 32-bit register
XTIMING6	0x00 0B2C	2	XINTF Timing Register, Zone 6 can access as two 16-bit registers or one 32-bit register
XTIMING7	0x00 0B2E	2	XINTF Timing Register, Zone 7 can access as two 16-bit registers or one 32-bit register
XINTCNF2	0x00 0B34	2	XINTF Configuration Register can access as two 16-bit registers or one 32-bit register
XBANK	0x00 0B38	1	XINTF Bank Control Register
XREVISION	0x00 0B3A	1	XINTF Revision Register

3.5.1 Timing Registers

XINTF signal timing can be tuned to match specific external device requirements such as setup and hold times to strobe signals for contention avoidance and maximizing bus efficiency. The timing parameters can be configured individually for each zone. This allows the programmer to maximize the efficiency of the bus, based on the type of memory or peripheral that the user needs to access. All XINTF timing values are with respect to XTIMCLK, which is equal to or one-half of the SYSCLKOUT rate, as shown in Figure 6−26.

For detailed information on the XINTF timing and configuration register bit fields, see the *TMS320F28x DSP External Interface (XINTF) Reference Guide* (literature number SPRU067).

3.5.2 XREVISION Register

The XREVISION register contains a unique number to identify the particular version of XINTF used in the product. For the 2812, this register will be configured as described in Table 3−8.

Table 3−8. XREVISION Register Bit Definitions

BIT(S)	NAME	TYPE	RESET	DESCRIPTION
15−0	REVISION	R	0x0004	Current XINTF Revision. For internal use/reference. Test purposes only. Subject to change.

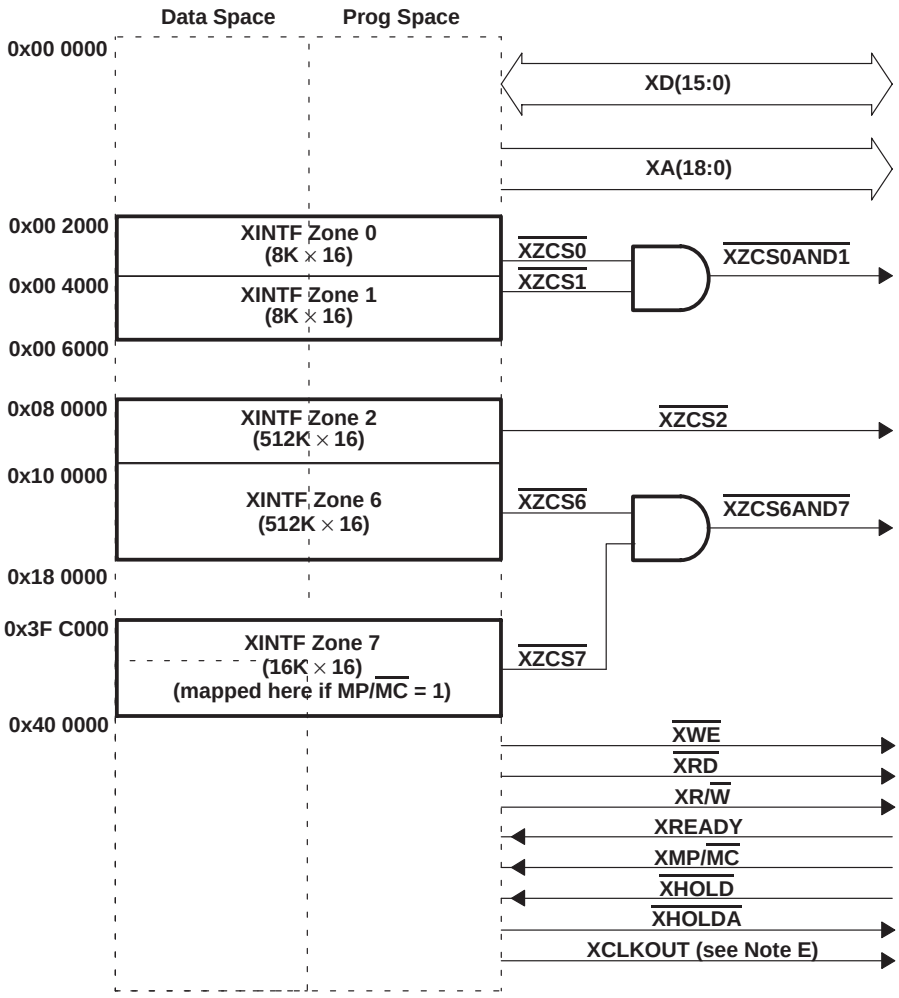

NOTES: A. The mapping of XINTF Zone 7 is dependent on the XMP/MC device input signal and the MP/MC mode bit (bit 8 of XINTCNF2 register). Zones 0, 1, 2, and 6 are always enabled.

B. Each zone can be programmed with different wait states, setup and hold timing, and is supported by zone chip selects (XZCS0AND1, XZCS2, XZCS6AND7), which toggle when an access to a particular zone is performed. These features enable glueless connection to many external memories and peripherals.

C. The chip selects for Zone 0 and 1 are ANDed internally together to form one chip select (XZCS0AND1). Any external memory that is connected to XZCS0AND1 is dually mapped to both Zones 0 and Zone 1.

D. The chip selects for Zone 6 and 7 are ANDed internally together to form one chip select (XZCS6AND7). Any external memory that is connected to XZCS6AND7 is dually mapped to both Zones 6 and Zone 7. This means that if Zone 7 is disabled (via the MP/MC mode) then any external memory is still accessible via Zone 6 address space.

E. XCLKOUT is also pinned out on the 2810 and 2811.

Figure 3−4. External Interface Block Diagram

3.6 Interrupts

Figure 3−5 shows how the various interrupt sources are multiplexed within R281x devices.

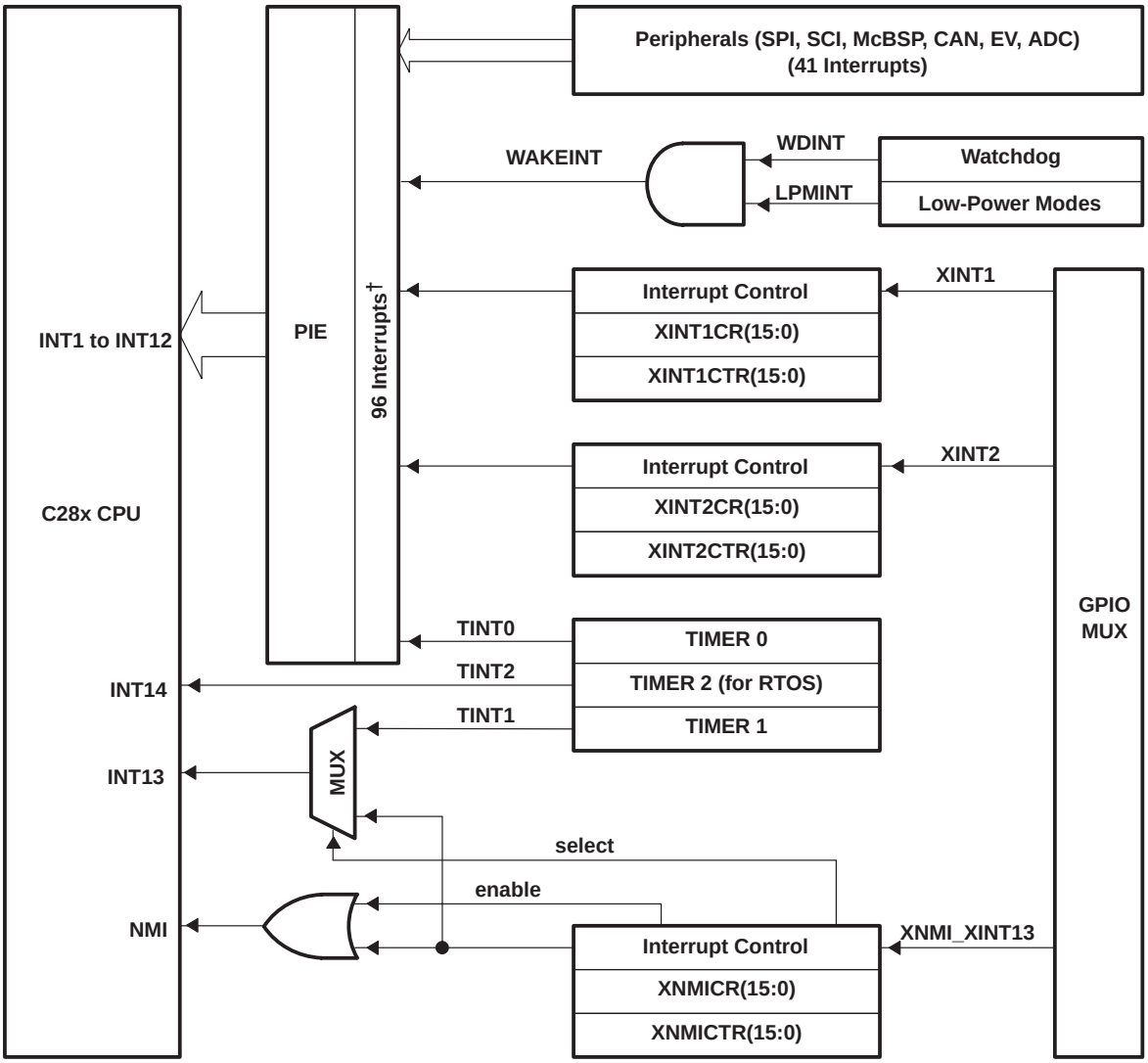

† Out of a possible 96 interrupts, 45 are currently used by peripherals.

Figure 3−5. Interrupt Sources

Figure 3−6 shows how the interrupts are multiplexed using the PIE block. Eight PIE block interrupts are grouped into one CPU interrupt. In total, 12 CPU interrupt groups, with 8 interrupts per group equals 96 possible interrupts. On R281x, 45 of these are used by peripherals as shown in Table 3−9.

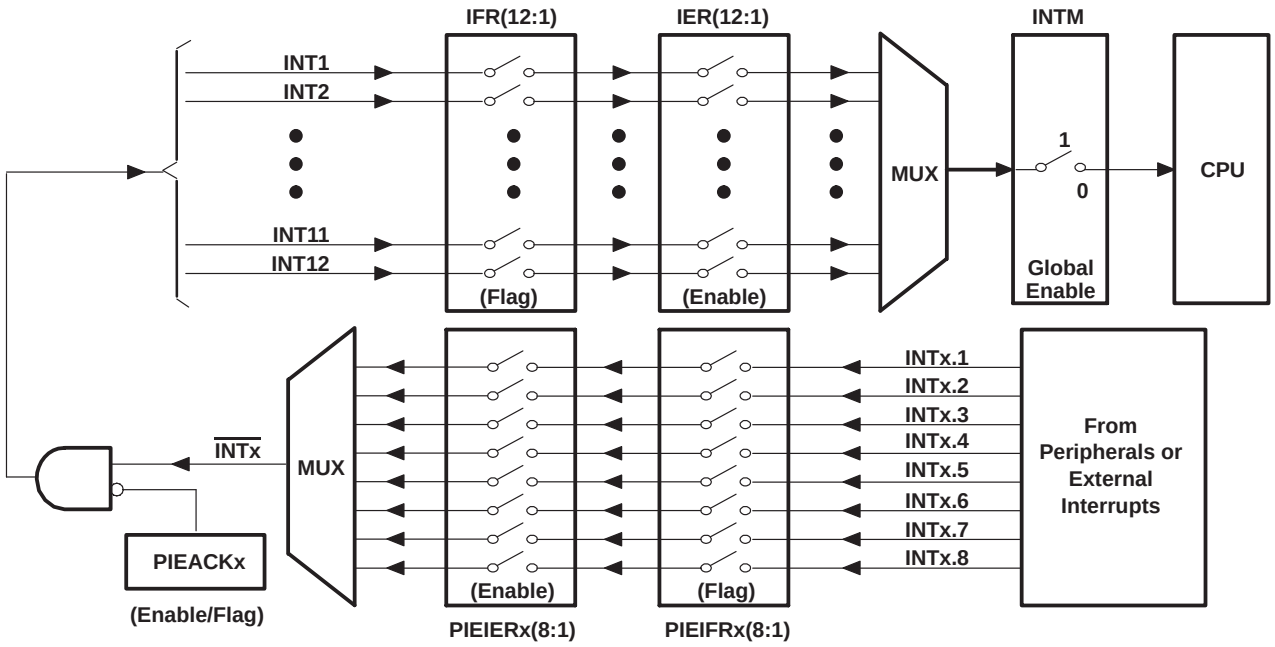

Figure 3−6. Multiplexing of Interrupts Using the PIE Block

Table 3−9. PIE Peripheral Interrupts†

CPU INTERRUPTS	PIE INTERRUPTS							
	INTx.8	INTx.7	INTx.6	INTx.5	INTx.4	INTx.3	INTx.2	INTx.1
INT1	$\overline{\text{WAKEINT}}$ (LPM/WD)	TINT0 (TIMER 0)	ADCINT (ADC)	XINT2	XINT1	reserved	PDPINTB (EV-B)	PDPINTA (EV-A)
INT2	reserved	T1OFINT (EV-A)	T1UFINT (EV-A)	T1CINT (EV-A)	T1PINT (EV-A)	CMP3INT (EV-A)	CMP2INT (EV-A)	CMP1INT (EV-A)
INT3	reserved	CAPINT3 (EV-A)	CAPINT2 (EV-A)	CAPINT1 (EV-A)	T2OFINT (EV-A)	T2UFINT (EV-A)	T2CINT (EV-A)	T2PINT (EV-A)
INT4	reserved	T3OFINT (EV-B)	T3UFINT (EV-B)	T3CINT (EV-B)	T3PINT (EV-B)	CMP6INT (EV-B)	CMP5INT (EV-B)	CMP4INT (EV-B)
INT5	reserved	CAPINT6 (EV-B)	CAPINT5 (EV-B)	CAPINT4 (EV-B)	T4OFINT (EV-B)	T4UFINT (EV-B)	T4CINT (EV-B)	T4PINT (EV-B)
INT6	reserved	reserved	MXINT (McBSP)	MRINT (McBSP)	reserved	reserved	SPITXINTA (SPI)	SPIRXINTA (SPI)
INT7	reserved	reserved	reserved	reserved	reserved	reserved	reserved	reserved
INT8	reserved	reserved	reserved	reserved	reserved	reserved	reserved	reserved
INT9	reserved	reserved	ECAN1INT (CAN)	ECAN0INT (CAN)	SCITXINTB (SCI-B)	SCIRXINTB (SCI-B)	SCITXINTA (SCI-A)	SCIRXINTA (SCI-A)
INT10	reserved	reserved	reserved	reserved	reserved	reserved	reserved	reserved
INT11	reserved	reserved	reserved	reserved	reserved	reserved	reserved	reserved
INT12	reserved	reserved	reserved	reserved	reserved	reserved	reserved	reserved

† Out of the 96 possible interrupts, 45 interrupts are currently used. The remaining interrupts are reserved for future devices. These interrupts can be used as software interrupts if they are enabled at the PIEIFRx level, provided none of the interrupts within the group is being used by a peripheral. Otherwise, interrupts coming in from peripherals may be lost by accidentally clearing their flag while modifying the PIEIFR.

To summarize, there are two safe cases when the reserved interrupts could be used as software interrupts:
1) No peripheral within the group is asserting interrupts.
2) No peripheral interrupts are assigned to the group (example PIE group 12).

Table 3−10. PIE Configuration and Control Registers

NAME	ADDRESS	Size (x16)	DESCRIPTION
PIECTRL	0x0000−0CE0	1	PIE, Control Register
PIEACK	0x0000−0CE1	1	PIE, Acknowledge Register
PIEIER1	0x0000−0CE2	1	PIE, INT1 Group Enable Register
PIEIFR1	0x0000−0CE3	1	PIE, INT1 Group Flag Register
PIEIER2	0x0000−0CE4	1	PIE, INT2 Group Enable Register
PIEIFR2	0x0000−0CE5	1	PIE, INT2 Group Flag Register
PIEIER3	0x0000−0CE6	1	PIE, INT3 Group Enable Register
PIEIFR3	0x0000−0CE7	1	PIE, INT3 Group Flag Register
PIEIER4	0x0000−0CE8	1	PIE, INT4 Group Enable Register
PIEIFR4	0x0000−0CE9	1	PIE, INT4 Group Flag Register
PIEIER5	0x0000−0CEA	1	PIE, INT5 Group Enable Register
PIEIFR5	0x0000−0CEB	1	PIE, INT5 Group Flag Register
PIEIER6	0x0000−0CEC	1	PIE, INT6 Group Enable Register
PIEIFR6	0x0000−0CED	1	PIE, INT6 Group Flag Register
PIEIER7	0x0000−0CEE	1	PIE, INT7 Group Enable Register
PIEIFR7	0x0000−0CEF	1	PIE, INT7 Group Flag Register
PIEIER8	0x0000−0CF0	1	PIE, INT8 Group Enable Register
PIEIFR8	0x0000−0CF1	1	PIE, INT8 Group Flag Register
PIEIER9	0x0000−0CF2	1	PIE, INT9 Group Enable Register
PIEIFR9	0x0000−0CF3	1	PIE, INT9 Group Flag Register
PIEIER10	0x0000−0CF4	1	PIE, INT10 Group Enable Register
PIEIFR10	0x0000−0CF5	1	PIE, INT10 Group Flag Register
PIEIER11	0x0000−0CF6	1	PIE, INT11 Group Enable Register
PIEIFR11	0x0000−0CF7	1	PIE, INT11 Group Flag Register
PIEIER12	0x0000−0CF8	1	PIE, INT12 Group Enable Register
PIEIFR12	0x0000−0CF9	1	PIE, INT12 Group Flag Register
Reserved	0x0000−0CFA 0x0000−0CFF	6	Reserved

Note: The PIE configuration and control registers are not protected by EALLOW mode. The PIE vector table is protected.

3.6.1 External Interrupts

Table 3−11. External Interrupt Registers

NAME	ADDRESS	SIZE (x16)	DESCRIPTION
XINT1CR	0x00 7070	1	XINT1 control register
XINT2CR	0x00 7071	1	XINT2 control register
reserved	0x00 7072 0x00 7076	5	
XNMICR	0x00 7077	1	XNMI control register
XINT1CTR	0x00 7078	1	XINT1 counter register
XINT2CTR	0x00 7079	1	XINT2 counter register
reserved	0x00 707A 0x00 707E	5	
XNMICTR	0x00 707F	1	XNMI counter register

Each external interrupt can be enabled/disabled or qualified using positive or negative going edge. For more information, see the *TMS320F28x System Control and Interrupts Reference Guide* (literature number SPRU078).

3.7 System Control

This section describes R281x oscillator, PLL and clocking mechanisms, the watchdog function and the low power modes. Figure 3−7 shows the various clock and reset domains in R281x devices that will be discussed.

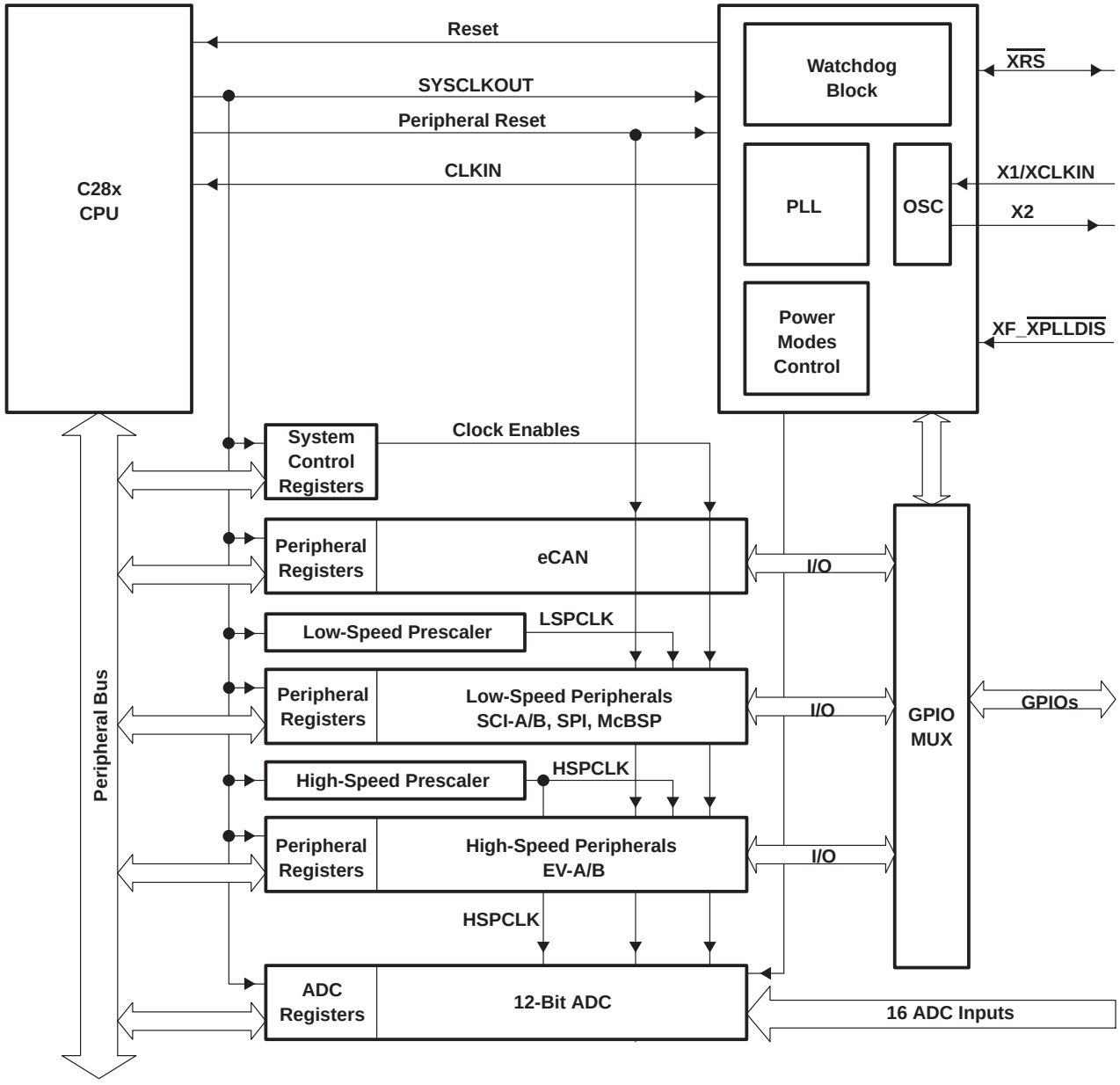

NOTE A: CLKIN is the clock input to the CPU. SYSCLKOUT is the output clock of the CPU. They are of the same frequency.

Figure 3−7. Clock and Reset Domains

The PLL, clocking, watchdog and low-power modes are controlled by the registers listed in Table 3−12.

Table 3−12. PLL, Clocking, Watchdog, and Low-Power Mode Registers†

NAME	ADDRESS	SIZE (x16)	DESCRIPTION
reserved	0x00 7010 0x00 7017	8	
reserved	0x00 7018	1	
reserved	0x00 7019	1	
HISPCP	0x00 701A	1	High-Speed Peripheral Clock Prescaler Register for HSPCLK clock
LOSPCP	0x00 701B	1	Low-Speed Peripheral Clock Prescaler Register for LSPCLK clock
PCLKCR	0x00 701C	1	Peripheral Clock Control Register
reserved	0x00 701D	1	
LPMCR0	0x00 701E	1	Low Power Mode Control Register 0
LPMCR1	0x00 701F	1	Low Power Mode Control Register 1
reserved	0x00 7020	1	
PLLCR	0x00 7021	1	PLL Control Register‡
SCSR	0x00 7022	1	System Control & Status Register
WDCNTR	0x00 7023	1	Watchdog Counter Register
reserved	0x00 7024	1	
WDKEY	0x00 7025	1	Watchdog Reset Key Register
reserved	0x00 7026 0x00 7028	3	
WDCR	0x00 7029	1	Watchdog Control Register
reserved	0x00 702A 0x00 702F	6	

† All of the above registers can only be accessed, by executing the EALLOW instruction.
‡ The PLL control register (PLLCR) is reset to a known state by the $\overline{\text{XRS}}$ signal only. Emulation reset (through Code Composer Studio) will not reset PLLCR.

3.7.1 OSC and PLL Block

Figure 3−8 shows the OSC and PLL block on R281x.

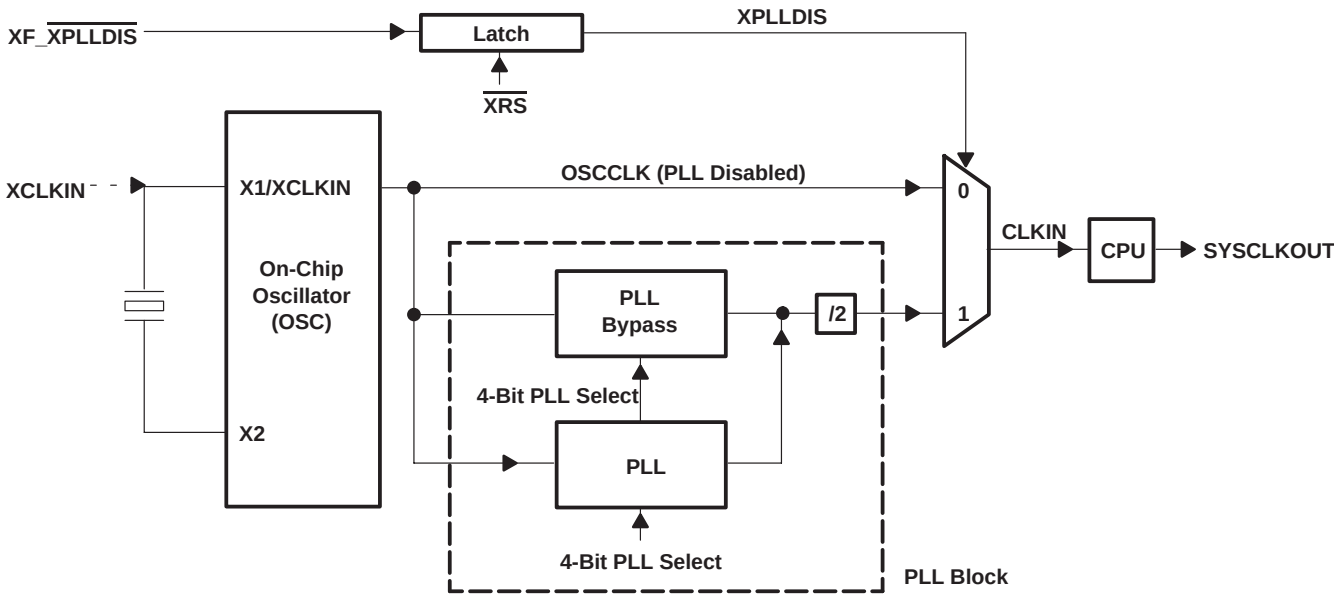

Figure 3−8. OSC and PLL Block

The on-chip oscillator circuit enables a crystal to be attached to R281x devices using the X1/XCLKIN and X2 pins. If a crystal is not used, then an external oscillator can be directly connected to the X1/XCLKIN pin and the X2 pin is left unconnected. The logic-high level in this case should not exceed V_{DD}. The PLLCR bits [3:0] set the clocking ratio.

Table 3−13. PLLCR Register Bit Definitions

BIT(S)	NAME	TYPE	$\overline{\text{XRS}}$ RESET†	DESCRIPTION
15:4	reserved	R = 0	0:0	
3:0	DIV	R/W	0,0,0,0	SYSCLKOUT = (XCLKIN * n)/2, where n is the PLL multiplication factor. **Bit Value** **n** **SYSCLKOUT** 0000 PLL Bypassed XCLKIN/2 0001 1 XCLKIN/2 0010 2 XCLKIN 0011 3 XCLKIN * 1.5 0100 4 XCLKIN * 2 0101 5 XCLKIN * 2.5 0110 6 XCLKIN * 3 0111 7 XCLKIN * 3.5 1000 8 XCLKIN * 4 1001 9 XCLKIN * 4.5 1010 10 XCLKIN * 5 1011 11 Reserved 1100 12 Reserved 1101 13 Reserved 1110 14 Reserved 1111 15 Reserved

† The PLLCR register is reset to a known state by the $\overline{\text{XRS}}$ reset line. **If a reset is issued by the debugger, the PLL clocking ratio is not changed.**

3.7.2 Loss of Input Clock

In PLL enabled mode, if the input clock XCLKIN or the oscillator clock is removed or absent, the PLL will still issue a “limp-mode” clock. The limp-mode clock will continue to clock the CPU and peripherals at a typical frequency of 1−4 MHz. The PLLCR register should have been written to with a non-zero value for this feature to work.

Normally, when the input clocks are present, the watchdog counter will decrement to initiate a watchdog reset or WDINT interrupt. However, when the external input clock fails, the watchdog counter will stop decrementing (i.e., the watchdog counter does not change with the limp-mode clock). This condition could be used by the application firmware to detect the input clock failure and initiate necessary shut-down procedure for the system.

3.7.3 PLL-Based Clock Module

R281x has an on-chip, PLL-based clock module. This module provides all the necessary clocking signals for the device, as well as control for low-power mode entry. The PLL has a 4-bit ratio control to select different CPU clock rates. The watchdog module should be disabled before writing to the PLLCR register. It can be re-enabled (if need be) after the PLL module has stabilized, which takes 131072 XCLKIN cycles.

The PLL-based clock module provides two modes of operation:

- Crystal-operation
  This mode allows the use of an external crystal/resonator to provide the time base to the device.
- External clock source operation
  This mode allows the internal oscillator to be bypassed. The device clocks are generated from an external clock source input on the X1/XCLKIN pin.

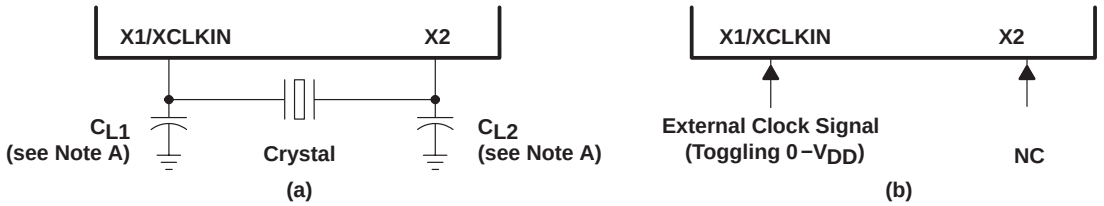

NOTE A: TI recommends that customers have the resonator/crystal vendor characterize the operation of their device with the DSP chip. The resonator/crystal vendor has the equipment and expertise to tune the tank circuit. The vendor can also advise the customer regarding the proper tank component values that will ensure start-up and stability over the entire operating range.

Figure 3−9. Recommended Crystal/Clock Connection

Table 3−14. Possible PLL Configuration Modes

PLL MODE	REMARKS	SYSCLKOUT
PLL Disabled	Invoked by tying $\overline{\text{XPLLDIS}}$ pin low upon reset. PLL block is completely disabled. Clock input to the CPU (CLKIN) is directly derived from the clock signal present at the X1/XCLKIN pin.	XCLKIN
PLL Bypassed	Default PLL configuration upon power-up, if PLL is not disabled. The PLL itself is bypassed. However, the /2 module in the PLL block divides the clock input at the X1/XCLKIN pin by two before feeding it to the CPU.	XCLKIN/2
PLL Enabled	Achieved by writing a non-zero value “n” into PLLCR register. The /2 module in the PLL block now divides the output of the PLL by two before feeding it to the CPU.	(XCLKIN * n) / 2

3.7.4 External Reference Oscillator Clock Option

The typical specifications for the external quartz crystal for a frequency of 30 MHz are listed below:

- Fundamental mode, parallel resonant
- C_L (load capacitance) = 12 pF
- $C_{L1} = C_{L2} = 24$ pF
- $C_{shunt} = 6$ pF
- ESR range = 25 to 40 Ω

3.7.5 Watchdog Block

The watchdog block on R281x is identical to the one used on the 240x devices. The watchdog module generates an output pulse, 512 oscillator clocks wide (OSCCLK), whenever the 8-bit watchdog up counter has reached its maximum value. To prevent this, the user disables the counter or the software must periodically write a 0x55 + 0xAA sequence into the watchdog key register which will reset the watchdog counter. Figure 3−10 shows the various functional blocks within the watchdog module.

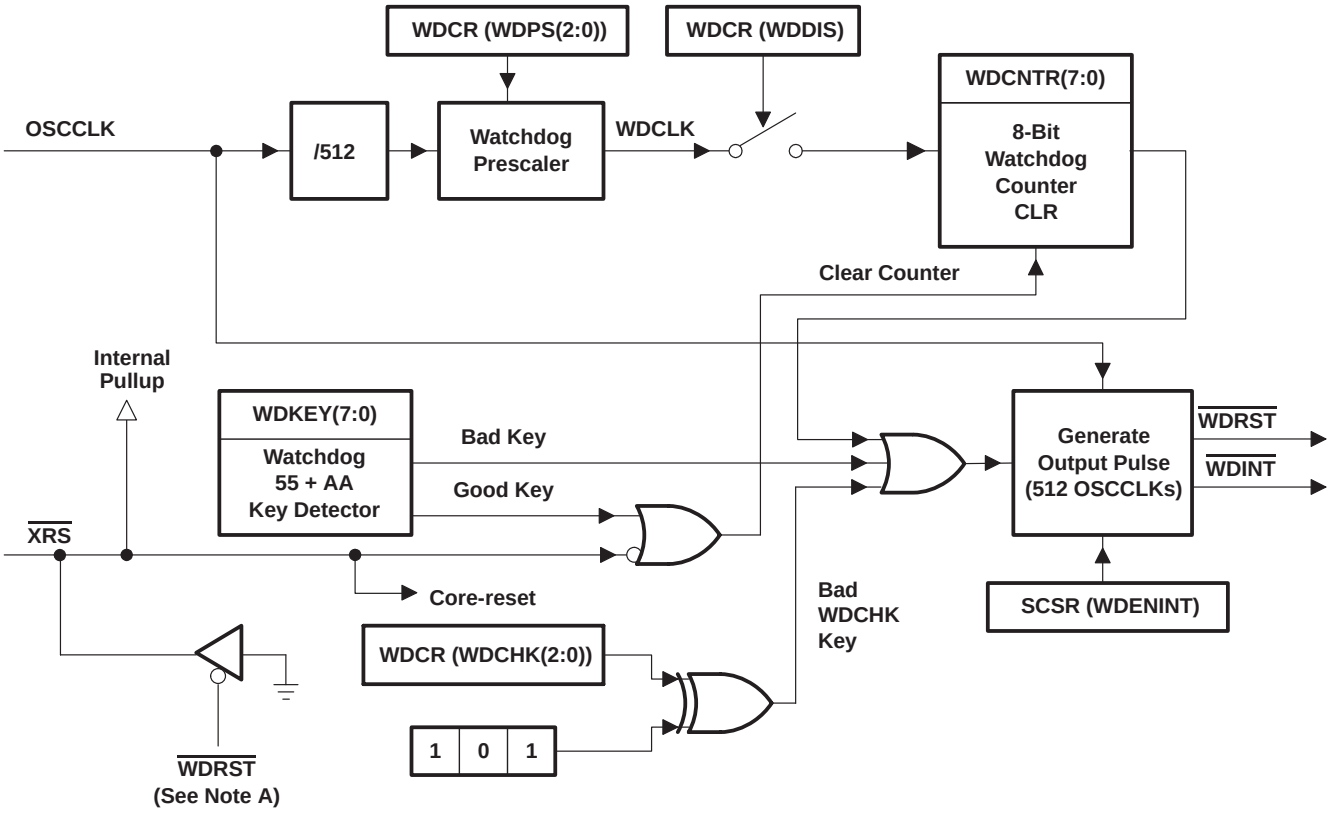

NOTE A: The $\overline{\text{WDRST}}$ signal is driven low for 512 OSCCLK cycles.

Figure 3−10. Watchdog Module

The $\overline{\text{WDINT}}$ signal enables the watchdog to be used as a wakeup from IDLE/STANDBY mode timer.

In STANDBY mode, all peripherals are turned off on the device. The only peripheral that remains functional is the watchdog. The Watchdog module will run off the PLL clock or the oscillator clock. The $\overline{\text{WDINT}}$ signal is fed to the LPM block so that it can wake the device from STANDBY (if enabled). See Section 3.7.6, Low-Power Modes Block, for more details.

In IDLE mode, the $\overline{\text{WDINT}}$ signal can generate an interrupt to the CPU, via the PIE, to take the CPU out of IDLE mode.

In HALT mode, this feature cannot be used because the oscillator (and PLL) are turned off and hence so is the WATCHDOG.

3.7.6 Low-Power Modes Block

The low-power modes on R281x are similar to the 240x devices. Table 3−15 summarizes the various modes.

Table 3−15. R281x Low-Power Modes

MODE	LPM(1:0)	OSCCLK	CLKIN	SYSCLKOUT	EXIT†
Normal	X,X	on	on	on	–
IDLE	0,0	on	on	on‡	$\overline{\text{XRS}}$, $\overline{\text{WDINT}}$, Any Enabled Interrupt, XNMI Debugger§
STANDBY	0,1	on (watchdog still running)	off	off	$\overline{\text{XRS}}$, $\overline{\text{WDINT}}$, XINT1, XNMI, $\overline{\text{T1/2/3/4CTRIP}}$, $\overline{\text{C1/2/3/4/5/6TRIP}}$, SCIRXDA, SCIRXDB, CANRX, Debugger§
HALT	1,X	off (oscillator and PLL turned off, watchdog not functional)	off	off	$\overline{\text{XRS}}$, XNMI, Debugger§

† The Exit column lists which signals or under what conditions the low power mode will be exited. A low signal, on any of the signals, will exit the low power condition. This signal must be kept low long enough for an interrupt to be recognized by the device. Otherwise the IDLE mode will not be exited and the device will go back into the indicated low power mode.

‡ The IDLE mode on the C28x behaves differently than on the 24x/240x. On the C28x, the clock output from the core (SYSCLKOUT) is still functional while on the 24x/240x the clock is turned off.

§ On the C28x, the JTAG port can still function even if the core clock (CLKIN) is turned off.

The various low-power modes operate as follows:

IDLE Mode: This mode is exited by any enabled interrupt or an XNMI that is recognized by the processor. The LPM block performs no tasks during this mode as long as the LPMCR0(LPM) bits are set to 0,0.

STANDBY Mode: All other signals (including XNMI) will wake the device from STANDBY mode if selected by the LPMCR1 register. The user will need to select which signal(s) will wake the device. The selected signal(s) are also qualified by the OSCCLK before waking the device. The number of OSCCLKs is specified in the LPMCR0 register.

HALT Mode: Only the $\overline{\text{XRS}}$ and XNMI external signals can wake the device from HALT mode. The XNMI input to the core has an enable/disable bit. Hence, it is safe to use the XNMI signal for this function.

NOTE: The low-power modes do not affect the state of the output pins (PWM pins included). They will be in whatever state the code left them when the IDLE instruction was executed.

4 Peripherals

The integrated peripherals of R281x are described in the following subsections:

- Three 32-bit CPU-Timers
- Two event-manager modules (EVA, EVB)
- Enhanced analog-to-digital converter (ADC) module
- Enhanced controller area network (eCAN) module
- Multichannel buffered serial port (McBSP) module
- Serial communications interface modules (SCI-A, SCI-B)
- Serial peripheral interface (SPI) module
- Digital I/O and shared pin functions

4.1 32-Bit CPU-Timers 0/1/2

There are three 32-bit CPU-timers on R281x devices (CPU-TIMER0/1/2).

CPU-Timer 1 is reserved for TI system functions and Timer 2 is reserved for DSP/BIOS. CPU-Timer 0 can be used in user applications. These timers are different from the general-purpose (GP) timers that are present in the Event Manager modules (EVA, EVB).

NOTE: If the application is not using DSP/BIOS, then CPU-Timers 1 and 2 can be used in the application.

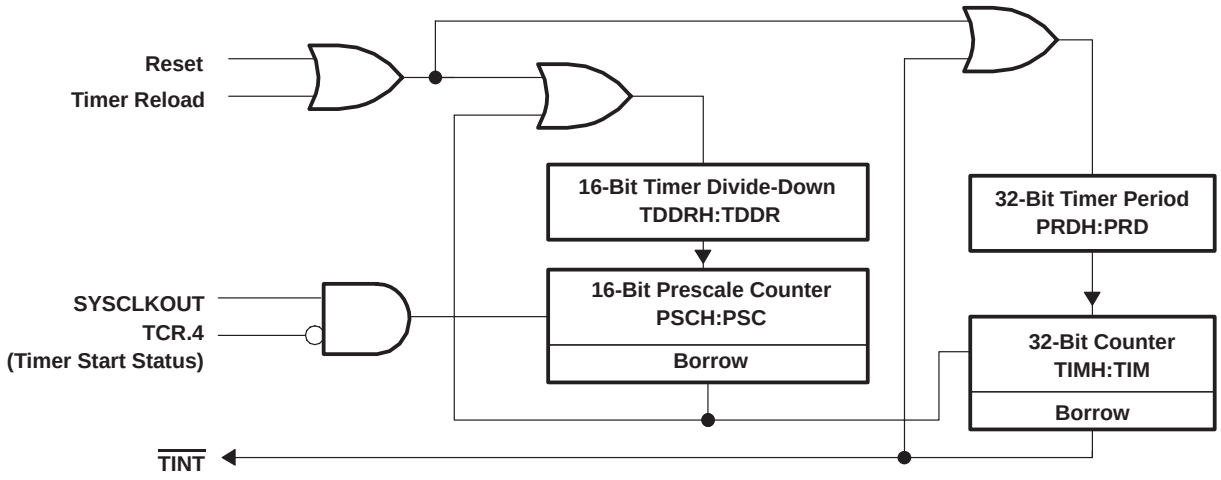

Figure 4−1. CPU-Timers

In R281x devices, the timer interrupt signals ($\overline{\text{TINT0}}$, $\overline{\text{TINT1}}$, $\overline{\text{TINT2}}$) are connected as shown in Figure 4−2.

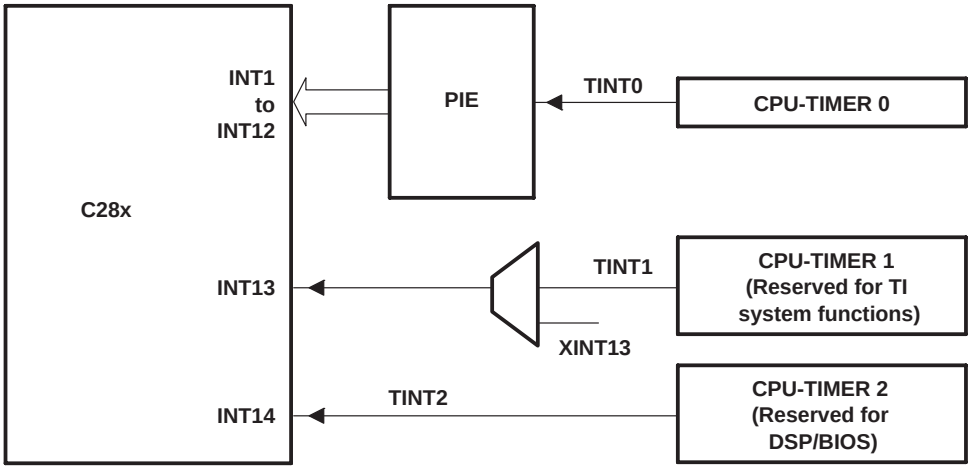

NOTES: A. The timer registers are connected to the Memory Bus of the C28x processor.
B. The timing of the timers is synchronized to SYSCLKOUT of the processor clock.

Figure 4−2. CPU-Timer Interrupts Signals and Output Signal (See Notes A and B)

The general operation of the timer is as follows: The 32-bit counter register “TIMH:TIM” is loaded with the value in the period register “PRDH:PRD”. The counter register, decrements at the SYSCLKOUT rate of the C28x. When the counter reaches 0, a timer interrupt output signal generates an interrupt pulse. The registers listed in Table 4−1 are used to configure the timers. For more information, see the *TMS320F28x System Control and Interrupts Reference Guide* (literature number SPRU078).

Table 4−1. CPU-Timers 0, 1, 2 Configuration and Control Registers

NAME	ADDRESS	SIZE (x16)	DESCRIPTION
TIMER0TIM	0x00 0C00	1	CPU-Timer 0, Counter Register
TIMER0TIMH	0x00 0C01	1	CPU-Timer 0, Counter Register High
TIMER0PRD	0x00 0C02	1	CPU-Timer 0, Period Register
TIMER0PRDH	0x00 0C03	1	CPU-Timer 0, Period Register High
TIMER0TCR	0x00 0C04	1	CPU-Timer 0, Control Register
reserved	0x00 0C05	1	
TIMER0TPR	0x00 0C06	1	CPU-Timer 0, Prescale Register
TIMER0TPRH	0x00 0C07	1	CPU-Timer 0, Prescale Register High
TIMER1TIM	0x00 0C08	1	CPU-Timer 1, Counter Register
TIMER1TIMH	0x00 0C09	1	CPU-Timer 1, Counter Register High
TIMER1PRD	0x00 0C0A	1	CPU-Timer 1, Period Register
TIMER1PRDH	0x00 0C0B	1	CPU-Timer 1, Period Register High
TIMER1TCR	0x00 0C0C	1	CPU-Timer 1, Control Register
reserved	0x00 0C0D	1	
TIMER1TPR	0x00 0C0E	1	CPU-Timer 1, Prescale Register
TIMER1TPRH	0x00 0C0F	1	CPU-Timer 1, Prescale Register High
TIMER2TIM	0x00 0C10	1	CPU-Timer 2, Counter Register
TIMER2TIMH	0x00 0C11	1	CPU-Timer 2, Counter Register High
TIMER2PRD	0x00 0C12	1	CPU-Timer 2, Period Register
TIMER2PRDH	0x00 0C13	1	CPU-Timer 2, Period Register High
TIMER2TCR	0x00 0C14	1	CPU-Timer 2, Control Register
reserved	0x00 0C15	1	
TIMER2TPR	0x00 0C16	1	CPU-Timer 2, Prescale Register
TIMER2TPRH	0x00 0C17	1	CPU-Timer 2, Prescale Register High
reserved	0x00 0C18 0x00 0C3F	40	

4.2 Event Manager Modules (EVA, EVB)

The event-manager modules include general-purpose (GP) timers, full-compare/PWM units, capture units, and quadrature-encoder pulse (QEP) circuits. EVA and EVB timers, compare units, and capture units function identically. However, timer/unit names differ for EVA and EVB. Table 4−2 shows the module and signal names used. Table 4−2 shows the features and functionality available for the event-manager modules and highlights EVA nomenclature.

Event managers A and B have identical peripheral register sets with EVA starting at 7400h and EVB starting at 7500h. The paragraphs in this section describe the function of GP timers, compare units, capture units, and QEPs using EVA nomenclature. These paragraphs are applicable to EVB with regard to function—however, module/signal names would differ. Table 4−3 lists the EVA registers. For more information, see the *TMS320F28x DSP Event Manager (EV) Reference Guide* (literature number SPRU065).

Table 4−2. Module and Signal Names for EVA and EVB

EVENT MANAGER MODULES	EVA		EVB	
	MODULE	SIGNAL	MODULE	SIGNAL
GP Timers	GP Timer 1 GP Timer 2	T1PWM/T1CMP T2PWM/T2CMP	GP Timer 3 GP Timer 4	T3PWM/T3CMP T4PWM/T4CMP
Compare Units	Compare 1 Compare 2 Compare 3	PWM1/2 PWM3/4 PWM5/6	Compare 4 Compare 5 Compare 6	PWM7/8 PWM9/10 PWM11/12
Capture Units	Capture 1 Capture 2 Capture 3	CAP1 CAP2 CAP3	Capture 4 Capture 5 Capture 6	CAP4 CAP5 CAP6
QEP Channels	QEP1 QEP2 QEPI1	QEP1 QEP2	QEP3 QEP4 QEPI2	QEP3 QEP4
External Clock Inputs	Direction External Clock	TDIRA TCLKINA	Direction External Clock	TDIRB TCLKINB
External Trip Inputs	Compare	$\overline{\text{C1TRIP}}$ $\overline{\text{C2TRIP}}$ C3TRIP	Compare	$\overline{\text{C4TRIP}}$ $\overline{\text{C5TRIP}}$ C6TRIP
External Trip Inputs		$\overline{\text{T1CTRIP_PDPINTA}}$† $\overline{\text{T2CTRIP/EVASOC}}$		$\overline{\text{T3CTRIP_PDPINTB}}$† $\overline{\text{T4CTRIP/EVBSOC}}$

† In the 24x/240x-compatible mode, the $\overline{\text{T1CTRIP_PDPINTA}}$ pin functions as $\overline{\text{PDPINTA}}$ and the $\overline{\text{T3CTRIP_PDPINTB}}$ pin functions as $\overline{\text{PDPINTB}}$.

Table 4−3. EVA Registers†

NAME	ADDRESS	SIZE (x16)	DESCRIPTION
GPTCONA	0x00 7400	1	GP Timer Control Register A
T1CNT	0x00 7401	1	GP Timer 1 Counter Register
T1CMPR	0x00 7402	1	GP Timer 1 Compare Register
T1PR	0x00 7403	1	GP Timer 1 Period Register
T1CON	0x00 7404	1	GP Timer 1 Control Register
T2CNT	0x00 7405	1	GP Timer 2 Counter Register
T2CMPR	0x00 7406	1	GP Timer 2 Compare Register
T2PR	0x00 7407	1	GP Timer 2 Period Register
T2CON	0x00 7408	1	GP Timer 2 Control Register
EXTCONA‡	0x00 7409	1	GP Extension Control Register A
COMCONA	0x00 7411	1	Compare Control Register A
ACTRA	0x00 7413	1	Compare Action Control Register A
DBTCONA	0x00 7415	1	Dead-Band Timer Control Register A
CMPR1	0x00 7417	1	Compare Register 1
CMPR2	0x00 7418	1	Compare Register 2
CMPR3	0x00 7419	1	Compare Register 3
CAPCONA	0x00 7420	1	Capture Control Register A
CAPFIFOA	0x00 7422	1	Capture FIFO Status Register A
CAP1FIFO	0x00 7423	1	Two-Level Deep Capture FIFO Stack 1
CAP2FIFO	0x00 7424	1	Two-Level Deep Capture FIFO Stack 2
CAP3FIFO	0x00 7425	1	Two-Level Deep Capture FIFO Stack 3
CAP1FBOT	0x00 7427	1	Bottom Register Of Capture FIFO Stack 1
CAP2FBOT	0x00 7428	1	Bottom Register Of Capture FIFO Stack 2
CAP3FBOT	0x00 7429	1	Bottom Register Of Capture FIFO Stack 3
EVAIMRA	0x00 742C	1	Interrupt Mask Register A
EVAIMRB	0x00 742D	1	Interrupt Mask Register B
EVAIMRC	0x00 742E	1	Interrupt Mask Register C
EVAIFRA	0x00 742F	1	Interrupt Flag Register A
EVAIFRB	0x00 7430	1	Interrupt Flag Register B
EVAIFRC	0x00 7431	1	Interrupt Flag Register C

† The EV-B register set is identical except the address range is from 0x00−7500 to 0x00−753F. The above registers are mapped to Zone 2. This space allows only 16-bit accesses. 32-bit accesses produce undefined results.
‡ New register compared to 24x/240x

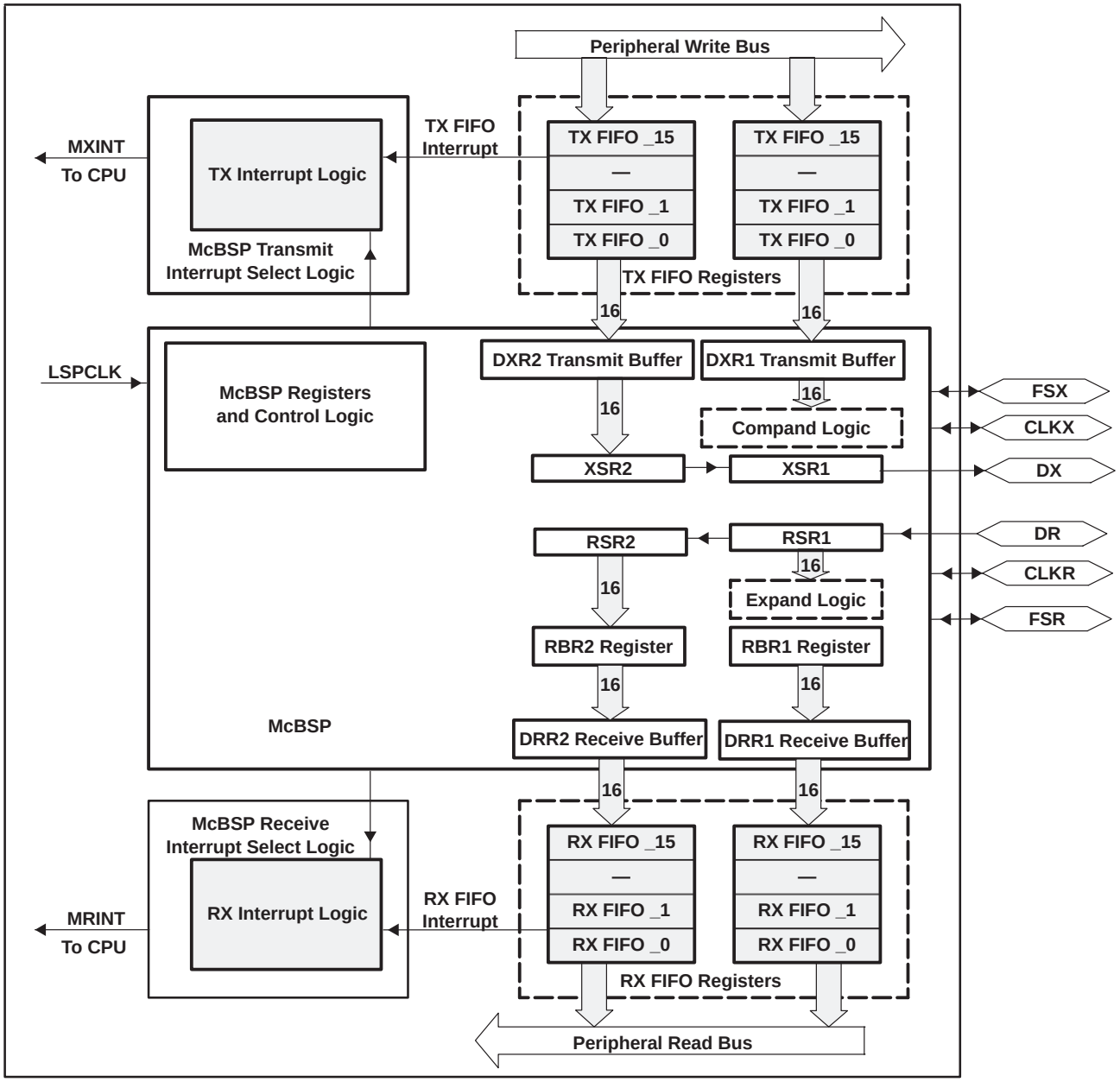

Figure 4−3. Event Manager A Functional Block Diagram (See Note A)

4.2.1 General-Purpose (GP) Timers

There are two GP timers. The GP timer x (x = 1 or 2 for EVA; x = 3 or 4 for EVB) includes:

- A 16-bit timer, up-/down-counter, TxCNT, for reads or writes
- A 16-bit timer-compare register, TxCMPR (double-buffered with shadow register), for reads or writes
- A 16-bit timer-period register, TxPR (double-buffered with shadow register), for reads or writes
- A 16-bit timer-control register,TxCON, for reads or writes
- Selectable internal or external input clocks

- A programmable prescaler for internal or external clock inputs
- Control and interrupt logic, for four maskable interrupts: *underflow*, *overflow*, *timer compare*, and *period interrupts*
- A selectable direction input pin (TDIRx) (to count up or down when directional up-/down-count mode is selected)

The GP timers can be operated independently or synchronized with each other. The compare register associated with each GP timer can be used for compare function and PWM-waveform generation. There are three continuous modes of operations for each GP timer in up- or up/down-counting operations. Internal or external input clocks with programmable prescaler are used for each GP timer. GP timers also provide the time base for the other event-manager submodules: GP timer 1 for all the compares and PWM circuits, GP timer 2/1 for the capture units and the quadrature-pulse counting operations. Double-buffering of the period and compare registers allows programmable change of the timer (PWM) period and the compare/PWM pulse width as needed.

4.2.2 Full-Compare Units

There are three full-compare units on each event manager. These compare units use GP timer1 as the time base and generate six outputs for compare and PWM-waveform generation using programmable deadband circuit. The state of each of the six outputs is configured independently. The compare registers of the compare units are double-buffered, allowing programmable change of the compare/PWM pulse widths as needed.

4.2.3 Programmable Deadband Generator

Deadband generation can be enabled/disabled for each compare unit output individually. The deadband-generator circuit produces two outputs (with or without deadband zone) for each compare unit output signal. The output states of the deadband generator are configurable and changeable as needed by way of the double-buffered ACTRx register.

4.2.4 PWM Waveform Generation

Up to eight PWM waveforms (outputs) can be generated simultaneously by each event manager: three independent pairs (six outputs) by the three full-compare units with *programmable deadbands*, and two independent PWMs by the GP-timer compares.

4.2.5 Double Update PWM Mode

The R281x Event Manager supports “Double Update PWM Mode.” This mode refers to a PWM operation mode in which the position of the leading edge and the position of the trailing edge of a PWM pulse are independently modifiable in each PWM period. To support this mode, the compare register that determines the position of the edges of a PWM pulse must allow (buffered) compare value update once at the beginning of a PWM period and another time in the middle of a PWM period. The compare registers in R281x Event Managers are all buffered and support three compare value reload/update (value in buffer becoming active) modes. These modes have earlier been documented as compare value reload conditions. The reload condition that supports double update PWM mode is reloaded on Underflow (beginning of PWM period) OR Period (middle of PWM period). Double update PWM mode can be achieved by using this condition for compare value reload.

4.2.6 PWM Characteristics

Characteristics of the PWMs are as follows:

- 16-bit registers
- Wide range of programmable deadband for the PWM output pairs
- Change of the PWM carrier frequency for PWM frequency wobbling as needed

- Change of the PWM pulse widths within and after each PWM period as needed
- External-maskable power and drive-protection interrupts
- Pulse-pattern-generator circuit, for programmable generation of asymmetric, symmetric, and four-space vector PWM waveforms
- Minimized CPU overhead using auto-reload of the compare and period registers
- The PWM pins are driven to a high-impedance state when the $\overline{\text{PDPINTx}}$ pin is driven low and **after** $\overline{\text{PDPINTx}}$ signal qualification. The $\overline{\text{PDPINTx}}$ pin (after qualification) is reflected in bit 8 of the COMCONx register.
  - $\overline{\text{PDPINTA}}$ pin status is reflected in bit 8 of COMCONA register.
  - $\overline{\text{PDPINTB}}$ pin status is reflected in bit 8 of COMCONB register.
- EXTCON register bits provide options to individually trip control for each PWM pair of signals

4.2.7 Capture Unit

The capture unit provides a logging function for different events or transitions. The values of the selected GP timer counter is captured and stored in the two-level-deep FIFO stacks when selected transitions are detected on capture input pins, CAPx (x = 1, 2, or 3 for EVA; and x = 4, 5, or 6 for EVB). The capture unit consists of three capture circuits.

- Capture units include the following features:
  - One 16-bit capture control register, CAPCONx (R/W)
  - One 16-bit capture FIFO status register, CAPFIFOx
  - Selection of GP timer 1/2 (for EVA) or 3/4 (for EVB) as the time base
  - Three 16-bit 2-level-deep FIFO stacks, one for each capture unit
  - Three capture input pins (CAP1/2/3 for EVA, CAP4/5/6 for EVB)—one input pin per capture unit. [All inputs are synchronized with the device (CPU) clock. In order for a transition to be captured, the input must hold at its current level to meet the input qualification circuitry requirements. The input pins CAP1/2 and CAP4/5 can also be used as QEP inputs to the QEP circuit.]
  - User-specified transition (rising edge, falling edge, or both edges) detection
  - Three maskable interrupt flags, one for each capture unit
  - The capture pins can also be used as general-purpose interrupt pins, if they are not used for the capture function.

4.2.8 Quadrature-Encoder Pulse (QEP) Circuit

Two capture inputs (CAP1 and CAP2 for EVA; CAP4 and CAP5 for EVB) can be used to interface the on-chip QEP circuit with a quadrature encoder pulse. Full synchronization of these inputs is performed on-chip. Direction or leading-quadrature pulse sequence is detected, and GP timer 2/4 is incremented or decremented by the rising and falling edges of the two input signals (four times the frequency of either input pulse).

With EXTCONA register bits, the EVA QEP circuit can use CAP3 as a capture index pin as well. Similarly, with EXTCONB register bits, the EVB QEP circuit can use CAP6 as a capture index pin.

4.2.9 External ADC Start-of-Conversion

EVA/EVB start-of-conversion (SOC) can be sent to an external pin ($\overline{\text{EVASOC}}$/$\overline{\text{EVBSOC}}$) for external ADC interface. $\overline{\text{EVASOC}}$ and $\overline{\text{EVBSOC}}$ are MUXed with $\overline{\text{T2CTRIP}}$ and $\overline{\text{T4CTRIP}}$, respectively.

4.3 Enhanced Analog-to-Digital Converter (ADC) Module

A simplified functional block diagram of the ADC module is shown in Figure 4−4. The ADC module consists of a 12-bit ADC with a built-in sample-and-hold (S/H) circuit. Functions of the ADC module include:

- 12-bit ADC core with built-in S/H
- Analog input: 0.0 V to 3.0 V (Voltages above 3.0 V produce full-scale conversion results.)
- Fast conversion rate: 80 ns at 25-MHz ADC clock, 12.5 MSPS
- 16-channel, MUXed inputs
- Autosequencing capability provides up to 16 “autoconversions” in a single session. Each conversion can be programmed to select any 1 of 16 input channels
- Sequencer can be operated as two independent 8-state sequencers or as one large 16-state sequencer (i.e., two cascaded 8-state sequencers)
- Sixteen result registers (individually addressable) to store conversion values
  - The digital value of the input analog voltage is derived by:

$$\text{Digital Value} = 0, \quad \text{when input} \le 0\ \text{V}$$

$$\text{Digital Value} = 4096 \times \frac{\text{Input Analog Voltage} - \text{ADCLO}}{3}, \quad \text{when } 0\ \text{V} < \text{input} < 3\ \text{V}$$

$$\text{Digital Value} = 4095, \quad \text{when input} \ge 3\ \text{V}$$

- Multiple triggers as sources for the start-of-conversion (SOC) sequence
  - S/W − software immediate start
  - EVA − Event manager A (multiple event sources within EVA)
  - EVB − Event manager B (multiple event sources within EVB)
- Flexible interrupt control allows interrupt request on every end-of-sequence (EOS) or every other EOS
- Sequencer can operate in “start/stop” mode, allowing multiple “time-sequenced triggers” to synchronize conversions
- EVA and EVB triggers can operate independently in dual-sequencer mode
- Sample-and-hold (S/H) acquisition time window has separate prescale control

The ADC module in R281x has been enhanced to provide flexible interface to event managers A and B. The ADC interface is built around a fast, 12-bit ADC module with a fast conversion rate of 80 ns at 25-MHz ADC clock. The ADC module has 16 channels, configurable as two independent 8-channel modules to service event managers A and B. The two independent 8-channel modules can be cascaded to form a 16-channel module. Although there are multiple input channels and two sequencers, there is only one converter in the ADC module. Figure 4−4 shows the block diagram of the R281x ADC module.

The two 8-channel modules have the capability to autosequence a series of conversions, each module has the choice of selecting any one of the respective eight channels available through an analog MUX. In the cascaded mode, the autosequencer functions as a single 16-channel sequencer. On each sequencer, once the conversion is complete, the selected channel value is stored in its respective RESULT register. Autosequencing allows the system to convert the same channel multiple times, allowing the user to perform oversampling algorithms. This gives increased resolution over traditional single-sampled conversion results.

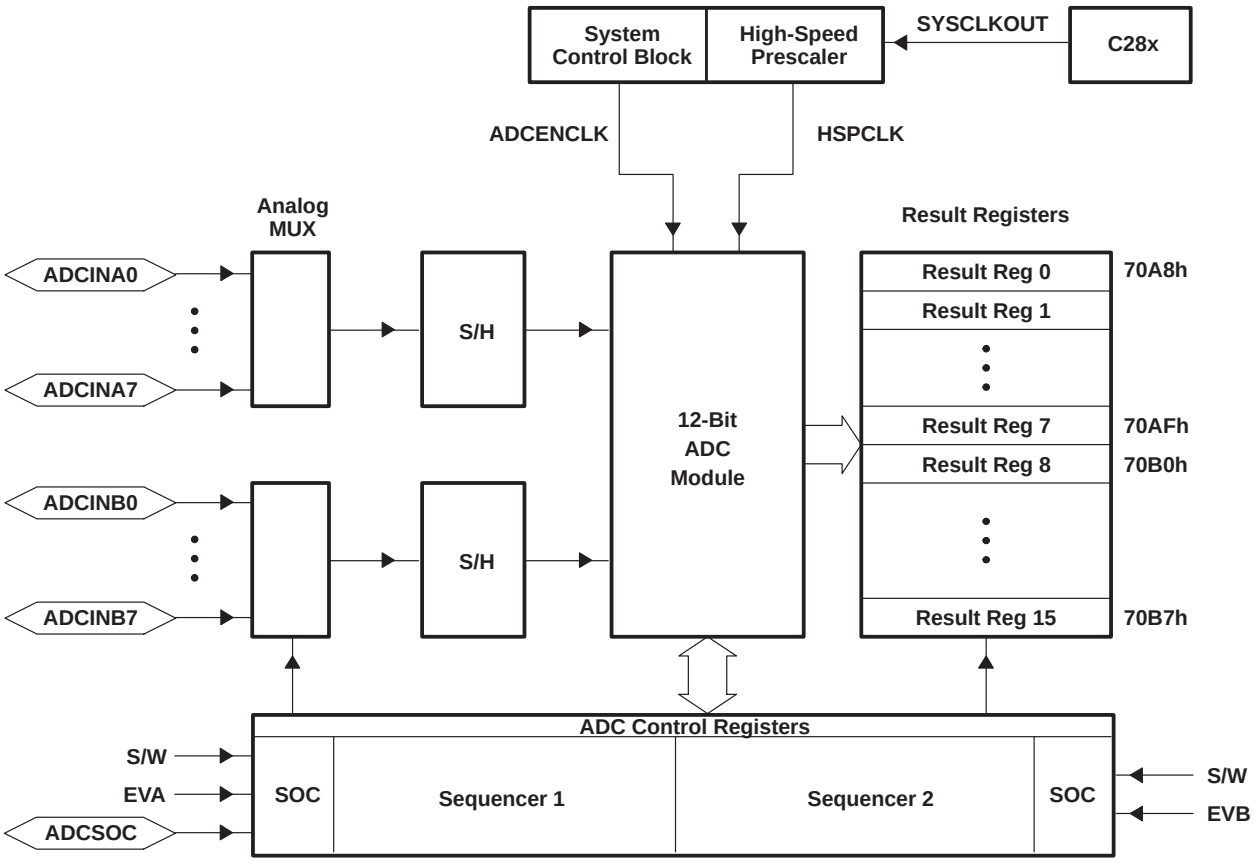

Figure 4−4. Block Diagram of the R281x ADC Module

To obtain the specified accuracy of the ADC, proper board layout is very critical. To the best extent possible, traces leading to the ADCIN pins should not run in close proximity to the digital signal paths. This is to minimize switching noise on the digital lines from getting coupled to the ADC inputs. Furthermore, proper isolation techniques must be used to isolate the ADC module power pins (V_{DDA1}/V_{DDA2}, $AV_{DDREFBG}$) from the digital supply. Figure 4−5 shows the ADC pin connections for R281x devices.

Notes:

1. The ADC registers are accessed at the SYSCLKOUT rate. The internal timing of the ADC module is controlled by the high-speed peripheral clock (HSPCLK).
2. The behavior of the ADC module based on the state of the ADCENCLK and HALT signals is as follows:

   ADCENCLK: On reset, this signal will be low. While reset is active-low ($\overline{XRS}$) the clock to the register will still function. This is necessary to make sure all registers and modes go into their default reset state. The analog module will however be in a low-power inactive state. As soon as reset goes high, then the clock to the registers will be disabled. When the user sets the ADCENCLK signal high, then the clocks to the registers will be enabled and the analog module will be enabled. There will be a certain time delay (ms range) before the ADC is stable and can be used.

   HALT: This signal only affects the analog module. It does not affect the registers. If low, the ADC module is powered. If high, the ADC module goes into low-power mode. The HALT mode will stop the clock to the CPU, which will stop the HSPCLK. Therefore the ADC register logic will be turned off indirectly.

Figure 4−5 shows the ADC pin-biasing for internal reference and Figure 4−6 shows the ADC pin-biasing for external reference.

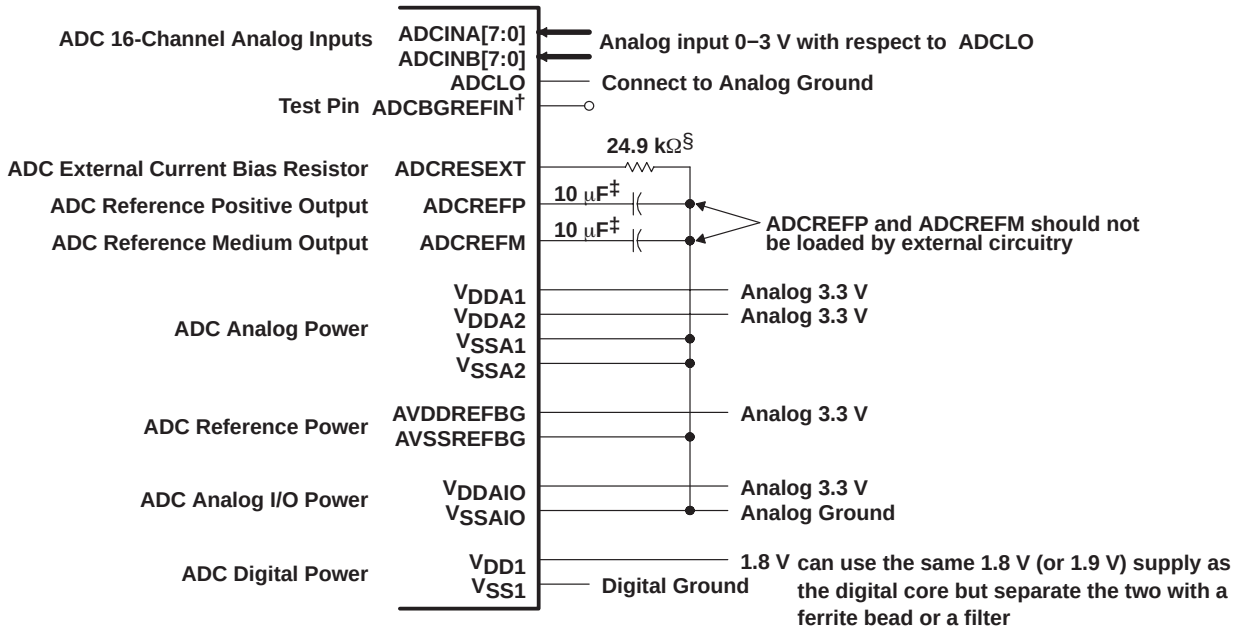

† Provide access to this pin in PCB layouts. Intended for test purposes only.
‡ TAIYO YUDEN EMK325F106ZH, EMK325BJ106MD, or equivalent ceramic capacitor
§ 24.9-kΩ resistor is applicable for the full range of the ADC.
NOTES: A. External decoupling capacitors are recommended on all power pins.
B. Analog inputs must be driven from an operational amplifier that does not degrade the ADC performance.

Figure 4−5. ADC Pin Connections With Internal Reference (See Notes A and B)

NOTE:

The temperature rating of any recommended component must match the rating of the end product.

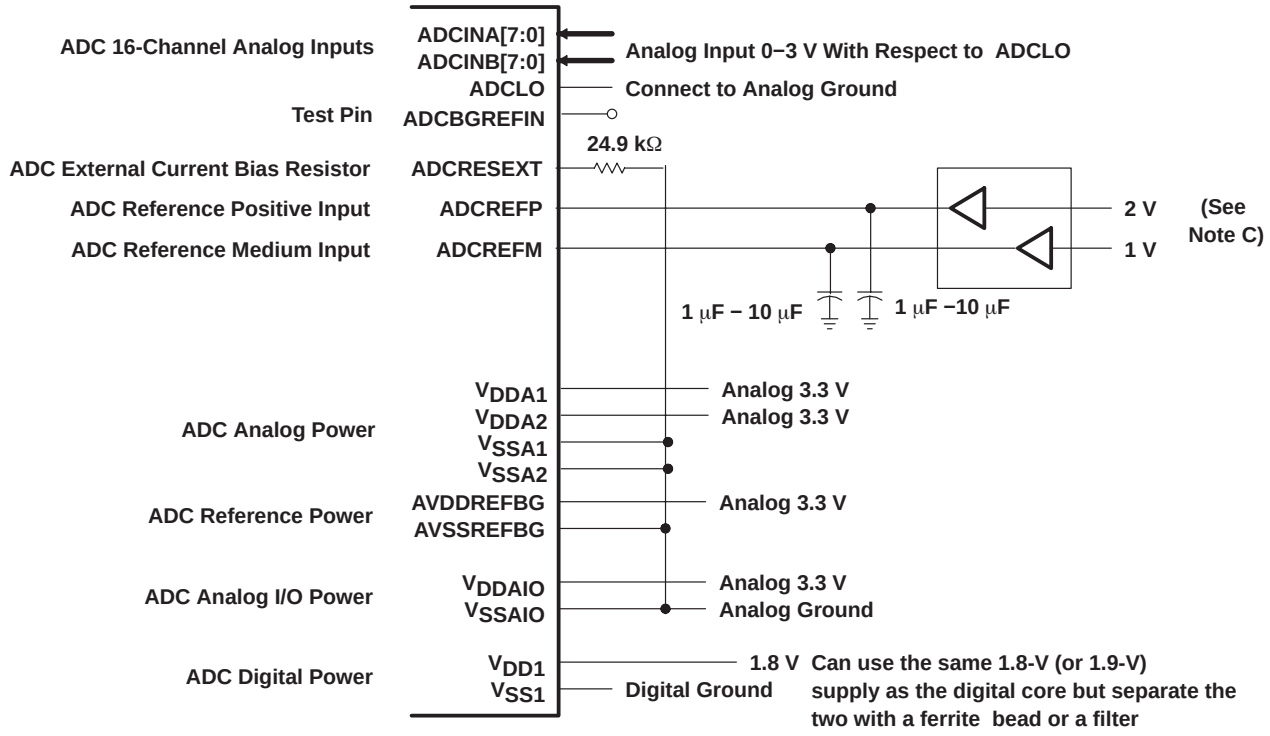

NOTES: A. External decoupling capacitors are recommended on all power pins.
B. Analog inputs must be driven from an operational amplifier that does not degrade the ADC performance.
C. It is recommended that buffered external references be provided with a voltage difference of (ADCREFP−ADCREFM) = 1 V ± 0.1% or better.

External reference is enabled using bit 8 in the ADCTRL3 Register at ADC power up. In this mode, the accuracy of external reference is critical for overall gain. The voltage ADCREFP−ADCREFM will determine the overall accuracy. Do not enable internal references when external references are connected to ADCREFP and ADCREFM. See the *TMS320F28x DSP Analog-to-Digital Converter (ADC) Reference Guide* (literature number SPRU060) for more information.

Figure 4−6. ADC Pin Connections With External Reference

The ADC operation is configured, controlled, and monitored by the registers listed in Table 4−4.

Table 4−4. ADC Registers†

NAME	ADDRESS	SIZE (x16)	DESCRIPTION
ADCTRL1	0x00 7100	1	ADC Control Register 1
ADCTRL2	0x00 7101	1	ADC Control Register 2
ADCMAXCONV	0x00 7102	1	ADC Maximum Conversion Channels Register
ADCCHSELSEQ1	0x00 7103	1	ADC Channel Select Sequencing Control Register 1
ADCCHSELSEQ2	0x00 7104	1	ADC Channel Select Sequencing Control Register 2
ADCCHSELSEQ3	0x00 7105	1	ADC Channel Select Sequencing Control Register 3
ADCCHSELSEQ4	0x00 7106	1	ADC Channel Select Sequencing Control Register 4
ADCASEQSR	0x00 7107	1	ADC Auto-Sequence Status Register
ADCRESULT0	0x00 7108	1	ADC Conversion Result Buffer Register 0
ADCRESULT1	0x00 7109	1	ADC Conversion Result Buffer Register 1
ADCRESULT2	0x00 710A	1	ADC Conversion Result Buffer Register 2
ADCRESULT3	0x00 710B	1	ADC Conversion Result Buffer Register 3
ADCRESULT4	0x00 710C	1	ADC Conversion Result Buffer Register 4
ADCRESULT5	0x00 710D	1	ADC Conversion Result Buffer Register 5
ADCRESULT6	0x00 710E	1	ADC Conversion Result Buffer Register 6
ADCRESULT7	0x00 710F	1	ADC Conversion Result Buffer Register 7
ADCRESULT8	0x00 7110	1	ADC Conversion Result Buffer Register 8
ADCRESULT9	0x00 7111	1	ADC Conversion Result Buffer Register 9
ADCRESULT10	0x00 7112	1	ADC Conversion Result Buffer Register 10
ADCRESULT11	0x00 7113	1	ADC Conversion Result Buffer Register 11
ADCRESULT12	0x00 7114	1	ADC Conversion Result Buffer Register 12
ADCRESULT13	0x00 7115	1	ADC Conversion Result Buffer Register 13
ADCRESULT14	0x00 7116	1	ADC Conversion Result Buffer Register 14
ADCRESULT15	0x00 7117	1	ADC Conversion Result Buffer Register 15
ADCTRL3	0x00 7118	1	ADC Control Register 3
ADCST	0x00 7119	1	ADC Status Register
reserved	0x00 711C 0x00 711F	4	

† The above registers are Peripheral Frame 2 Registers.

4.4 Enhanced Controller Area Network (eCAN) Module

The CAN module has the following features:

- Fully compliant with CAN protocol, version 2.0B
- Supports data rates up to 1 Mbps
- Thirty-two mailboxes, each with the following properties:
  - Configurable as receive or transmit
  - Configurable with standard or extended identifier
  - Has a programmable receive mask
  - Supports data and remote frame
  - Composed of 0 to 8 bytes of data
  - Uses a 32-bit time stamp on receive and transmit message
  - Protects against reception of new message
  - Holds the dynamically programmable priority of transmit message
  - Employs a programmable interrupt scheme with two interrupt levels
  - Employs a programmable alarm on transmission or reception time-out
- Low-power mode
- Programmable wake-up on bus activity
- Automatic reply to a remote request message
- Automatic retransmission of a frame in case of loss of arbitration or error
- 32-bit local network time counter synchronized by a specific message (communication in conjunction with mailbox 16)
- Self-test mode
  - Operates in a loopback mode receiving its own message. A “dummy” acknowledge is provided, thereby eliminating the need for another node to provide the acknowledge bit.

NOTE: For a SYSCLKOUT of 150 MHz, the smallest bit rate possible is 23.4 kbps.

The 28x CAN has passed the conformance test per ISO/DIS 16845. Contact TI for further details.

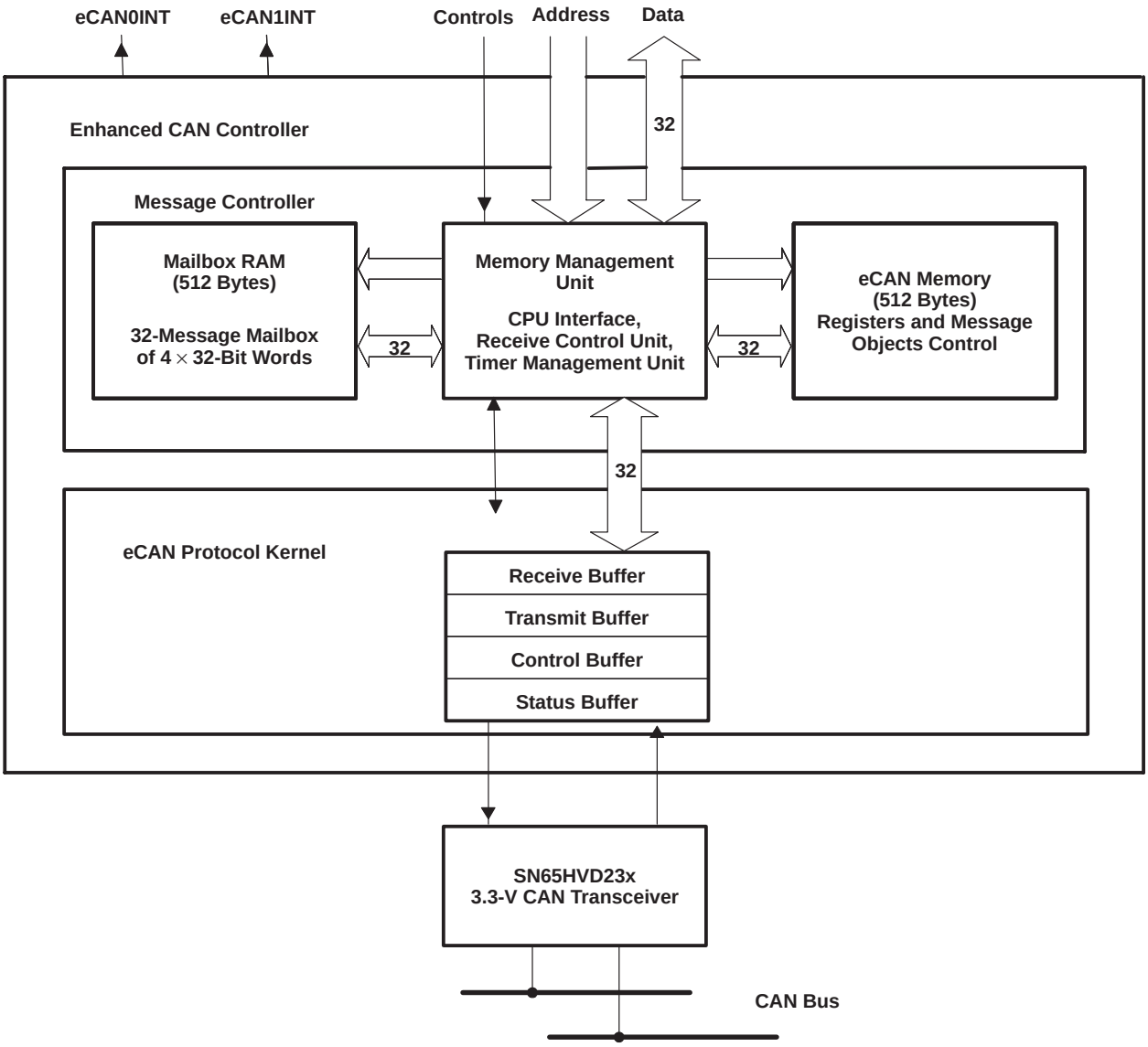

Figure 4−7. eCAN Block Diagram and Interface Circuit

Table 4−5. 3.3-V eCAN Transceivers for the R281x DSPs

PART NUMBER	SUPPLY VOLTAGE	LOW-POWER MODE	SLOPE CONTROL	VREF	OTHER	T_A
SN65HVD230	3.3 V	Standby	Adjustable	Yes	−−	−40°C to 85°C
SN65HVD230Q	3.3 V	Standby	Adjustable	Yes	−−	−40°C to 125°C
SN65HVD231	3.3 V	Sleep	Adjustable	Yes	−−	−40°C to 85°C
SN65HVD231Q	3.3 V	Sleep	Adjustable	Yes	−−	−40°C to 125°C
SN65HVD232	3.3 V	None	None	None	−−	−40°C to 85°C
SN65HVD232Q	3.3 V	None	None	None	−−	−40°C to 125°C
SN65HVD233	3.3 V	Standby	Adjustable	None	Diagnostic Loopback	−40°C to 125°C

Table 4−5. 3.3-V eCAN Transceivers for the TMS320R281x DSPs (Continued)

PART NUMBER	SUPPLY VOLTAGE	LOW-POWER MODE	SLOPE CONTROL	VREF	OTHER	T_A
SN65HVD234	3.3 V	Standby & Sleep	Adjustable	None	−−	−40°C to 125°C
SN65HVD235	3.3 V	Standby	Adjustable	None	Autobaud Loopback	−40°C to 125°C

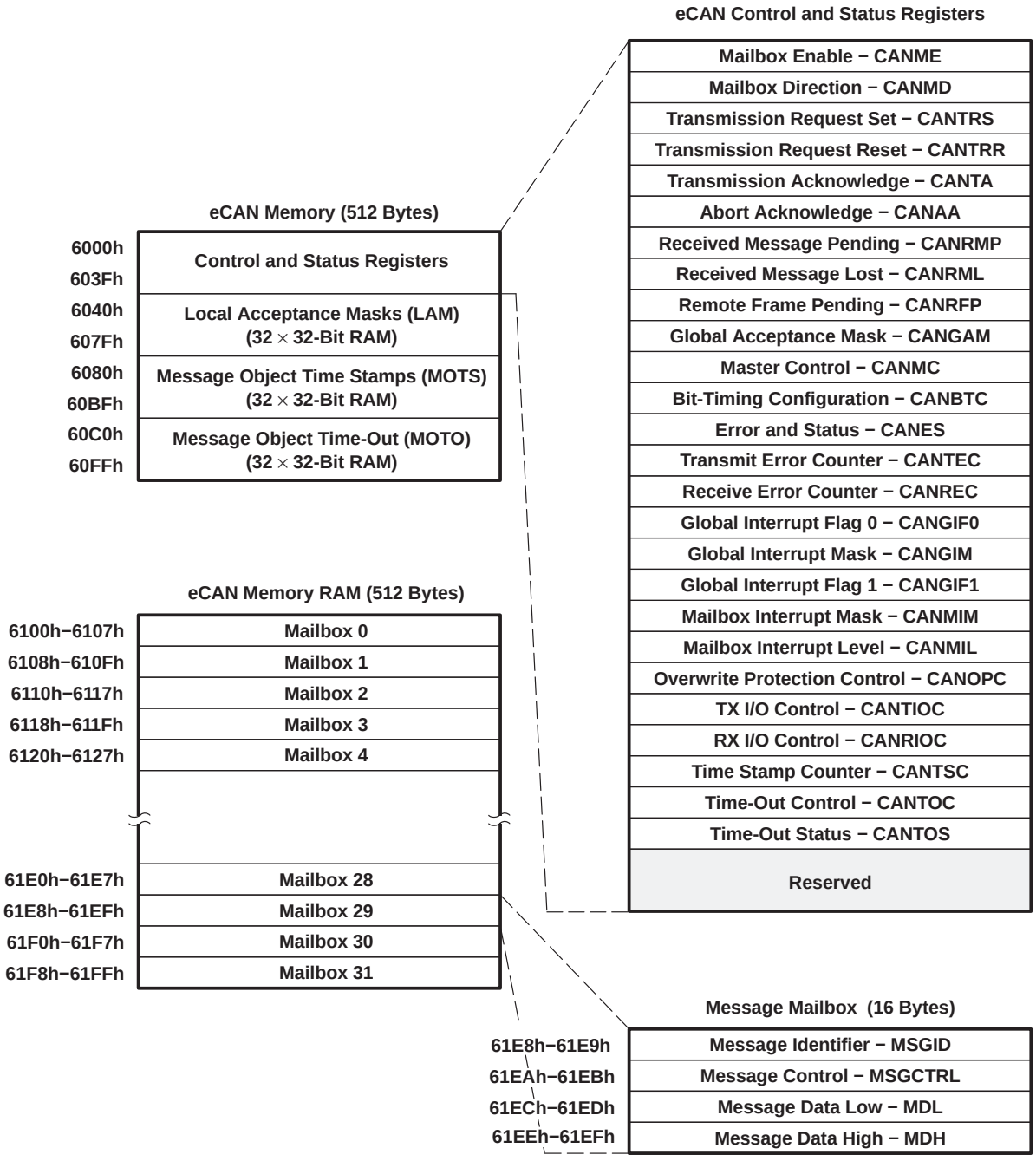

Figure 4−8. eCAN Memory Map

The CAN registers listed in Table 4−6 are used by the CPU to configure and control the CAN controller and the message objects. eCAN control registers only support 32-bit read/write operations. Mailbox RAM can be accessed as 16 bits or 32 bits. 32-bit accesses are aligned to an even boundary.

Table 4−6. CAN Registers Map†

REGISTER NAME	ADDRESS	SIZE (x32)	DESCRIPTION
CANME	0x00 6000	1	Mailbox enable
CANMD	0x00 6002	1	Mailbox direction
CANTRS	0x00 6004	1	Transmit request set
CANTRR	0x00 6006	1	Transmit request reset
CANTA	0x00 6008	1	Transmission acknowledge
CANAA	0x00 600A	1	Abort acknowledge
CANRMP	0x00 600C	1	Receive message pending
CANRML	0x00 600E	1	Receive message lost
CANRFP	0x00 6010	1	Remote frame pending
CANGAM	0x00 6012	1	Global acceptance mask
CANMC	0x00 6014	1	Master control
CANBTC	0x00 6016	1	Bit-timing configuration
CANES	0x00 6018	1	Error and status
CANTEC	0x00 601A	1	Transmit error counter
CANREC	0x00 601C	1	Receive error counter
CANGIF0	0x00 601E	1	Global interrupt flag 0
CANGIM	0x00 6020	1	Global interrupt mask
CANGIF1	0x00 6022	1	Global interrupt flag 1
CANMIM	0x00 6024	1	Mailbox interrupt mask
CANMIL	0x00 6026	1	Mailbox interrupt level
CANOPC	0x00 6028	1	Overwrite protection control
CANTIOC	0x00 602A	1	TX I/O control
CANRIOC	0x00 602C	1	RX I/O control
CANTSC	0x00 602E	1	Time stamp counter (Reserved in SCC mode)
CANTOC	0x00 6030	1	Time-out control (Reserved in SCC mode)
CANTOS	0x00 6032	1	Time-out status (Reserved in SCC mode)

† These registers are mapped to Peripheral Frame 1.

4.5 Multichannel Buffered Serial Port (McBSP) Module

The McBSP module has the following features:

- Compatible to McBSP in TMS320C54x™ /TMS320C55x™ DSP devices, except the DMA features
- Full-duplex communication
- Double-buffered data registers which allow a continuous data stream
- Independent framing and clocking for receive and transmit
- External shift clock generation or an internal programmable frequency shift clock
- A wide selection of data sizes including 8-, 12-, 16-, 20-, 24-, or 32-bits
- 8-bit data transfers with LSB or MSB first
- Programmable polarity for both frame synchronization and data clocks
- HIghly programmable internal clock and frame generation
- Support A-bis mode
- Direct interface to industry-standard CODECs, Analog Interface Chips (AICs), and other serially connected A/D and D/A devices
- Works with SPI-compatible devices
- Two 16 x 16-level FIFO for Transmit channel
- Two 16 x 16-level FIFO for Receive channel

The following application interfaces can be supported on the McBSP:

- T1/E1 framers
- MVIP switching-compatible and ST-BUS-compliant devices including:
  - MVIP framers
  - H.100 framers
  - SCSA framers
  - IOM-2 compliant devices
  - AC97-compliant devices (the necessary multiphase frame synchronization capability is provided.)
  - IIS-compliant devices
- McBSP clock rate = CLKG = $\frac{\text{CLKSRG}}{(1 + \text{CLKGDIV})}$, where CLKSRG source could be LSPCLK, CLKX, or CLKR.

  Serial port performance is limited by I/O buffer switching speed. Internal prescalers must be adjusted such that the peripheral speed is less than the I/O buffer speed limit—20-MHz maximum.

Figure 4−9 shows the block diagram of the McBSP module with FIFO, interfaced to the R281x version of Peripheral Frame 2.

TMS320C54x and TMS320C55x are trademarks of Texas Instruments.

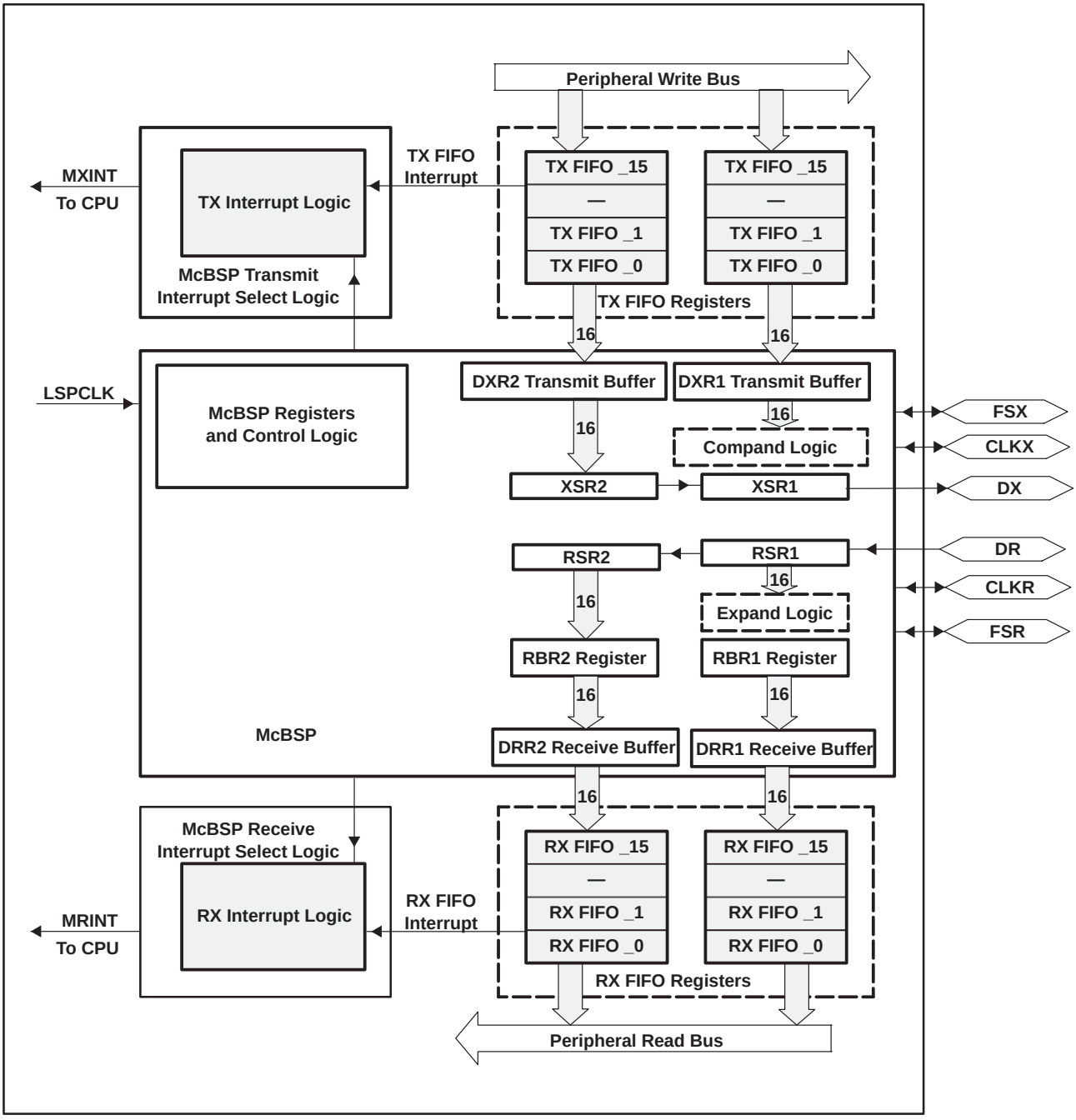

Figure 4−9. McBSP Module With FIFO

Table 4−7 provides a summary of the McBSP registers.

Table 4−7. McBSP Register Summary

NAME	ADDRESS 0x00 78xxh	TYPE (R/W)	RESET VALUE (HEX)	DESCRIPTION
DATA REGISTERS, RECEIVE, TRANSMIT†				
–	–	–	0x0000	McBSP Receive Buffer Register
–	–	–	0x0000	McBSP Receive Shift Register
–	–	–	0x0000	McBSP Transmit Shift Register
DRR2	00	R	0x0000	McBSP Data Receive Register 2 − Read First if the word size is greater than 16 bits, else ignore DRR2
DRR1	01	R	0x0000	McBSP Data Receive Register 1 − Read Second if the word size is greater than 16 bits, else read DRR1 only
DXR2	02	W	0x0000	McBSP Data Transmit Register 2 − Write First if the word size is greater than 16 bits, else ignore DXR2
DXR1	03	W	0x0000	McBSP Data Transmit Register 1 − Write Second if the word size is greater than 16 bits, else write to DXR1 only
McBSP CONTROL REGISTERS				
SPCR2	04	R/W	0x0000	McBSP Serial Port Control Register 2
SPCR1	05	R/W	0x0000	McBSP Serial Port Control Register 1
RCR2	06	R/W	0x0000	McBSP Receive Control Register 2
RCR1	07	R/W	0x0000	McBSP Receive Control Register 1
XCR2	08	R/W	0x0000	McBSP Transmit Control Register 2
XCR1	09	R/W	0x0000	McBSP Transmit Control Register 1
SRGR2	0A	R/W	0x0000	McBSP Sample Rate Generator Register 2
SRGR1	0B	R/W	0x0000	McBSP Sample Rate Generator Register 1
MULTICHANNEL CONTROL REGISTERS				
MCR2	0C	R/W	0x0000	McBSP Multichannel Register 2
MCR1	0D	R/W	0x0000	McBSP Multichannel Register 1
RCERA	0E	R/W	0x0000	McBSP Receive Channel Enable Register Partition A
RCERB	0F	R/W	0x0000	McBSP Receive Channel Enable Register Partition B
XCERA	10	R/W	0x0000	McBSP Transmit Channel Enable Register Partition A
XCERB	11	R/W	0x0000	McBSP Transmit Channel Enable Register Partition B
PCR	12	R/W	0x0000	McBSP Pin Control Register
RCERC	13	R/W	0x0000	McBSP Receive Channel Enable Register Partition C
RCERD	14	R/W	0x0000	McBSP Receive Channel Enable Register Partition D
XCERC	15	R/W	0x0000	McBSP Transmit Channel Enable Register Partition C
XCERD	16	R/W	0x0000	McBSP Transmit Channel Enable Register Partition D

† DRR2/DRR1 and DXR2/DXR1 share the same addresses of receive and transmit FIFO registers in FIFO mode.
‡ FIFO pointers advancing is based on order of access to DRR2/DRR1 and DXR2/DXR1 registers.

Table 4−7. McBSP Register Summary (Continued)

NAME	ADDRESS 0x00 78xxh	TYPE (R/W)	RESET VALUE (HEX)	DESCRIPTION
MULTICHANNEL CONTROL REGISTERS (CONTINUED)				
RCERE	17	R/W	0x0000	McBSP Receive Channel Enable Register Partition E
RCERF	18	R/W	0x0000	McBSP Receive Channel Enable Register Partition F
XCERE	19	R/W	0x0000	McBSP Transmit Channel Enable Register Partition E
XCERF	1A	R/W	0x0000	McBSP Transmit Channel Enable Register Partition F
RCERG	1B	R/W	0x0000	McBSP Receive Channel Enable Register Partition G
RCERH	1C	R/W	0x0000	McBSP Receive Channel Enable Register Partition H
XCERG	1D	R/W	0x0000	McBSP Transmit Channel Enable Register Partition G
XCERH	1E	R/W	0x0000	McBSP Transmit Channel Enable Register Partition H
FIFO MODE REGISTERS (applicable only in FIFO mode)				
FIFO Data Registers‡				
DRR2	00	R	0x0000	McBSP Data Receive Register 2 − Top of receive FIFO − Read First FIFO pointers will not advance
DRR1	01	R	0x0000	McBSP Data Receive Register 1 − Top of receive FIFO − Read Second for FIFO pointers to advance
DXR2	02	W	0x0000	McBSP Data Transmit Register 2 − Top of transmit FIFO − Write First FIFO pointers will not advance
DXR1	03	W	0x0000	McBSP Data Transmit Register 1 − Top of transmit FIFO − Write Second for FIFO pointers to advance
FIFO Control Registers				
MFFTX	20	R/W	0xA000	McBSP Transmit FIFO Register
MFFRX	21	R/W	0x201F	McBSP Receive FIFO Register
MFFCT	22	R/W	0x0000	McBSP FIFO Control Register
MFFINT	23	R/W	0x0000	McBSP FIFO Interrupt Register
MFFST	24	R/W	0x0000	McBSP FIFO Status Register

† DRR2/DRR1 and DXR2/DXR1 share the same addresses of receive and transmit FIFO registers in FIFO mode.
‡ FIFO pointers advancing is based on order of access to DRR2/DRR1 and DXR2/DXR1 registers.

4.6 Serial Communications Interface (SCI) Module

R281x devices include two serial communications interface (SCI) modules. The SCI modules support digital communications between the CPU and other asynchronous peripherals that use the standard non-return-to-zero (NRZ) format. The SCI receiver and transmitter are double-buffered, and each has its own separate enable and interrupt bits. Both can be operated independently or simultaneously in the full-duplex mode. To ensure data integrity, the SCI checks received data for break detection, parity, overrun, and framing errors. The bit rate is programmable to over 65000 different speeds through a 16-bit baud-select register.

Features of each SCI module include:

- Two external pins:
  - SCITXD: SCI transmit-output pin
  - SCIRXD: SCI receive-input pin

  NOTE: Both pins can be used as GPIO if not used for SCI.

- Baud rate programmable to 64K different rates
  - Baud rate $= \frac{\text{LSPCLK}}{(\text{BRR} + 1) * 8}$, when BRR $\neq 0$
    $= \frac{\text{LSPCLK}}{16}$, when BRR = 0

    Serial port performance is limited by I/O buffer switching speed. Internal prescalers must be adjusted such that the peripheral speed is less than the I/O buffer speed limit—20 MHz maximum.
- Data-word format
  - One start bit
  - Data-word length programmable from one to eight bits
  - Optional even/odd/no parity bit
  - One or two stop bits
- Four error-detection flags: parity, overrun, framing, and break detection
- Two wake-up multiprocessor modes: idle-line and address bit
- Half- or full-duplex operation
- Double-buffered receive and transmit functions
- Transmitter and receiver operations can be accomplished through interrupt-driven or polled algorithms with status flags.
  - Transmitter: TXRDY flag (transmitter-buffer register is ready to receive another character) and TX EMPTY flag (transmitter-shift register is empty)
  - Receiver: RXRDY flag (receiver-buffer register is ready to receive another character), BRKDT flag (break condition occurred), and RX ERROR flag (monitoring four interrupt conditions)
- Separate enable bits for transmitter and receiver interrupts (except BRKDT)
- Max bit rate $= \frac{150 \text{ MHz}}{2 \times 8} = 9.375 \times 10^6 \text{ b/s}$
- NRZ (non-return-to-zero) format
- Ten SCI module control registers located in the control register frame beginning at address 7050h

  All registers in this module are 8-bit registers that are connected to Peripheral Frame 2. When a register is accessed, the register data is in the lower byte (7−0), and the upper byte (15−8) is read as zeros. Writing to the upper byte has no effect.

Enhanced features:

- Auto baud-detect hardware logic
- 16-level transmit/receive FIFO

Figure 4−10 shows the SCI module block diagram.

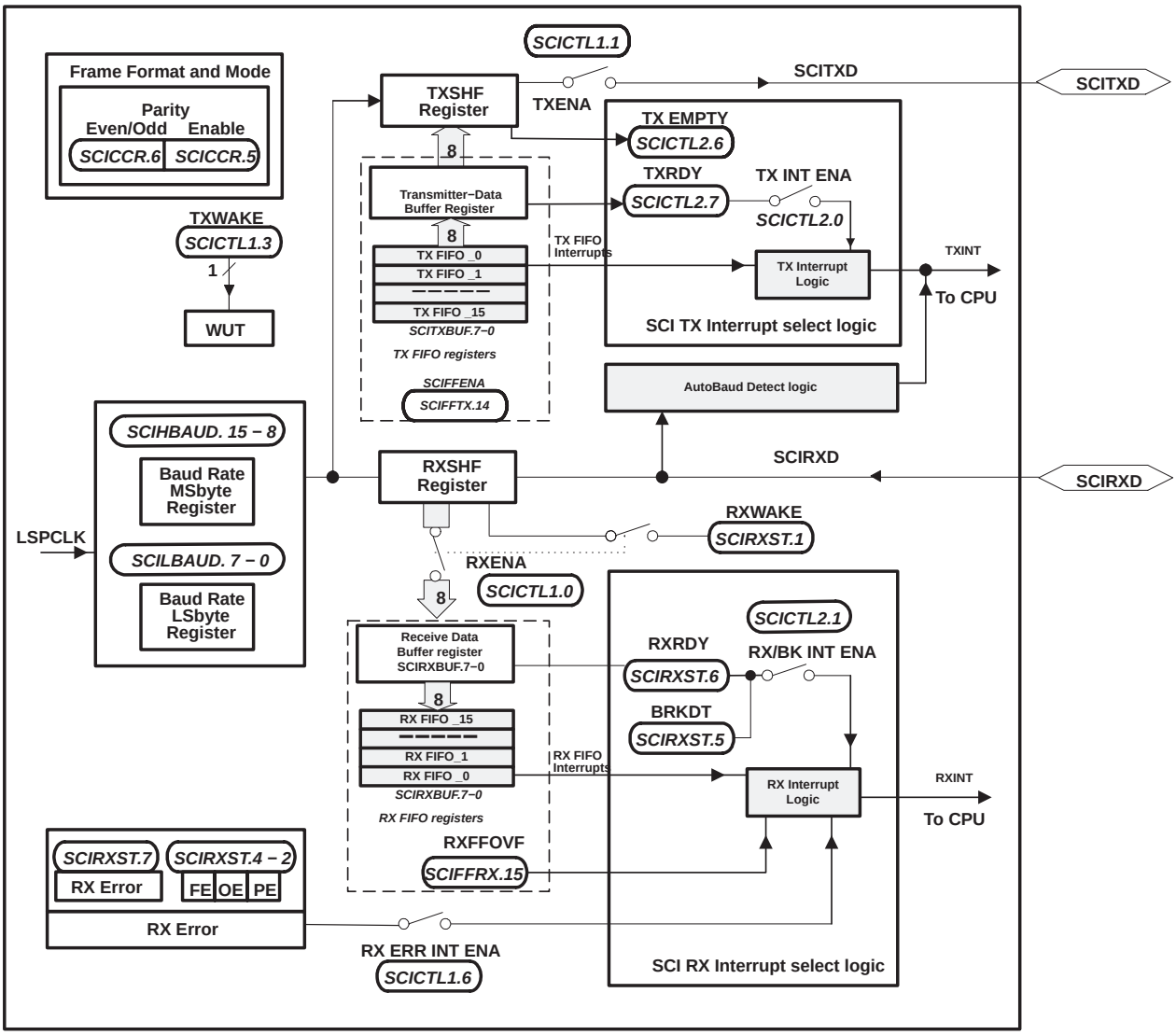

Figure 4−10. Serial Communications Interface (SCI) Module Block Diagram

The SCI port operation is configured and controlled by the registers listed in Table 4−8 and Table 4−9.

Table 4−8. SCI-A Registers†

NAME	ADDRESS	SIZE (x16)	DESCRIPTION
SCICCRA	0x00 7050	1	SCI-A Communications Control Register
SCICTL1A	0x00 7051	1	SCI-A Control Register 1
SCIHBAUDA	0x00 7052	1	SCI-A Baud Register, High Bits
SCILBAUDA	0x00 7053	1	SCI-A Baud Register, Low Bits
SCICTL2A	0x00 7054	1	SCI-A Control Register 2
SCIRXSTA	0x00 7055	1	SCI-A Receive Status Register
SCIRXEMUA	0x00 7056	1	SCI-A Receive Emulation Data Buffer Register
SCIRXBUFA	0x00 7057	1	SCI-A Receive Data Buffer Register
SCITXBUFA	0x00 7059	1	SCI-A Transmit Data Buffer Register
SCIFFTXA	0x00 705A	1	SCI-A FIFO Transmit Register
SCIFFRXA	0x00 705B	1	SCI-A FIFO Receive Register
SCIFFCTA	0x00 705C	1	SCI-A FIFO Control Register
SCIPRIA	0x00 705F	1	SCI-A Priority Control Register

† Shaded registers are new registers for the FIFO mode.

Table 4−9. SCI-B Registers†‡

NAME	ADDRESS	SIZE (x16)	DESCRIPTION
SCICCRB	0x00 7750	1	SCI-B Communications Control Register
SCICTL1B	0x00 7751	1	SCI-B Control Register 1
SCIHBAUDB	0x00 7752	1	SCI-B Baud Register, High Bits
SCILBAUDB	0x00 7753	1	SCI-B Baud Register, Low Bits
SCICTL2B	0x00 7754	1	SCI-B Control Register 2
SCIRXSTB	0x00 7755	1	SCI-B Receive Status Register
SCIRXEMUB	0x00 7756	1	SCI-B Receive Emulation Data Buffer Register
SCIRXBUFB	0x00 7757	1	SCI-B Receive Data Buffer Register
SCITXBUFB	0x00 7759	1	SCI-B Transmit Data Buffer Register
SCIFFTXB	0x00 775A	1	SCI-B FIFO Transmit Register
SCIFFRXB	0x00 775B	1	SCI-B FIFO Receive Register
SCIFFCTB	0x00 775C	1	SCI-B FIFO Control Register
SCIPRIB	0x00 775F	1	SCI-B Priority Control Register

† Shaded registers are new registers for the FIFO mode.
‡ Registers in this table are mapped to peripheral bus 16 space. This space only allows 16-bit accesses. 32-bit accesses produce undefined results.

4.7 Serial Peripheral Interface (SPI) Module

R281x devices include the four-pin serial peripheral interface (SPI) module. The SPI is a high-speed, synchronous serial I/O port that allows a serial bit stream of programmed length (one to sixteen bits) to be shifted into and out of the device at a programmable bit-transfer rate. Normally, the SPI is used for communications between the DSP controller and external peripherals or another processor. Typical applications include external I/O or peripheral expansion through devices such as shift registers, display drivers, and ADCs. Multidevice communications are supported by the master/slave operation of the SPI.

The SPI module features include:

- Four external pins:
  - SPISOMI: SPI slave-output/master-input pin
  - SPISIMO: SPI slave-input/master-output pin
  - $\overline{\text{SPISTE}}$: SPI slave transmit-enable pin
  - SPICLK: SPI serial-clock pin

NOTE: All four pins can be used as GPIO, if the SPI module is not used.

- Two operational modes: master and slave
- Baud rate: 125 different programmable rates
  - Baud rate $= \frac{\text{LSPCLK}}{(\text{SPIBRR} + 1)}$, when BRR $\neq 0$
    $= \frac{\text{LSPCLK}}{4}$, when BRR = 0, 1, 2, 3

    Serial port performance is limited by I/O buffer switching speed. Internal prescalers must be adjusted such that the peripheral speed is less than the I/O buffer speed limit—20 MHz maximum.
- Data word length: one to sixteen data bits
- Four clocking schemes (controlled by clock polarity and clock phase bits) include:
  - Falling edge without phase delay: SPICLK active-high. SPI transmits data on the falling edge of the SPICLK signal and receives data on the rising edge of the SPICLK signal.
  - Falling edge with phase delay: SPICLK active-high. SPI transmits data one half-cycle ahead of the falling edge of the SPICLK signal and receives data on the falling edge of the SPICLK signal.
  - Rising edge without phase delay: SPICLK inactive-low. SPI transmits data on the rising edge of the SPICLK signal and receives data on the falling edge of the SPICLK signal.
  - Rising edge with phase delay: SPICLK inactive-low. SPI transmits data one half-cycle ahead of the falling edge of the SPICLK signal and receives data on the rising edge of the SPICLK signal.
- Simultaneous receive and transmit operation (transmit function can be disabled in software)
- Transmitter and receiver operations are accomplished through either interrupt-driven or polled algorithms.
- Nine SPI module control registers: Located in control register frame beginning at address 7040h.

  All registers in this module are 16-bit registers that are connected to Peripheral Frame 2. When a register is accessed, the register data is in the lower byte (7−0), and the upper byte (15−8) is read as zeros. Writing to the upper byte has no effect.

Enhanced feature:

- 16-level transmit/receive FIFO
- Delayed transmit control

The SPI port operation is configured and controlled by the registers listed in Table 4−10.

Table 4−10. SPI Registers

NAME	ADDRESS	SIZE (x16)	DESCRIPTION
SPICCR	0x00 7040	1	SPI Configuration Control Register
SPICTL	0x00 7041	1	SPI Operation Control Register
SPISTS	0x00 7042	1	SPI Status Register
SPIBRR	0x00 7044	1	SPI Baud Rate Register
SPIRXEMU	0x00 7046	1	SPI Receive Emulation Buffer Register
SPIRXBUF	0x00 7047	1	SPI Serial Input Buffer Register
SPITXBUF	0x00 7048	1	SPI Serial Output Buffer Register
SPIDAT	0x00 7049	1	SPI Serial Data Register
SPIFFTX	0x00 704A	1	SPI FIFO Transmit Register
SPIFFRX	0x00 704B	1	SPI FIFO Receive Register
SPIFFCT	0x00 704C	1	SPI FIFO Control Register
SPIPRI	0x00 704F	1	SPI Priority Control Register

NOTE: The registers in this table are mapped to Peripheral Frame 2. This space only allows 16-bit accesses. 32-bit accesses produce undefined results.

Figure 4−11 is a block diagram of the SPI in slave mode.

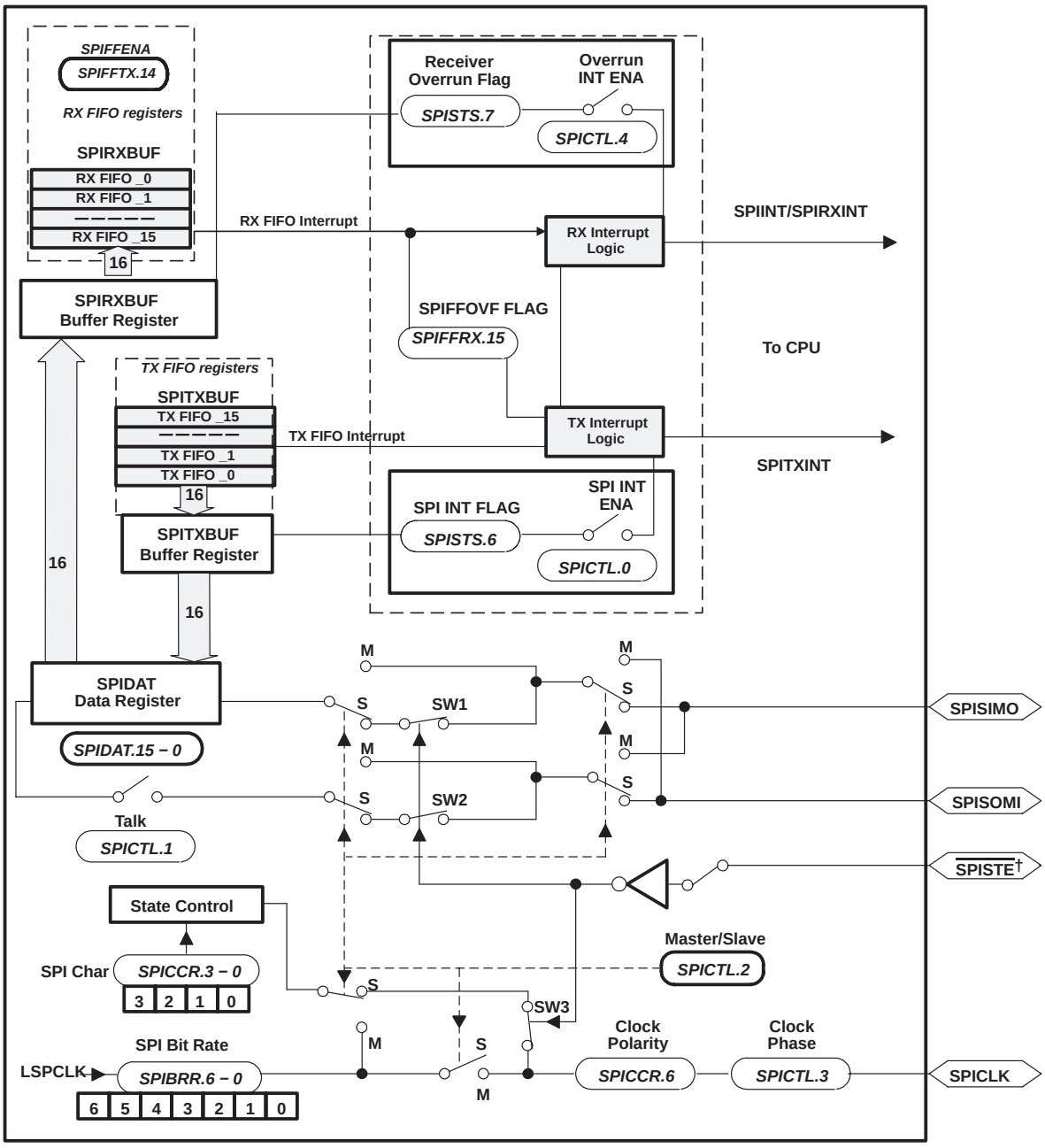

† $\overline{\text{SPISTE}}$ is driven low by the master for a slave device.

Figure 4−11. Serial Peripheral Interface Module Block Diagram (Slave Mode)

4.8 GPIO MUX

The GPIO MUX registers, are used to select the operation of shared pins on R281x devices. The pins can be individually selected to operate as “Digital I/O” or connected to “Peripheral I/O” signals (via the GPxMUX registers). If selected for “Digital I/O” mode, registers are provided to configure the pin direction (via the GPxDIR registers) and to qualify the input signal to remove unwanted noise (via the GPxQUAL) registers). Table 4−11 lists the GPIO MUX Registers.

Table 4−11. GPIO MUX Registers†‡§

NAME	ADDRESS	SIZE (x16)	REGISTER DESCRIPTION
GPAMUX	0x00 70C0	1	GPIO A MUX Control Register
GPADIR	0x00 70C1	1	GPIO A Direction Control Register
GPAQUAL	0x00 70C2	1	GPIO A Input Qualification Control Register
reserved	0x00 70C3	1	
GPBMUX	0x00 70C4	1	GPIO B MUX Control Register
GPBDIR	0x00 70C5	1	GPIO B Direction Control Register
GPBQUAL	0x00 70C6	1	GPIO B Input Qualification Control Register
reserved	0x00 70C7	1	
reserved	0x00 70C8	1	
reserved	0x00 70C9	1	
reserved	0x00 70CA	1	
reserved	0x00 70CB	1	
GPDMUX	0x00 70CC	1	GPIO D MUX Control Register
GPDDIR	0x00 70CD	1	GPIO D Direction Control Register
GPDQUAL	0x00 70CE	1	GPIO D Input Qualification Control Register
reserved	0x00 70CF	1	
GPEMUX	0x00 70D0	1	GPIO E MUX Control Register
GPEDIR	0x00 70D1	1	GPIO E Direction Control Register
GPEQUAL	0x00 70D2	1	GPIO E Input Qualification Control Register
reserved	0x00 70D3	1	
GPFMUX	0x00 70D4	1	GPIO F MUX Control Register
GPFDIR	0x00 70D5	1	GPIO F Direction Control Register
reserved	0x00 70D6	1	
reserved	0x00 70D7	1	
GPGMUX	0x00 70D8	1	GPIO G MUX Control Register
GPGDIR	0x00 70D9	1	GPIO G Direction Control Register
reserved	0x00 70DA	1	
reserved	0x00 70DB	1	
reserved	0x00 70DC 0x00 70DF	4	

† Reserved locations will return undefined values and writes will be ignored.
‡ Not all inputs will support input signal qualification.
§ These registers are EALLOW protected. This prevents spurious writes from overwriting the contents and corrupting the system.

If configured for digital I/O mode, additional registers are provided for setting individual I/O signals (via the GPxSET registers), for clearing individual I/O signals (via the GPxCLEAR registers), for toggling individual I/O signals (via the GPxTOGGLE registers), or for reading/writing to the individual I/O signals (via the GPxDAT registers). Table 4−12 lists the GPIO Data Registers. For more information, see the *TMS320F28x System Control and Interrupts Reference Guide* (literature number SPRU078).

Table 4−12. GPIO Data Registers†‡

NAME	ADDRESS	SIZE (x16)	REGISTER DESCRIPTION
GPADAT	0x00 70E0	1	GPIO A Data Register
GPASET	0x00 70E1	1	GPIO A Set Register
GPACLEAR	0x00 70E2	1	GPIO A Clear Register
GPATOGGLE	0x00 70E3	1	GPIO A Toggle Register
GPBDAT	0x00 70E4	1	GPIO B Data Register
GPBSET	0x00 70E5	1	GPIO B Set Register
GPBCLEAR	0x00 70E6	1	GPIO B Clear Register
GPBTOGGLE	0x00 70E7	1	GPIO B Toggle Register
reserved	0x00 70E8	1	
reserved	0x00 70E9	1	
reserved	0x00 70EA	1	
reserved	0x00 70EB	1	
GPDDAT	0x00 70EC	1	GPIO D Data Register
GPDSET	0x00 70ED	1	GPIO D Set Register
GPDCLEAR	0x00 70EE	1	GPIO D Clear Register
GPDTOGGLE	0x00 70EF	1	GPIO D Toggle Register
GPEDAT	0x00 70F0	1	GPIO E Data Register
GPESET	0x00 70F1	1	GPIO E Set Register
GPECLEAR	0x00 70F2	1	GPIO E Clear Register
GPETOGGLE	0x00 70F3	1	GPIO E Toggle Register
GPFDAT	0x00 70F4	1	GPIO F Data Register
GPFSET	0x00 70F5	1	GPIO F Set Register
GPFCLEAR	0x00 70F6	1	GPIO F Clear Register
GPFTOGGLE	0x00 70F7	1	GPIO F Toggle Register
GPGDAT	0x00 70F8	1	GPIO G Data Register
GPGSET	0x00 70F9	1	GPIO G Set Register
GPGCLEAR	0x00 70FA	1	GPIO G Clear Register
GPGTOGGLE	0x00 70FB	1	GPIO G Toggle Register
reserved	0x00 70FC 0x00 70FF	4	

† Reserved locations will return undefined values and writes will be ignored.
‡ These registers are NOT EALLOW protected. The above registers will typically be accessed regularly by the user.

Figure 4−12 shows how the various register bits select the various modes of operation for GPIO function.

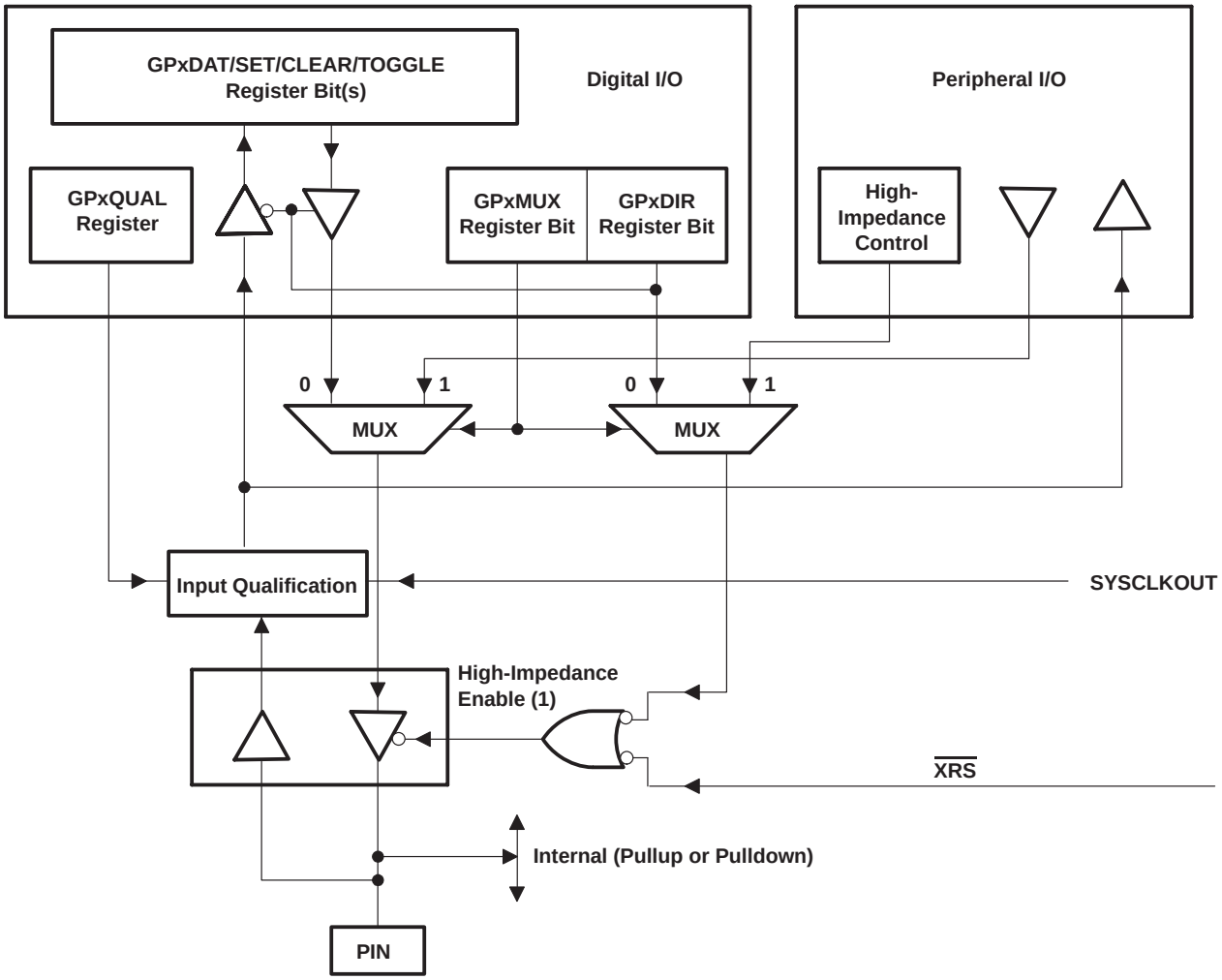

NOTES: A. In the GPIO mode, when the GPIO pin is configured for output operation, reading the GPxDAT data register only gives the value written, not the value at the pin. In the peripheral mode, the state of the pin can be read through the GPxDAT register, provided the corresponding direction bit is zero (input mode).

B. Some selected input signals are qualified by the SYSCLKOUT. The GPxQUAL register specifies the qualification sampling period. The sampling window is 6 samples wide and the output is only changed when all samples are the same (all 0's or all 1's). This feature removes unwanted spikes from the input signal.

Figure 4−12. GPIO/Peripheral Pin MUXing

NOTE:

The input function of the GPIO pin and the input path to the peripheral are always enabled. It is the output function of the GPIO pin that is multiplexed with the output path of the primary (peripheral) function. Since the output buffer of a pin connects back to the input buffer, any GPIO signal present at the pin will be propagated to the peripheral module as well. Therefore, when a pin is configured for GPIO operation, the corresponding peripheral functionality (and interrupt-generating capability) must be disabled. Otherwise, interrupts may be inadvertently triggered. This is especially critical when the $\overline{\text{PDPINTA}}$ and $\overline{\text{PDPINTB}}$ pins are used as GPIO pins, since a value of zero for GPDDAT.0 or GPDDAT.5 ($\overline{\text{PDPINTx}}$) will put PWM pins in a high-impedance state. The $\overline{\text{CxTRIP}}$ and $\overline{\text{TxCTRIP}}$ pins will also put the corresponding PWM pins in high impedance, if they are driven low (as GPIO pins) *and* bit EXTCONx.0 = 1.

5 Development Support

Texas Instruments (TI) offers an extensive line of development tools for the C28x™ generation of DSPs, including tools to evaluate the performance of the processors, generate code, develop algorithm implementations, and fully integrate and debug software and hardware modules.

The following products support development of R281x-based applications:

Software Development Tools

- Code Composer Studio™ Integrated Development Environment (IDE)
  - C/C++ Compiler
  - Code generation tools
  - Assembler/Linker
  - Cycle Accurate Simulator
- Application algorithms
- Sample applications code

Hardware Development Tools

- R2812 eZdsp
- JTAG-based emulators − SPI515, XDS510PP, XDS510PP Plus, XDS510 USB
- Universal 5-V dc power supply
- Documentation and cables

5.1 Device and Development Support Tool Nomenclature

To designate the stages in the product development cycle, TI assigns prefixes to the part numbers of all [TMS320] DSP devices and support tools. Each [TMS320] DSP commercial family member has one of three prefixes: TMX, TMP, or TMS (e.g., TMS320R2812GHH). Texas Instruments recommends two of three possible prefix designators for its support tools: TMDX and TMDS. These prefixes represent evolutionary stages of product development from engineering prototypes (TMX/TMDX) through fully qualified production devices/tools (TMS/TMDS).

TMX Experimental device that is not necessarily representative of the final device's electrical specifications

TMP Final silicon die that conforms to the device's electrical specifications but has not completed quality and reliability verification

TMS Fully qualified production device

Support tool development evolutionary flow:

TMDX Development-support product that has not yet completed Texas Instruments internal qualification testing.

TMDS Fully qualified development-support product

TMX and TMP devices and TMDX development−support tools are shipped against the following disclaimer:

"Developmental product is intended for internal evaluation purposes."

TMS devices and TMDS development-support tools have been characterized fully, and the quality and reliability of the device have been demonstrated fully. TI's standard warranty applies.

TMS320 is a trademark of Texas Instruments.

Predictions show that prototype devices (TMX or TMP) have a greater failure rate than the standard production devices. Texas Instruments recommends that these devices not be used in any production system because their expected end-use failure rate still is undefined. Only qualified production devices are to be used.

TI device nomenclature also includes a suffix with the device family name. This suffix indicates the package type (for example, PBK) and temperature range (for example, A). Figure 5−1 provides a legend for reading the complete device name for any TMS320x28x family member.

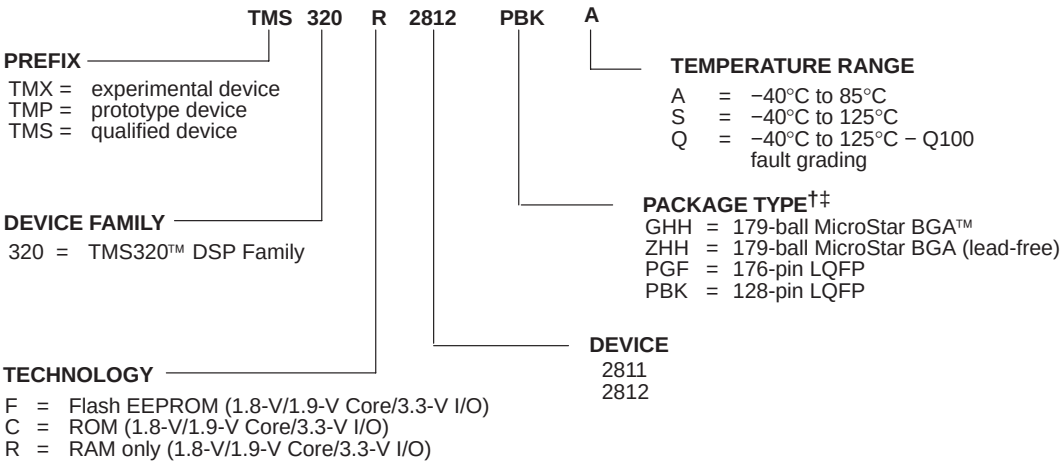

† BGA = Ball Grid Array
LQFP = Low-Profile Quad Flatpack
‡ LQFP package not yet available lead (Pb)-free. For estimated conversion dates, go to www.ti.com/leadfree

Figure 5−1. TMS320x28x Device Nomenclature

5.2 Documentation Support

Extensive documentation supports all of the TMS320™ DSP family generations of devices from product announcement through applications development. The types of documentation available include: data sheets and data manuals, with design specifications; and hardware and software applications. Useful reference documentation includes:

TMS320C28x DSP CPU and Instruction Set Reference Guide (literature number SPRU430) describes the central processing unit (CPU) and the assembly language instructions of the TMS320C28x™ fixed-point digital signal processors (DSPs). It also describes emulation features available on these DSPs.

TMS320x281x Analog-to-Digital Converter (ADC) Reference Guide (literature number SPRU060) describes the ADC module. The module is a 12-bit pipelined ADC. The analog circuits of this converter, referred to as the core in this document, include the front-end analog multiplexers (MUXs), sample-and-hold (S/H) circuits, the conversion core, voltage regulators, and other analog supporting circuits. Digital circuits, referred to as the wrapper in this document, include programmable conversion sequencer, result registers, interface to analog circuits, interface to device peripheral bus, and interface to other on-chip modules.

TMS320x281x Boot ROM Reference Guide (literature number SPRU095) describes the purpose and features of the bootloader (factory-programmed boot-loading software). It also describes other contents of the device on-chip boot ROM and identifies where all of the information is located within that memory.

TMS320x281x Event Manager (EV) Reference Guide (literature number SPRU065) describes the EV modules that provide a broad range of functions and features that are particularly useful in motion control and motor control applications. The EV modules include general-purpose (GP) timers, full-compare/PWM units, capture units, and quadrature-encoder pulse (QEP) circuits.

TMS320x281x External Interface (XINTF) Reference Guide (literature number SPRU067) describes the external interface (XINTF) of the 281x digital signal processors (DSPs).

TMS320x281x Multi-channel Buffered Serial Ports (McBSPs) Reference Guide (literature number SPRU061) describes the McBSP) available on the 281x devices. The McBSPs allow direct interface between a DSP and other devices in a system.

TMS320x281x System Control and Interrupts Reference Guide (literature number SPRU078) describes the various interrupts and system control features of the 281x digital signal processors (DSPs).

TMS320x281x, 280x Enhanced Controller Area Network (eCAN) Reference Guide (literature number SPRU074) describes the eCAN that uses established protocol to communicate serially with other controllers in electrically noisy environments. With 32 fully configurable mailboxes and time-stamping feature, the eCAN module provides a versatile and robust serial communication interface. The eCAN module implemented in the C28x DSP is compatible with the CAN 2.0B standard (active).

TMS320x281x, 280x Peripheral Reference Guide (literature number SPRU566) describes the peripheral reference guides of the 28x digital signal processors (DSPs).

TMS320x281x, 280x Serial Communication Interface (SCI) Reference Guide (literature number SPRU051) describes the SCI that is a two-wire asynchronous serial port, commonly known as a UART. The SCI modules support digital communications between the CPU and other asynchronous peripherals that use the standard non-return-to-zero (NRZ) format.

TMS320x281x, 280x Serial Peripheral Interface (SPI) Reference Guide (literature number SPRU059) describes the SPI − a high-speed synchronous serial input/output (I/O) port that allows a serial bit stream of programmed length (one to sixteen bits) to be shifted into and out of the device at a programmed bit-transfer rate. The SPI is used for communications between the DSP controller and external peripherals or another controller.

3.3 V DSP for Digital Motor Control Application Report (literature number SPRA550). New generations of motor control digital signal processors (DSPs) lower their supply voltages from 5 V to 3.3 V to offer higher performance at lower cost. Replacing traditional 5-V digital control circuitry by 3.3-V designs introduce no additional system cost and no significant complication in interfacing with TTL and CMOS compatible components, as well as with mixed voltage ICs such as power transistor gate drivers. Just like 5-V based designs, good engineering practice should be exercised to minimize noise and EMI effects by proper component layout and PCB design when 3.3-V DSP, ADC, and digital circuitry are used in a mixed signal environment, with high and low voltage analog and switching signals, such as a motor control system. In addition, software techniques such as Random PWM method can be used by special features of the Texas Instruments (TI) TMS320x24xx DSP controllers to significantly reduce noise effects caused by EMI radiation.

This application report reviews designs of 3.3-V DSP versus 5-V DSP for low HP motor control applications. The application report first describes a scenario of a 3.3-V-only motor controller indicating that for most applications, no significant issue of interfacing between 3.3 V and 5 V exists. Cost-effective 3.3-V − 5-V interfacing techniques are then discussed for the situations where such interfacing is needed. On-chip 3.3-V ADC versus 5-V ADC is also discussed. Sensitivity and noise effects in 3.3-V and 5-V ADC conversions are addressed. Guidelines for component layout and printed circuit board (PCB) design that can reduce system's noise and EMI effects are summarized in the last section.

The TMS320C28x Instruction Set Simulator Technical Overview (literature number SPRU608) describes the simulator, available within the Code Composer Studio for TMS320C2000 IDE, that simulates the instruction set of the C28x core.

TMS320C28x DSP/BIOS Application Programming Interface (API) Reference Guide (literature number SPRU625) describes development using DSP/BIOS.

TMS320C28x Assembly Language Tools User's Guide (literature number SPRU513) describes the assembly language tools (assembler and other tools used to develop assembly language code), assembler directives, macros, common object file format, and symbolic debugging directives for the TMS320C28x™ device.

TMS320C28x Optimizing C Compiler User's Guide (literature number SPRU514) describes the TMS320C28x™ C/C++ compiler. This compiler accepts ANSI standard C/C++ source code and produces TMS320™ DSP assembly language source code for the TMS320C28x device.

Programming Examples for the TMS320F281x eCAN (literature number SPRA876) contains several programming examples to illustrate how the eCAN module is set up for different modes of operation. The objective is to help you come up to speed quickly in programming the eCAN. All programs have been extensively commented to aid easy understanding. The CANalyzer tool from Vector CANtech, Inc. was used to monitor and control the bus operation. All projects and CANalyzer configuration files are included in the attached SPRA876.zip file.

TMS320F2810, TMS320F2811, TMS320F2812 ADC Calibration (literature number SPRA989) describes a method for improving the absolute accuracy of the 12-bit analog-to-digital converter (ADC) found on the F2810/F2811/F2812 devices. Due to inherent gain and offset errors, the absolute accuracy of the ADC is impacted. The methods described in this application note can improve the absolute accuracy of the ADC to achieve levels better than 0.5%. This application note is accompanied by an example program (ADCcalibration.zip) that executes from RAM on the F2812 EzDSP.

A series of DSP textbooks is published by Prentice-Hall and John Wiley & Sons to support digital signal processing research and education. The TMS320™ DSP newsletter, *Details on Signal Processing*, is published quarterly and distributed to update TMS320™ DSP customers on product information.

Updated information on the TMS320™ DSP controllers can be found on the worldwide web at: **http://www.ti.com**.

To send comments regarding this data manual, use the *comments@books.sc.ti.com* email address, which is a repository for feedback. For questions and support, contact the Product Information Center listed at the **http://www.ti.com/sc/docs/pic/home.htm** site.

6 Electrical Specifications

This section provides the absolute maximum ratings and the recommended operating conditions for the TMS320R281x DSPs.

6.1 Absolute Maximum Ratings

Unless otherwise noted, the list of absolute maximum ratings are specified over operating temperature ranges. Stresses beyond those listed under Absolute Maximum Ratings may cause permanent damage to the device. These are stress ratings only, and functional operation of the device at these or any other conditions beyond those indicated under Section 6.2 is not implied. Exposure to absolute-maximum-rated conditions for extended periods may affect device reliability. All voltage values are with respect to V_{SS}.

Supply voltage range, V_{DDIO}, V_{DDA1}, V_{DDA2}, V_{DDAIO}, and $AV_{DDREFBG}$ . . . . . − 0.3 V to 4.6 V

Supply voltage range, V_{DD}, V_{DD1} . . . . . − 0.5 V to 2.5 V

Input voltage range, V_{IN} . . . . . − 0.3 V to 4.6 V

Output voltage range, V_O . . . . . − 0.3 V to 4.6 V

Input clamp current, I_{IK} ($V_{IN} < 0$ or $V_{IN} > V_{DDIO}$)† . . . . . ± 20 mA

Output clamp current, I_{OK} ($V_O < 0$ or $V_O > V_{DDIO}$) . . . . . ± 20 mA

Operating ambient temperature ranges, T_A: A version (GHH, ZHH, PGF, PBK)‡ . . . . . − 40°C to 85°C

T_A: S/Q version (GHH, ZHH, PGF, PBK)‡ . . . . . − 40°C to 125°C

T_A: Q version (PGF, PBK)‡ . . . . . − 40°C to 125°C

Storage temperature range, T_{stg}† . . . . . − 65°C to 150°C

† Continuous clamp current per pin is± 2 mA

‡ Long-term high-temperature storage and/or extended use at maximum temperature conditions may result in a reduction of overall device life. For additional information, see *IC Package Thermal Metrics Application Report* (literature number SPRA953) and *Reliability Data for TMS320LF24x and TMS320F281x Devices Application Repor*t (literature number SPRA963).

§ Replaced by Q temperature option from silicon revision E onwards

6.2 Recommended Operating Conditions†

				MIN	NOM	MAX	UNIT
V_{DDIO}	Device supply voltage, I/O			3.14	3.3	3.47	V
V_{DD}, V_{DD1}	Device supply voltage, CPU		1.8 V (135 MHz)	1.71	1.8	1.89	V
			1.9 V (150 MHz)	1.81	1.9	2	
V_{SS}	Supply ground				0		V
V_{DDA1}, V_{DDA2}, $AV_{DDREFBG}$, V_{DDAIO}	ADC supply voltage			3.14	3.3	3.47	V
$f_{SYSCLKOUT}$	Device clock frequency (system clock)		V_{DD} = 1.9 V ± 5%	2		150	MHz
			V_{DD} = 1.8 V ± 5%	2		135	
V_{IH}	High-level input voltage		All inputs except X1/XCLKIN	2		V_{DDIO}	V
			X1/XCLKIN (@ 50 µA max)	$0.7V_{DD}$		V_{DD}	
V_{IL}	Low-level input voltage		All inputs except X1/XCLKIN			0.8	V
			X1/XCLKIN (@ 50 µA max)			$0.3V_{DD}$	
I_{OH}	High-level output source current, V_{OH} = 2.4 V		All I/Os except Group 2			− 4	mA
			Group 2‡			− 8	
I_{OL}	Low-level output sink current, V_{OL} = V_{OL} MAX		All I/Os except Group 2			4	mA
			Group 2‡			8	
T_A	Ambient temperature	A version		− 40		85	°C
		Q version		− 40		125	°C

† See Section 6.7 for power sequencing of V_{DDIO}, V_{DDAIO}, V_{DD}, V_{DDA1}, V_{DDA2}, and $AV_{DDREFBG}$.
‡ Group 2 pins are as follows: XINTF pins, T1CTRIP_PDPINTA, TDO, XCLKOUT, XF, EMU0, and EMU1.

6.3 Electrical Characteristics Over Recommended Operating Conditions (Unless Otherwise Noted)

PARAMETER			TEST CONDITIONS	MIN	TYP	MAX	UNIT
V_{OH}	High-level output voltage		I_{OH} = I_{OH}MAX	2.4			V
			I_{OH} = 50 µA	V_{DDIO} − 0.2			
V_{OL}	Low-level output voltage		I_{OL} = I_{OL}MAX			0.4	V
I_{IL}	Input current (low level)	With pullup	V_{DDIO} = 3.3 V, V_{IN} = 0 V	−80	−140	−190	µA
		With pulldown	V_{DDIO} = 3.3 V, V_{IN} = 0 V			±2	
I_{IH}	Input current (high level)	With pullup	V_{DDIO} = 3.3 V, V_{IN} = V_{DD}			±2	µA
		With pulldown¶	V_{DDIO} = 3.3 V, V_{IN} = V_{DD}	28	50	80	
I_{OZ}	Output current, high-impedance state (off-state)		V_O = V_{DDIO} or 0 V			±2	µA
C_i	Input capacitance				2		pF
C_o	Output capacitance				3		pF

§ The following pins have no internal PU/PD: GPIOE0, GPIOE1, GPIOF0, GPIOF1, GPIOF2, GPIOF3, GPIOF12, GPIOG4, and GPIOG5.
¶ The following pins have an internal pulldown: XMP/MC, TESTSEL, and TRST.

6.4 Current Consumption by Power-Supply Pins Over Recommended Operating Conditions During Low-Power Modes at 150-MHz SYSCLKOUT (TMS320R281x)

MODE	TEST CONDITIONS	I_{DD}		I_{DDIO}		I_{DDA}†	
		TYP	MAX‡	TYP	MAX‡	TYP	MAX‡
Operational	All peripheral clocks are enabled. All PWM pins are toggled at 100 kHz. Data is continuously transmitted out of the SCIA, SCIB, and CAN ports. The hardware multiplier is exercised. Code is running out of internal SARAM.	210 mA	260 mA	20 mA	30mA	40 mA	50 mA
IDLE	– XCLKOUT is turned off – All peripheral clocks are on, except ADC	140 mA	155 mA	20 mA	30 mA	5 µA	10 µA
STANDBY	– Peripheral clocks are turned off – Pins without an internal PU/PD are tied high/low	5 mA	10 mA	5 µA	20 µA	5 µA	10 µA
HALT	– Peripheral clocks are turned off – Pins without an internal PU/PD are tied high/low – Input clock is disabled	70 µA		5 µA	10 µA	1 µA	

† I_{DDA} includes current into V_{DDA1}, V_{DDA2}, V_{DD1}, $AV_{DDREFBG}$, and V_{DDAIO} pins.
‡ MAX numbers are at 125°C, and max voltage (V_{DD} = 2.0 V; V_{DDIO}, V_{DDA} = 3.6 V).

NOTE:
HALT and STANDBY modes cannot be used when the PLL is disabled.

6.5 Current Consumption Graphs

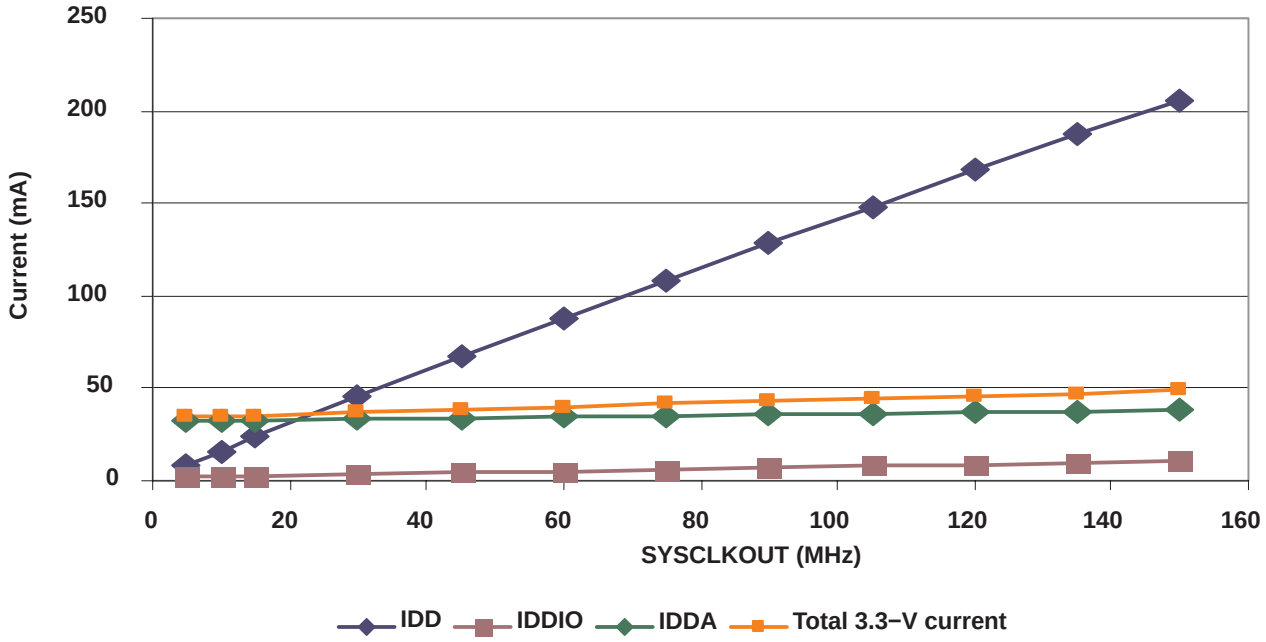

NOTES: A. Test conditions are as defined in Table 6−4 for operational currents.
B. I_{DD} represents the total current drawn from the 1.8-V rail (V_{DD}). It includes a small amount of current (<1 mA) drawn by V_{DD1}.
C. IDDA represents the current drawn by VDDA1 and VDDA2 rails.
D. Total 3.3-V current is the sum of I_{DDIO} and I_{DDA}. It includes a trivial amount of current (<1 mA) drawn by VDDAIO.

Figure 6−1. Typical Current Consumption Over Frequency

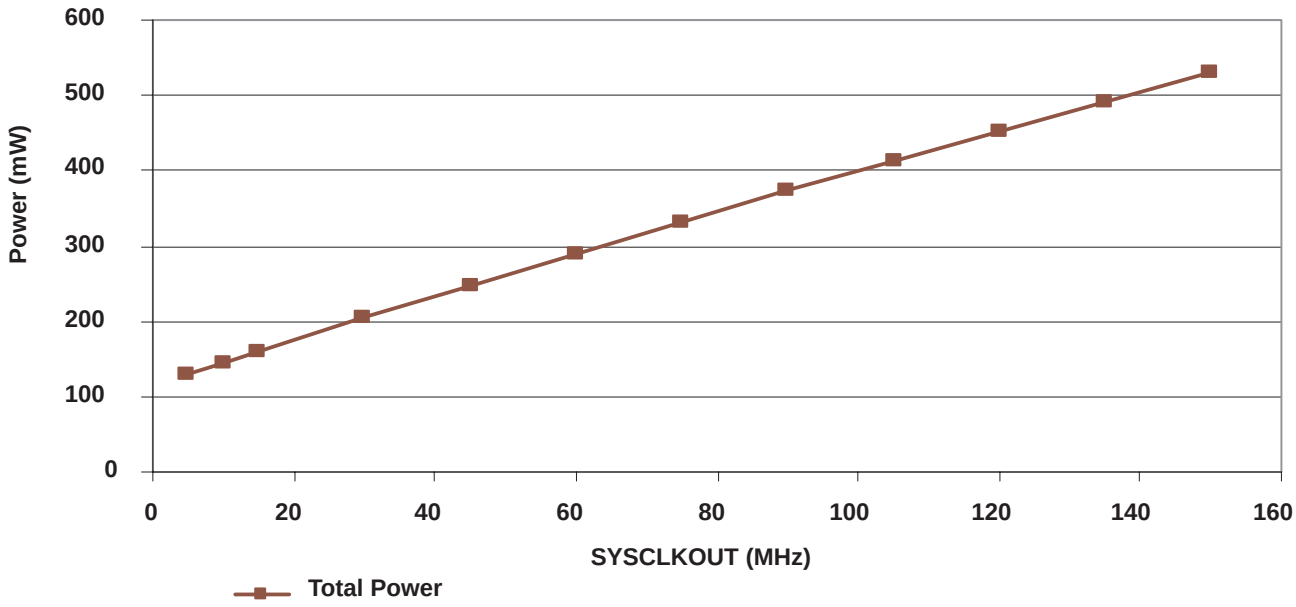

Figure 6−2. Typical Power Consumption Over Frequency

6.6 Reducing Current Consumption

28x DSPs incorporate a unique method to reduce the device current consumption. A reduction in current consumption can be achieved by turning off the clock to any peripheral module which is not used in a given application. Table 6−1 indicates the typical reduction in current consumption achieved by turning off the clocks to various peripherals.

Table 6−1. Typical Current Consumption by Various Peripherals (at 150 MHz)†

PERIPHERAL MODULE	I_{DD} CURRENT REDUCTION (mA)
eCAN	12
EVA	6
EVB	6
ADC	8‡
SCI	4
SPI	5
McBSP	13

† ***All peripheral clocks are disabled upon reset. Writing to/reading from peripheral registers is possible only after the peripheral clocks are turned on.***

‡ This number represents the current drawn by the digital portion of the ADC module. Turning off the clock to the ADC module results in the elimination of the current drawn by the analog portion of the ADC (I_{DDA}) as well.

6.7 Power Sequencing Requirements

Power sequencing is not required on the R281x devices. In other words, 3.3-V and 1.8-V (or 1.9-V) can ramp together. R281x can also be used on boards that have F281x power sequencing implemented; however, if the 1.8-V (or 1.9-V) rail lags the 3.3-V rail, the GPIO pins are undefined until the 1.8-V rail reaches at least 1 V.

6.8 Signal Transition Levels

Some of the signals use different reference voltages, see the recommended operating conditions table. Output levels are driven to a minimum logic-high level of 2.4 V and to a maximum logic-low level of 0.4 V.

Figure 6−3 shows output levels.

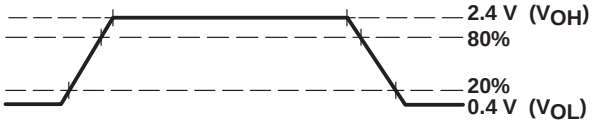

Figure 6−3. Output Levels

Output transition times are specified as follows:

- For a *high-to-low transition*, the level at which the output is said to be no longer high is below 80% of the total voltage range and lower and the level at which the output is said to be low is 20% of the total voltage range and lower.
- For a *low-to-high transition*, the level at which the output is said to be no longer low is 20% of the total voltage range and higher and the level at which the output is said to be high is 80% of the total voltage range and higher.

Figure 6−4 shows the input levels.

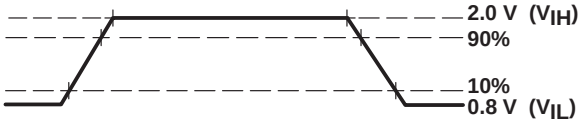

Figure 6−4. Input Levels

Input transition times are specified as follows:

- For a *high-to-low transition* on an input signal, the level at which the input is said to be no longer high is 90% of the total voltage range and lower and the level at which the input is said to be low is 10% of the total voltage range and lower.
- For a *low-to-high transition* on an input signal, the level at which the input is said to be no longer low is 10% of the total voltage range and higher and the level at which the input is said to be high is 90% of the total voltage range and higher.

NOTE: See the individual timing diagrams for levels used for testing timing parameters.

6.9 Timing Parameter Symbology

Timing parameter symbols used are created in accordance with JEDEC Standard 100. To shorten the symbols, some of the pin names and other related terminology have been abbreviated as follows:

Lowercase subscripts and their meanings:	
a	access time
c	cycle time (period)
d	delay time
f	fall time
h	hold time
r	rise time
su	setup time
t	transition time
v	valid time
w	pulse duration (width)

Letters and symbols and their meanings:	
H	High
L	Low
V	Valid
X	Unknown, changing, or don't care level
Z	High impedance

6.10 General Notes on Timing Parameters

All output signals from the 28x devices (including XCLKOUT) are derived from an internal clock such that all output transitions for a given half-cycle occur with a minimum of skewing relative to each other.

The signal combinations shown in the following timing diagrams may not necessarily represent actual cycles. For actual cycle examples, see the appropriate cycle description section of this document.

6.11 Test Load Circuit

This test load circuit is used to measure all switching characteristics provided in this document.

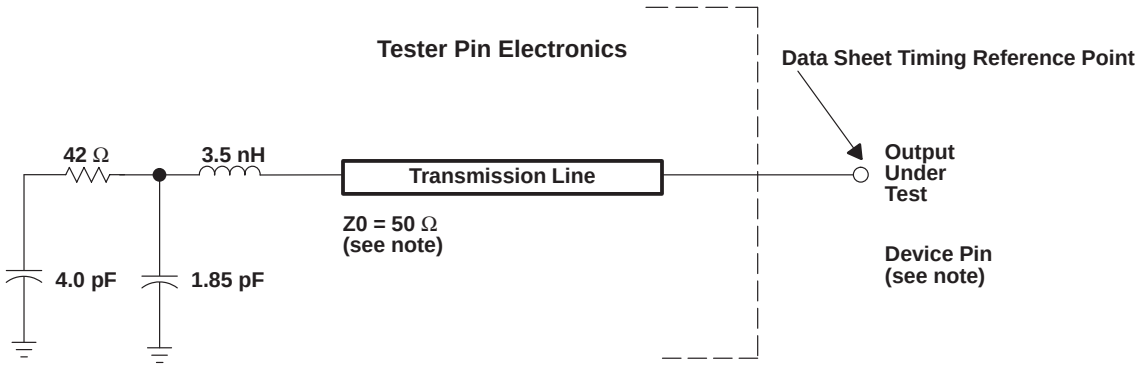

NOTE: The data sheet provides timing at the device pin. For output timing analysis, the tester pin electronics and its transmission line effects must be taken into account. A transmission line with a delay of 2 ns or longer can be used to produce the desired transmission line effect. The transmission line is intended as a load only. It is not necessary to add or subtract the transmission line delay (2 ns or longer) from the data sheet timing.

Input requirements in this data sheet are tested with an input slew rate of < 4 Volts per nanosecond (4 V/ns) at the device pin.

Figure 6−5. 3.3-V Test Load Circuit

6.12 Device Clock Table

This section provides the timing requirements and switching characteristics for the various clock options available on R281x DSPs. Table 6−2 lists the cycle times of various clocks.

Table 6−2. TMS320R281x Clock Table and Nomenclature

		MIN	NOM	MAX	UNIT
On-chip oscillator clock	$t_{c(OSC)}$, Cycle time	28.6		50	ns
	Frequency	20		35	MHz
XCLKIN	$t_{c(CI)}$, Cycle time	6.67		250	ns
	Frequency	4		150	MHz
SYSCLKOUT	$t_{c(SCO)}$, Cycle time	6.67		500	ns
	Frequency	2		150	MHz
XCLKOUT	$t_{c(XCO)}$, Cycle time	6.67		2000	ns
	Frequency	0.5		150	MHz
HSPCLK	$t_{c(HCO)}$, Cycle time	6.67	13.3‡		ns
	Frequency		75‡	150	MHz
LSPCLK	$t_{c(LCO)}$, Cycle time	13.3	26.6‡		ns
	Frequency		37.5‡	75	MHz
ADC clock	$t_{c(ADCCLK)}$, Cycle time†	40			ns
	Frequency			25	MHz
SPI clock	$t_{c(SPC)}$, Cycle time	50			ns
	Frequency			20	MHz
McBSP	$t_{c(CKG)}$, Cycle time	50			ns
	Frequency			20	MHz
XTIMCLK	$t_{c(XTIM)}$, Cycle time	6.67			ns
	Frequency			150	MHz

† The maximum value for ADCCLK frequency is 25 MHz. For SYSCLKOUT values of 25 MHz or lower, ADCCLK has to be SYSCLKOUT/2 or lower. ADCCLK = SYSCLKOUT is not a valid mode for any value of SYSCLKOUT.
‡ This is the default reset value if SYSCLKOUT = 150 MHz.

6.13 Clock Requirements and Characteristics

6.13.1 Input Clock Requirements

The clock provided at the XCLKIN pin generates the internal CPU clock cycle.

Table 6−3. Input Clock Frequency

PARAMETER				MIN	TYP	MAX	UNIT
f_X	Input clock frequency	Resonator		20		35	MHz
		Crystal		20		35	
		XCLKIN	Without PLL	4		150	
			With PLL	5		100	
f_l	Limp mode clock frequency				2		MHz

Table 6−4. XCLKIN Timing Requirements − PLL Bypassed or Enabled

NO.				MIN	MAX	UNIT
C8	$t_{c(CI)}$	Cycle time, XCLKIN		6.67	250	ns
C9	$t_{f(CI)}$	Fall time, XCLKIN	Up to 30 MHz		6	ns
			30 MHz to 150 MHz		2	
C10	$t_{r(CI)}$	Rise time, XCLKIN	Up to 30 MHz		6	ns
			30 MHz to 150 MHz		2	
C11	$t_{w(CIL)}$	Pulse duration, X1/XCLKIN low as a percentage of $t_{c(CI)}$		40	60	%
C12	$t_{w(CIH)}$	Pulse duration, X1/XCLKIN high as a percentage of $t_{c(CI)}$		40	60	%

Table 6−5. XCLKIN Timing Requirements − PLL Disabled

NO.				MIN	MAX	UNIT
C8	$t_{c(CI)}$	Cycle time, XCLKIN		6.67	250	ns
C9	$t_{f(CI)}$	Fall time, XCLKIN	Up to 30 MHz		6	ns
			30 MHz to 150 MHz		2	
C10	$t_{r(CI)}$	Rise time, XCLKIN	Up to 30 MHz		6	ns
			30 MHz to 150 MHz		2	
C11	$t_{w(CIL)}$	Pulse duration, X1/XCLKIN low as a percentage of $t_{c(CI)}$	XCLKIN ≤ 120 MHz	40	60	%
			120 < XCLKIN ≤ 150 MHz	45	55	
C12	$t_{w(CIH)}$	Pulse duration, X1/XCLKIN high as a percentage of $t_{c(CI)}$	XCLKIN ≤ 120 MHz	40	60	%
			120 < XCLKIN ≤ 150 MHz	45	55	

Table 6−6. Possible PLL Configuration Modes

PLL MODE	REMARKS	SYSCLKOUT
PLL Disabled	Invoked by tying $\overline{\text{XPLLDIS}}$ pin low upon reset. PLL block is completely disabled. Clock input to the CPU (CLKIN) is directly derived from the clock signal present at the X1/XCLKIN pin.	XCLKIN
PLL Bypassed	Default PLL configuration upon power-up, if PLL is not disabled. The PLL itself is bypassed. However, the /2 module in the PLL block divides the clock input at the X1/XCLKIN pin by two before feeding it to the CPU.	XCLKIN/2
PLL Enabled	Achieved by writing a non-zero value “n” into PLLCR register. The /2 module in the PLL block now divides the output of the PLL by two before feeding it to the CPU.	(XCLKIN * n) / 2

6.13.2 Output Clock Characteristics

Table 6−7. XCLKOUT Switching Characteristics (PLL Bypassed or Enabled)†‡

No.	PARAMETER		MIN	TYP	MAX	UNIT
C1	$t_{c(XCO)}$	Cycle time, XCLKOUT	6.67§			ns
C3	$t_{f(XCO)}$	Fall time, XCLKOUT		2		ns
C4	$t_{r(XCO)}$	Rise time, XCLKOUT		2		ns
C5	$t_{w(XCOL)}$	Pulse duration, XCLKOUT low	H−2		H+2	ns
C6	$t_{w(XCOH)}$	Pulse duration, XCLKOUT high	H−2		H+2	ns
C7	t_p	PLL lock time			$131072t_{c(CI)}$	ns

† A load of 40 pF is assumed for these parameters.
‡ $H = 0.5t_{c(XCO)}$
§ The PLL must be used for maximum frequency operation.

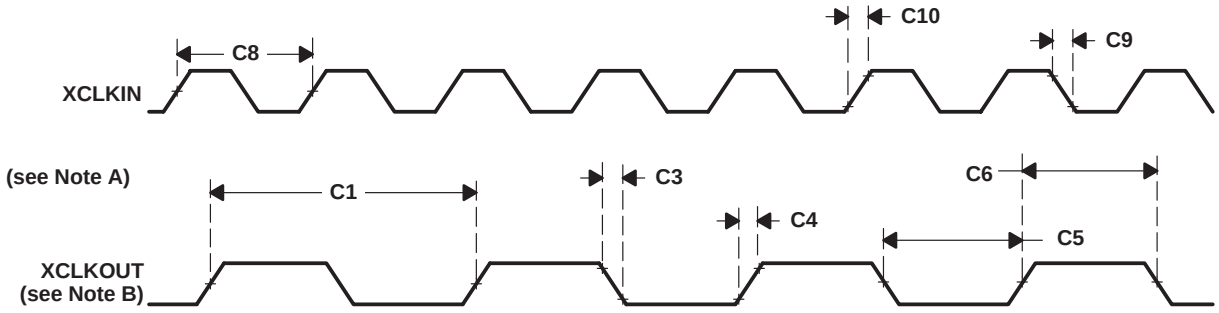

NOTES: A. The relationship of XCLKIN to XCLKOUT depends on the divide factor chosen. The waveform relationship shown in Figure 6−6 is intended to illustrate the timing parameters only and may differ based on configuration.
B. XCLKOUT configured to reflect SYSCLKOUT.

Figure 6−6. Clock Timing

6.14 Reset Timing

Table 6−8. Reset ($\overline{XRS}$) Timing Requirements†

			MIN	NOM	MAX	UNIT
$t_{w(RSL1)}$	Pulse duration, stable XCLKIN to $\overline{XRS}$ high		$8t_{c(CI)}$			cycles
$t_{w(RSL2)}$	Pulse duration, $\overline{XRS}$ low	Warm reset	$8t_{c(CI)}$			cycles
		WD-initiated reset		$512t_{c(CI)}$		
$t_{w(WDRS)}$	Pulse duration, reset pulse generated by watchdog			$512t_{c(CI)}$		cycles
$t_{d(EX)}$	Delay time, address/data valid after $\overline{XRS}$ high			$32t_{c(CI)}$		cycles
t_{OSCST}‡	Oscillator start-up time		1	10		ms
$t_{su(XPLLDIS)}$	Setup time for $\overline{XPLLDIS}$ pin		$16t_{c(CI)}$			cycles
$t_{h(XPLLDIS)}$	Hold time for $\overline{XPLLDIS}$ pin		$16t_{c(CI)}$			cycles
$t_{h(XMP/MC)}$	Hold time for XMP/$\overline{MC}$ pin		$16t_{c(CI)}$			cycles
$t_{h(boot-mode)}$	Hold time for boot-mode pins		$2520t_{c(CI)}$§			cycles

† If external oscillator/clock source are used, reset time has to be low at least for 1 ms after V_{DD} reaches 1.5 V.
‡ Dependent on crystal/resonator and board design.

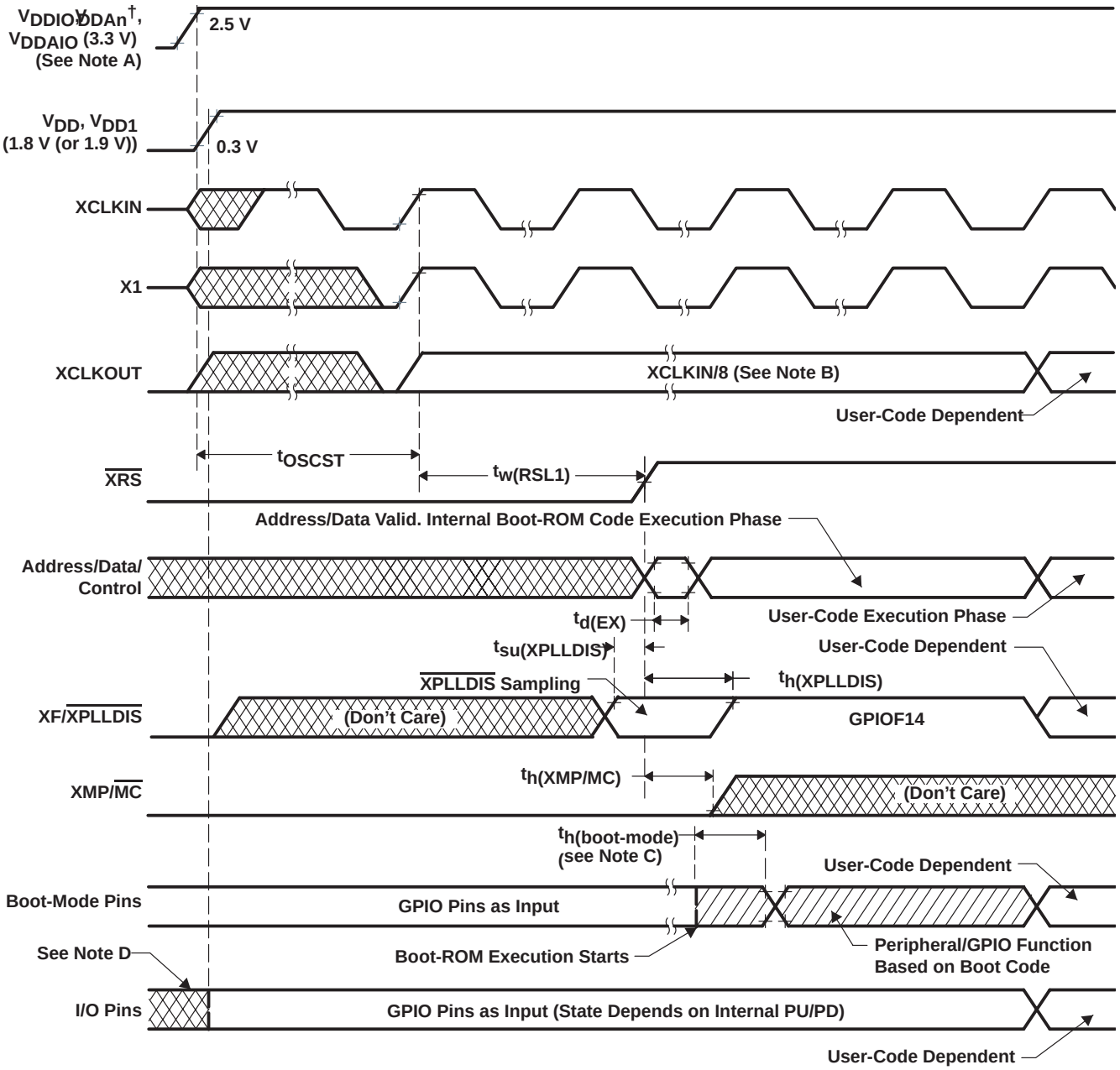

NOTES: A. V_{DDAn} – V_{DDA1}/V_{DDA2} and $AV_{DDREFBG}$

B. Upon power up, SYSCLKOUT is XCLKIN/2 if the PLL is enabled. Since both the XTIMCLK and CLKMODE bits in the XINTCNF2 register come up with a reset state of 1, SYSCLKOUT is further divided by 4 before it appears at XCLKOUT. This explains why XCLKOUT = XCLKIN/8 during this phase.

C. After reset, the Boot ROM code executes instructions for 1260 SYSCLKOUT cycles (SYSCLKOUT = XCLKIN/2) and then samples BOOT Mode pins. Based on the status of the Boot Mode pin, the boot code branches to destination memory or boot code function in ROM. The BOOT Mode pins should be held high/low for at least 2520 XCLKIN cycles from boot ROM execution time for proper selection of Boot modes.
If Boot ROM code executes after power-on conditions (in debugger environment), the Boot code execution time is based on the current SYSCLKOUT speed. The SYSCLKOUT will be based on user environment and could be with or without PLL enabled.

D. The state of the GPIO pins is undefined (i.e., they could be input or output) until the 1.8-V (or 1.9-V) supply reaches at least 1 V and 3.3-V supply reaches 2.5 V.

Figure 6−7. Power-on Reset in Microcomputer Mode (XMP/$\overline{MC}$ = 0)

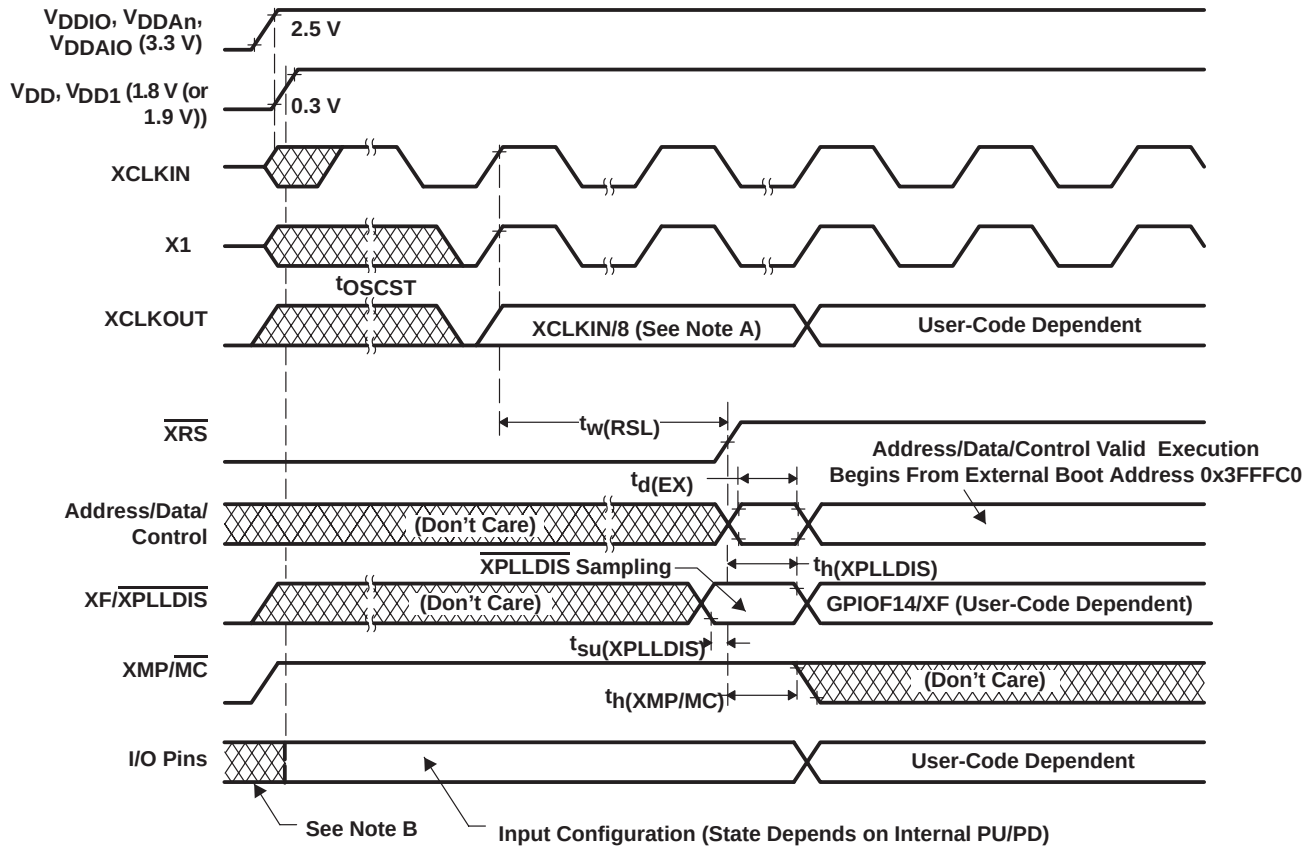

NOTES: A. Upon power up, SYSCLKOUT is XCLKIN/2 if the PLL is enabled. Since both the XTIMCLK and CLKMODE bits in the XINTCNF2 register come up with a reset state of 1, SYSCLKOUT is further divided by 4 before it appears at XCLKOUT. This explains why XCLKOUT = XCLKIN/8 during this phase.

B. The state of the GPIO pins is undefined (i.e., they could be input or output) until the 1.8-V (or 1.9-V) supply reaches at least 1 V and 3.3-V supply reaches 2.5 V..

Figure 6−8. Power-on Reset in Microprocessor Mode (XMP/$\overline{MC}$ = 1)

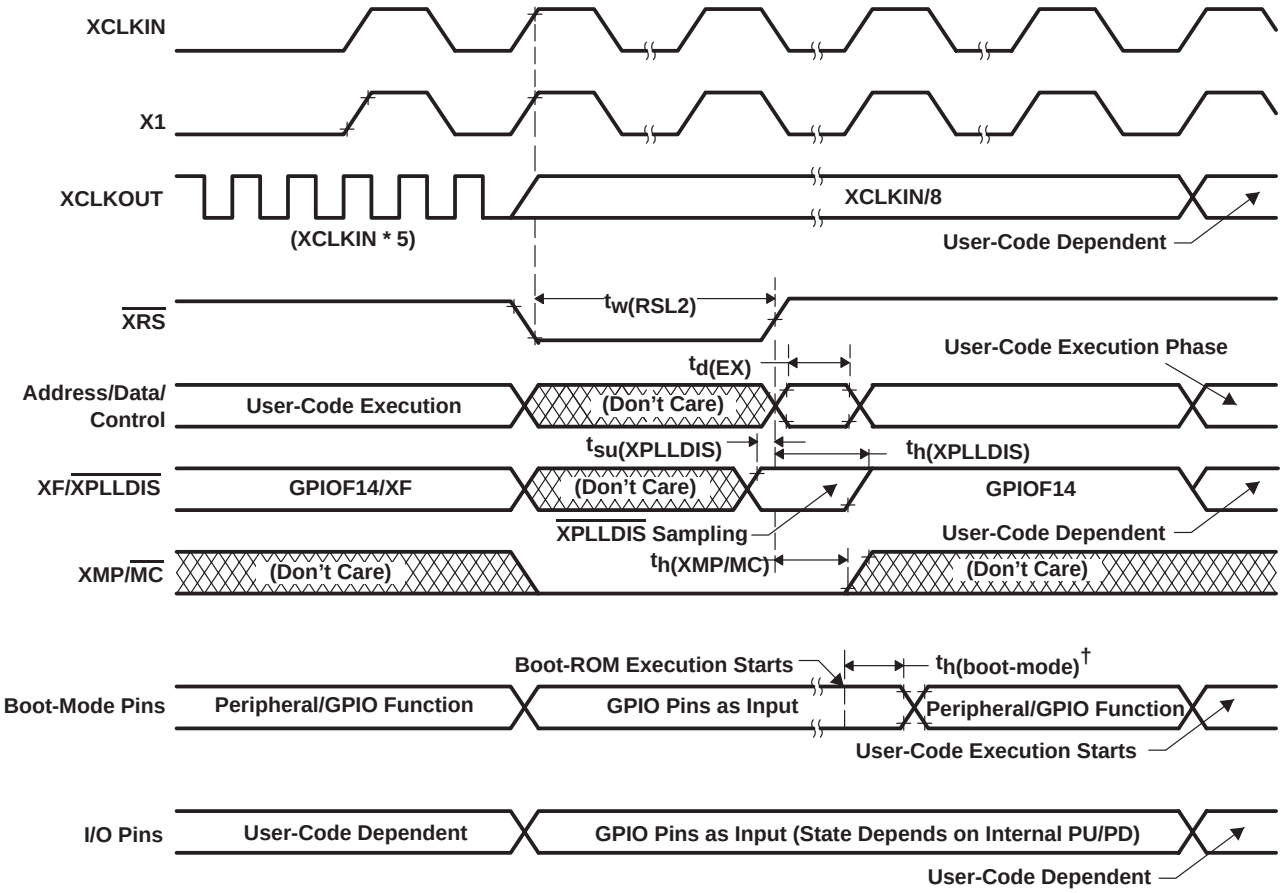

† After reset, the Boot ROM code executes instructions for 1260 SYSCLKOUT cycles (SYSCLKOUT = XCLKIN/2) and then samples BOOT Mode pins. Based on the status of the Boot Mode pin, the boot code branches to destination memory or boot code function in ROM. The BOOT Mode pins should be held high/low for at least 2520 XCLKIN cycles from boot ROM execution time for proper selection of Boot modes.
If Boot ROM code executes after power-on conditions (in debugger environment), the Boot code execution time is based on the current SYSCLKOUT speed. The SYSCLKOUT will be based on user environment and could be with or without PLL enabled.

Figure 6−9. Warm Reset in Microcomputer Mode

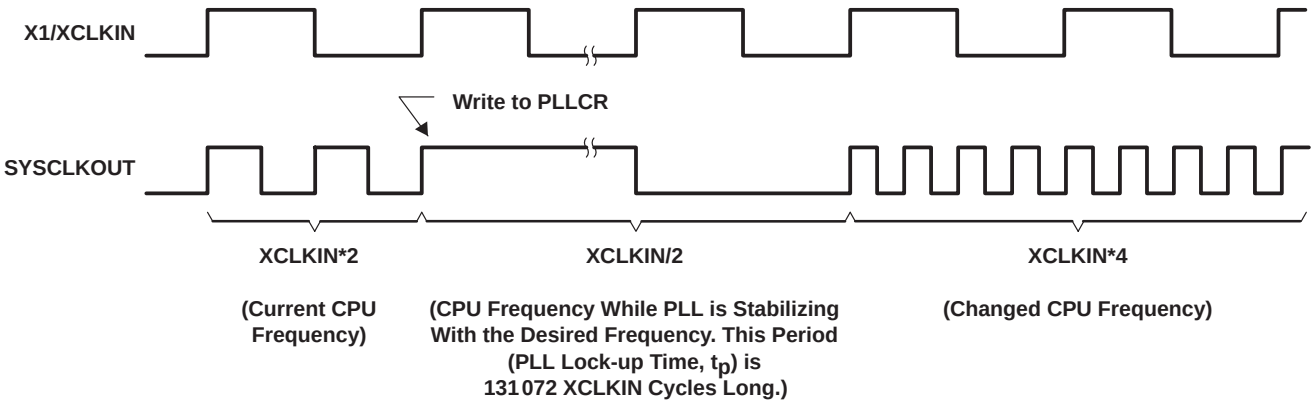

Figure 6−10. Effect of Writing Into PLLCR Register

6.15 Low-Power Mode Wakeup Timing

Table 6−9. IDLE Mode Timing Requirements

PARAMETER		TEST CONDITIONS	MIN	TYP	MAX	UNIT
$t_{w(WAKE-INT)}$	Pulse duration, external wake-up signal	Without input qualifier	$2 * t_{c(SCO)}$			Cycles
		With input qualifier	$1 * t_{c(SCO)}$ + IQT†			Cycles

† Input Qualification Time (IQT) = $[t_{c(SCO)} \times 2 \times \text{QUALPRD}] \times 5 + [t_{c(SCO)} \times 2 \times \text{QUALPRD}]$.

Table 6−10. IDLE Mode Switching Characteristics

PARAMETER		TEST CONDITIONS	MIN	TYP	MAX	UNIT
$t_{d(WAKE-IDLE)}$	Delay time, external wake signal to program execution resume‡					
	− Wake-up from SARAM	Without input qualifier			$8 * t_{c(SCO)}$	Cycles
	− Wake-up from SARAM	With input qualifier			$8 * t_{c(SCO)}$ + IQT†	Cycles

† Input Qualification Time (IQT) = $[t_{c(SCO)} \times 2 \times \text{QUALPRD}] \times 5 + [t_{c(SCO)} \times 2 \times \text{QUALPRD}]$.
‡ This is the time taken to begin execution of the instruction that immediately follows the IDLE instruction. Execution of an ISR (triggered by the wake-up) signal involves additional latency.

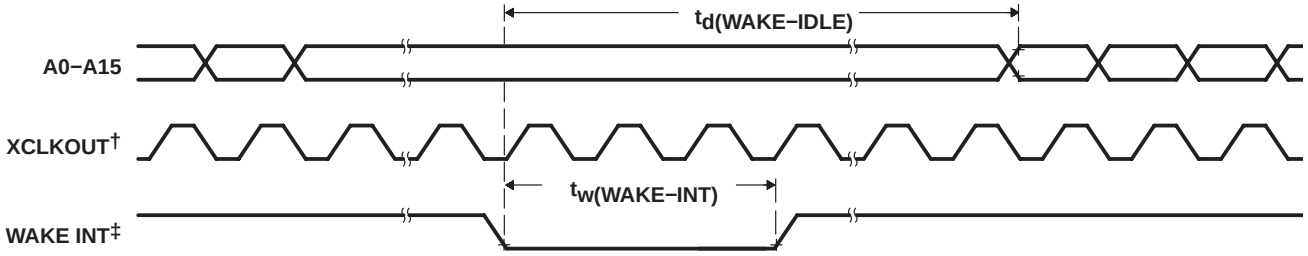

† XCLKOUT = SYSCLKOUT
‡ WAKE INT can be any enabled interrupt, $\overline{\text{WDINT}}$, XNMI, or $\overline{\text{XRS}}$.

Figure 6−11. IDLE Entry and Exit Timing

Table 6−11. STANDBY Mode Timing Requirements

PARAMETER		TEST CONDITIONS	MIN	TYP	MAX	UNIT
$t_{w(WAKE-INT)}$	Pulse duration, external wake-up signal	Without input qualifier	$12 * t_{c(CI)}$			Cycles
		With input qualifier	(2 + QUALSTDBY)† * $t_{c(CI)}$			Cycles

† QUALSTDBY is a 6-bit field in the LPMCR0 register.

Table 6−12. STANDBY Mode Switching Characteristics

PARAMETER		TEST CONDITIONS	MIN	TYP	MAX	UNIT
$t_{d(IDLE-XCOH)}$	Delay time, IDLE instruction executed to XCLKOUT high		$32 * t_{c(SCO)}$	$45 * t_{c(SCO)}$		Cycles
$t_{d(WAKE-STBY)}$	Delay time, external wake signal to program execution resume‡					
	− Wake-up from SARAM	Without input qualifier			$12 * t_{c(CI)}$	Cycles
	− Wake-up from SARAM	With input qualifier			$12 * t_{c(CI)} + t_{w(WAKE-INT)}$	Cycles

† QUALSTDBY is a 6-bit field in the LPMCR0 register.
‡ This is the time taken to begin execution of the instruction that immediately follows the IDLE instruction. Execution of an ISR (triggered by the wake-up) signal involves additional latency.

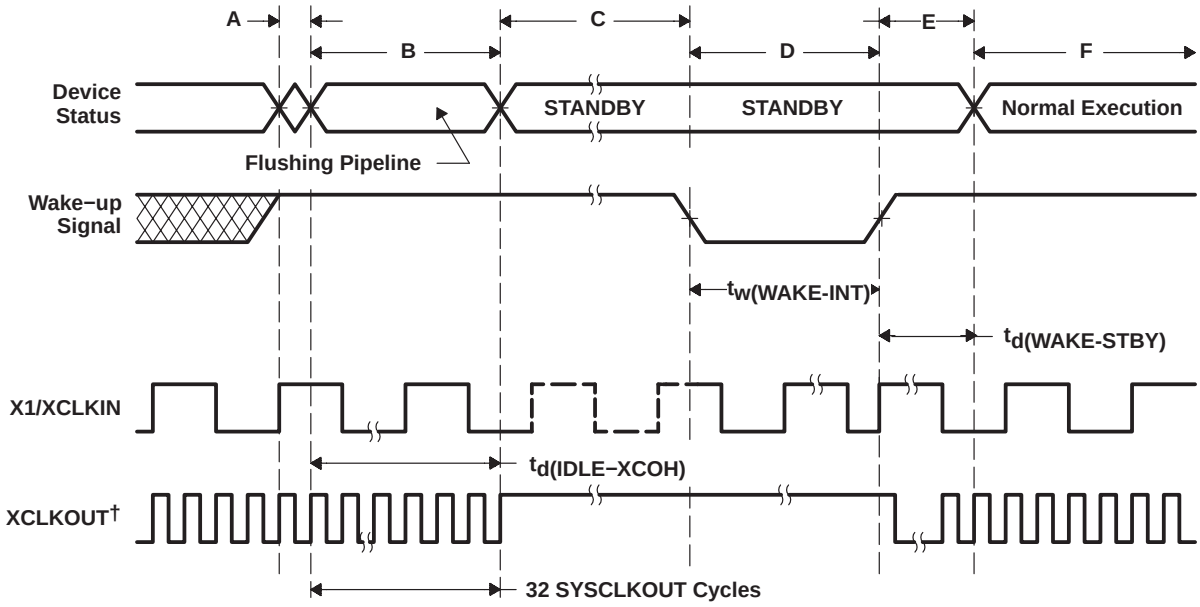

NOTES: A. IDLE instruction is executed to put the device into STANDBY mode.
B. The PLL block responds to the STANDBY signal. SYSCLKOUT is held for approximately 32 cycles before being turned off. This 32−cycle delay enables the CPU pipe and any other pending operations to flush properly.
C. The device is now in STANDBY mode.
D. The external wake−up signal is driven active (negative edge triggered shown as an example).
E. After a latency period, the STANDBY mode is exited.
F. Normal operation resumes. The device will respond to the interrupt (if enabled).

Figure 6−12. STANDBY Entry and Exit Timing

Table 6−13. HALT Mode Timing Requirements

PARAMETER		MIN	TYP	MAX	UNIT
$t_{w(WAKE-XNMI)}$	Pulse duration, XNMI wakeup signal	2 * $t_{c(CI)}$			Cycles
$t_{w(WAKE-XRS)}$	Pulse duration, $\overline{XRS}$ wakeup signal	8 * $t_{c(CI)}$			Cycles

Table 6−14. HALT Mode Switching Characteristics

PARAMETER		MIN	TYP	MAX	UNIT
$t_{d(IDLE-XCOH)}$	Delay time, IDLE instruction executed to XCLKOUT high	32 * $t_{c(SCO)}$	45*$t_{c(SCO)}$		Cycles
t_p	PLL lock-up time			131072 * $t_{c(CI)}$	Cycles
$t_{d(wake)}$	Delay time, PLL lock to program execution resume				
	− Wake-up from SARAM			35*tc(SCO)	Cycles

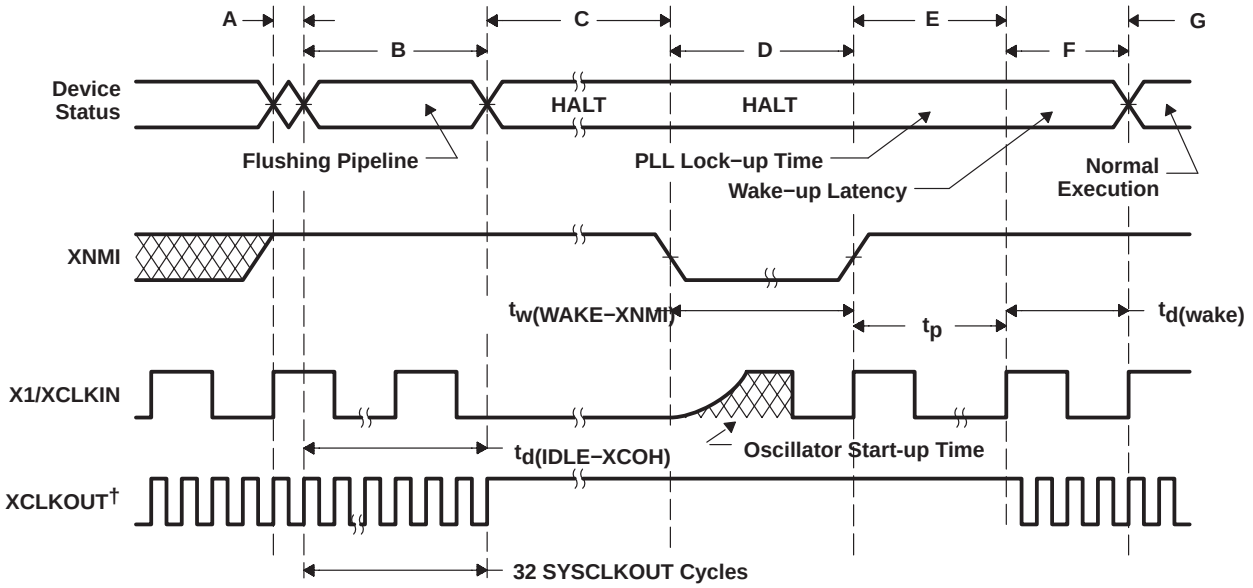

† XCLKOUT = SYSCLKOUT

NOTES: A. IDLE instruction is executed to put the device into HALT mode.

B. The PLL block responds to the HALT signal. SYSCLKOUT is held for another 32 cycles before the oscillator is turned off and the CLKIN to the core is stopped. This 32-cycle delay enables the CPU pipe and any other pending operations to flush properly.

C. Clocks to the peripherals are turned off and the internal oscillator and PLL are shut down. The device is now in HALT mode and consumes absolute minimum power.

D. When XNMI is driven active, the oscillator is turned on; but the PLL is not activated. The pulse duration of $2t_{c(CI)}$ is applicable when an external oscillator is used. If the internal oscillator is used, the oscillator wake-up time should be added to this parameter.

E. When XNMI is deactivated, it initiates the PLL lock sequence, which takes 131,072 X1/XCLKIN cycles.

F. When CLKIN to the core is enabled, the device will respond to the interrupt (if enabled), after a latency. The HALT mode is now exited.

G. Normal operation resumes.

Figure 6−13. HALT Wakeup Using XNMI

6.16 Event Manager Interface

6.16.1 PWM Timing

PWM refers to all PWM outputs on EVA and EVB.

Table 6−15. PWM Switching Characteristics†‡

PARAMETER		TEST CONDITIONS	MIN	MAX	UNIT
$t_{w(PWM)}$§	Pulse duration, PWMx output high/low		25		ns
$t_{d(PWM)XCO}$	Delay time, XCLKOUT high to PWMx output switching	XCLKOUT = SYSCLKOUT/4		10	ns

† See the GPIO output timing for fall/rise times for PWM pins.
‡ PWM pin toggling frequency is limited by the GPIO output buffer switching frequency (20 MHz).
§ PWM outputs may be 100%, 0%, or increments of $t_{c(HCO)}$ with respect to the PWM period.

Table 6−16. Timer and Capture Unit Timing Requirements¶#

			MIN	MAX	UNIT
$t_{w(TDIR)}$	Pulse duration, TDIRx low/high	Without input qualifier	$2 * t_{c(SCO)}$		cycles
		With input qualifier	$1 * t_{c(SCO)}$ + IQT‖		
$t_{w(CAP)}$	Pulse duration, CAPx input low/high	Without input qualifier	$2 * t_{c(SCO)}$		cycles
		With input qualifier	$1 * t_{c(SCO)}$ + IQT‖		
$t_{w(TCLKINL)}$	Pulse duration, TCLKINx low as a percentage of TCLKINx cycle time		40	60	%
$t_{w(TCLKINH)}$	Pulse duration, TCLKINx high as a percentage of TCLKINx cycle time		40	60	%
$t_{c(TCLKIN)}$	Cycle time, TCLKINx		$4 * t_{c(HCO)}$		ns

¶ The QUALPRD bit field value can range from 0 (no qualification) through 0xFF (510 SYSCLKOUT cycles). The qualification sampling period is 2n SYSCLKOUT cycles, where “n” is the value stored in the QUALPRD bit field. As an example, when QUALPRD = 1, the qualification sampling period is 1 x 2 = 2 SYSCLKOUT cycles (i.e., the input is sampled every 2 SYSCLKOUT cycles). Six such samples will be taken over five sampling windows, each window being 2n SYSCLKOUT cycles. For QUALPRD = 1, the minimum width that is needed is 5 x 2 = 10 SYSCLKOUT cycles. However, since the external signal is driven asynchronously, a 11-SYSCLKOUT-wide pulse ensures reliable recognition.
# Maximum input frequency to the QEP = min[HSPCLK/2, 20 MHz]
‖ Input Qualification Time (IQT) = $[t_{c(SCO)} \times 2 \times \text{QUALPRD}] \times 5 + [t_{c(SCO)} \times 2 \times \text{QUALPRD}]$.

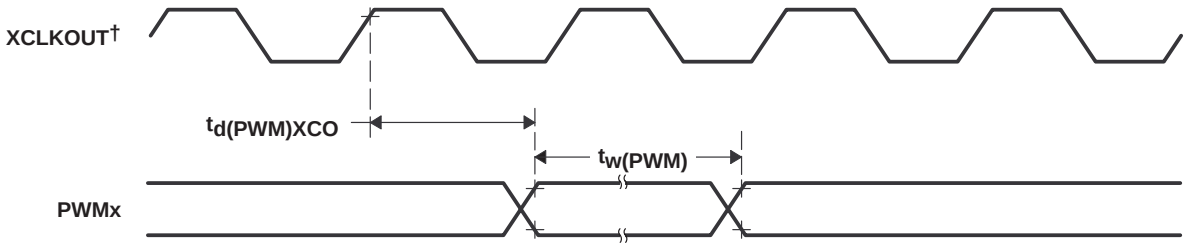

† XCLKOUT = SYSCLKOUT

Figure 6−14. PWM Output Timing

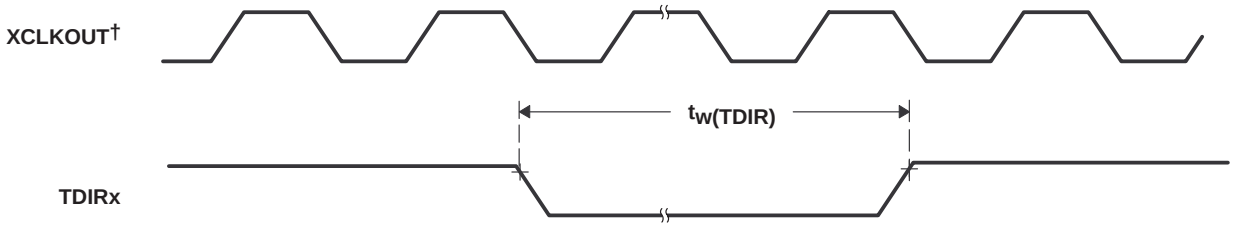

† XCLKOUT = SYSCLKOUT

Figure 6−15. TDIRx Timing

Table 6−17. External ADC Start-of-Conversion − EVA − Switching Characteristics†

PARAMETER		MIN	MAX	UNIT
$t_{d(XCOH-EVASOCL)}$	Delay time, XCLKOUT high to $\overline{EVASOC}$ low		1 * $t_{c(SCO)}$	cycle
$t_{w(EVASOCL)}$	Pulse duration, $\overline{EVASOC}$ low	32 * $t_{c(HCO)}$		ns

† XCLKOUT = SYSCLKOUT

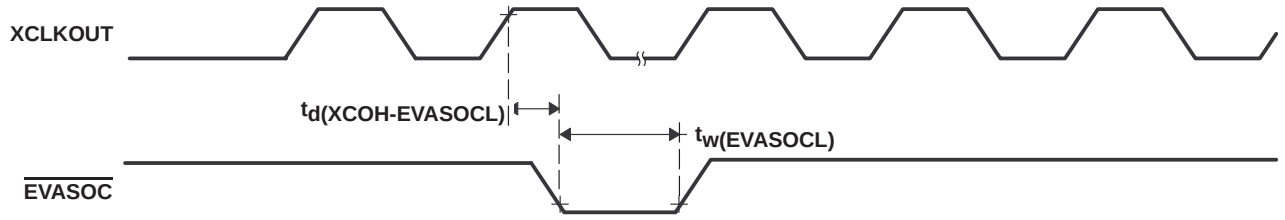

Figure 6−16. $\overline{EVASOC}$ Timing

Table 6−18. External ADC Start-of-Conversion − EVB − Switching Characteristics†

PARAMETER		MIN	MAX	UNIT
$t_{d(XCOH-EVBSOCL)}$	Delay time, XCLKOUT high to $\overline{EVBSOC}$ low		1 * $t_{c(SCO)}$	cycle
$t_{w(EVBSOCL)}$	Pulse duration, $\overline{EVBSOC}$ low	32 * $t_{c(HCO)}$		ns

† XCLKOUT = SYSCLKOUT

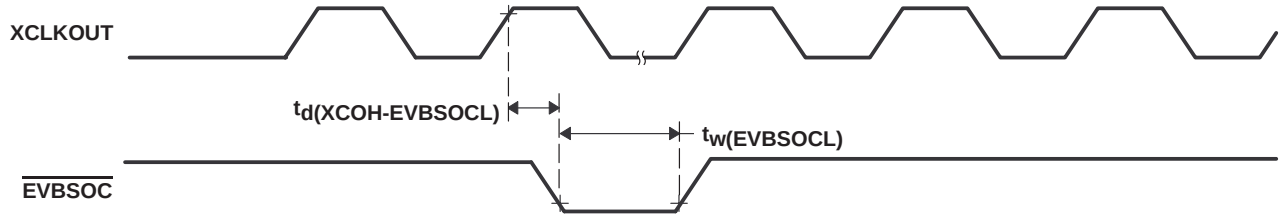

Figure 6−17. $\overline{EVBSOC}$ Timing

6.16.2 Interrupt Timing

Table 6−19. Interrupt Switching Characteristics

PARAMETER			MIN	MAX	UNIT
$t_{d(PDP-PWM)HZ}$	Delay time, $\overline{PDPINTx}$ low to PWM high-impedance state	Without input qualifier		12	ns
		With input qualifier		$1 * t_{c(SCO)} + IQT^{\dagger} + 12$	
$t_{d(TRIP-PWM)HZ}$	Delay time, $\overline{CxTRIP}$/$\overline{TxCTRIP}$ signals low to PWM high-impedance state	Without input qualifier		$3 * t_{c(SCO)}$	ns
		With input qualifier		$[2 * t_{c(SCO)}] + IQT^{\dagger}$	
$t_{d(INT)}$	Delay time, INT low/high to interrupt-vector fetch		$IQT + 12\ t_{c(SCO)}$		ns

† Input Qualification Time (IQT) = $[t_{c(SCO)} \times 2 \times QUALPRD] \times 5 + [t_{c(SCO)} \times 2 \times QUALPRD]$.

Table 6−20. Interrupt Timing Requirements

			MIN MAX	UNIT
$t_{w(INT)}$	Pulse duration, INT input low/high	with no qualifier	$2 * t_{c(SCO)}$	cycles
		with qualifier	$1 * t_{c(SCO)} + IQT^{\dagger}$	
$t_{w(PDP)}$	Pulse duration, $\overline{PDPINTx}$ input low	with no qualifier	$2 * t_{c(SCO)}$	cycles
		with qualifier	$1 * t_{c(SCO)} + IQT^{\dagger}$	
$t_{w(CxTRIP)}$	Pulse duration, $\overline{CxTRIP}$ input low	with no qualifier	$2 * t_{c(SCO)}$	cycles
		with qualifier	$1 * t_{c(SCO)} + IQT^{\dagger}$	
$t_{w(TxCTRIP)}$	Pulse duration, $\overline{TxCTRIP}$ input low	with no qualifier	$2 * t_{c(SCO)}$	cycles
		with qualifier	$1 * t_{c(SCO)} + IQT^{\dagger}$	

† Input Qualification Time (IQT) = $[t_{c(SCO)} \times 2 \times QUALPRD] \times 5 + [t_{c(SCO)} \times 2 \times QUALPRD]$.

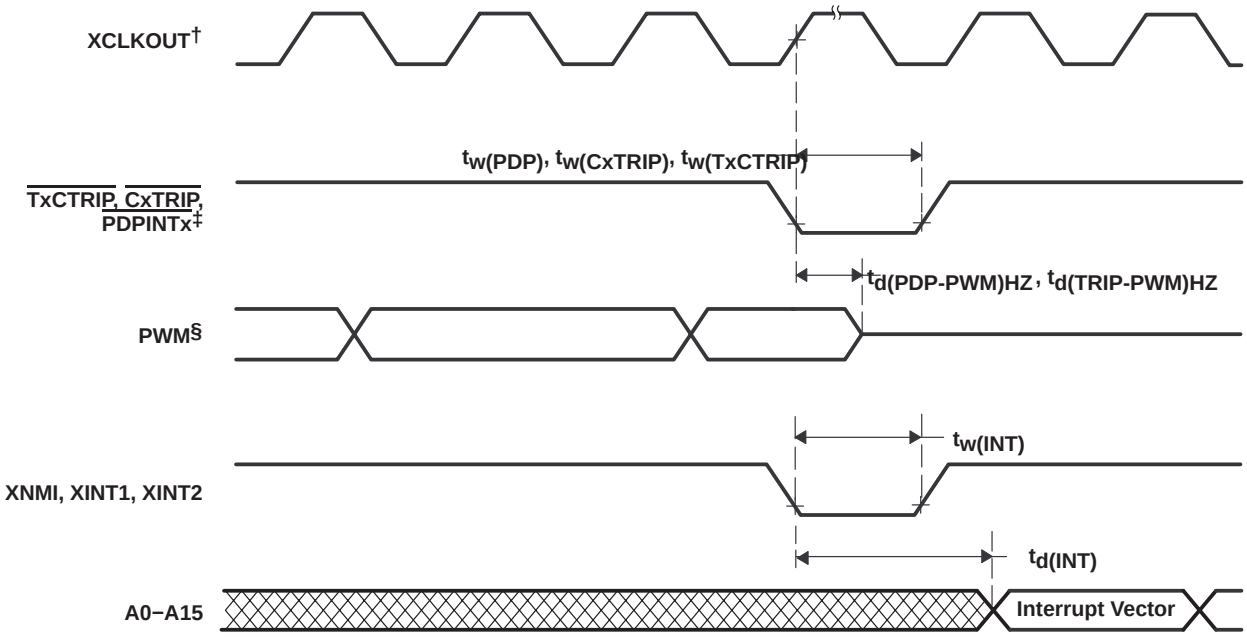

† XCLKOUT = SYSCLKOUT
‡ TxCTRIP − T1CTRIP, T2CTRIP, T3CTRIP, T4CTRIP
CxTRIP − C1TRIP, C2TRIP, C3TRIP, C4TRIP, C5TRIP, or C6TRIP
PDPINTx − PDPINTA or PDPINTB
§ PWM refers to **all** the PWM pins in the device (i.e., PWMn and TnPWM pins or PWM pin pair relevant to each CxTRIP pin). The state of the PWM pins after PDPINTx is taken high depends on the state of the FCOMPOE bit.

Figure 6−18. External Interrupt Timing

6.17 General-Purpose Input/Output (GPIO) − Output Timing

Table 6−21. General-Purpose Output Switching Characteristics

PARAMETER			MIN	MAX	UNIT
$t_{d(XCOH-GPO)}$	Delay time, XCLKOUT high to GPIO low/high	All GPIOs		1 * $t_{c(SCO)}$	cycle
$t_{r(GPO)}$	Rise time, GPIO switching low to high	All GPIOs		10	ns
$t_{f(GPO)}$	Fall time, GPIO switching high to low	All GPIOs		10	ns
f_{GPO}	Toggling frequency, GPO pins			20	MHz

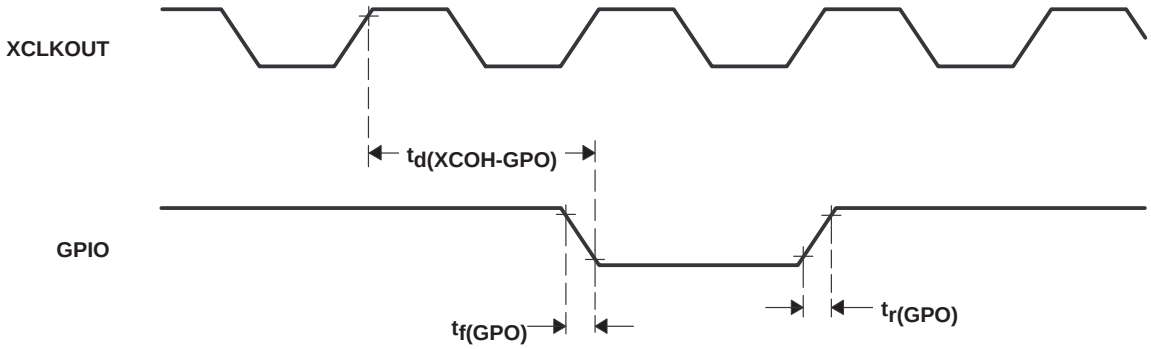

Figure 6−19. General-Purpose Output Timing

6.18 General-Purpose Input/Output (GPIO) − Input Timing

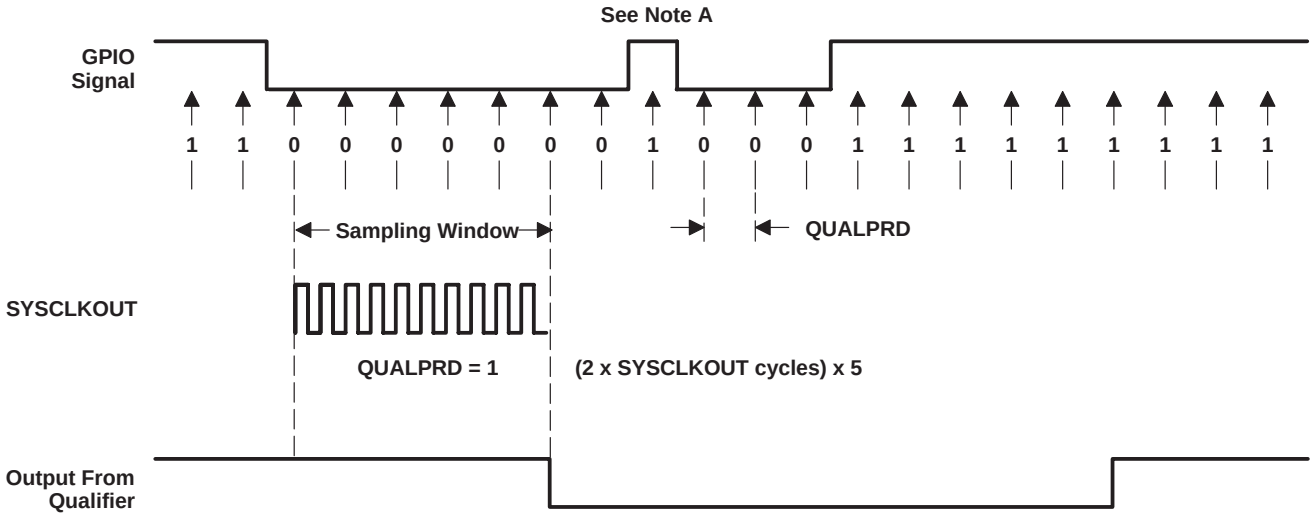

NOTES: A. This glitch will be ignored by the input qualifier. The QUALPRD bit field specifies the qualification sampling period. It can vary from 00 to 0xFF. Input qualification is not applicable when QUALPRD = 00. For any other value “n”, the qualification sampling period in 2n SYSCLKOUT cycles (i.e., at every 2n SYSCLKOUT cycle, the GPIO pin will be sampled). Six consecutive samples must be of the same value for a given input to be recognized.

B. For the qualifier to detect the change, the input should be stable for 10 SYSCLKOUT cycles or greater. In other words, the inputs should be stable for (5 x QUALPRD x 2) SYSCLKOUT cycles. This would ensure six sampling windows for detection to occur. Since external signals are driven asynchronously, an 11-SYSCLKOUT-wide pulse ensures reliable recognition.

Figure 6−20. GPIO Input Qualifier − Example Diagram for QUALPRD = 1

Table 6−22. General-Purpose Input Timing Requirements

				MIN MAX	UNIT
$t_{w(GPI)}$	Pulse duration, GPIO low/high	All GPIOs	With no qualifier	$2 * t_{c(SCO)}$	cycles
			With qualifier	$1 * t_{c(SCO)} + IQT^{\dagger}$	

† Input Qualification Time (IQT) = [5 x QUALPRD x 2] * $t_{c(SCO)}$

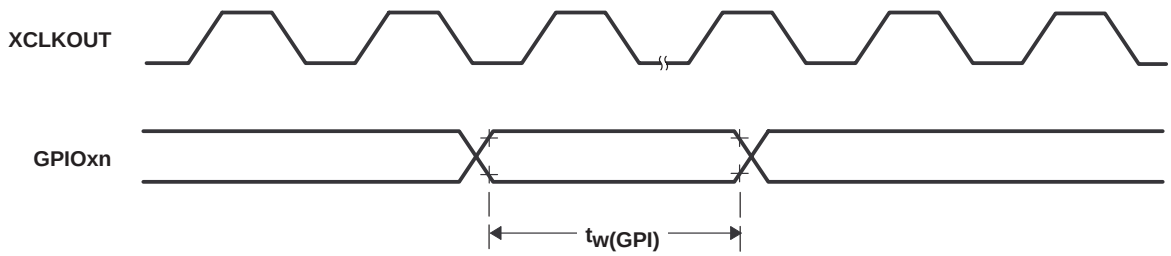

Figure 6−21. General-Purpose Input Timing

NOTE: The pulse width requirement for general-purpose input is applicable for the $\overline{\text{XBIO}}$ and ADCSOC pins as well.

6.19 SPI Master Mode Timing

Table 6−23. SPI Master Mode External Timing (Clock Phase = 0)†‡

NO.			SPI WHEN (SPIBRR + 1) IS EVEN OR SPIBRR = 0 OR 2		SPI WHEN (SPIBRR + 1) IS ODD AND SPIBRR > 3		UNIT
			MIN	MAX	MIN	MAX	
1	$t_{c(SPC)M}$	Cycle time, SPICLK	$4t_{c(LCO)}$	$128t_{c(LCO)}$	$5t_{c(LCO)}$	$127t_{c(LCO)}$	ns
2§	$t_{w(SPCH)M}$	Pulse duration, SPICLK high (clock polarity = 0)	$0.5t_{c(SPC)M}-10$	$0.5t_{c(SPC)M}$	$0.5t_{c(SPC)M}-0.5t_{c(LCO)}-10$	$0.5t_{c(SPC)M}-0.5t_{c(LCO)}$	ns
	$t_{w(SPCL)M}$	Pulse duration, SPICLK low (clock polarity = 1)	$0.5t_{c(SPC)M}-10$	$0.5t_{c(SPC)M}$	$0.5t_{c(SPC)M}-0.5t_{c(LCO)}-10$	$0.5t_{c(SPC)M}-0.5t_{c(LCO)}$	
3§	$t_{w(SPCL)M}$	Pulse duration, SPICLK low (clock polarity = 0)	$0.5t_{c(SPC)M}-10$	$0.5t_{c(SPC)M}$	$0.5t_{c(SPC)M}+0.5t_{c(LCO)}-10$	$0.5t_{c(SPC)M}+0.5t_{c(LCO)}$	ns
	$t_{w(SPCH)M}$	Pulse duration, SPICLK high (clock polarity = 1)	$0.5t_{c(SPC)M}-10$	$0.5t_{c(SPC)M}$	$0.5t_{c(SPC)M}+0.5t_{c(LCO)}-10$	$0.5t_{c(SPC)M}+0.5t_{c(LCO)}$	
4§	$t_{d(SPCH-SIMO)M}$	Delay time, SPICLK high to SPISIMO valid (clock polarity = 0)	−10	10	−10	10	ns
	$t_{d(SPCL-SIMO)M}$	Delay time, SPICLK low to SPISIMO valid (clock polarity = 1)	−10	10	−10	10	
5§	$t_{v(SPCL-SIMO)M}$	Valid time, SPISIMO data valid after SPICLK low (clock polarity = 0)	$0.5t_{c(SPC)M}-10$		$0.5t_{c(SPC)M}+0.5t_{c(LCO)}-10$		ns
	$t_{v(SPCH-SIMO)M}$	Valid time, SPISIMO data valid after SPICLK high (clock polarity = 1)	$0.5t_{c(SPC)M}-10$		$0.5t_{c(SPC)M}+0.5t_{c(LCO)}-10$		
8§	$t_{su(SOMI-SPCL)M}$	Setup time, SPISOMI before SPICLK low (clock polarity = 0)	0		0		ns
	$t_{su(SOMI-SPCH)M}$	Setup time, SPISOMI before SPICLK high (clock polarity = 1)	0		0		
9§	$t_{v(SPCL-SOMI)M}$	Valid time, SPISOMI data valid after SPICLK low (clock polarity = 0)	$0.25t_{c(SPC)M}-10$		$0.5t_{c(SPC)M}-0.5t_{c(LCO)}-10$		ns
	$t_{v(SPCH-SOMI)M}$	Valid time, SPISOMI data valid after SPICLK high (clock polarity = 1)	$0.25t_{c(SPC)M}-10$		$0.5t_{c(SPC)M}-0.5t_{c(LCO)}-10$		

† The MASTER/SLAVE bit (SPICTL.2) is set and the CLOCK PHASE bit (SPICTL.3) is cleared.

‡ $t_{c(SPC)}$ = SPI clock cycle time = $\frac{LSPCLK}{4}$ or $\frac{LSPCLK}{(SPIBRR + 1)}$

$t_{c(LCO)}$ = LSPCLK cycle time

§ The active edge of the SPICLK signal referenced is controlled by the CLOCK POLARITY bit (SPICCR.6).

NOTE: Internal clock prescalers must be adjusted such that the SPI clock speed is not greater than the I/O buffer speed limit (20 MHz).

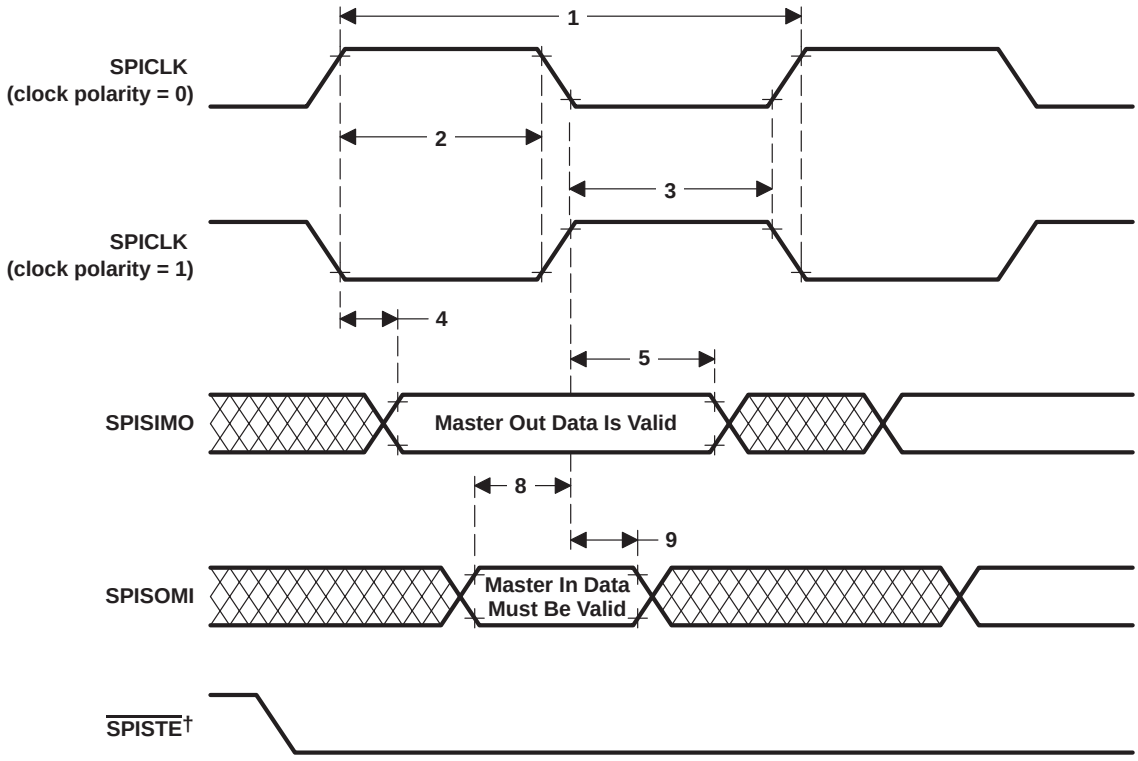

† In the master mode, $\overline{\text{SPISTE}}$ goes active $0.5t_{c(SPC)}$ before valid SPI clock edge. On the trailing end of the word, the SPISTE will go inactive $0.5t_{c(SPC)}$ after the receiving edge (SPICLK) of the last data bit, except that $\overline{\text{SPISTE}}$ stays active between back-to-back transmit words in both FIFO and nonFIFO modes...

Figure 6−22. SPI Master Mode External Timing (Clock Phase = 0)

Table 6−24. SPI Master Mode External Timing (Clock Phase = 1)†‡

NO.			SPI WHEN (SPIBRR + 1) IS EVEN OR SPIBRR = 0 OR 2		SPI WHEN (SPIBRR + 1) IS ODD AND SPIBRR > 3		UNIT
			MIN	MAX	MIN	MAX	
1	$t_{c(SPC)M}$	Cycle time, SPICLK	$4t_{c(LCO)}$	$128t_{c(LCO)}$	$5t_{c(LCO)}$	$127t_{c(LCO)}$	ns
2§	$t_{w(SPCH)M}$	Pulse duration, SPICLK high (clock polarity = 0)	$0.5t_{c(SPC)M}-10$	$0.5t_{c(SPC)M}$	$0.5t_{c(SPC)M}-0.5t_{c(LCO)}-10$	$0.5t_{c(SPC)M}-0.5t_{c(LCO)}$	ns
	$t_{w(SPCL)M}$	Pulse duration, SPICLK low (clock polarity = 1)	$0.5t_{c(SPC)M}-10$	$0.5t_{c(SPC)M}$	$0.5t_{c(SPC)M}-0.5t_{c(LCO)}-10$	$0.5t_{c(SPC)M}-0.5t_{c(LCO)}$	
3§	$t_{w(SPCL)M}$	Pulse duration, SPICLK low (clock polarity = 0)	$0.5t_{c(SPC)M}-10$	$0.5t_{c(SPC)M}$	$0.5t_{c(SPC)M}+0.5t_{c(LCO)}-10$	$0.5t_{c(SPC)M}+0.5t_{c(LCO)}$	ns
	$t_{w(SPCH)M}$	Pulse duration, SPICLK high (clock polarity = 1)	$0.5t_{c(SPC)M}-10$	$0.5t_{c(SPC)M}$	$0.5t_{c(SPC)M}+0.5t_{c(LCO)}-10$	$0.5t_{c(SPC)M}+0.5t_{c(LCO)}$	
6§	$t_{su(SIMO-SPCH)M}$	Setup time, SPISIMO data valid before SPICLK high (clock polarity = 0)	$0.5t_{c(SPC)M}-10$		$0.5t_{c(SPC)M}-10$		ns
	$t_{su(SIMO-SPCL)M}$	Setup time, SPISIMO data valid before SPICLK low (clock polarity = 1)	$0.5t_{c(SPC)M}-10$		$0.5t_{c(SPC)M}-10$		
7§	$t_{v(SPCH-SIMO)M}$	Valid time, SPISIMO data valid after SPICLK high (clock polarity = 0)	$0.5t_{c(SPC)M}-10$		$0.5t_{c(SPC)M}-10$		ns
	$t_{v(SPCL-SIMO)M}$	Valid time, SPISIMO data valid after SPICLK low (clock polarity = 1)	$0.5t_{c(SPC)M}-10$		$0.5t_{c(SPC)M}-10$		
10§	$t_{su(SOMI-SPCH)M}$	Setup time, SPISOMI before SPICLK high (clock polarity = 0)	0		0		ns
	$t_{su(SOMI-SPCL)M}$	Setup time, SPISOMI before SPICLK low (clock polarity = 1)	0		0		
11§	$t_{v(SPCH-SOMI)M}$	Valid time, SPISOMI data valid after SPICLK high (clock polarity = 0)	$0.25t_{c(SPC)M}-10$		$0.5t_{c(SPC)M}-10$		ns
	$t_{v(SPCL-SOMI)M}$	Valid time, SPISOMI data valid after SPICLK low (clock polarity = 1)	$0.25t_{c(SPC)M}-10$		$0.5t_{c(SPC)M}-10$		

† The MASTER/SLAVE bit (SPICTL.2) is set and the CLOCK PHASE bit (SPICTL.3) is set.

‡ $t_{c(SPC)}$ = SPI clock cycle time = $\frac{LSPCLK}{4}$ or $\frac{LSPCLK}{(SPIBRR + 1)}$

$t_{c(LCO)}$ = LSPCLK cycle time

§ The active edge of the SPICLK signal referenced is controlled by the CLOCK POLARITY bit (SPICCR.6).

NOTE: Internal clock prescalers must be adjusted such that the SPI clock speed is not greater than the I/O buffer speed limit (20 MHz).

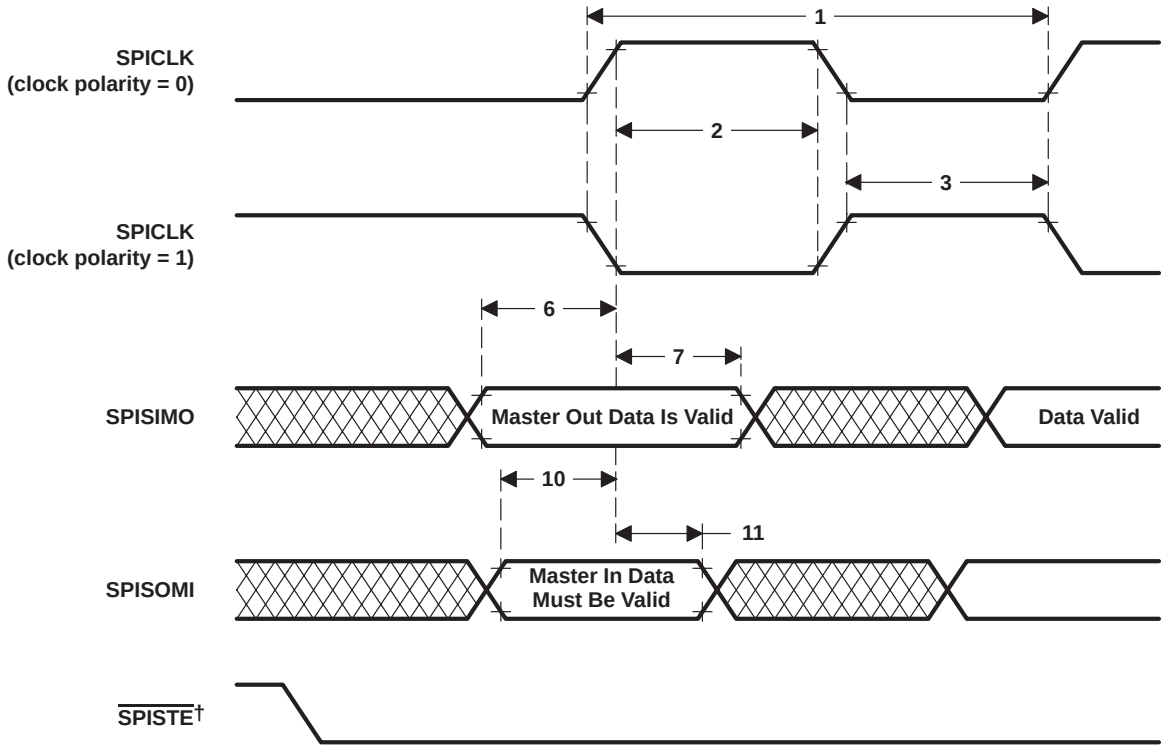

† In the master mode, $\overline{\text{SPISTE}}$ goes active $0.5t_{c(SPC)}$ before valid SPI clock edge. On the trailing end of the word, the SPISTE will go inactive $0.5t_{c(SPC)}$ after the receiving edge (SPICLK) of the last data bit, except that $\overline{\text{SPISTE}}$ stays active between back-to-back transmit words in both FIFO and nonFIFO modes..

Figure 6−23. SPI Master External Timing (Clock Phase = 1)

6.20 SPI Slave Mode Timing

Table 6−25. SPI Slave Mode External Timing (Clock Phase = 0)†‡

NO.			MIN	MAX	UNIT
12	$t_{c(SPC)S}$	Cycle time, SPICLK	$4t_{c(LCO)}$‡		ns
13§	$t_{w(SPCH)S}$	Pulse duration, SPICLK high (clock polarity = 0)	$0.5t_{c(SPC)S}-10$	$0.5t_{c(SPC)S}$	ns
	$t_{w(SPCL)S}$	Pulse duration, SPICLK low (clock polarity = 1)	$0.5t_{c(SPC)S}-10$	$0.5t_{c(SPC)S}$	
14§	$t_{w(SPCL)S}$	Pulse duration, SPICLK low (clock polarity = 0)	$0.5t_{c(SPC)S}-10$	$0.5t_{c(SPC)S}$	ns
	$t_{w(SPCH)S}$	Pulse duration, SPICLK high (clock polarity = 1)	$0.5t_{c(SPC)S}-10$	$0.5t_{c(SPC)S}$	
15§	$t_{d(SPCH-SOMI)S}$	Delay time, SPICLK high to SPISOMI valid (clock polarity = 0)	$0.375t_{c(SPC)S}-10$		ns
	$t_{d(SPCL-SOMI)S}$	Delay time, SPICLK low to SPISOMI valid (clock polarity = 1)	$0.375t_{c(SPC)S}-10$		
16§	$t_{v(SPCL-SOMI)S}$	Valid time, SPISOMI data valid after SPICLK low (clock polarity =0)	$0.75t_{c(SPC)S}$		ns
	$t_{v(SPCH-SOMI)S}$	Valid time, SPISOMI data valid after SPICLK high (clock polarity =1)	$0.75t_{c(SPC)S}$		
19§	$t_{su(SIMO-SPCL)S}$	Setup time, SPISIMO before SPICLK low (clock polarity = 0)	0		ns
	$t_{su(SIMO-SPCH)S}$	Setup time, SPISIMO before SPICLK high (clock polarity = 1)	0		
20§	$t_{v(SPCL-SIMO)S}$	Valid time, SPISIMO data valid after SPICLK low (clock polarity = 0)	$0.5t_{c(SPC)S}$		ns
	$t_{v(SPCH-SIMO)S}$	Valid time, SPISIMO data valid after SPICLK high (clock polarity = 1)	$0.5t_{c(SPC)S}$		

† The MASTER / SLAVE bit (SPICTL.2) is cleared and the CLOCK PHASE bit (SPICTL.3) is cleared.

‡ $t_{c(SPC)}$ = SPI clock cycle time = $\frac{LSPCLK}{4}$ or $\frac{LSPCLK}{(SPIBRR + 1)}$

$t_{c(LCO)}$ = LSPCLK cycle time

§ The active edge of the SPICLK signal referenced is controlled by the CLOCK POLARITY bit (SPICCR.6).

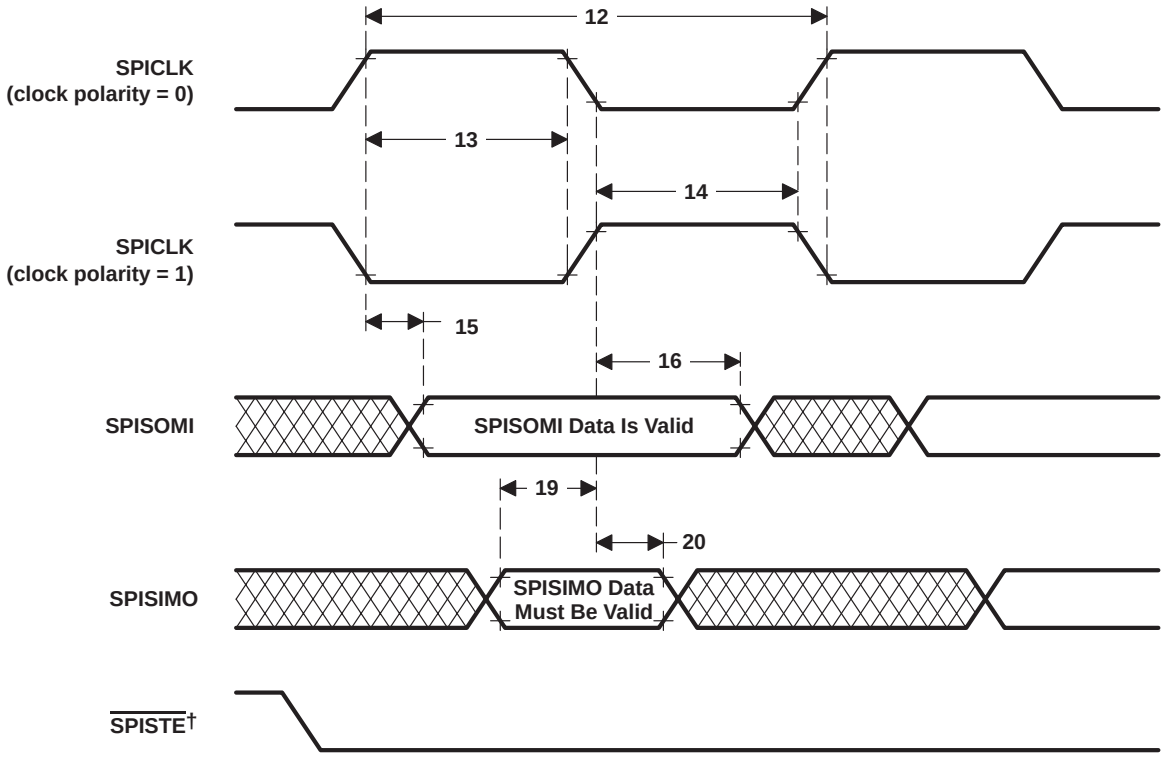

† In the slave mode, the $\overline{\text{SPISTE}}$ signal should be asserted low at least $0.5t_{c(SPC)}$ before the valid SPI clock edge and remain low for at least $0.5t_{c(SPC)}$ after the receiving edge (SPICLK) of the last data bit.

Figure 6−24. SPI Slave Mode External Timing (Clock Phase = 0)

Table 6−26. SPI Slave Mode External Timing (Clock Phase = 1)†‡

NO.			MIN	MAX	UNIT
12	$t_{c(SPC)S}$	Cycle time, SPICLK	$8t_{c(LCO)}$		ns
13§	$t_{w(SPCH)S}$	Pulse duration, SPICLK high (clock polarity = 0)	$0.5t_{c(SPC)S}-10$	$0.5t_{c(SPC)S}$	ns
	$t_{w(SPCL)S}$	Pulse duration, SPICLK low (clock polarity = 1)	$0.5t_{c(SPC)S}-10$	$0.5t_{c(SPC)S}$	
14§	$t_{w(SPCL)S}$	Pulse duration, SPICLK low (clock polarity = 0)	$0.5t_{c(SPC)S}-10$	$0.5t_{c(SPC)S}$	ns
	$t_{w(SPCH)S}$	Pulse duration, SPICLK high (clock polarity = 1)	$0.5t_{c(SPC)S}-10$	$0.5t_{c(SPC)S}$	
17§	$t_{su(SOMI-SPCH)S}$	Setup time, SPISOMI before SPICLK high (clock polarity = 0)	$0.125t_{c(SPC)S}$		ns
	$t_{su(SOMI-SPCL)S}$	Setup time, SPISOMI before SPICLK low (clock polarity = 1)	$0.125t_{c(SPC)S}$		
18§	$t_{v(SPCH-SOMI)S}$	Valid time, SPISOMI data valid after SPICLK high (clock polarity =0)	$0.75t_{c(SPC)S}$		ns
	$t_{v(SPCL-SOMI)S}$	Valid time, SPISOMI data valid after SPICLK low (clock polarity =1)	$0.75t_{c(SPC)S}$		
21§	$t_{su(SIMO-SPCH)S}$	Setup time, SPISIMO before SPICLK high (clock polarity = 0)	0		ns
	$t_{su(SIMO-SPCL)S}$	Setup time, SPISIMO before SPICLK low (clock polarity = 1)	0		
22§	$t_{v(SPCH-SIMO)S}$	Valid time, SPISIMO data valid after SPICLK high (clock polarity = 0)	$0.5t_{c(SPC)S}$		ns
	$t_{v(SPCL-SIMO)S}$	Valid time, SPISIMO data valid after SPICLK low (clock polarity = 1)	$0.5t_{c(SPC)S}$		

† The MASTER / SLAVE bit (SPICTL.2) is cleared and the CLOCK PHASE bit (SPICTL.3) is set.

‡ $t_{c(SPC)}$ = SPI clock cycle time = $\frac{LSPCLK}{4}$ or $\frac{LSPCLK}{(SPIBRR + 1)}$

$t_{c(LCO)}$ = LSPCLK cycle time

§ The active edge of the SPICLK signal referenced is controlled by the CLOCK POLARITY bit (SPICCR.6).

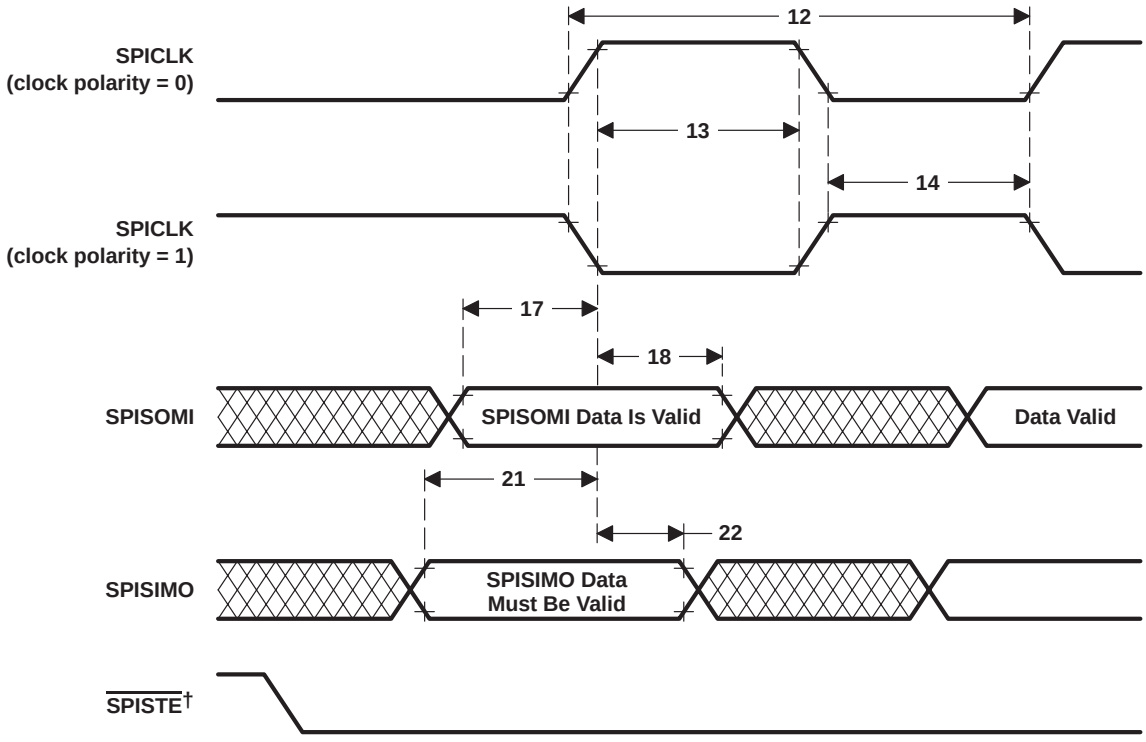

† In the slave mode, the $\overline{SPISTE}$ signal should be asserted low at least $0.5t_{c(SPC)}$ before the valid SPI clock edge and remain low for at least $0.5t_{c(SPC)}$ after the receiving edge (SPICLK) of the last data bit.

Figure 6−25. SPI Slave Mode External Timing (Clock Phase = 1)

6.21 External Interface (XINTF) Timing

Each XINTF access consists of three parts: Lead, Active, and Trail. The user configures the Lead/Active/Trail wait states in the XTIMING registers. There is one XTIMING register for each XINTF zone. Table 6−27 shows the relationship between the parameters configured in the XTIMING register and the duration of the pulse in terms of XTIMCLK cycles.

Table 6−27. Relationship Between Parameters Configured in XTIMING and Duration of Pulse†‡

DESCRIPTION		DURATION (ns)	
		X2TIMING = 0	X2TIMING = 1
LR	Lead period, read access	XRDLEAD x $t_{c(XTIM)}$	(XRDLEAD x 2) x $t_{c(XTIM)}$
AR	Active period, read access	(XRDACTIVE + WS + 1) x $t_{c(XTIM)}$	(XRDACTIVE x 2 + WS + 1) x $t_{c(XTIM)}$
TR	Trail period, read access	XRDTRAIL x $t_{c(XTIM)}$	(XRDTRAIL x 2) x $t_{c(XTIM)}$
LW	Lead period, write access	XWRLEAD x $t_{c(XTIM)}$	(XWRLEAD x 2) x $t_{c(XTIM)}$
AW	Active period, write access	(XWRACTIVE + WS + 1) x $t_{c(XTIM)}$	(XWRACTIVE x 2 + WS + 1) x $t_{c(XTIM)}$
TW	Trail period, write access	XWRTRAIL x $t_{c(XTIM)}$	(XWRTRAIL x 2) x $t_{c(XTIM)}$

† $t_{c(XTIM)}$ − Cycle time, XTIMCLK
‡ WS refers to the number of wait states inserted by hardware when using XREADY. If the zone is configured to ignore XREADY (USEREADY = 0), then WS = 0.

Minimum wait state requirements must be met when configuring each zone's XTIMING register. These requirements are in addition to any timing requirements as specified by that device's data sheet. No internal device hardware is included to detect illegal settings.

- If the XREADY signal is ignored (USEREADY = 0), then:

  1. Lead: $LR \geq t_{c(XTIM)}$
     $LW \geq t_{c(XTIM)}$

  These requirements result in the following XTIMING register configuration restrictions§:

XRDLEAD	XRDACTIVE	XRDTRAIL	XWRLEAD	XWRACTIVE	XWRTRAIL	X2TIMING
≥ 1	≥ 0	≥ 0	≥ 1	≥ 0	≥ 0	0, 1

§ No hardware to detect illegal XTIMING configurations

Examples of valid and invalid timing when not sampling XREADY§:

	XRDLEAD	XRDACTIVE	XRDTRAIL	XWRLEAD	XWRACTIVE	XWRTRAIL	X2TIMING
Invalid	0	0	0	0	0	0	0, 1
Valid	1	0	0	1	0	0	0, 1

§ No hardware to detect illegal XTIMING configurations

- If the XREADY signal is sampled in the Synchronous mode (USEREADY = 1, READYMODE = 0), then:

  1. Lead: $LR \geq t_{c(XTIM)}$
     $LW \geq t_{c(XTIM)}$
  2. Active: $AR \geq 2 \times t_{c(XTIM)}$
     $AW \geq 2 \times t_{c(XTIM)}$

     NOTE: Restriction does not include external hardware wait states

  These requirements result in the following XTIMING register configuration restrictions†:

XRDLEAD	XRDACTIVE	XRDTRAIL	XWRLEAD	XWRACTIVE	XWRTRAIL	X2TIMING
≥ 1	≥ 1	≥ 0	≥ 1	≥ 1	≥ 0	0, 1

† No hardware to detect illegal XTIMING configurations

Examples of valid and invalid timing when using Synchronous XREADY†:

	XRDLEAD	XRDACTIVE	XRDTRAIL	XWRLEAD	XWRACTIVE	XWRTRAIL	X2TIMING
Invalid	0	0	0	0	0	0	0, 1
Invalid	1	0	0	1	0	0	0, 1
Valid	1	1	0	1	1	0	0, 1

† No hardware to detect illegal XTIMING configurations

- If the XREADY signal is sampled in the Asynchronous mode (USEREADY = 1, READYMODE = 1), then:

  1. Lead: $LR \geq t_{c(XTIM)}$
     $LW \geq t_{c(XTIM)}$
  2. Active: $AR \geq 2 \times t_{c(XTIM)}$
     $AW \geq 2 \times t_{c(XTIM)}$

     NOTE: Restriction does not include external hardware wait states
  3. Lead + Active: $LR + AR \geq 4 \times t_{c(XTIM)}$
     $LW + AW \geq 4 \times t_{c(XTIM)}$

     NOTE: Restriction does not include external hardware wait states

  These requirements result in the following XTIMING register configuration restrictions†:

XRDLEAD	XRDACTIVE	XRDTRAIL	XWRLEAD	XWRACTIVE	XWRTRAIL	X2TIMING
≥ 1	≥ 2	0	≥ 1	≥ 2	0	0, 1

† No hardware to detect illegal XTIMING configurations

or†

XRDLEAD	XRDACTIVE	XRDTRAIL	XWRLEAD	XWRACTIVE	XWRTRAIL	X2TIMING
≥ 2	≥ 1	0	≥ 2	≥ 1	0	0, 1

† No hardware to detect illegal XTIMING configurations

Examples of valid and invalid timing when using Asynchronous XREADY†:

	XRDLEAD	XRDACTIVE	XRDTRAIL	XWRLEAD	XWRACTIVE	XWRTRAIL	X2TIMING
Invalid	0	0	0	0	0	0	0, 1
Invalid	1	0	0	1	0	0	0, 1
Invalid	1	1	0	1	1	0	0
Valid	1	1	0	1	1	0	1
Valid	1	2	0	1	2	0	0, 1
Valid	2	1	0	2	1	0	0, 1

† No hardware to detect illegal XTIMING configurations

Unless otherwise specified, all XINTF timing is applicable for the clock configurations shown in Table 6−28.

Table 6−28. XINTF Clock Configurations

Mode	SYSCLKOUT	XTIMCLK	XCLKOUT
1 Example:	 150 MHz	SYSCLKOUT 150 MHz	SYSCLKOUT 150 MHz
2 Example:	 150 MHz	SYSCLKOUT 150 MHz	1/2 SYSCLKOUT 75 MHz
3 Example:	 150 MHz	1/2 SYSCLKOUT 75 MHz	1/2 SYSCLKOUT 75 MHz
4 Example:	 150 MHz	1/2 SYSCLKOUT 75 MHz	1/4 SYSCLKOUT 37.5 MHz

The relationship between SYSCLKOUT and XTIMCLK is shown in Figure 6−26.

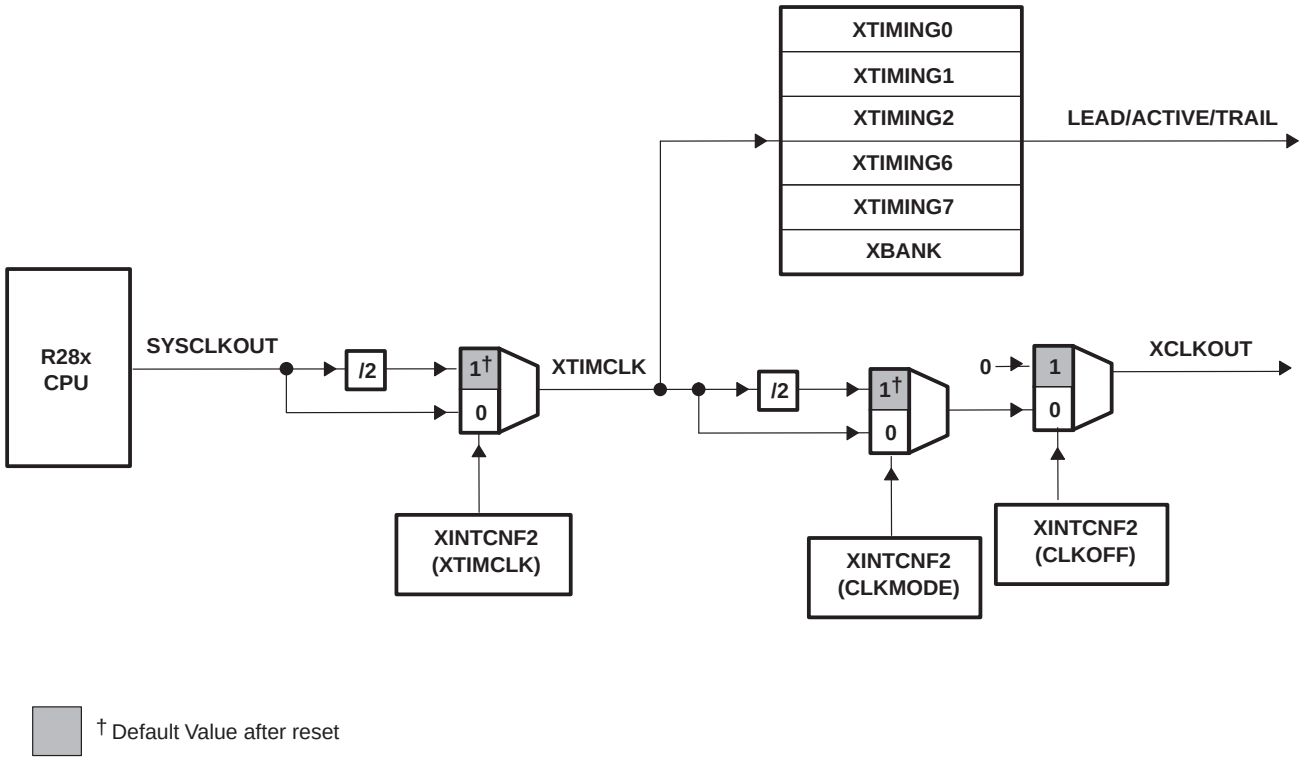

Figure 6−26. Relationship Between XTIMCLK and SYSCLKOUT

6.22 XINTF Signal Alignment to XCLKOUT

For each XINTF access, the number of lead, active, and trail cycles is based on the internal clock XTIMCLK. Strobes such as $\overline{\text{XRD}}$, $\overline{\text{XWE}}$, and zone chip-select (XZCS) change state in relationship to the rising edge of XTIMCLK. The external clock, XCLKOUT, can be configured to be either equal to or one-half the frequency of XTIMCLK.

For the case where XCLKOUT = XTIMCLK, all of the XINTF strobes will change state with respect to the rising edge of XCLKOUT. For the case where XCLKOUT = one-half XTIMCLK, some strobes will change state either on the rising edge of XCLKOUT or the falling edge of XCLKOUT. In the XINTF timing tables, the notation XCOHL is used to indicate that the parameter is with respect to either case; XCLKOUT rising edge (high) or XCLKOUT falling edge (low). If the parameter is always with respect to the rising edge of XCLKOUT, the notation XCOH is used.

For the case where XCLKOUT = one-half XTIMCLK, the XCLKOUT edge with which the change will be aligned can be determined based on the number of XTIMCLK cycles from the start of the access to the point at which the signal changes. If this number of XTIMCLK cycles is even, the alignment will be with respect to the rising edge of XCLKOUT. If this number is odd, then the signal will change with respect to the falling edge of XCLKOUT. Examples include the following:

- Strobes that change at the beginning of an access always align to the rising edge of XCLKOUT. This is because all XINTF accesses begin with respect to the rising edge of XCLKOUT.

Examples:	XZCSL	Zone chip-select active low
	XRNWL	XR/$\overline{W}$ active low

- Strobes that change at the beginning of the active period will align to the rising edge of XCLKOUT if the total number of lead XTIMCLK cycles for the access is even. If the number of lead XTIMCLK cycles is odd, then the alignment will be with respect to the falling edge of XCLKOUT.

Examples:	XRDL	$\overline{XRD}$ active low
	XWEL	$\overline{XWE}$ active low

- Strobes that change at the beginning of the trail period will align to the rising edge of XCLKOUT if the total number of lead + active XTIMCLK cycles (including hardware waitstates) for the access is even. If the number of lead + active XTIMCLK cycles (including hardware waitstates) is odd, then the alignment will be with respect to the falling edge of XCLKOUT.

Examples:	XRDH	$\overline{XRD}$ inactive high
	XWEH	$\overline{XWE}$ inactive high

- Strobes that change at the end of the access will align to the rising edge of XCLKOUT if the total number of lead + active + trail XTIMCLK cycles (including hardware waitstates) is even. If the number of lead + active + trail XTIMCLK cycles (including hardware waitstates) is odd, then the alignment will be with respect to the falling edge of XCLKOUT.

Examples:	XZCSH	Zone chip-select inactive high
	XRNWH	XR/$\overline{W}$ inactive high

6.23 External Interface Read Timing

Table 6−29. External Memory Interface Read Switching Characteristics

PARAMETER		MIN	MAX	UNIT
$t_{d(XCOH-XZCSL)}$	Delay time, XCLKOUT high to zone chip-select active low		1	ns
$t_{d(XCOHL-XZCSH)}$	Delay time, XCLKOUT high/low to zone chip-select inactive high	−2	3	ns
$t_{d(XCOH-XA)}$	Delay time, XCLKOUT high to address valid		2	ns
$t_{d(XCOHL-XRDL)}$	Delay time, XCLKOUT high/low to $\overline{XRD}$ active low		1	ns
$t_{d(XCOHL-XRDH}$	Delay time, XCLKOUT high/low to $\overline{XRD}$ inactive high	−2	1	ns
$t_{h(XA)XZCSH}$	Hold time, address valid after zone chip-select inactive high	†		ns
$t_{h(XA)XRD}$	Hold time, address valid after $\overline{XRD}$ inactive high	†		ns

† During inactive cycles, the XINTF address bus will always hold the last address put out on the bus. This includes alignment cycles.

Table 6−30. External Memory Interface Read Timing Requirements

		MIN	MAX	UNIT
$t_{a(A)}$	Access time, read data from address valid		(LR + AR) − 14‡	ns
$t_{a(XRD)}$	Access time, read data valid from $\overline{XRD}$ active low		AR − 12‡	ns
$t_{su(XD)XRD}$	Setup time, read data valid before $\overline{XRD}$ strobe inactive high	12		ns
$t_{h(XD)XRD}$	Hold time, read data valid after $\overline{XRD}$ inactive high	0		ns

‡ LR = Lead period, read access. AR = Active period, read access. See Table 6−27.

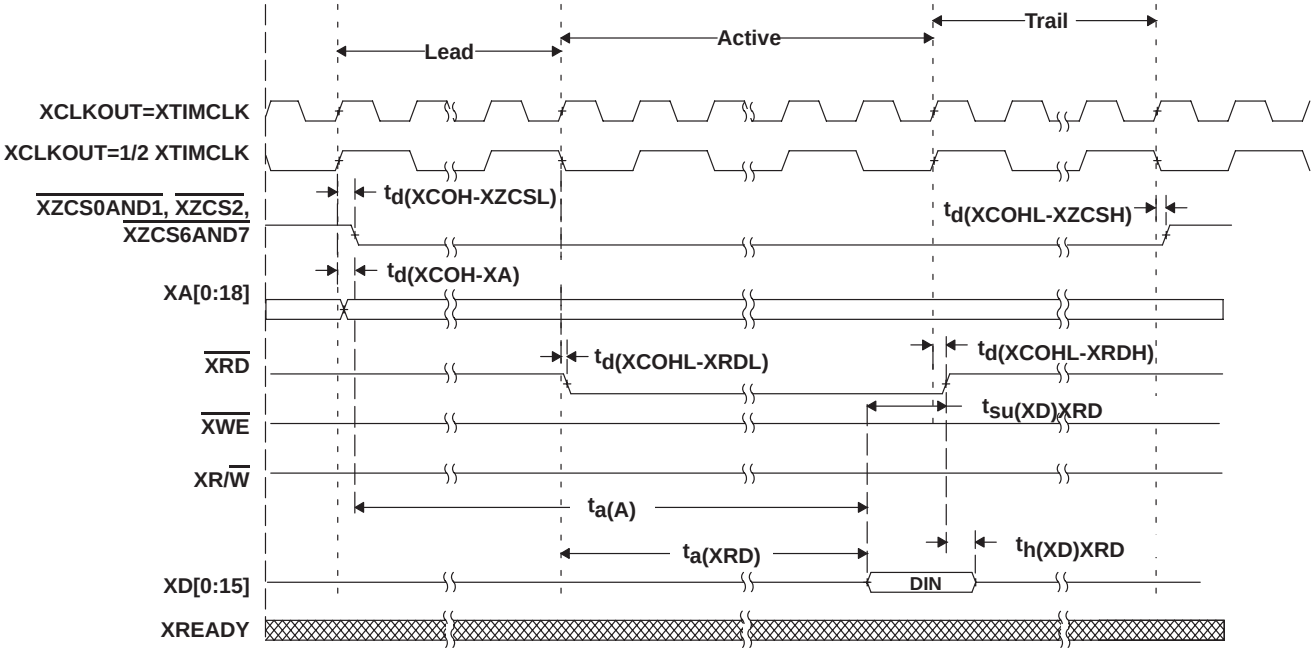

NOTES: A. All XINTF accesses (lead period) begin on the rising edge of XCLKOUT. When necessary, the device will insert an alignment cycle before an access to meet this requirement.
B. During alignment cycles, all signals will transition to their inactive state.
C. For USEREADY = 0, the external XREADY input signal is ignored.
D. XA[0:18] will hold the last address put on the bus during inactive cycles, including alignment cycles.

Figure 6−27. Example Read Access

XTIMING register parameters used for this example:

XRDLEAD	XRDACTIVE	XRDTRAIL	USEREADY	X2TIMING	XWRLEAD	XWRACTIVE	XWRTRAIL	READYMODE
≥1	≥0	≥0	0	0	N/A†	N/A†	N/A†	N/A†

† N/A = “Don’t care” for this example

6.24 External Interface Write Timing

Table 6−31. External Memory Interface Write Switching Characteristics

PARAMETER		MIN	MAX	UNIT
$t_{d(XCOH-XZCSL)}$	Delay time, XCLKOUT high to zone chip-select active low		1	ns
$t_{d(XCOHL-XZCSH)}$	Delay time, XCLKOUT high or low to zone chip-select inactive high	−2	3	ns
$t_{d(XCOH-XA)}$	Delay time, XCLKOUT high to address valid		2	ns
$t_{d(XCOHL-XWEL)}$	Delay time, XCLKOUT high/low to $\overline{XWE}$ low		2	ns
$t_{d(XCOHL-XWEH)}$	Delay time, XCLKOUT high/low to $\overline{XWE}$ high		2	ns
$t_{d(XCOH-XRNWL)}$	Delay time, XCLKOUT high to XR/$\overline{W}$ low		1	ns
$t_{d(XCOHL-XRNWH)}$	Delay time, XCLKOUT high/low to XR/$\overline{W}$ high	−2	1	ns
$t_{en(XD)XWEL}$	Enable time, data bus driven from $\overline{XWE}$ low	0		ns
$t_{d(XWEL-XD)}$	Delay time, data valid after $\overline{XWE}$ active low		4	ns
$t_{h(XA)XZCSH}$	Hold time, address valid after zone chip-select inactive high	†		ns
$t_{h(XD)XWE}$	Hold time, write data valid after $\overline{XWE}$ inactive high	TW−2‡		ns
$t_{dis(XD)XRNW}$	Data bus disabled after XR/$\overline{W}$ inactive high	4		ns

† During inactive cycles, the XINTF address bus will always hold the last address put out on the bus. This includes alignment cycles.
‡ TW = Trail period, write access. See Table 6−27.

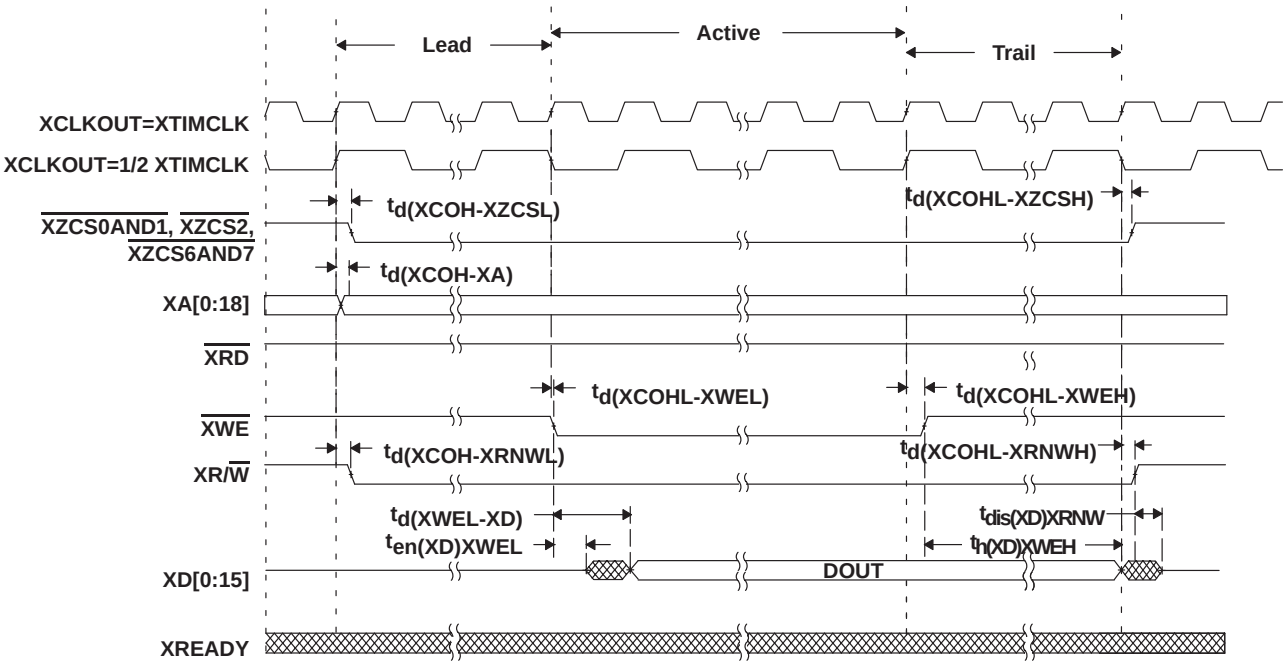

NOTES: A. All XINTF accesses (lead period) begin on the rising edge of XCLKOUT. When necessary, the device will insert an alignment cycle before an access to meet this requirement.
B. During alignment cycles, all signals will transition to their inactive state.
C. For USEREADY = 0, the external XREADY input signal is ignored.
D. XA[0:18] will hold the last address put on the bus during inactive cycles, including alignment cycles.

Figure 6−28. Example Write Access

XTIMING register parameters used for this example:

XRDLEAD	XRDACTIVE	XRDTRAIL	USEREADY	X2TIMING	XWRLEAD	XWRACTIVE	XWRTRAIL	READYMODE
N/A†	N/A†	N/A†	0	0	≥1	≥0	≥0	N/A†

† N/A = “Don’t care” for this example

6.25 External Interface Ready-on-Read Timing With One External Wait State

Table 6−32. External Memory Interface Read Switching Characteristics (Ready-on-Read, 1 Wait State)

PARAMETER		MIN	MAX	UNIT
$t_{d(XCOH-XZCSL)}$	Delay time, XCLKOUT high to zone chip-select active low		1	ns
$t_{d(XCOHL-XZCSH)}$	Delay time, XCLKOUT high/low to zone chip-select inactive high	−2	3	ns
$t_{d(XCOH-XA)}$	Delay time, XCLKOUT high to address valid		2	ns
$t_{d(XCOHL-XRDL)}$	Delay time, XCLKOUT high/low to $\overline{XRD}$ active low		1	ns
$t_{d(XCOHL-XRDH}$	Delay time, XCLKOUT high/low to $\overline{XRD}$ inactive high	−2	1	ns
$t_{h(XA)XZCSH}$	Hold time, address valid after zone chip-select inactive high	†		ns
$t_{h(XA)XRD}$	Hold time, address valid after $\overline{XRD}$ inactive high	†		ns

† During inactive cycles, the XINTF address bus will always hold the last address put out on the bus. This includes alignment cycles.

Table 6−33. External Memory Interface Read Timing Requirements (Ready-on-Read, 1 Wait State)

		MIN	MAX	UNIT
$t_{a(A)}$	Access time, read data from address valid		(LR + AR) − 14‡	ns
$t_{a(XRD)}$	Access time, read data valid from $\overline{XRD}$ active low		AR − 12‡	ns
$t_{su(XD)XRD}$	Setup time, read data valid before $\overline{XRD}$ strobe inactive high	12		ns
$t_{h(XD)XRD}$	Hold time, read data valid after $\overline{XRD}$ inactive high	0		ns

‡ LR = Lead period, read access. AR = Active period, read access. See Table 6−27.

Table 6−34. Synchronous XREADY Timing Requirements (Ready-on-Read, 1 Wait State)§

		MIN	MAX	UNIT
$t_{su(XRDYsynchL)XCOHL}$	Setup time, XREADY (Synch) low before XCLKOUT high/low	15		ns
$t_{h(XRDYsynchL)}$	Hold time, XREADY (Synch) low	12		ns
$t_{e(XRDYsynchH)}$	Earliest time XREADY (Synch) can go high before the sampling XCLKOUT edge		3	ns
$t_{su(XRDYsynchH)XCOHL}$	Setup time, XREADY (Synch) high before XCLKOUT high/low	15		ns
$t_{h(XRDYsynchH)XZCSH}$	Hold time, XREADY (Synch) held high after zone chip select high	0		ns

§ The first XREADY (Synch) sample occurs with respect to E in Figure 6−29:

$E = (XRDLEAD + XRDACTIVE)\ t_{c(XTIM)}$

When first sampled, if XREADY (Synch) is found to be high, then the access will complete. If XREADY (Synch) is found to be low, it will be sampled again each $t_{c(XTIM)}$ until it is found to be high.

For each sample (n) the setup time (D) with respect to the beginning of the access can be calculated as:

$D = (XRDLEAD + XRDACTIVE + n - 1)\ t_{c(XTIM)} - t_{su(XRDYsynchL)XCOHL}$

where n is the sample number: n = 1, 2, 3, and so forth.

Table 6−35. Asynchronous XREADY Timing Requirements (Ready-on-Read, 1 Wait State)¶

		MIN	MAX	UNIT
$t_{su(XRDYAsynchL)XCOHL}$	Setup time, XREADY (Asynch) low before XCLKOUT high/low	11		ns
$t_{h(XRDYAsynchL)}$	Hold time, XREADY (Asynch) low	8		ns
$t_{e(XRDYAsynchH)}$	Earliest time XREADY (Asynch) can go high before the sampling XCLKOUT edge		3	ns
$t_{su(XRDYAsynchH)XCOHL}$	Setup time, XREADY (Asynch) high before XCLKOUT high/low	11		ns
$t_{h(XRDYasynchH)XZCSH}$	Hold time, XREADY (Asynch) held high after zone chip select high	0		ns

¶ The first XREADY (Asynch) sample occurs with respect to E in Figure 6−30:

$E = (XRDLEAD + XRDACTIVE - 2)\ t_{c(XTIM)}$

When first sampled, if XREADY (Asynch) is found to be high, then the access will complete. If XREADY (Asynch) is found to be low, it will be sampled again each $t_{c(XTIM)}$ until it is found to be high.

For each sample, setup time from the beginning of the access can be calculated as:

$D = (XRDLEAD + XRDACTIVE - 3 + n)\ t_{c(XTIM)} - t_{su(XRDYasynchL)XCOHL}$

where n is the sample number: n = 1, 2, 3, and so forth.

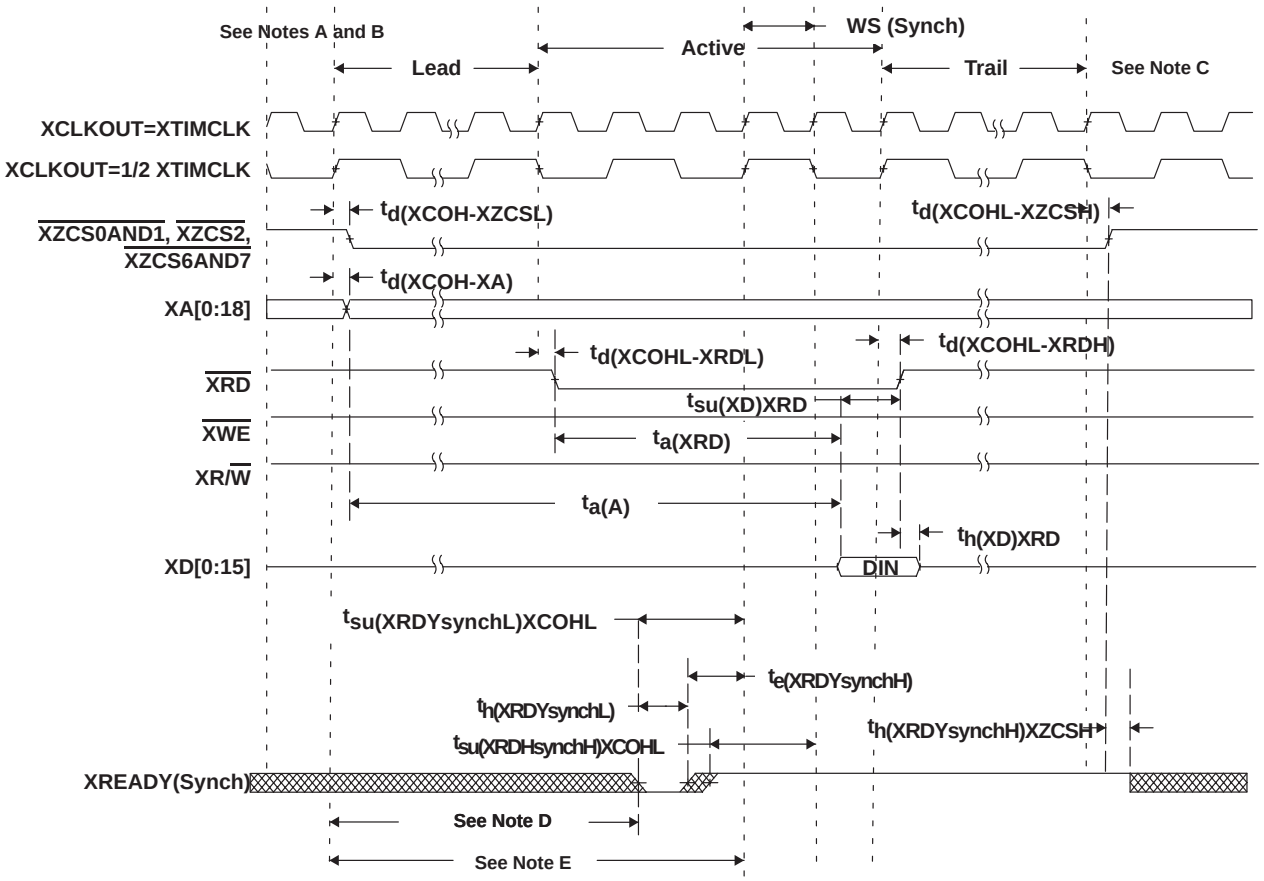

Legend:

▨ = Don't care. Signal can be high or low during this time.

NOTES: A. All XINTF accesses (lead period) begin on the rising edge of XCLKOUT. When necessary, the device will insert an alignment cycle before an access to meet this requirement.

B. During alignment cycles, all signals will transition to their inactive state.

C. During inactive cycles, the XINTF address bus will always hold the last address put out on the bus. This includes alignment cycles.

D. For each sample, setup time from the beginning of the access (D) can be calculated as:
$D = (XRDLEAD + XRDACTIVE + n - 1)\ t_{c(XTIM)} - t_{su(XRDYsynchL)XCOHL}$

E. Reference for the first sample is with respect to this point
$E = (XRDLEAD + XRDACTIVE)\ t_{c(XTIM)}$
where n is the sample number: n = 1, 2, 3, and so forth.

Figure 6−29. Example Read With Synchronous XREADY Access

XTIMING register parameters used for this example:

XRDLEAD	XRDACTIVE	XRDTRAIL	USEREADY	X2TIMING	XWRLEAD	XWRACTIVE	XWRTRAIL	READYMODE
≥1	3	≥1	1	0	N/A†	N/A†	N/A†	0 = XREADY (Synch)

† N/A = "Don't care" for this example

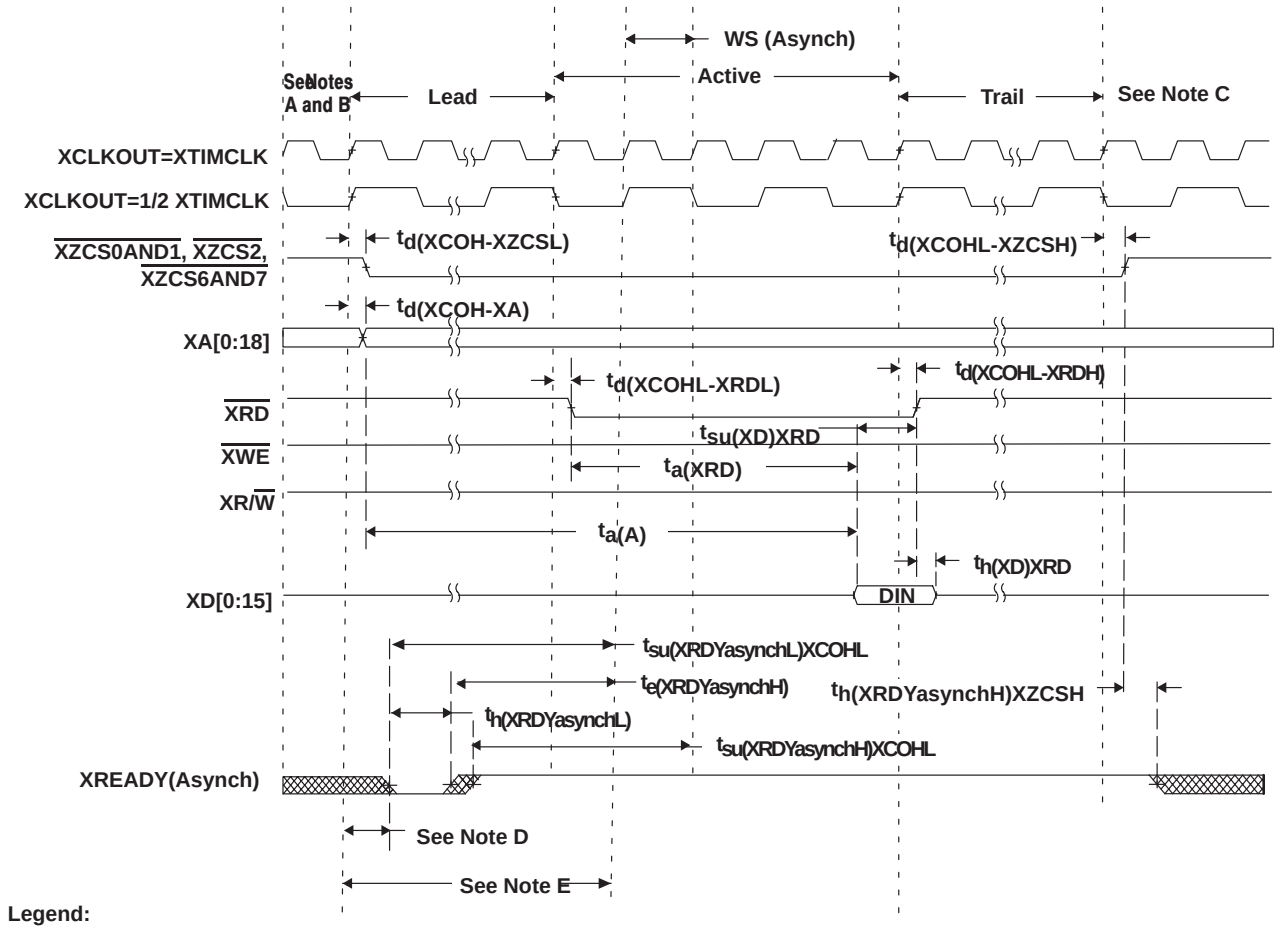

Legend:

▨ = Don't care. Signal can be high or low during this time.

NOTES: A. All XINTF accesses (lead period) begin on the rising edge of XCLKOUT. When necessary, the device will insert an alignment cycle before an access to meet this requirement.

B. During alignment cycles, all signals will transition to their inactive state.

C. During inactive cycles, the XINTF address bus will always hold the last address put out on the bus. This includes alignment cycles.

D. For each sample, setup time from the beginning of the access can be calculated as:
$D = (XRDLEAD + XRDACTIVE - 3 + n)\ t_{c(XTIM)} - t_{su(XRDYasynchL)XCOHL}$
where n is the sample number: n = 1, 2, 3, and so forth.

E. Reference for the first sample is with respect to this point:
$E = (XRDLEAD + XRDACTIVE - 2)\ t_{c(XTIM)}$

Figure 6−30. Example Read With Asynchronous XREADY Access

XTIMING register parameters used for this example:

XRDLEAD	XRDACTIVE	XRDTRAIL	USEREADY	X2TIMING	XWRLEAD	XWRACTIVE	XWRTRAIL	READYMODE
≥1	3	≥1	1	0	N/A†	N/A†	N/A†	1 = XREADY (Asynch)

† N/A = "Don't care" for this example

6.26 External Interface Ready-on-Write Timing With One External Wait State

Table 6−36. External Memory Interface Write Switching Characteristics (Ready-on-Write, 1 Wait State)

PARAMETER		MIN	MAX	UNIT
$t_{d(XCOH-XZCSL)}$	Delay time, XCLKOUT high to zone chip-select active low		1	ns
$t_{d(XCOHL-XZCSH)}$	Delay time, XCLKOUT high or low to zone chip-select inactive high	−2	3	ns
$t_{d(XCOH-XA)}$	Delay time, XCLKOUT high to address valid		2	ns
$t_{d(XCOHL-XWEL)}$	Delay time, XCLKOUT high/low to $\overline{XWE}$ low		2	ns
$t_{d(XCOHL-XWEH)}$	Delay time, XCLKOUT high/low to $\overline{XWE}$ high		2	ns
$t_{d(XCOH-XRNWL)}$	Delay time, XCLKOUT high to XR/$\overline{W}$ low		1	ns
$t_{d(XCOHL-XRNWH)}$	Delay time, XCLKOUT high/low to XR/$\overline{W}$ high	−2	1	ns
$t_{en(XD)XWEL}$	Enable time, data bus driven from $\overline{XWE}$ low	0		ns
$t_{d(XWEL-XD)}$	Delay time, data valid after $\overline{XWE}$ active low		4	ns
$t_{h(XA)XZCSH}$	Hold time, address valid after zone chip-select inactive high	†		ns
$t_{h(XD)XWE}$	Hold time, write data valid after $\overline{XWE}$ inactive high	TW−2‡		ns
$t_{dis(XD)XRNW}$	Data bus disabled after XR/$\overline{W}$ inactive high	4		ns

† During inactive cycles, the XINTF address bus will always hold the last address put out on the bus. This includes alignment cycles.
‡ TW = trail period, write access (see Table 6−27)

Table 6−37. Synchronous XREADY Timing Requirements (Ready-on-Write, 1 Wait State)§

		MIN	MAX	UNIT
$t_{su(XRDYsynchL)XCOHL}$	Setup time, XREADY (Synch) low before XCLKOUT high/low	15		ns
$t_{h(XRDYsynchL)}$	Hold time, XREADY (Synch) low	12		ns
$t_{e(XRDYsynchH)}$	Earliest time XREADY (Synch) can go high before the sampling XCLKOUT edge		3	ns
$t_{su(XRDYsynchH)XCOHL}$	Setup time, XREADY (Synch) high before XCLKOUT high/low	15		ns
$t_{h(XRDYsynchH)XZCSH}$	Hold time, XREADY (Synch) held high after zone chip select high	0		ns

§ The first XREADY (Synch) sample occurs with respect to E in Figure 6−31:
E =(XWRLEAD + XWRACTIVE) $t_{c(XTIM)}$
When first sampled, if XREADY (Synch) is found to be high, then the access will complete. If XREADY (Synch) is found to be low, it will be sampled again each $t_{c(XTIM)}$ until it is found to be high.
For each sample, setup time from the beginning of the access can be calculated as:
D =(XWRLEAD + XWRACTIVE +n − 1) $t_{c(XTIM)}$ − $t_{su(XRDYsynchL)XCOHL}$
where n is the sample number: n = 1, 2, 3, and so forth.

Table 6−38. Asynchronous XREADY Timing Requirements (Ready-on-Write, 1 Wait State)¶

		MIN	MAX	UNIT
$t_{su(XRDYasynchL)XCOHL}$	Setup time, XREADY (Asynch) low before XCLKOUT high/low	11		ns
$t_{h(XRDYasynchL)}$	Hold time, XREADY (Asynch) low	8		ns
$t_{e(XRDYasynchH)}$	Earliest time XREADY (Asynch) can go high before the sampling XCLKOUT edge		3	ns
$t_{su(XRDYasynchH)XCOHL}$	Setup time, XREADY (Asynch) high before XCLKOUT high/low	11		ns
$t_{h(XRDYasynchH)XZCSH}$	Hold time, XREADY (Asynch) held high after zone chip select high	0		ns

¶ The first XREADY (Synch) sample occurs with respect to E in Figure 6−32:
E = (XWRLEAD + XWRACTIVE − 2) $t_{c(XTIM)}$
When first sampled, if XREADY (Asynch) is found to be high, then the access will complete. If XREADY (Asynch) is found to be low, it will be sampled again each $t_{c(XTIM)}$ until it is found to be high.
For each sample, setup time from the beginning of the access can be calculated as:
D = (XWRLEAD + XWRACTIVE −3 + n) $t_{c(XTIM)}$ − $t_{su(XRDYasynchL)XCOHL}$
where n is the sample number: n = 1, 2, 3, and so forth.

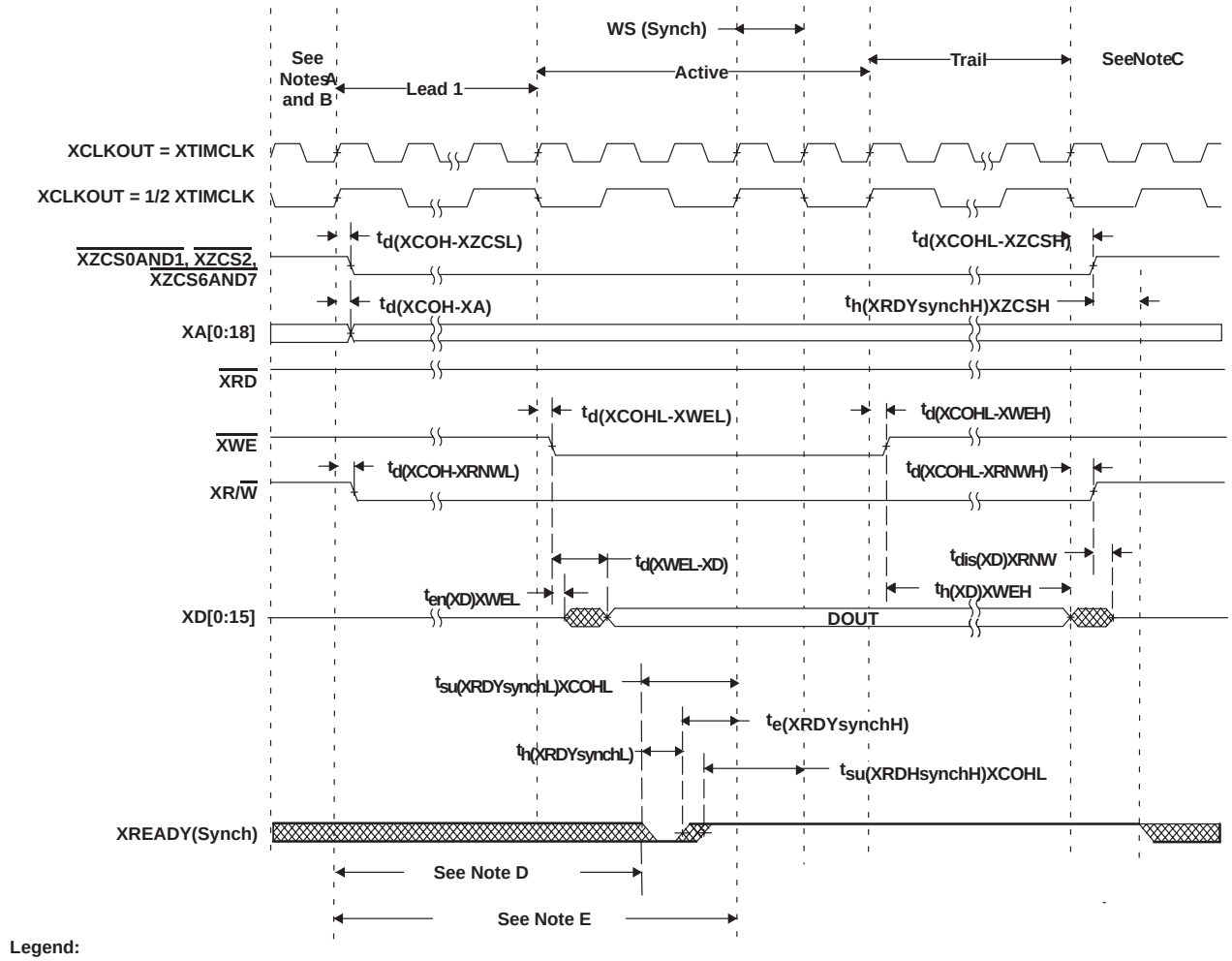

Legend:

= Don't care. Signal can be high or low during this time.

NOTES: A. All XINTF accesses (lead period) begin on the rising edge of XCLKOUT. When necessary, the device will insert an alignment cycle before an access to meet this requirement.

B. During alignment cycles, all signals will transition to their inactive state.

C. During inactive cycles, the XINTF address bus will always hold the last address put out on the bus. This includes alignment cycles.

D. For each sample, setup time from the beginning of the access can be calculated as
$D = (XWRLEAD + XWRACTIVE + n - 1)\ t_{c(XTIM)} - t_{su(XRDYsynchL)XCOHL}$
where n is the sample number: n = 1, 2, 3 and so forth.

E. Reference for the first sample is with respect to this point
$E = (XWRLEAD + XWRACTIVE)\ t_{c(XTIM)}$

Figure 6−31. Write With Synchronous XREADY Access

XTIMING register parameters used for this example:

XRDLEAD	XRDACTIVE	XRDTRAIL	USEREADY	X2TIMING	XWRLEAD	XWRACTIVE	XWRTRAIL	READYMODE
N/A†	N/A†	N/A†	1	0	≥1	3	≥1	0 = XREADY (Synch)

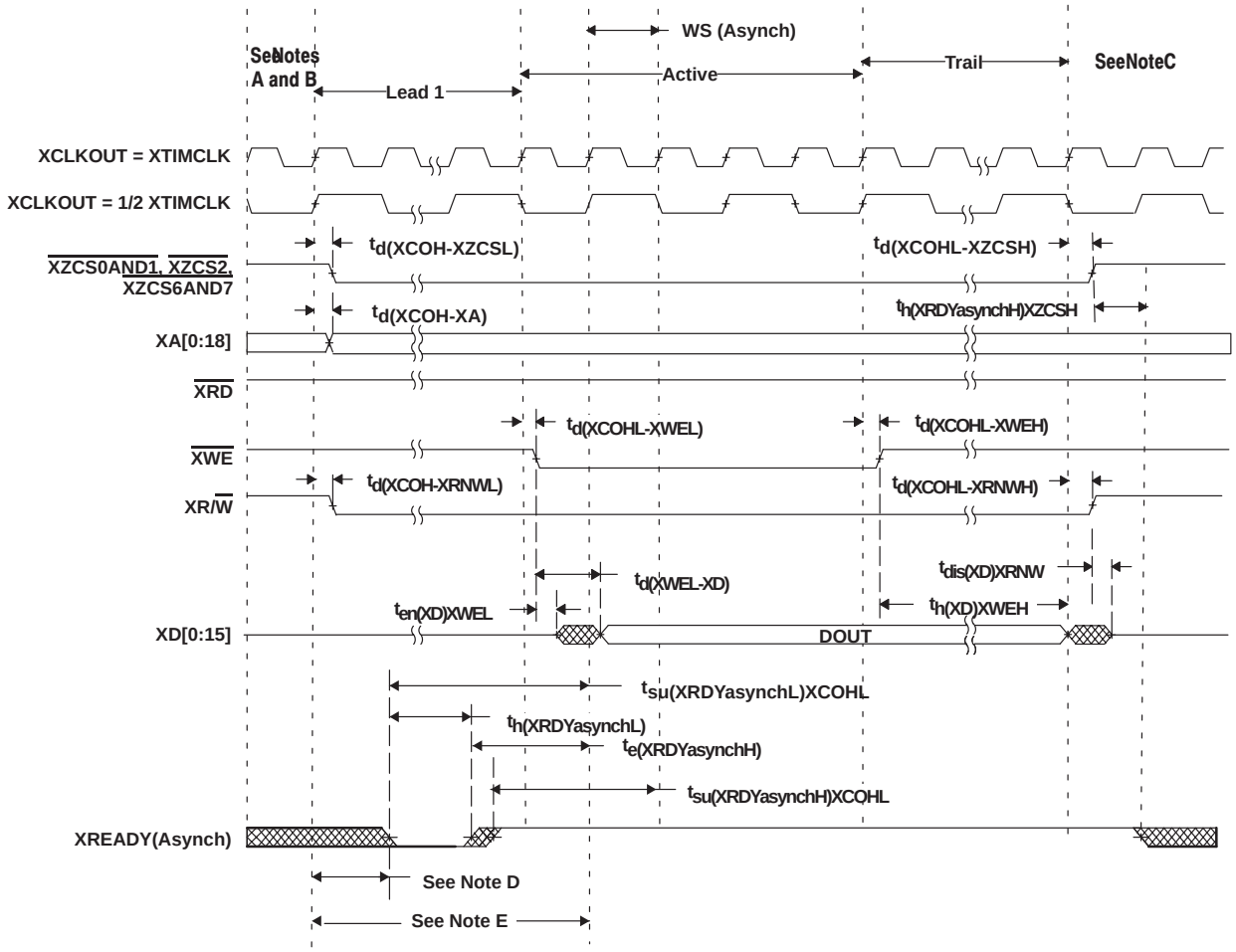

Legend:

▨ = Don't care. Signal can be high or low during this time.

NOTES: A. All XINTF accesses (lead period) begin on the rising edge of XCLKOUT. When necessary, the device will insert an alignment cycle before an access to meet this requirement.

B. During alignment cycles, all signals will transition to their inactive state.

C. During inactive cycles, the XINTF address bus will always hold the last address put out on the bus. This includes alignment cycles.

D. For each sample, setup time from the beginning of the access can be calculated as:
$D = (XWRLEAD + XWRACTIVE - 3 + n)\ t_{c(XTIM)} - t_{su(XRDYasynchL)XCOHL}$
where n is the sample number: n = 1, 2, 3 and so forth.

E. Reference for the first sample is with respect to this point
$E = (XWRLEAD + XWRACTIVE - 2)\ t_{c(XTIM)}$

Figure 6−32. Write With Asynchronous XREADY Access

XTIMING register parameters used for this example:

XRDLEAD	XRDACTIVE	XRDTRAIL	USEREADY	X2TIMING	XWRLEAD	XWRACTIVE	XWRTRAIL	READYMODE
N/A†	N/A†	N/A†	1	0	≥1	3	≥1	1 = XREADY (Asynch)

† N/A = "Don't care" for this example

6.27 XHOLD and XHOLDA

If the HOLD mode bit is set while XHOLD and XHOLDA are both low (external bus accesses granted), the XHOLDA signal is forced high (at the end of the current cycle) and the external interface is taken out of high-impedance mode.

On a reset (XRS), the HOLD mode bit is set to 0. If the XHOLD signal is active low on a system reset, the bus and all signal strobes must be in high-impedance mode, and the XHOLDA signal is also driven active low.

When HOLD mode is enabled and XHOLDA is active low (external bus grant active), the CPU can still execute code from internal memory. If an access is made to the external interface, the CPU is stalled until the XHOLD signal is removed.

An external DMA request, when granted, places the following signals in a high-impedance mode:

XA[18:0]	XZCS0AND1
XD[15:0]	XZCS2
XWE, XRD	XZCS6AND7
XR/W	

All other signals not listed in this group remain in their default or functional operational modes during these signal events.

6.28 $\overline{\text{XHOLD}}$/$\overline{\text{XHOLDA}}$ Timing

Table 6−39. $\overline{\text{XHOLD}}$/$\overline{\text{XHOLDA}}$ Timing Requirements (XCLKOUT = XTIMCLK)†‡

		MIN	MAX	UNIT
$t_{d(HL-HiZ)}$	Delay time, $\overline{\text{XHOLD}}$ low to Hi-Z on all Address, Data, and Control		$4t_{c(XTIM)}$	ns
$t_{d(HL-HAL)}$	Delay time, $\overline{\text{XHOLD}}$ low to $\overline{\text{XHOLDA}}$ low		$5t_{c(XTIM)}$	ns
$t_{d(HH-HAH)}$	Delay time, $\overline{\text{XHOLD}}$ high to $\overline{\text{XHOLDA}}$ high		$3t_{c(XTIM)}$	ns
$t_{d(HH-BV)}$	Delay time, $\overline{\text{XHOLD}}$ high to Bus valid		$4t_{c(XTIM)}$	ns

† When a low signal is detected on $\overline{\text{XHOLD}}$, all pending XINTF accesses will be completed before the bus is placed in a high-impedance state.
‡ The state of $\overline{\text{XHOLD}}$ is latched on the rising edge of XTIMCLK.

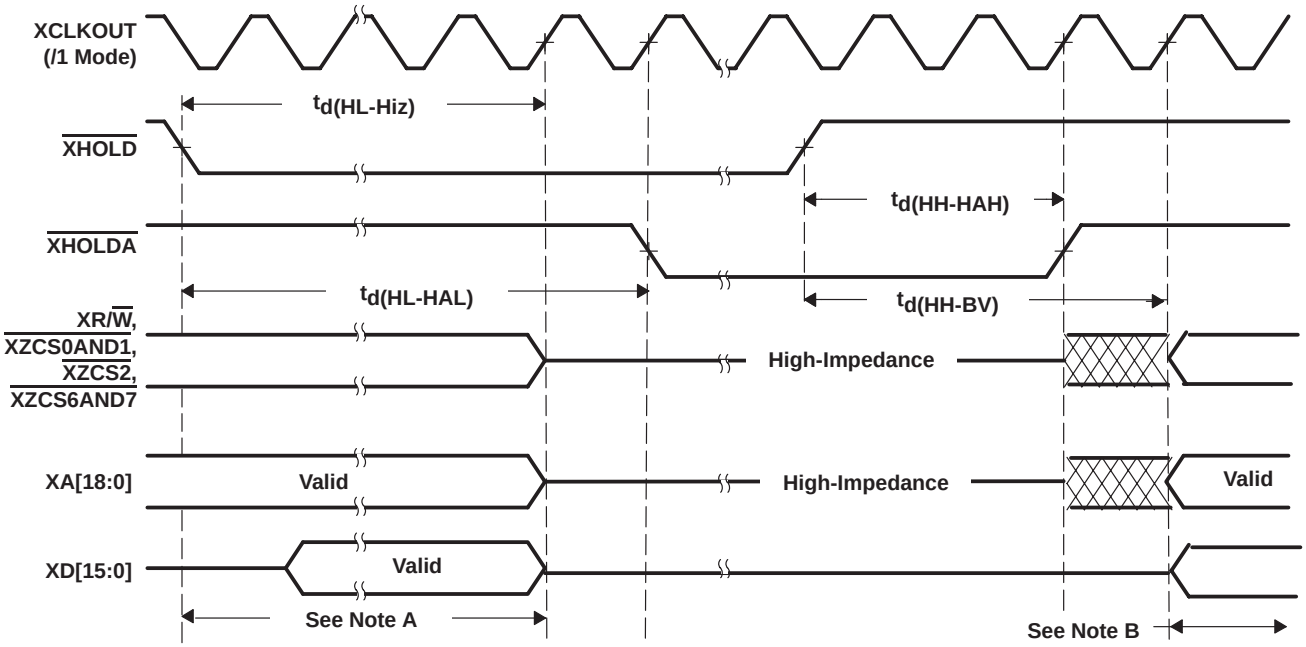

NOTES: A. All pending XINTF accesses are completed.
B. Normal XINTF operation resumes.

Figure 6−33. External Interface Hold Waveform

Table 6−40. $\overline{\text{XHOLD}}$/$\overline{\text{XHOLDA}}$ Timing Requirements (XCLKOUT = 1/2 XTIMCLK)†‡§

		MIN	MAX	UNIT
$t_{d(HL-HiZ)}$	Delay time, $\overline{\text{XHOLD}}$ low to Hi-Z on all Address, Data, and Control		$4t_{c(XTIM)}+t_{c(XCO)}$	ns
$t_{d(HL-HAL)}$	Delay time, $\overline{\text{XHOLD}}$ low to $\overline{\text{XHOLDA}}$ low		$4t_{c(XTIM}+2t_{c(XCO)}$	ns
$t_{d(HH-HAH)}$	Delay time, $\overline{\text{XHOLD}}$ high to $\overline{\text{XHOLDA}}$ high		$4t_{c(XTIM)}$	ns
$t_{d(HH-BV)}$	Delay time, $\overline{\text{XHOLD}}$ high to Bus valid		$6t_{c(XTIM)}$	ns

† When a low signal is detected on $\overline{\text{XHOLD}}$, all pending XINTF accesses will be completed before the bus is placed in a high-impedance state.
‡ The state of $\overline{\text{XHOLD}}$ is latched on the rising edge of XTIMCLK.
§ After the $\overline{\text{XHOLD}}$ is detected low or high, all bus transitions and $\overline{\text{XHOLDA}}$ transitions will occur with respect to the rising edge of XCLKOUT. Thus, for this mode where XCLKOUT = 1/2 XTIMCLK, the transitions can occur up to 1 XTIMCLK cycle earlier than the maximum value specified.

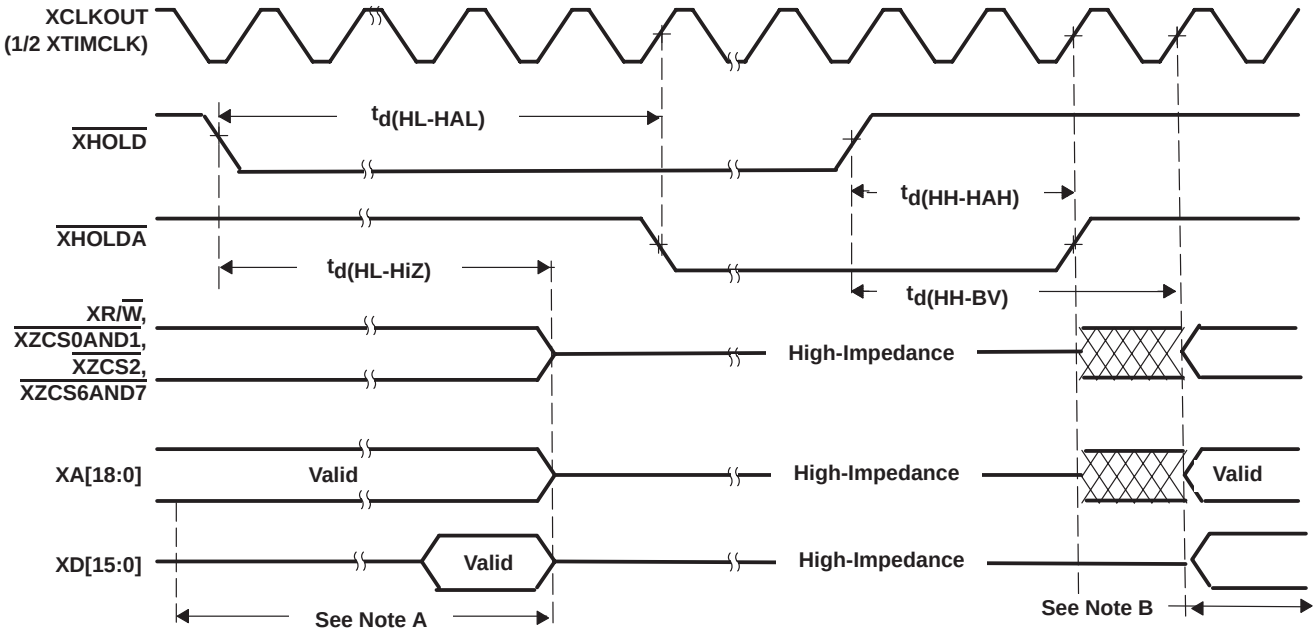

NOTES: A All pending XINTF accesses are completed.
B Normal XINTF operation resumes.

Figure 6−34. $\overline{\text{XHOLD}}$/$\overline{\text{XHOLDA}}$ Timing Requirements (XCLKOUT = 1/2 XTIMCLK)

6.29 On-Chip Analog-to-Digital Converter

6.29.1 ADC Absolute Maximum Ratings†

Supply voltage range, V_{SSA1}/V_{SSA2} to $V_{DDA1}/V_{DDA2}/AV_{DDREFBG}$ . . . . . −0.3 V to 4.6 V

V_{SS1} to V_{DD1} . . . . . −0.3 V to 2.5 V

Analog Input (ADCIN) Clamp Current, total (max) . . . . . ± 20 mA‡

† Unless otherwise noted, the list of absolute maximum ratings are specified over operating conditions. Stresses beyond those listed under Absolute Maximum Ratings may cause permanent damage to the device. These are stress ratings only. Exposure to absolute-maximum-rated conditions for extended periods may affect device reliability.

‡ The analog inputs have an internal clamping circuit that clamps the voltage to a diode drop above V_{DDA} or below V_{SS}. The continuous clamp current per pin is ± 2 mA.

6.29.2 ADC Electrical Characteristics Over Recommended Operating Conditions

Table 6−41. DC Specifications (See Note 1)

PARAMETER		MIN	TYP	MAX	UNIT
Resolution		12			Bits
ADC clock (See Note 2)		1			kHz
				25	MHz
ACCURACY					
INL (Integral nonlinearity)				±1.5	LSB
DNL (Differential nonlinearity)				±1	LSB
Offset error (See Note 3)		−80		80	LSB
Overall gain error with internal reference (See Note 4)		−80		80	LSB
Overall gain error with external reference (See Note 5)	If ADCREFP-ADCREFM = 1 V ±0.1%	−50		50	LSB
Channel-to-channel offset variation			±8		LSB
Channel-to-channel Gain variation			±8		LSB
ANALOG INPUT					
Analog input voltage (ADCINx to ADCLO) (See Note 6)		0		3	V
ADCLO		−5	0	5	mV
Input capacitance			10		pF
Input leakage current			3	±5	µA
INTERNAL VOLTAGE REFERENCE (See Note 4)					
Accuracy, $ADCV_{REFP}$		1.9	2	2.1	V
Accuracy, $ADCV_{REFM}$		0.95	1	1.05	V
Voltage difference, ADCREFP - ADCREFM			1		V
Temperature coefficient			50		PPM/°C
Reference noise			100		µV
EXTERNAL VOLTAGE REFERENCE (See Note 5)					
Accuracy, $ADCV_{REFP}$		1.9	2	2.1	V
Accuracy, $ADCV_{REFM}$		0.95	1	1.05	V
Input voltage difference, ADCREFP - ADCREFM		0.99	1	1.01	V

NOTES: 1. Tested at 12.5-MHz ADCCLK
2. If SYSCLKOUT ≤ 25 MHz, ADC clock ≤ SYSCLKOUT/2
3. 1 LSB has the weighted value of 3.0/4096 = 0.732 mV.
4. A single tirmmed internal band gap reference sources both ADCREFP and ADCREFM signals, and hence, these voltages track together. The ADC converter uses the difference between these two as its reference. The total gain error will be the combination of the gain error shown here and the voltage reference accuracy (ADCREFP - ADCREFM). A software-based calibration procedure is recommended for better accuracy. See *F2812 ADC Calibration Application Note* (literature number SPRA989) and Section 5.2, Documentation Support, for relevant documents.
5. In this mode, the accuracy of external reference is critical for overall gain. The voltage difference (ADCREFP-ADCREFM) will determine the overall accuracy.
6. Voltages above V_{DDA} + 0.3 V or below V_{SS} - 0.3 V applied to an analog input pin may temporarily affect the conversion of another pin. To avoid this, the analog inputs should be kept within these limits.

Table 6−42. AC Specifications

PARAMETER		MIN	TYP	MAX	UNIT
SINAD	Signal-to-noise ratio + distortion		64		dB
SNR	Signal-to-noise ratio		66		dB
THD (100 kHz)	Total harmonic distortion		−68		dB
ENOB (SNR)	Effective number of bits		10.7		Bits
SFDR	Spurious free dynamic range		70		dB

6.29.3 Current Consumption for Different ADC Configurations (at 25-MHz ADCCLK)‡

I_{DDA} (TYP)§	I_{DDAIO} (TYP)	I_{DD1} (TYP)	ADC OPERATING MODE/CONDITIONS
40 mA	1 μA	0.5 mA	Mode A (Operational Mode): − BG and REF enabled − PWD disabled
7 mA	0	5 μA	Mode B: − ADC clock enabled − BG and REF enabled − PWD enabled
1 μA	0	5 μA	Mode C: − ADC clock enabled − BG and REF disabled − PWD enabled
1 μA	0	0	Mode D: − ADC clock disabled − BG and REF disabled − PWD enabled

‡ Test Conditions: SYSCLKOUT = 150 MHz
ADC module clock = 25 MHz
ADC performing a continuous conversion of all 16 channels in Mode A

§ I_{DDA} − includes current into V_{DDA1} / V_{DDA2} and $AV_{DDREFBG}$

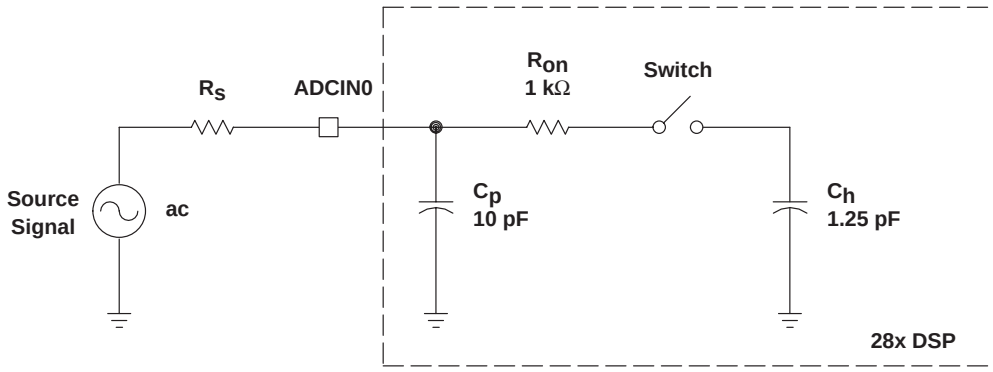

Typical Values of the Input Circuit Components:

Switch Resistance (R_{on}): 1 kΩ
Sampling Capacitor (C_h): 1.25 pF
Parasitic Capacitance (C_p): 10 pF
Source Resistance (R_S): 50 Ω

Figure 6−35. ADC Analog Input Impedance Model

6.29.4 ADC Power-Up Control Bit Timing

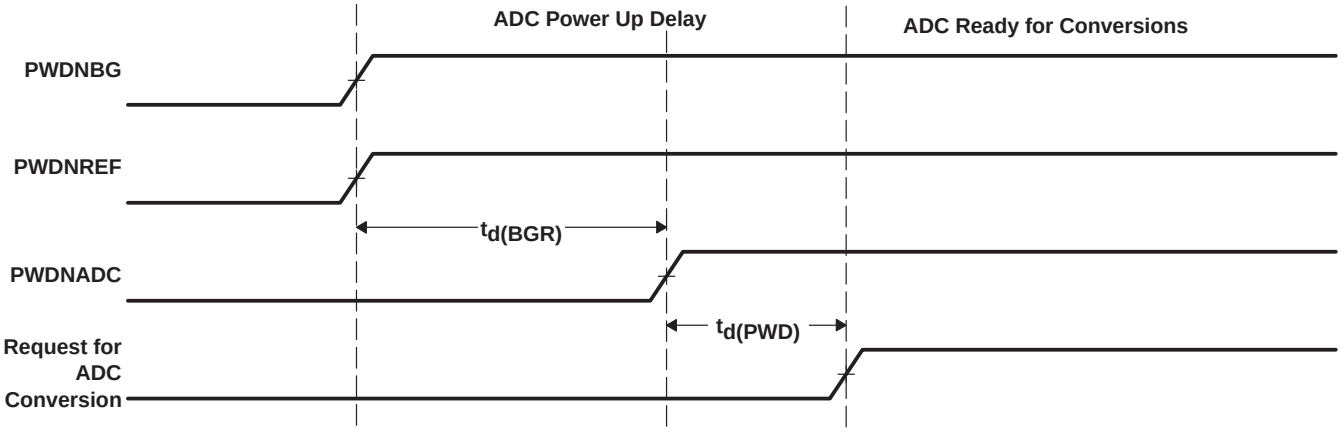

Figure 6−36. ADC Power-Up Control Bit Timing

Table 6−43. ADC Power-Up Delays†

		MIN	TYP	MAX	UNIT
$t_{d(BGR)}$	Delay time for band gap reference to be stable. Bits 7 and 6 of the ADCTRL3 register (ADCBGRFDN1/0) are to be set to 1 before the ADCPWDN bit is enabled.	7	8	10	ms
$t_{d(PWD)}$	Delay time for power-down control to be stable. Bit 5 of the ADCTRL3 register (ADCPWDN) is to be set to 1 before any ADC conversions are initiated.	20	50		µs
				1	ms

† These delays are necessary and recommended to make the ADC analog reference circuit stable before conversions are initiated. If conversions are started without these delays, the ADC results will show a higher gain. For power down, all three bits can be cleared at the same time.

6.29.5 Detailed Description

6.29.5.1 Reference Voltage

The on-chip ADC has a built-in reference, which provides the reference voltages for the ADC. ADCVREFP is set to 2.0 V and ADCVREFM is set to 1.0 V.

6.29.5.2 Analog Inputs

The on-chip ADC consists of 16 analog inputs, which are sampled either one at a time or two channels at a time. These inputs are software-selectable.

6.29.5.3 Converter

The on-chip ADC uses a 12-bit four-stage pipeline architecture, which achieves a high sample rate with low power consumption.

6.29.5.4 Conversion Modes

The conversion can be performed in two different conversion modes:

- Sequential sampling mode (SMODE = 0)
- Simultaneous sampling mode (SMODE = 1)

6.29.6 Sequential Sampling Mode (Single-Channel) (SMODE = 0)

In sequential sampling mode, the ADC can continuously convert input signals on any of the channels (Ax to Bx). The ADC can start conversions on event triggers from the Event Managers (EVA/EVB), software trigger, or from an external ADCSOC signal. If the SMODE bit is 0, the ADC will do conversions on the selected channel on every Sample/Hold pulse. The conversion time and latency of the Result register update are explained below. The ADC interrupt flags are set a few SYSCLKOUT cycles after the Result register update. The selected channels will be sampled at every falling edge of the Sample/Hold pulse. The Sample/Hold pulse width can be programmed to be 1 ADC clock wide (minimum) or 16 ADC clocks wide (maximum).

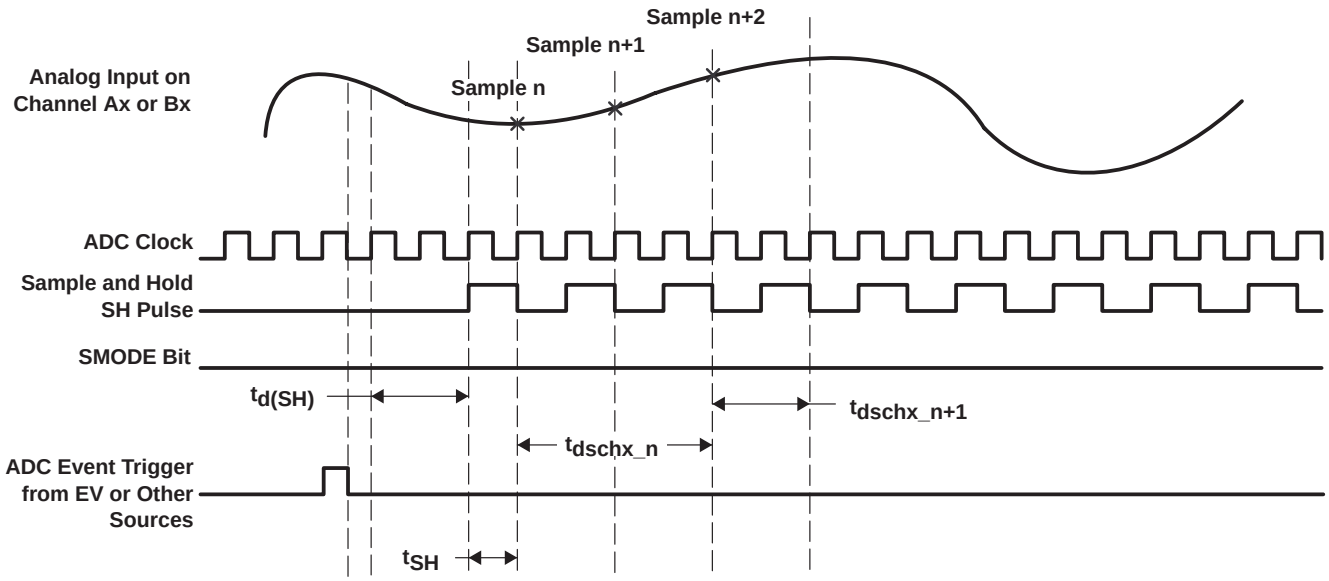

Figure 6−37. Sequential Sampling Mode (Single-Channel) Timing

Table 6−44. Sequential Sampling Mode Timing

		SAMPLE n	SAMPLE n + 1	AT 25-MHz ADC CLOCK, $t_{c(ADCCLK)}$ = 40 ns	REMARKS
$t_{d(SH)}$	Delay time from event trigger to sampling	$2.5t_{c(ADCCLK)}$			
t_{SH}	Sample/Hold width/ Acquisition width	(1 + Acqps) * $t_{c(ADCCLK)}$		40 ns with Acqps = 0	Acqps value = 0-15 ADCTRL1[8:11]
$t_{d(schx_n)}$	Delay time for first result to appear in the Result register	$4t_{c(ADCCLK)}$		160 ns	
$t_{d(schx_n+1)}$	Delay time for successive results to appear in the Result register		(2 + Acqps) * $t_{c(ADCCLK)}$	80 ns	

6.29.7 Simultaneous Sampling Mode (Dual-Channel) (SMODE = 1)

In simultaneous mode, the ADC can continuously convert input signals on any one pair of channels (A0/B0 to A7/B7). The ADC can start conversions on event triggers from the Event Managers (EVA/EVB), software trigger, or from an external ADCSOC signal. If the SMODE bit is 1, the ADC will do conversions on two selected channels on every Sample/Hold pulse. The conversion time and latency of the Result register update are explained below. The ADC interrupt flags are set a few SYSCLKOUT cycles after the Result register update. The selected channels will be sampled simultaneously at the falling edge of the Sample/Hold pulse. The Sample/Hold pulse width can be programmed to be 1 ADC clock wide (minimum) or 16 ADC clocks wide (maximum).

NOTE: In Simultaneous mode, the ADCIN channel pair select has to be A0/B0, A1/B1, ..., A7/B7, and *not* in other combinations (such as A1/B3, etc.).

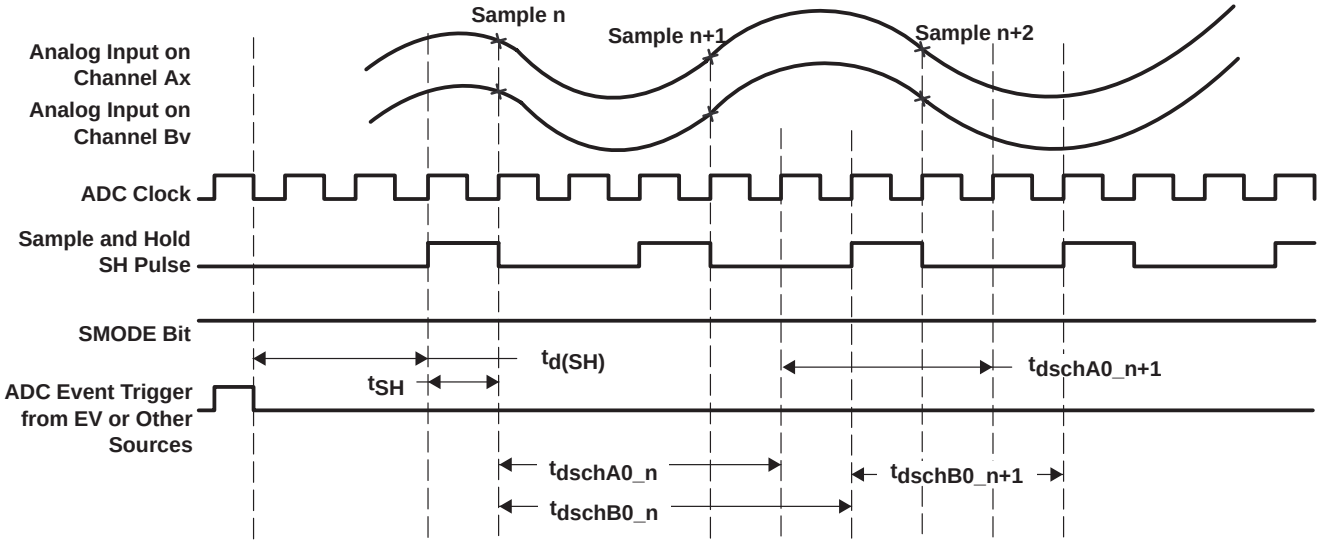

Figure 6−38. Simultaneous Sampling Mode Timing

Table 6−45. Simultaneous Sampling Mode Timing

		SAMPLE n	SAMPLE n + 1	AT 25-MHz ADC CLOCK, $t_{c(ADCCLK)}$ = 40 ns	REMARKS
$t_{d(SH)}$	Delay time from event trigger to sampling	$2.5t_{c(ADCCLK)}$			
t_{SH}	Sample/Hold width/ Acquisition Width	(1 + Acqps) * $t_{c(ADCCLK)}$		40 ns with Acqps = 0	Acqps value = 0-15 ADCTRL1[8:11]
$t_{d(schA0_n)}$	Delay time for first result to appear in Result register	$4t_{c(ADCCLK)}$		160 ns	
$t_{d(schB0_n)}$	Delay time for first result to appear in Result register	$5t_{c(ADCCLK)}$		200 ns	
$t_{d(schA0_n+1)}$	Delay time for successive results to appear in Result register		(3 + Acqps) * $t_{c(ADCCLK)}$	120 ns	
$t_{d(schB0_n+1)}$	Delay time for successive results to appear in Result register		(3 + Acqps) * $t_{c(ADCCLK)}$	120 ns	

6.29.8 Definitions of Specifications and Terminology

Integral Nonlinearity

Integral nonlinearity refers to the deviation of each individual code from a line drawn from zero through full scale. The point used as zero occurs 1/2 LSB before the first code transition. The full-scale point is defined as level 1/2 LSB beyond the last code transition. The deviation is measured from the center of each particular code to the true straight line between these two points.

Differential Nonlinearity

An ideal ADC exhibits code transitions that are exactly 1 LSB apart. DNL is the deviation from this ideal value. A differential nonlinearity error of less than ±1 LSB ensures no missing codes.

Zero Offset

The major carry transition should occur when the analog input is at zero volts. Zero error is defined as the deviation of the actual transition from that point.

Gain Error

The first code transition should occur at an analog value 1/2 LSB above negative full scale. The last transition should occur at an analog value 1 1/2 LSB below the nominal full scale. Gain error is the deviation of the actual difference between first and last code transitions and the ideal difference between first and last code transitions.

Signal-to-Noise Ratio + Distortion (SINAD)

SINAD is the ratio of the rms value of the measured input signal to the rms sum of all other spectral components below the Nyquist frequency, including harmonics but excluding dc. The value for SINAD is expressed in decibels.

Effective Number of Bits (ENOB)

For a sine wave, SINAD can be expressed in terms of the number of bits. Using the following formula,

$$N = \frac{(SINAD - 1.76)}{6.02}$$

it is possible to get a measure of performance expressed as N, the effective number of bits. Thus, effective number of bits for a device for sine wave inputs at a given input frequency can be calculated directly from its measured SINAD.

Total Harmonic Distortion (THD)

THD is the ratio of the rms sum of the first six harmonic components to the rms value of the measured input signal and is expressed as a percentage or in decibels.

Spurious Free Dynamic Range (SFDR)

SFDR is the difference in dB between the rms amplitude of the input signal and the peak spurious signal.

6.30 Multichannel Buffered Serial Port (McBSP) Timing

6.30.1 McBSP Transmit and Receive Timing

Table 6−46. McBSP Timing Requirements†‡

NO.				MIN	MAX	UNIT
	McBSP module clock (CLKG, CLKX, CLKR) range			1		kHz
					20§	MHz
	McBSP module cycle time (CLKG, CLKX, CLKR) range			50		ns
					1	ms
M11	$t_{c(CKRX)}$	Cycle time, CLKR/X	CLKR/X ext	2P		ns
M12	$t_{w(CKRX)}$	Pulse duration, CLKR/X high or CLKR/X low	CLKR/X ext	P-7		ns
M13	$t_{r(CKRX)}$	Rise time, CLKR/X	CLKR/X ext		7	ns
M14	$t_{f(CKRX)}$	Fall time, CLKR/X	CLKR/X ext		7	ns
M15	$t_{su(FRH-CKRL)}$	Setup time, external FSR high before CLKR low	CLKR int	18		ns
			CLKR ext	2		
M16	$t_{h(CKRL-FRH)}$	Hold time, external FSR high after CLKR low	CLKR int	0		ns
			CLKR ext	6		
M17	$t_{su(DRV-CKRL)}$	Setup time, DR valid before CLKR low	CLKR int	18		ns
			CLKR ext	2		
M18	$t_{h(CKRL-DRV)}$	Hold time, DR valid after CLKR low	CLKR int	0		ns
			CLKR ext	6		
M19	$t_{su(FXH-CKXL)}$	Setup time, external FSX high before CLKX low	CLKX int	18		ns
			CLKX ext	2		
M20	$t_{h(CKXL-FXH)}$	Hold time, external FSX high after CLKX low	CLKX int	0		ns
			CLKX ext	6		

† Polarity bits CLKRP = CLKXP = FSRP = FSXP = 0. If the polarity of any of the signals is inverted, then the timing references of that signal are also inverted.

‡ 2P = 1/CLKG in ns. CLKG is the output of sample rate generator mux. CLKG = $\frac{\text{CLKSRG}}{(1 + \text{CLKGDV})}$.

CLKSRG can be LSPCLK, CLKX, CLKR as source. CLKSRG ≤ (SYSCLKOUT/2). McBSP performance is limited by I/O buffer switching speed.

§ Internal clock prescalers must be adjusted such that the McBSP clock (CLKG, CLKX, CLKR) speeds are not greater than the I/O buffer speed limit (20 MHz).

Table 6−47. McBSP Switching Characteristics†‡

NO.	PARAMETER				MIN	MAX	UNIT
M1	$t_{c(CKRX)}$	Cycle time, CLKR/X		CLKR/X int	2P		ns
M2	$t_{w(CKRXH)}$	Pulse duration, CLKR/X high		CLKR/X int	D-5§	D+5§	ns
M3	$t_{w(CKRXL)}$	Pulse duration, CLKR/X low		CLKR/X int	C-5§	C+5§	ns
M4	$t_{d(CKRH-FRV)}$	Delay time, CLKR high to internal FSR valid		CLKR int	0	4	ns
				CLKR ext	3	27	ns
M5	$t_{d(CKXH-FXV)}$	Delay time, CLKX high to internal FSX valid		CLKX int	0	4	ns
				CLKX ext	3	27	
M6	$t_{dis(CKXH-DXHZ)}$	Disable time, CLKX high to DX high impedance following last data bit		CLKX int		8	ns
				CLKX ext		14	
M7	$t_{d(CKXH-DXV)}$	Delay time, CLKX high to DX valid. This applies to all bits except the first bit transmitted.		CLKX int		9	ns
				CLKX ext		28	
		Delay time, CLKX high to DX valid	DXENA = 0	CLKX int		8	
				CLKX ext		14	
		Only applies to first bit transmitted when in Data Delay 1 or 2 (XDATDLY=01b or 10b) modes	DXENA = 1	CLKX int		P + 8	
				CLKX ext		P + 14	
M8	$t_{en(CKXH-DX)}$	Enable time, CLKX high to DX driven	DXENA = 0	CLKX int	0		ns
				CLKX ext	6		
		Only applies to first bit transmitted when in Data Delay 1 or 2 (XDATDLY=01b or 10b) modes	DXENA = 1	CLKX int	P		
				CLKX ext	P + 6		
M9	$t_{d(FXH-DXV)}$	Delay time, FSX high to DX valid	DXENA = 0	FSX int		8	ns
				FSX ext		14	
		Only applies to first bit transmitted when in Data Delay 0 (XDATDLY=00b) mode.	DXENA = 1	FSX int		P + 8	
				FSX ext		P + 14	
M10	$t_{en(FXH-DX)}$	Enable time, FSX high to DX driven	DXENA = 0	FSX int	0		ns
				FSX ext	6		
		Only applies to first bit transmitted when in Data Delay 0 (XDATDLY=00b) mode	DXENA = 1	FSX int	P		
				FSX ext	P + 6		

† Polarity bits CLKRP = CLKXP = FSRP = FSXP = 0. If the polarity of any of the signals is inverted, then the timing references of that signal are also inverted.
‡ 2P = 1/CLKG in ns.
§ C=CLKRX low pulse width = P
D=CLKRX high pulse width = P

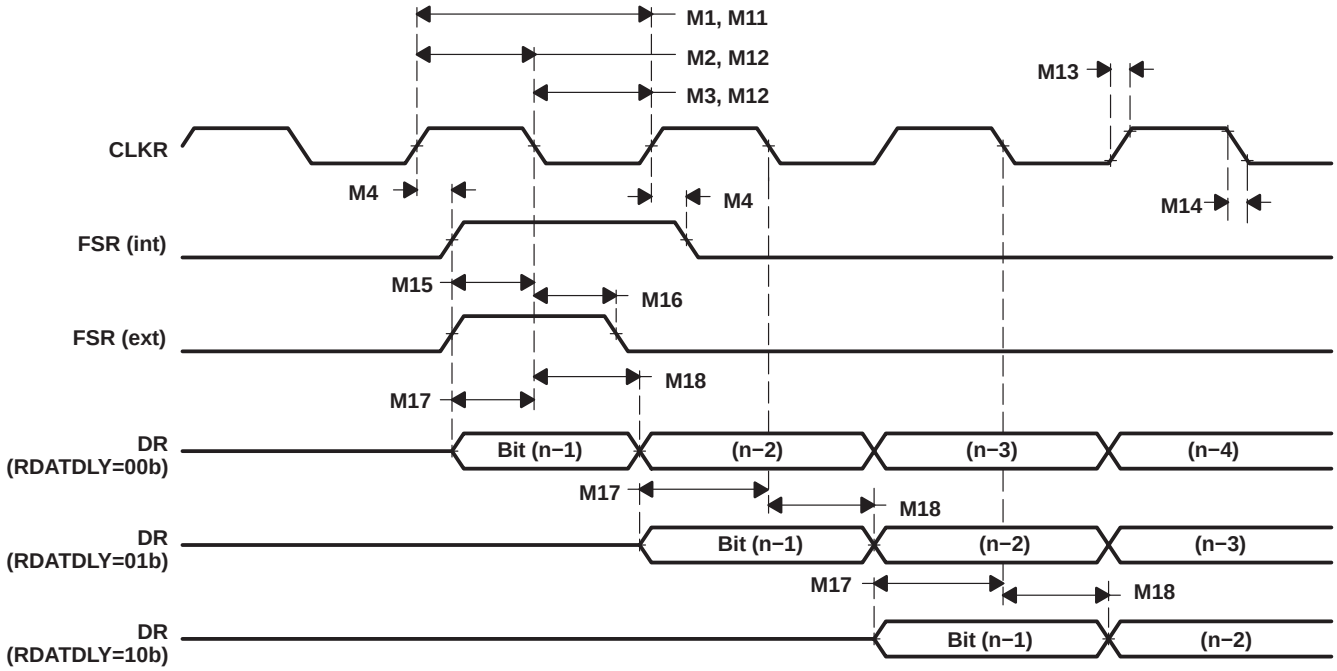

Figure 6−39. McBSP Receive Timing

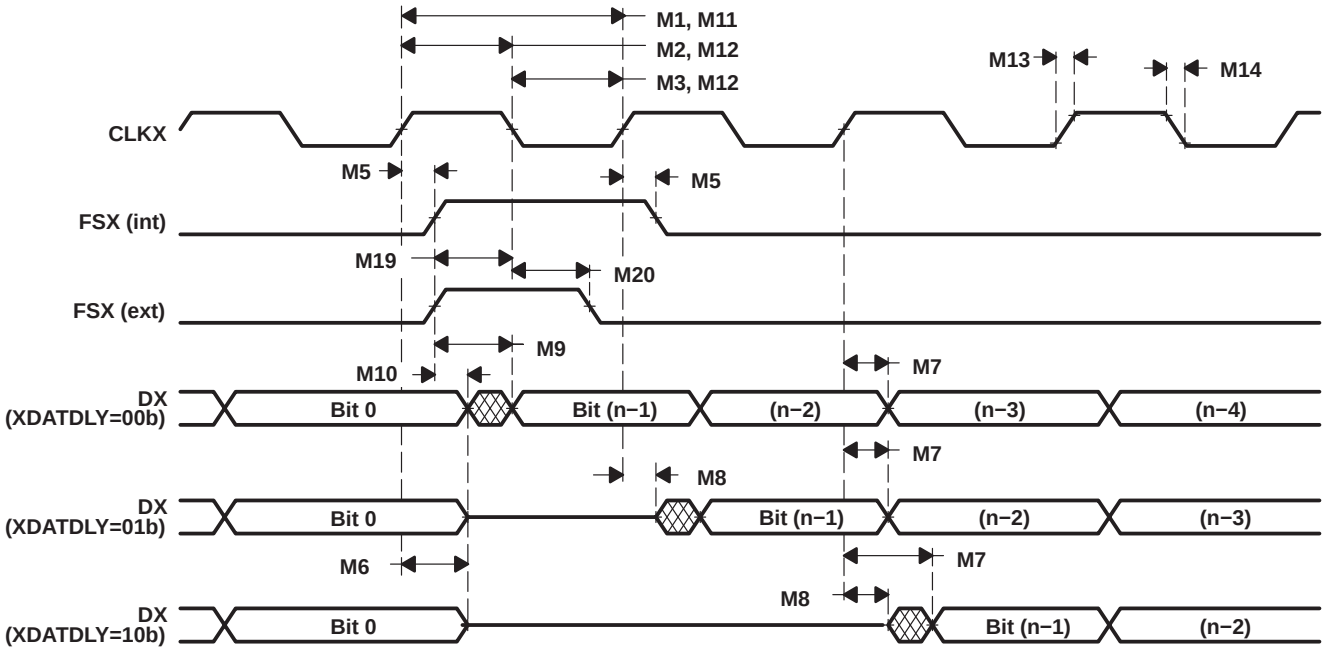

Figure 6−40. McBSP Transmit Timing

6.30.2 McBSP as SPI Master or Slave Timing

Table 6−48. McBSP as SPI Master or Slave Timing Requirements (CLKSTP = 10b, CLKXP = 0)

NO.			MASTER		SLAVE		UNIT
			MIN	MAX	MIN	MAX	
M30	$t_{su(DRV-CKXL)}$	Setup time, DR valid before CLKX low	P-10		8P-10		ns
M31	$t_{h(CKXL-DRV)}$	Hold time, DR valid after CLKX low	P-10		8P-10		ns
M32	$t_{su(BFXL-CKXH)}$	Setup time, FSX low before CLKX high			8P+10		ns
M33	$t_{c(CKX)}$	Cycle time, CLKX	2P		16P		ns

Table 6−49. McBSP as SPI Master or Slave Switching Characteristics (CLKSTP = 10b, CLKXP = 0)†

NO.	PARAMETER		MASTER		SLAVE		UNIT
			MIN	MAX	MIN	MAX	
M24	$t_{h(CKXL-FXL)}$	Hold time, FSX low after CLKX low	2P				ns
M25	$t_{d(FXL-CKXH)}$	Delay time, FSX low to CLKX high	P				ns
M28	$t_{dis(FXH-DXHZ)}$	Disable time, DX high impedance following last data bit from FSX high	6		6P + 6		ns
M29	$t_{d(FXL-DXV)}$	Delay time, FSX low to DX valid	6		4P + 6		ns

† 2P = 1/CLKG

For all SPI slave modes, CLKX has to be minimum 8 CLKG cycles. Also CLKG should be LSPCLK/2 by setting CLKSM = CLKGDV = 1. With maximum LSPCLK speed of 75 MHz, CLKX maximum frequency will be LSPCLK/16 , that is 4.5 MHz and P =13.3 ns.

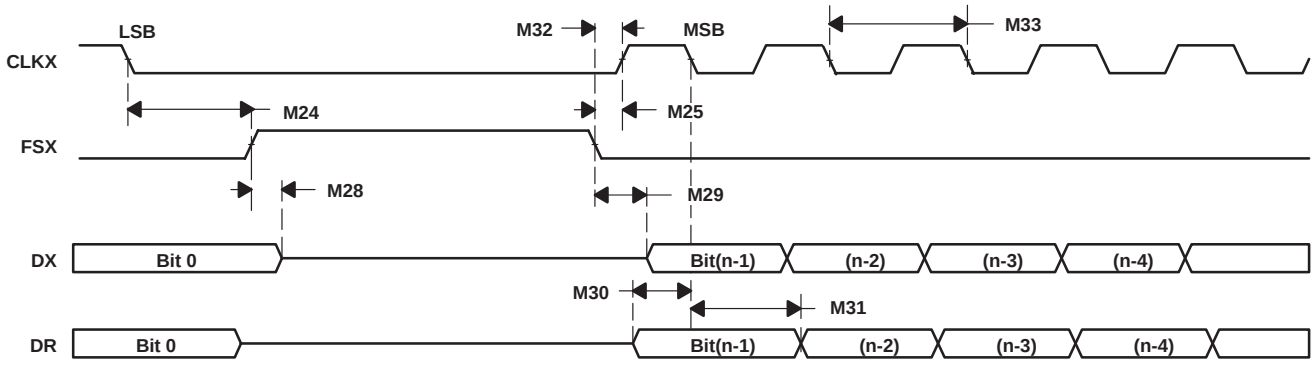

Figure 6−41. McBSP Timing as SPI Master or Slave: CLKSTP = 10b, CLKXP = 0

Table 6−50. McBSP as SPI Master or Slave Timing Requirements (CLKSTP = 11b, CLKXP = 0)†

NO.			MASTER		SLAVE		UNIT
			MIN	MAX	MIN	MAX	
M39	$t_{su(DRV-CKXH)}$	Setup time, DR valid before CLKX high	P-10		8P-10		ns
M40	$t_{h(CKXH-DRV)}$	Hold time, DR valid after CLKX high	P-10		8P-10		ns
M41	$t_{su(FXL-CKXH)}$	Setup time, FSX low before CLKX high			16P+10		ns
M42	$t_{c(CKX)}$	Cycle time, CLKX	2P		16P		ns

Table 6−51. McBSP as SPI Master or Slave Switching Characteristics (CLKSTP = 11b, CLKXP = 0)†

NO.	PARAMETER		MASTER		SLAVE		UNIT
			MIN	MAX	MIN	MAX	
M34	$t_{h(CKXL-FXL)}$	Hold time, FSX low after CLKX low	P				ns
M35	$t_{d(FXL-CKXH)}$	Delay time, FSX low to CLKX high	2P				ns
M37	$t_{dis(CKXL-DXHZ)}$	Disable time, DX high impedance following last data bit from CLKX low	P + 6		7P+6		ns
M38	$t_{d(FXL-DXV)}$	Delay time, FSX low to DX valid	6		4P + 6		ns

† 2P = 1/CLKG

For all SPI slave modes, CLKX has to be minimum 8 CLKG cycles. Also CLKG should be LSPCLK/2 by setting CLKSM = CLKGDV = 1. With maximum LSPCLK speed of 75 MHz, CLKX maximum frequency will be LSPCLK/16 , that is 4.5 MHz and P =13.3 ns.

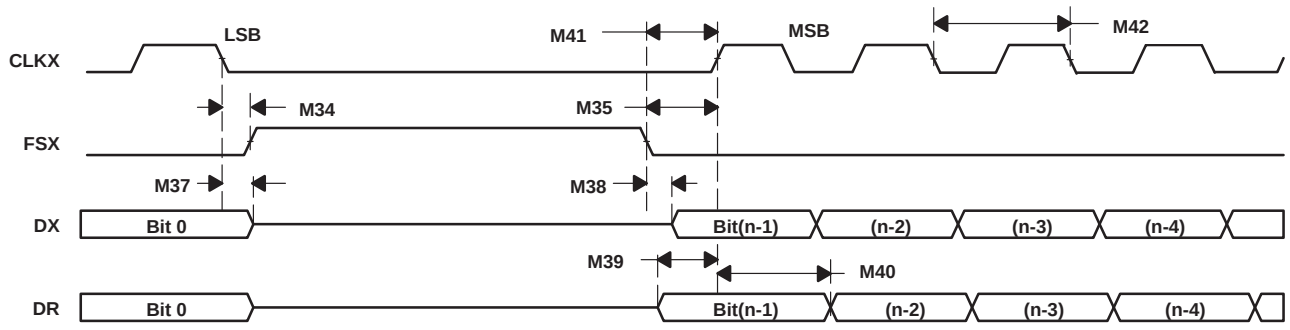

Figure 6−42. McBSP Timing as SPI Master or Slave: CLKSTP = 11b, CLKXP = 0

Table 6−52. McBSP as SPI Master or Slave Timing Requirements (CLKSTP = 10b, CLKXP = 1)†

NO.			MASTER		SLAVE		UNIT
			MIN	MAX	MIN	MAX	
M49	$t_{su(DRV-CKXH)}$	Setup time, DR valid before CLKX high	P-10		8P-10		ns
M50	$t_{h(CKXH-DRV)}$	Hold time, DR valid after CLKX high	P-10		8P-10		ns
M51	$t_{su(FXL-CKXL)}$	Setup time, FSX low before CLKX low			8P+10		ns
M52	$t_{c(CKX)}$	Cycle time, CLKX	2P		16P		ns

Table 6−53. McBSP as SPI Master or Slave Switching Characteristics (CLKSTP = 10b, CLKXP = 1)†

NO.	PARAMETER		MASTER		SLAVE		UNIT
			MIN	MAX	MIN	MAX	
M43	$t_{h(CKXH-FXL)}$	Hold time, FSX low after CLKX high	2P				ns
M44	$t_{d(FXL-CKXL)}$	Delay time, FSX low to CLKX low	P				ns
M47	$t_{dis(FXH-DXHZ)}$	Disable time, DX high impedance following last data bit from FSX high	6		6P + 6		ns
M48	$t_{d(FXL-DXV)}$	Delay time, FSX low to DX valid	6		4P + 6		ns

† 2P = 1/CLKG

For all SPI slave modes, CLKX has to be minimum 8 CLKG cycles. Also CLKG should be LSPCLK/2 by setting CLKSM = CLKGDV = 1. With maximum LSPCLK speed of 75 MHz, CLKX maximum frequency will be LSPCLK/16 , that is 4.5 MHz and P =13.3 ns.

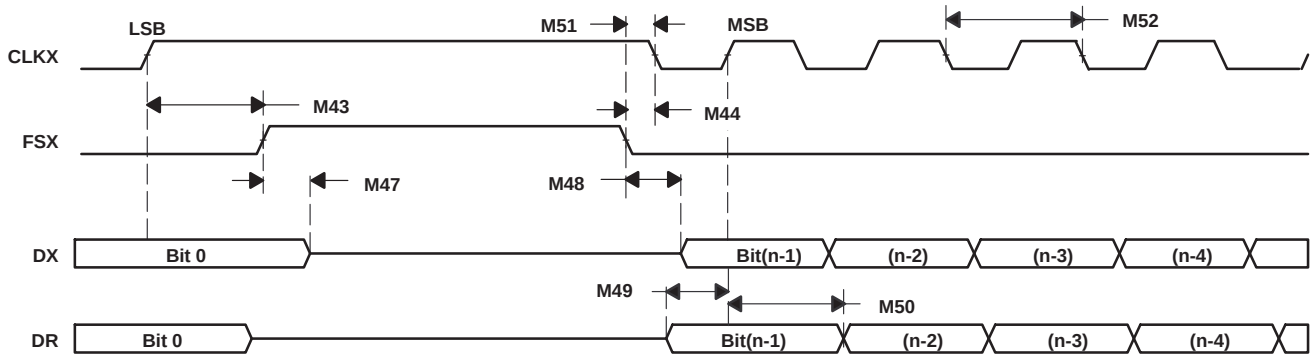

Figure 6−43. McBSP Timing as SPI Master or Slave: CLKSTP = 10b, CLKXP = 1

Table 6−54. McBSP as SPI Master or Slave Timing Requirements (CLKSTP = 11b, CLKXP = 1)†

NO.			MASTER		SLAVE		UNIT
			MIN	MAX	MIN	MAX	
M58	$t_{su(DRV-CKXL)}$	Setup time, DR valid before CLKX low	P - 10		8P - 10		ns
M59	$t_{h(CKXL-DRV)}$	Hold time, DR valid after CLKX low	P - 10		8P - 10		ns
M60	$t_{su(FXL-CKXL)}$	Setup time, FSX low before CLKX low			16P + 10		ns
M61	$t_{c(CKX)}$	Cycle time, CLKX	2P		16P		ns

Table 6−55. McBSP as SPI Master or Slave Switching Characteristics (CLKSTP = 11b, CLKXP = 1)†

NO.	PARAMETER		MASTER‡		SLAVE		UNIT
			MIN	MAX	MIN	MAX	
M53	$t_{h(CKXH-FXL)}$	Hold time, FSX low after CLKX high	P				ns
M54	$t_{d(FXL-CKXL)}$	Delay time, FSX low to CLKX low	2P				ns
M56	$t_{dis(CKXH-DXHZ)}$	Disable time, DX high impedance following last data bit from CLKX high	P+6		7P + 6		ns
M57	$t_{d(FXL-DXV)}$	Delay time, FSX low to DX valid	6		4P + 6		ns

† 2P = 1/CLKG
For all SPI slave modes, CLKX has to be minimum 8 CLKG cycles. Also CLKG should be LSPCLK/2 by setting CLKSM = CLKGDV = 1. With maximum LSPCLK speed of 75 MHz, CLKX maximum frequency will be LSPCLK/16 , that is 4.5 MHz and P =13.3 ns.
‡ C = CLKX low pulse width = P
D = CLKX high pulse width = P

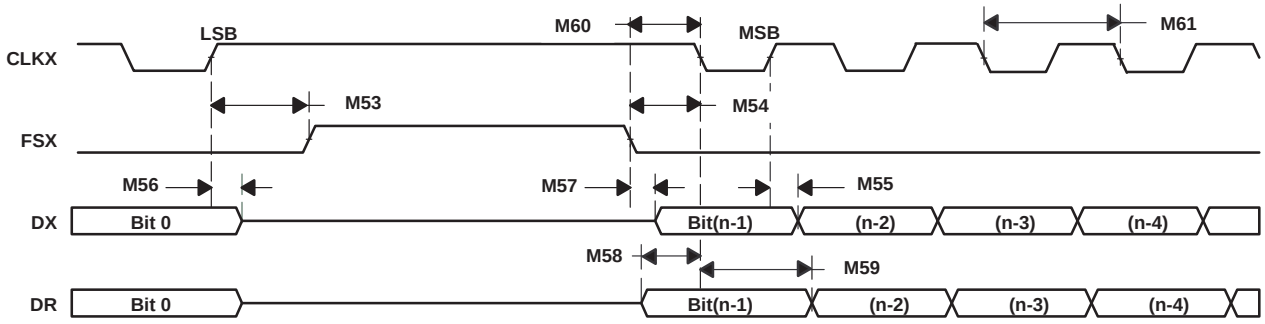

Figure 6−44. McBSP Timing as SPI Master or Slave: CLKSTP = 11b, CLKXP = 1

7 Migration From F281x Devices

Table 6−56 shows the differences between F281x and R281x features. F281x stands for TMS320F2810, TMS320F2811, and TMS320F2812 devices. R281x stands for TMS320R2811 and TMS320R2812 devices.

Table 6−56. Feature Comparison Between F281x and R281x Devices

FEATURES	R2811	F2811	R2812	F2812	R281X MIGRATION CONSIDERATIONS
Instruction cycle (at 150 MHz)	6.67 ns	6.67 ns	6.67 ns	6.67 ns	R281x SARAM execution is single cycle, zero−wait-state at 150 MHz.
Single−access RAM (SARAM) (16−bit word)	20K	18K	20K	18K	Additional 2K words of SARAM −L2/L3 blocks −See section 3.2.7.
Code security feature	Disabled	Selectable	Disabled	Selectable	Code secuirty in R281x affects L0/L1 SARAM. However, CSM password locations are preset as 0xFFFF to facilitate easy unsecuring. See Section 3.2.9.
On−chip non−volatile memory	No	Yes	No	Yes	F281x Flash/OTP space are reserved in R281x devices.
Boot ROM	Yes	Yes	Yes	Yes	Same Boot ROM code as F281x devices.
Flash/OTP Boot ROM	No	Yes	No	Yes	Not available on R281x
SPI−EEPROM boot	Yes	Yes	Yes	Yes	
H0 SARAM boot	Yes	Yes	Yes	Yes	
SCI, Parallel I/O Boot	Yes	Yes	Yes	Yes	
External memory interface	No	No	Yes	Yes	
Event Managers A and B (EVA and EVB)	EVA, EVB	EVA, EVB	EVA, EVB	EVA, EVB	
General−Purpose (GP) timers	4	4	4	4	
Compare (CMP)/PWM	16	16	16	16	
Capture (CAP)/QEP channels	6/2	6/2	6/2	6/2	
Watchdog timer	Yes	Yes	Yes	Yes	
12−Bit ADC	Yes	Yes	Yes	Yes	Internal reference trimmed for gain accuracy. Supports external reference mode as in F281x devices. See Section 4.3.
Channels	16	16	16	16	
32−Bit CPU timers	3	3	3	3	
SPI	Yes	Yes	Yes	Yes	
SCIA, SCIB	SCIA, SCIB	SCIA, SCIB	SCIA, SCIB	SCIA, SCIB	
CAN	Yes	Yes	Yes	Yes	
McBSP	Yes	Yes	Yes	Yes	
Digital I/O pins (shared)	56	56	56	56	
External interrupts	3	3	3	3	
Supply voltage − 1.9 V, 3.3 V, (5%)	150 MHz	150 MHz	150 MHz	150 MHz	

Table 6−56. Feature Comparison Between F281x and R281x Devices (Continued)

FEATURES	R2811	F2811	R2812	F2812	R281X MIGRATION CONSIDERATIONS
Power Sequencing	Not required	Required	Not required	Required	
Supply voltage − 1.8 V, 3.3 V, (5%)	135 MHz	135 MHz	135 MHz	135 MHz	
Power sequencing	Optional	Required	Optional	Required	Power sequencing is optional in R281x devices. See Section 6.7.
Packaging	128−pin	128−pin	179−ball/ 176−pin	179−ball/ 176−pin	
	PBK	PBK	GHH, ZHH, PGF	GHH, ZHH, PGF	Lead−free options in all packages
Temperature options					
A: −40°C to 85°C	Yes	Yes	Yes	Yes	
S/Q: −40°C to 125°C	Yes	Yes	Yes	Yes	
Product status	TMX	TMS	TMX	TMS	
Reference guides	F281x version	F281x version	F281x version	F281x version	See the F281x −CPU and peripheral reference guides listed in Section 5.2 and in the *TMS320F28x Peripherals Reference Guide* (literature number SPRU566).
Code development					
CCS	2.2x or above	2.2x or above	2.2x or above	2.2x or above	
eZdsp			USB version	XDS510PP+	
Emulators	All versions	All versions	All versions	All versions	XDS510/XDS510PP+, XDS510USB or other compatible emulators
C281x C/C++ Header Files and Peripheral Examples (literature number SPRC097)	Rev.1.0	Rev.1.0	Rev.1.0	Rev.1.0	Use DSP281x C/C++−header files rev 1.0 or later. Disable or remove sections that are not applicable to R281x, such as Flash and OTP.

8 Mechanical Data

Table 7−1 through Table 7−4 provide the thermal resistance characteristics for the various packages.

Table 7−1. Thermal Resistance Characteristics for 179-GHH

PARAMETER	179-GHH PACKAGE	UNIT
Psi_{JT}	0.658	°C/W
Θ_{JA}	42.57	°C/W
Θ_{JC}	16.08	°C/W

Table 7−2. Thermal Resistance Characteristics for 179-ZHH

PARAMETER	179-ZHH PACKAGE	UNIT
Psi_{JT}	0.658	°C/W
Θ_{JA}	42.57	°C/W
Θ_{JC}	16.08	°C/W

Table 7−3. Thermal Resistance Characteristics for 176-PGF

PARAMETER	176-PGF PACKAGE	UNIT
Psi_{JT}	0.247	°C/W
Θ_{JA}	41.88	°C/W
Θ_{JC}	9.73	°C/W

Table 7−4. Thermal Resistance Characteristics for 128-PBK

PARAMETER	128-PBK PACKAGE	UNIT
Psi_{JT}	0.271	°C/W
Θ_{JA}	41.65	°C/W
Θ_{JC}	10.76	°C/W

The following mechanical package diagram(s) reflect the most current released mechanical data available for the designated device(s).

PACKAGING INFORMATION

Orderable Device	Status (1)	Package Type	Package Drawing	Pins	Package Qty	Eco Plan (2)	Lead finish/ Ball material (6)	MSL Peak Temp (3)	Op Temp (°C)	Device Marking (4/5)	Samples
TMS320R2811PBKA	ACTIVE	LQFP	PBK	128	90	RoHS & Green	NIPDAU	Level-2-260C-1 YEAR	-40 to 85	R2811PBKA TMS320	Samples
TMS320R2812PGFA	ACTIVE	LQFP	PGF	176	40	RoHS & Green	NIPDAU	Level-3-260C-168 HR	-40 to 85	R2812PGFA TMS320	Samples

(1) The marketing status values are defined as follows:
ACTIVE: Product device recommended for new designs.
LIFEBUY: TI has announced that the device will be discontinued, and a lifetime-buy period is in effect.
NRND: Not recommended for new designs. Device is in production to support existing customers, but TI does not recommend using this part in a new design.
PREVIEW: Device has been announced but is not in production. Samples may or may not be available.
OBSOLETE: TI has discontinued the production of the device.

(2) **RoHS:** TI defines "RoHS" to mean semiconductor products that are compliant with the current EU RoHS requirements for all 10 RoHS substances, including the requirement that RoHS substance do not exceed 0.1% by weight in homogeneous materials. Where designed to be soldered at high temperatures, "RoHS" products are suitable for use in specified lead-free processes. TI may reference these types of products as "Pb-Free".
RoHS Exempt: TI defines "RoHS Exempt" to mean products that contain lead but are compliant with EU RoHS pursuant to a specific EU RoHS exemption.
Green: TI defines "Green" to mean the content of Chlorine (Cl) and Bromine (Br) based flame retardants meet JS709B low halogen requirements of <=1000ppm threshold. Antimony trioxide based flame retardants must also meet the <=1000ppm threshold requirement.

(3) MSL, Peak Temp. - The Moisture Sensitivity Level rating according to the JEDEC industry standard classifications, and peak solder temperature.

(4) There may be additional marking, which relates to the logo, the lot trace code information, or the environmental category on the device.

(5) Multiple Device Markings will be inside parentheses. Only one Device Marking contained in parentheses and separated by a "~" will appear on a device. If a line is indented then it is a continuation of the previous line and the two combined represent the entire Device Marking for that device.

(6) Lead finish/Ball material - Orderable Devices may have multiple material finish options. Finish options are separated by a vertical ruled line. Lead finish/Ball material values may wrap to two lines if the finish value exceeds the maximum column width.

Important Information and Disclaimer: The information provided on this page represents TI's knowledge and belief as of the date that it is provided. TI bases its knowledge and belief on information provided by third parties, and makes no representation or warranty as to the accuracy of such information. Efforts are underway to better integrate information from third parties. TI has taken and continues to take reasonable steps to provide representative and accurate information but may not have conducted destructive testing or chemical analysis on incoming materials and chemicals. TI and TI suppliers consider certain information to be proprietary, and thus CAS numbers and other limited information may not be available for release.

In no event shall TI's liability arising out of such information exceed the total purchase price of the TI part(s) at issue in this document sold by TI to Customer on an annual basis.

TRAY

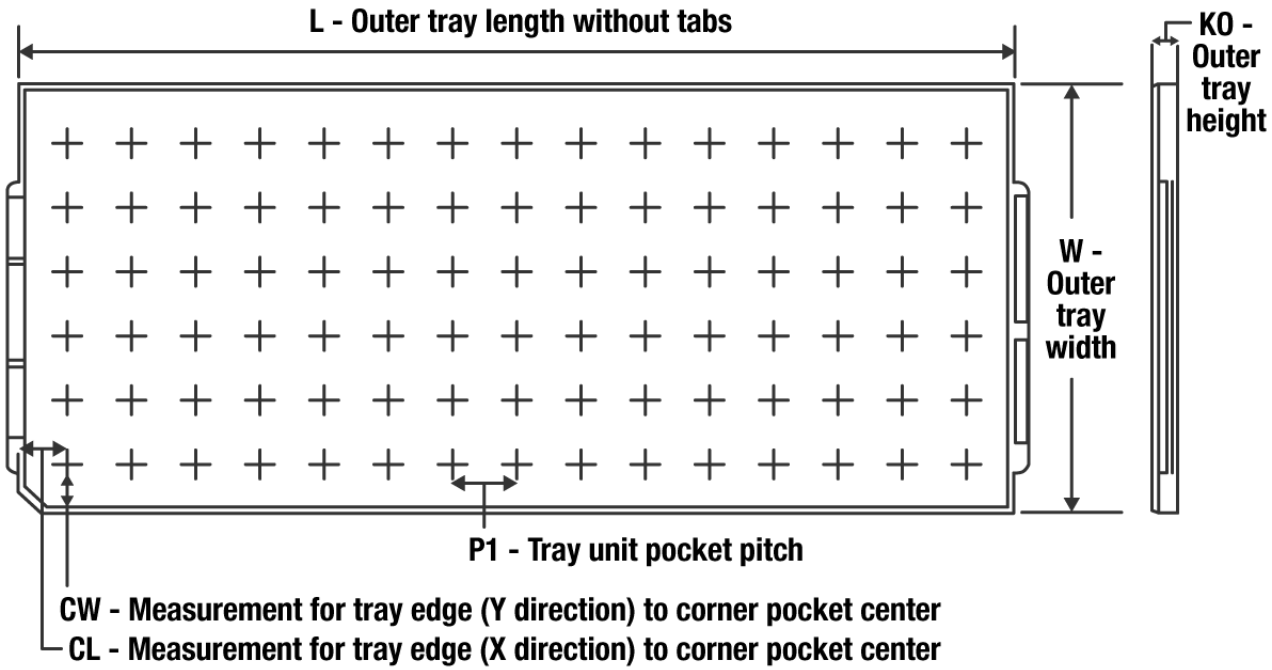

Chamfer on Tray corner indicates Pin 1 orientation of packed units.

*All dimensions are nominal

Device	Package Name	Package Type	Pins	SPQ	Unit array matrix	Max temperature (°C)	L (mm)	W (mm)	K0 (µm)	P1 (mm)	CL (mm)	CW (mm)
TMS320R2811PBKA	PBK	LQFP	128	90	6 x 15	150	315	135.9	7620	20.3	15.4	15.4

PGF 176 LQFP - 1.6 mm max height

PLASTIC QUAD FLATPACK

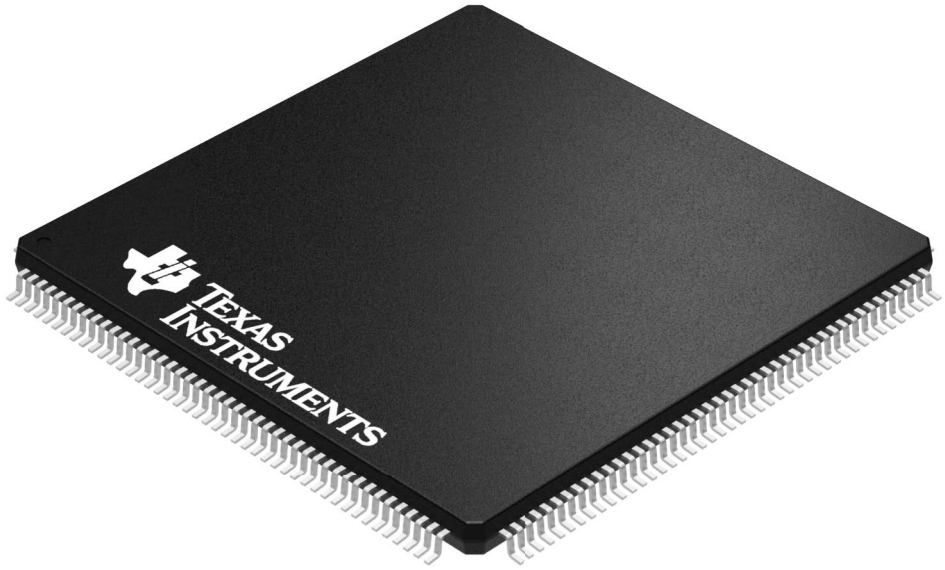

Images above are just a representation of the package family, actual package may vary.
Refer to the product data sheet for package details.

PACKAGE OUTLINE

PGF0176A

LQFP - 1.6 mm max height

PLASTIC QUAD FLATPACK

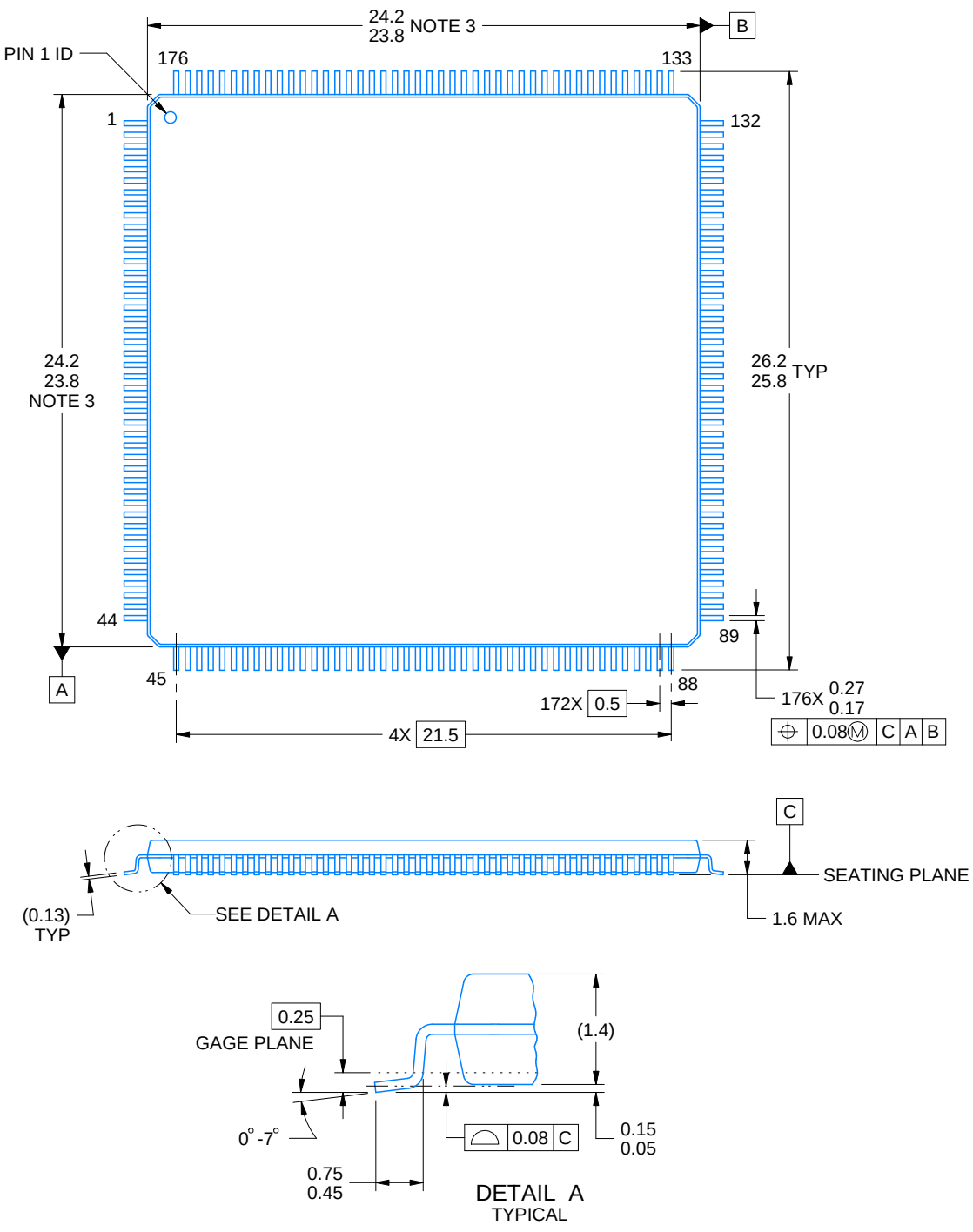

NOTES:

1. All linear dimensions are in millimeters. Any dimensions in parenthesis are for reference only. Dimensioning and tolerancing per ASME Y14.5M.
2. This drawing is subject to change without notice.
3. This dimension does not include mold flash, protrusions, or gate burrs.
4. Reference JEDEC registration MS-026.

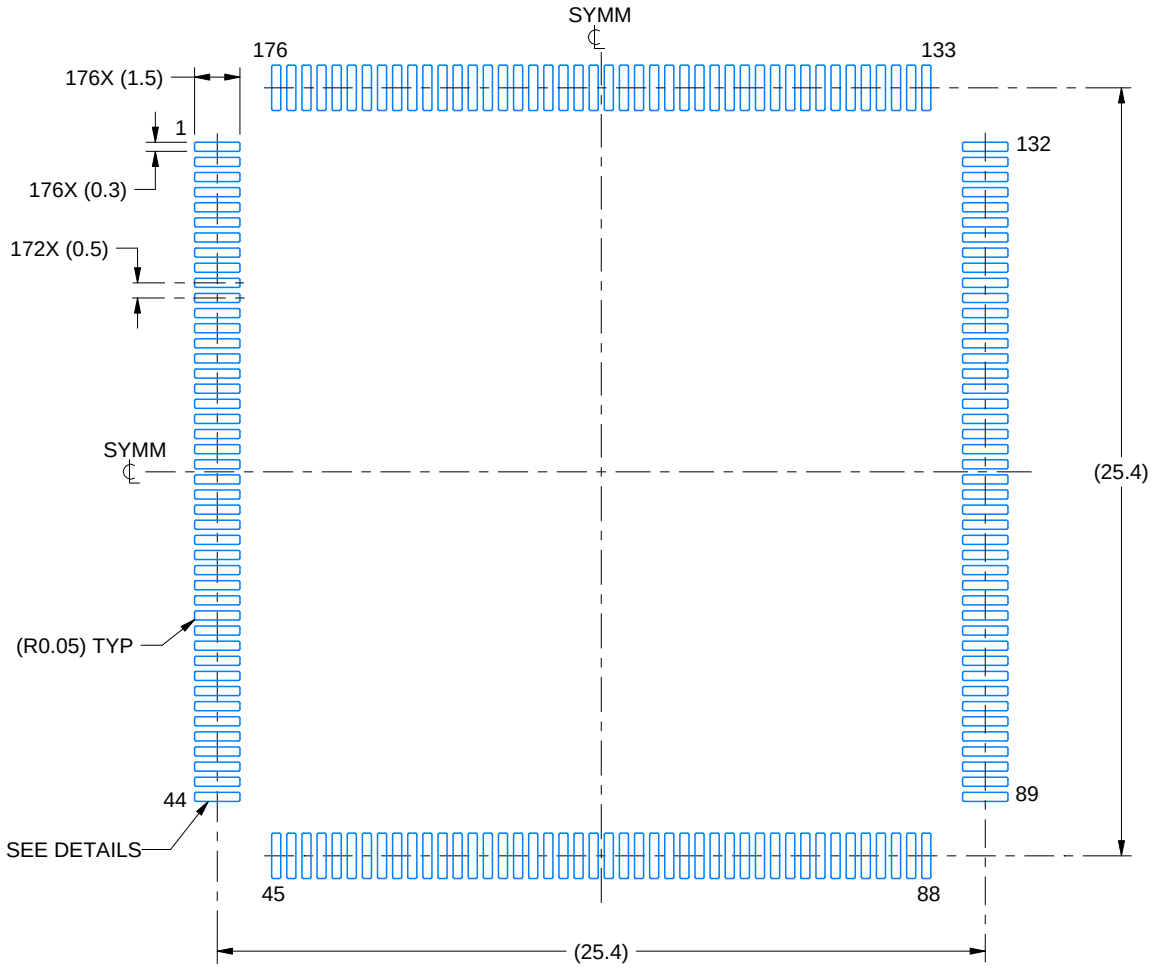

LAND PATTERN EXAMPLE
EXPOSED METAL SHOWN
SCALE:4X

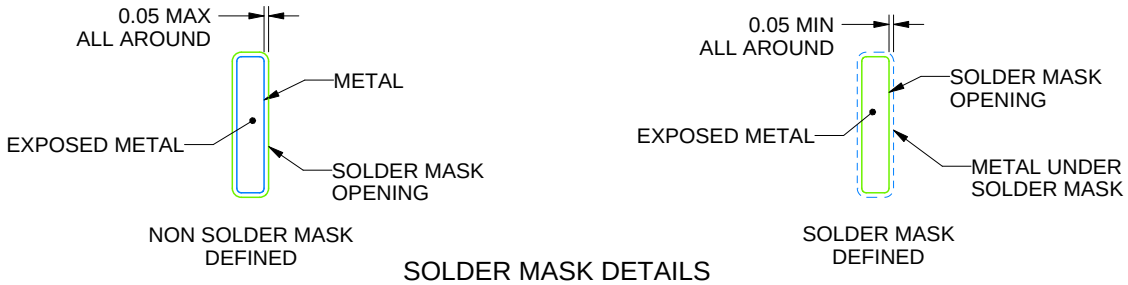

SOLDER MASK DETAILS

4215177/A 05/2017

NOTES: (continued)

5. Publication IPC-7351 may have alternate designs.
6. Solder mask tolerances between and around signal pads can vary based on board fabrication site.

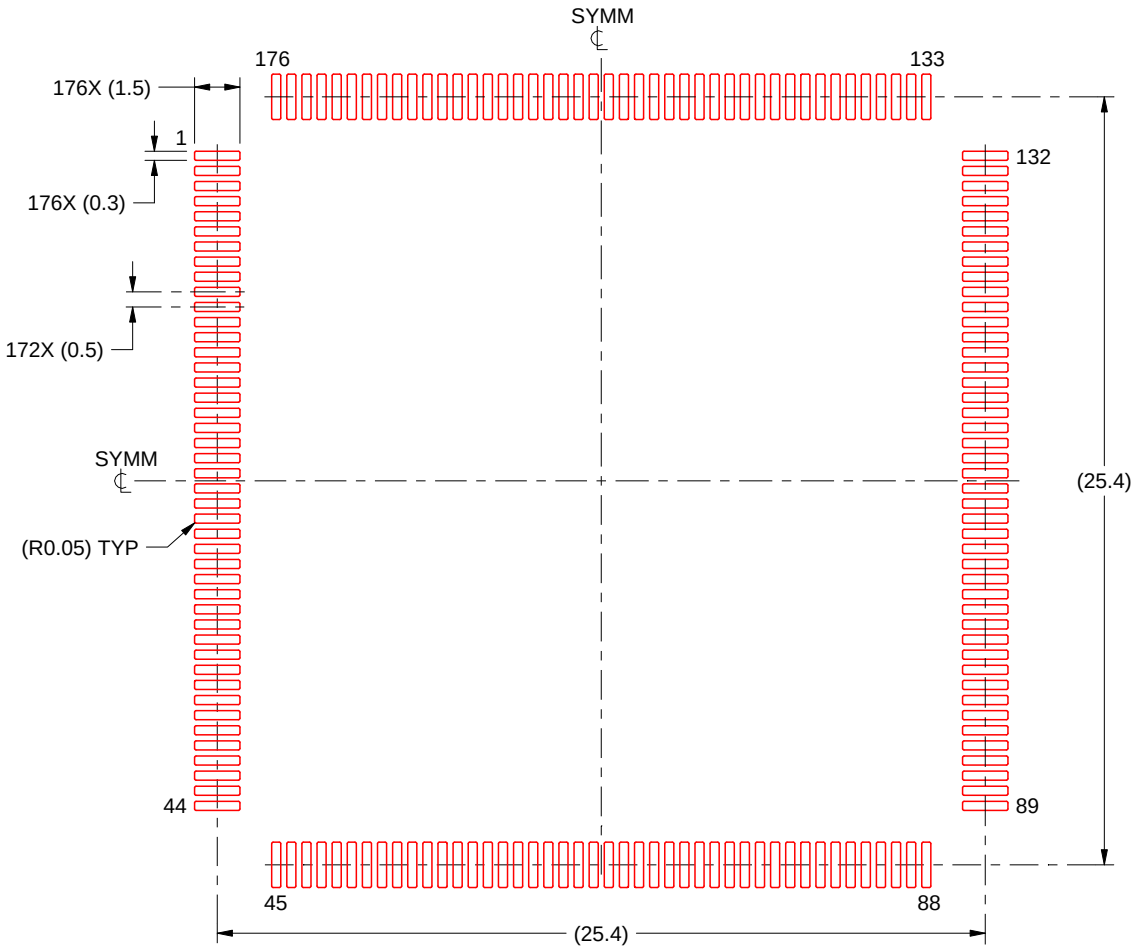

SOLDER PASTE EXAMPLE
BASED ON 0.125 mm THICK STENCIL
SCALE:4X

4215177/A 05/2017

NOTES: (continued)

7. Laser cutting apertures with trapezoidal walls and rounded corners may offer better paste release. IPC-7525 may have alternate design recommendations.
8. Board assembly site may have different recommendations for stencil design.

PBK (S–PQFP–G120) PLASTIC QUAD FLATPACK

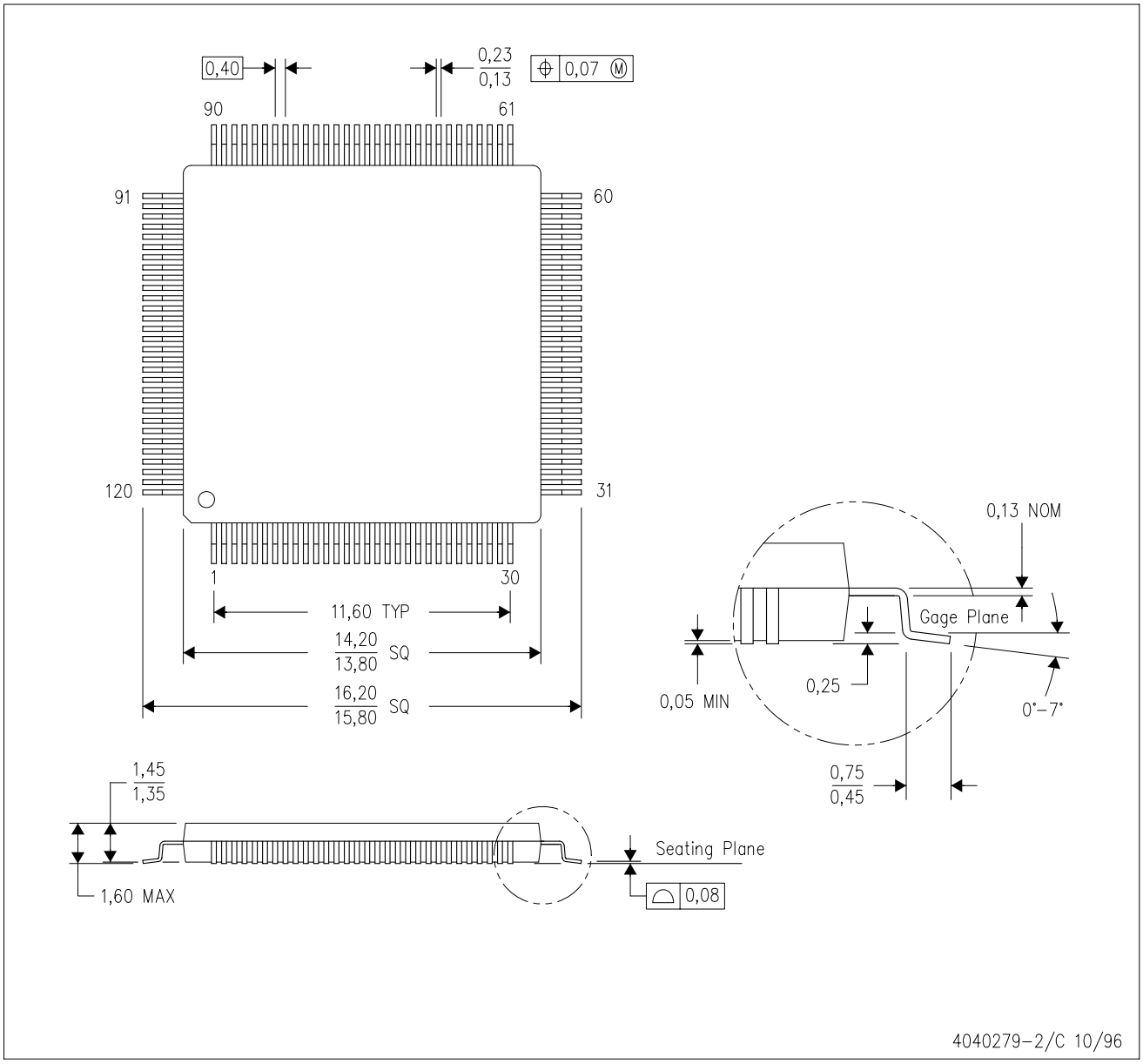

NOTES:
A. All linear dimensions are in millimeters.
B. This drawing is subject to change without notice.
C. Falls within JEDEC MS–026

PACKAGE OUTLINE

ZHH0179A

UBGA - 1.4 mm max height

BALL GRID ARRAY

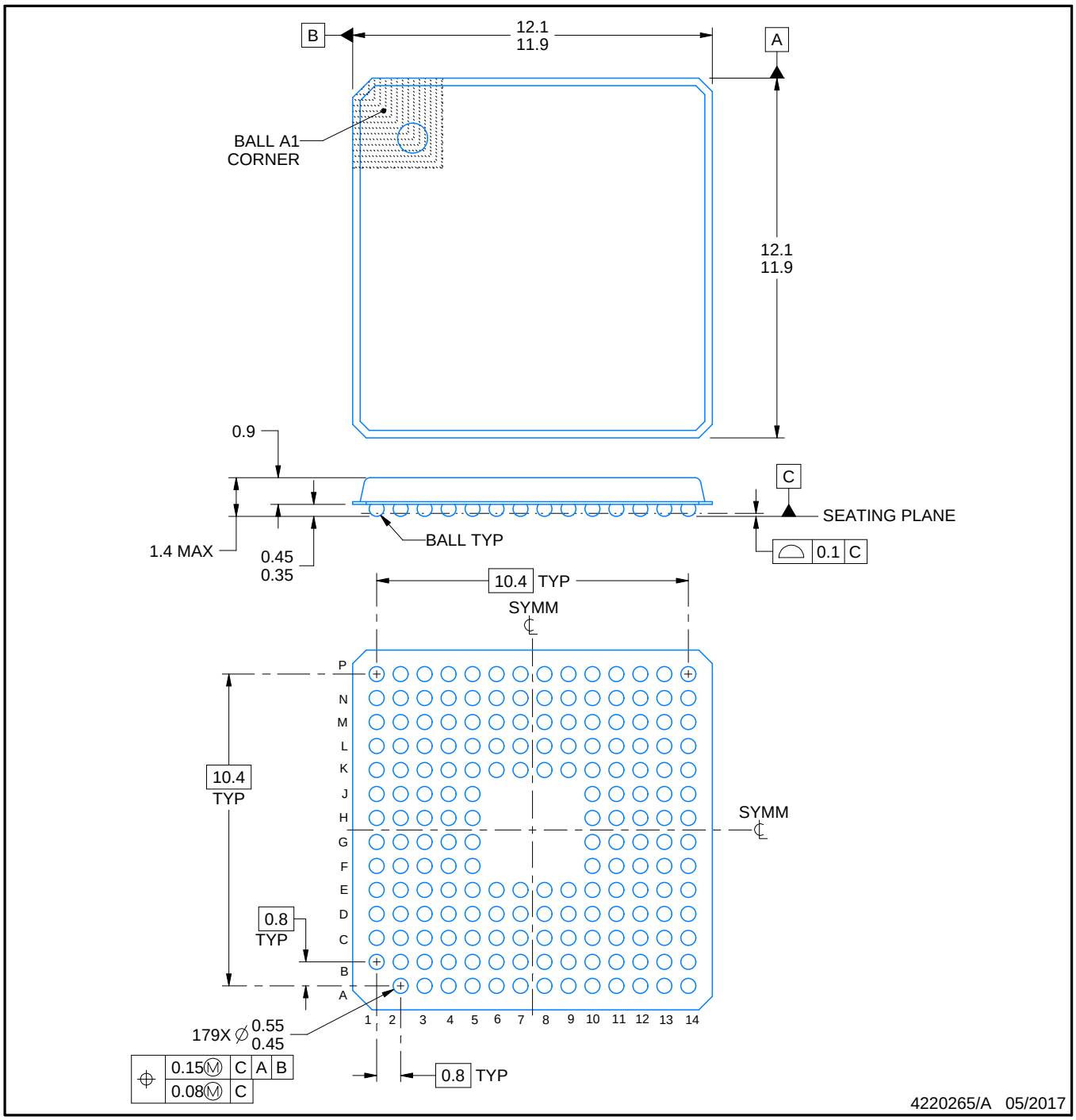

NOTES:

1. All linear dimensions are in millimeters. Any dimensions in parenthesis are for reference only. Dimensioning and tolerancing per ASME Y14.5M.
2. This drawing is subject to change without notice.
3. This is a Pb-free solder ball design.

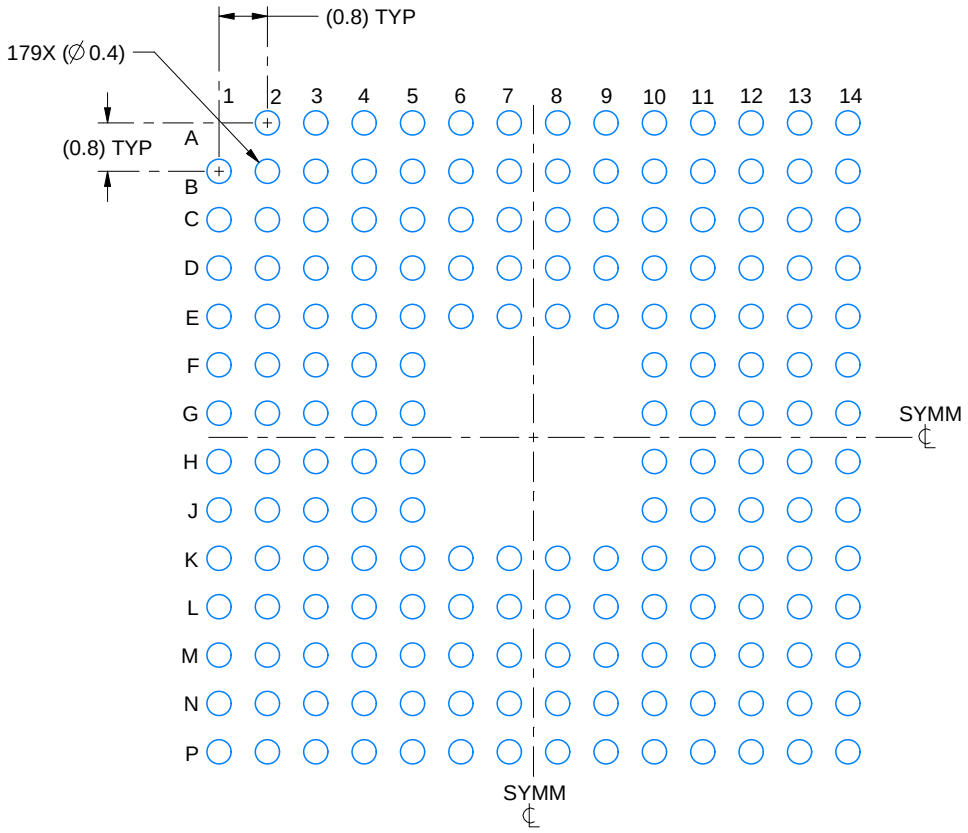

LAND PATTERN EXAMPLE
EXPOSED METAL SHOWN
SCALE: 8X

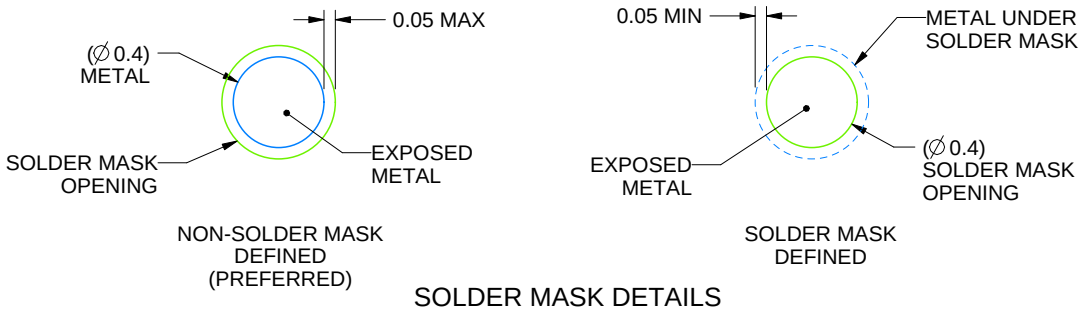

SOLDER MASK DETAILS
NOT TO SCALE

4220265/A 05/2017

NOTES: (continued)

4. Final dimensions may vary due to manufacturing tolerance considerations and also routing constraints.
See Texas Instruments Literature No. SSZA002 (www.ti.com/lit/ssza002).

EXAMPLE STENCIL DESIGN

ZHH0179A

UBGA - 1.4 mm max height

BALL GRID ARRAY

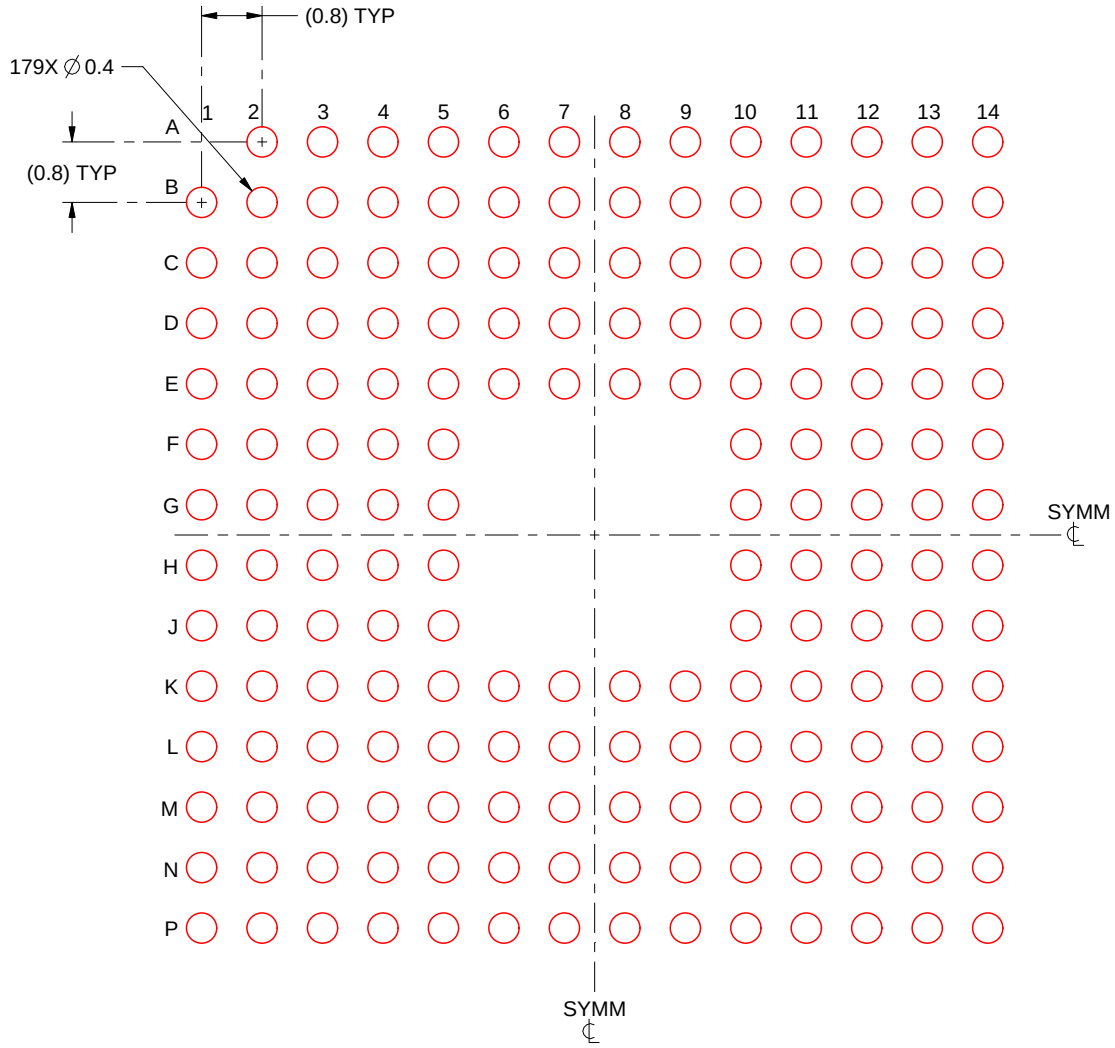

SOLDER PASTE EXAMPLE
BASED ON 0.15 mm THICK STENCIL
SCALE: 10X

4220265/A 05/2017

NOTES: (continued)

5. Laser cutting apertures with trapezoidal walls and rounded corners may offer better paste release.

GHH (S–PBGA–N179) PLASTIC BALL GRID ARRAY

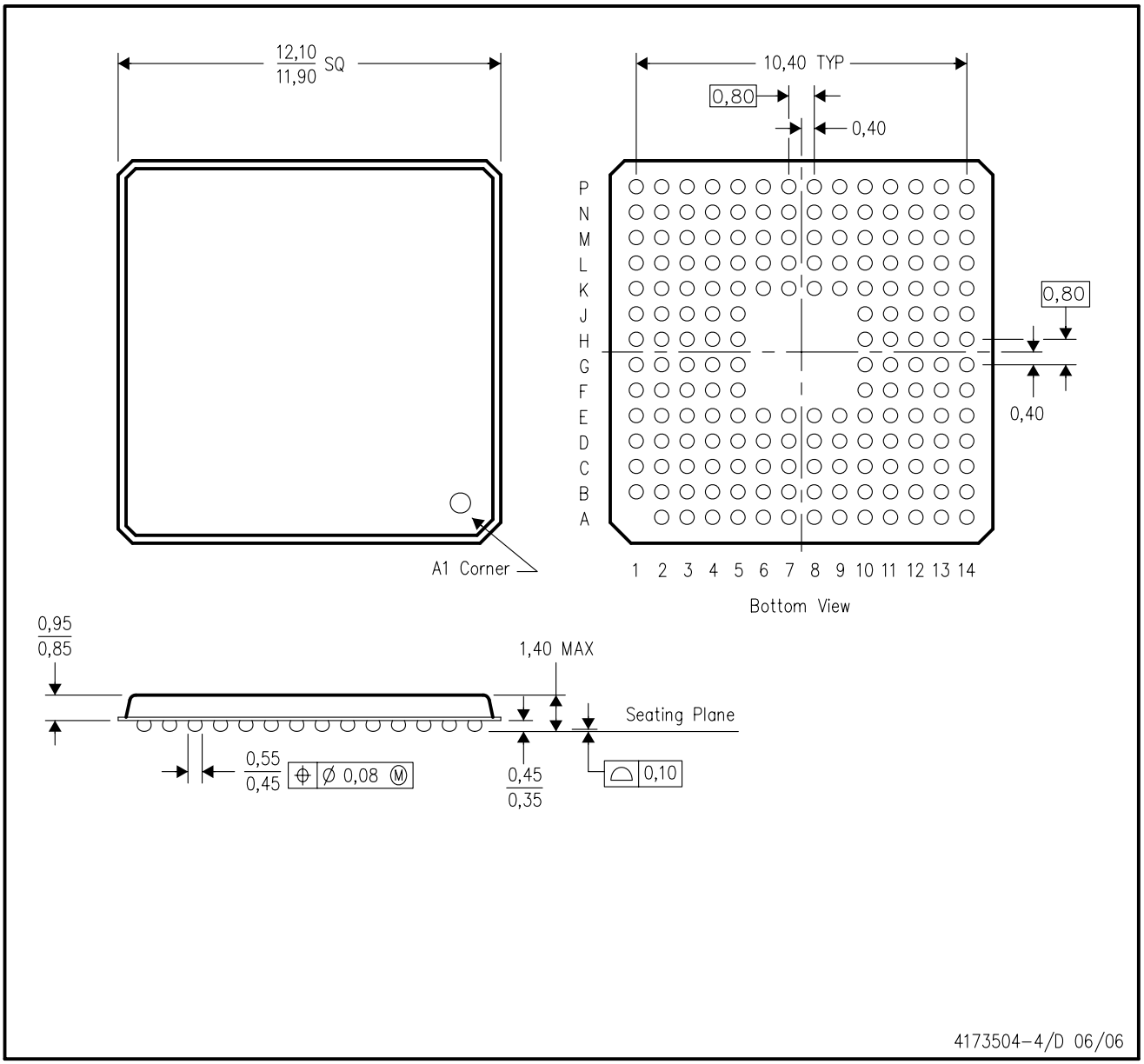

NOTES:
A. All linear dimensions are in millimeters.
B. This drawing is subject to change without notice.
C. Micro Star BGA configuration

PBK (S–PQFP–G128) PLASTIC QUAD FLATPACK

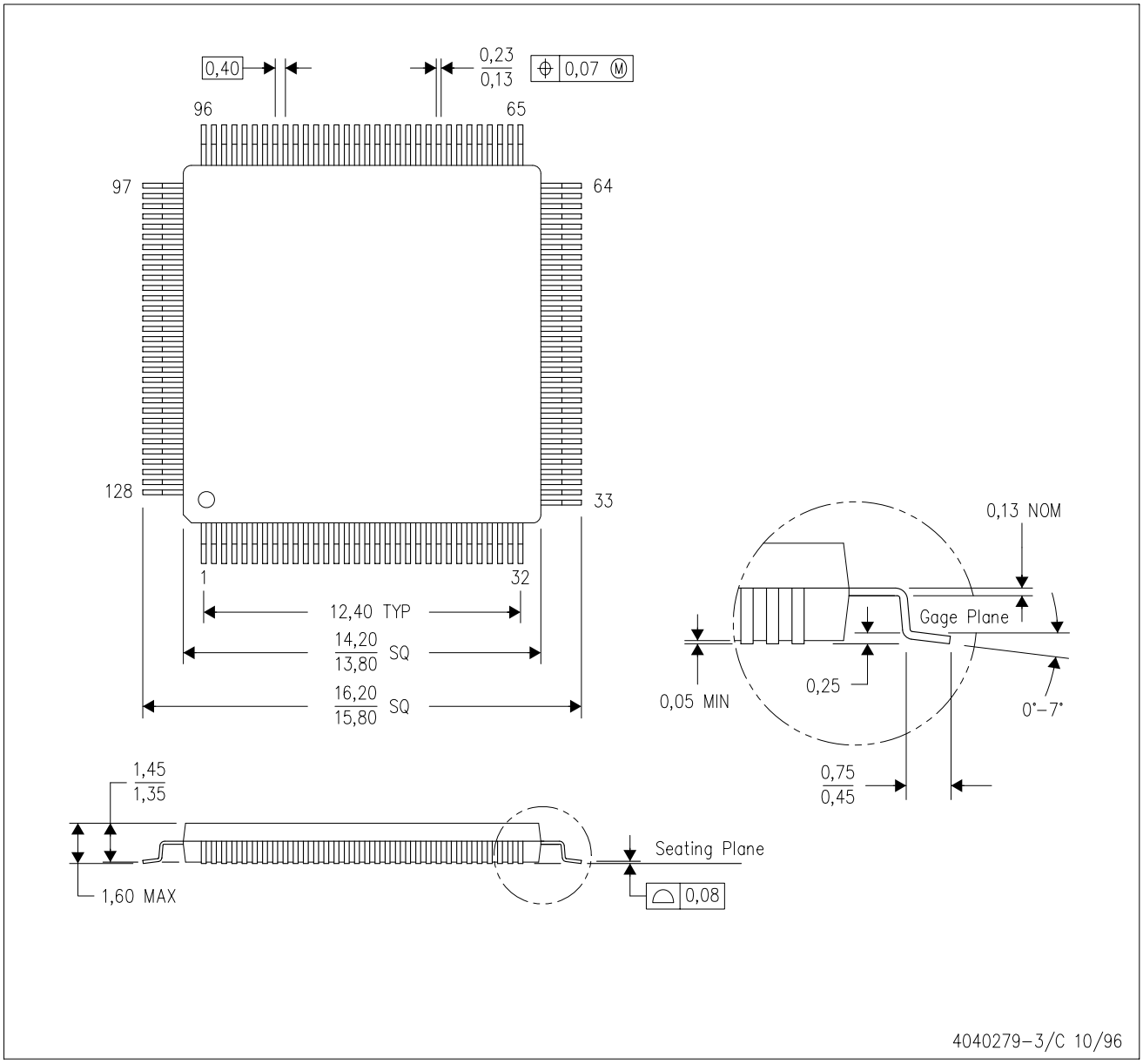

NOTES:
A. All linear dimensions are in millimeters.
B. This drawing is subject to change without notice.
C. Falls within JEDEC MS–026

PBK (S–PQFP–G128) PLASTIC QUAD FLAT PACK

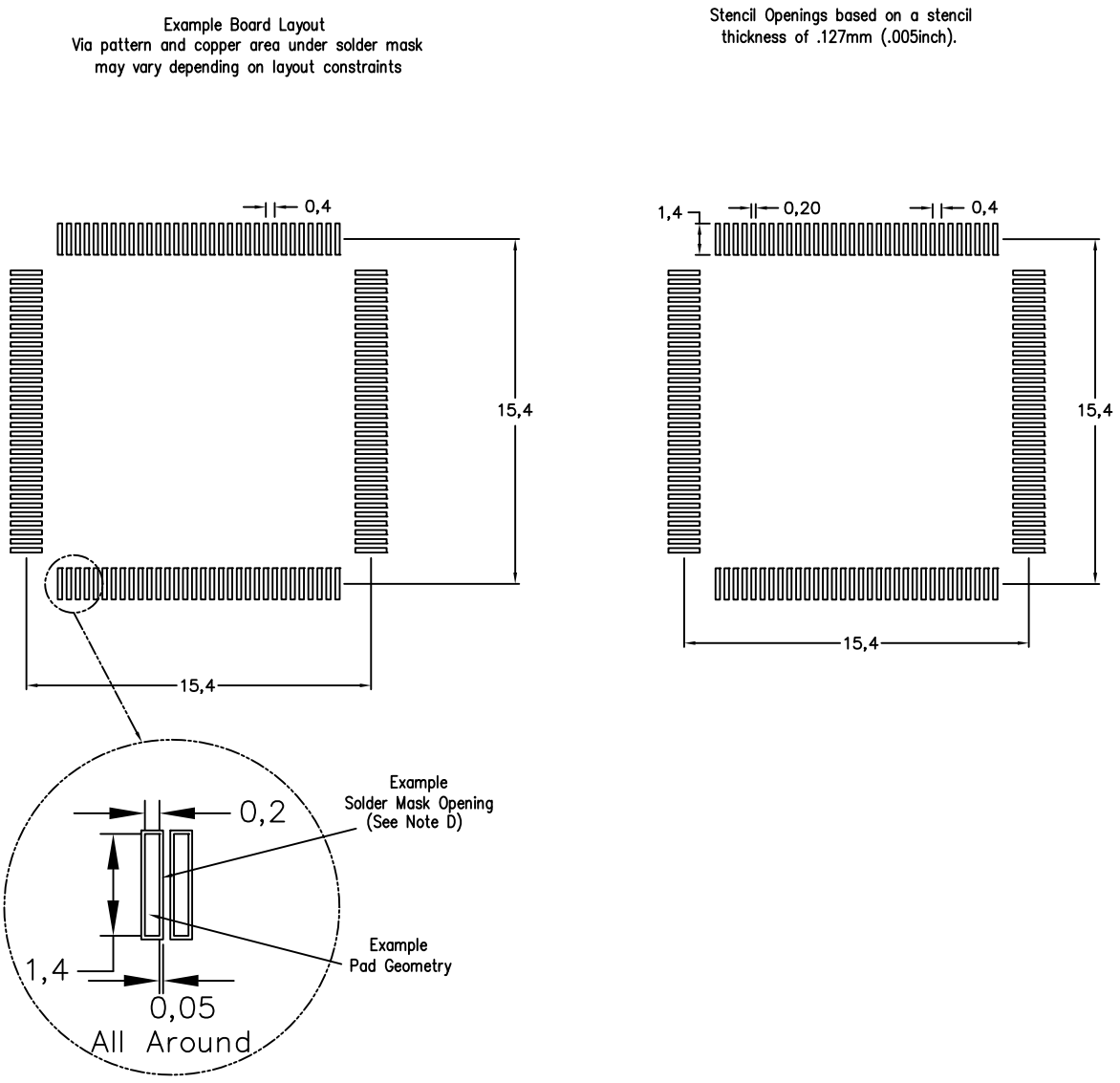

NOTES:
A. All linear dimensions are in millimeters.
B. This drawing is subject to change without notice.
C. Laser cutting apertures with trapezoidal walls and also rounding corners will offer better paste release. Customers should contact their board assembly site for stencil design recommendations. Example stencil metal load solder paste. Refer to IPC–7525 for other stencil recommendations.
D. Customers should contact their board fabrication site for solder mask tolerances between and around signal pads.

IMPORTANT NOTICE AND DISCLAIMER

TI PROVIDES TECHNICAL AND RELIABILITY DATA (INCLUDING DATA SHEETS), DESIGN RESOURCES (INCLUDING REFERENCE DESIGNS), APPLICATION OR OTHER DESIGN ADVICE, WEB TOOLS, SAFETY INFORMATION, AND OTHER RESOURCES “AS IS” AND WITH ALL FAULTS, AND DISCLAIMS ALL WARRANTIES, EXPRESS AND IMPLIED, INCLUDING WITHOUT LIMITATION ANY IMPLIED WARRANTIES OF MERCHANTABILITY, FITNESS FOR A PARTICULAR PURPOSE OR NON-INFRINGEMENT OF THIRD PARTY INTELLECTUAL PROPERTY RIGHTS.

These resources are intended for skilled developers designing with TI products. You are solely responsible for (1) selecting the appropriate TI products for your application, (2) designing, validating and testing your application, and (3) ensuring your application meets applicable standards, and any other safety, security, regulatory or other requirements.

These resources are subject to change without notice. TI grants you permission to use these resources only for development of an application that uses the TI products described in the resource. Other reproduction and display of these resources is prohibited. No license is granted to any other TI intellectual property right or to any third party intellectual property right. TI disclaims responsibility for, and you will fully indemnify TI and its representatives against, any claims, damages, costs, losses, and liabilities arising out of your use of these resources.

TI’s products are provided subject to TI’s Terms of Sale or other applicable terms available either on ti.com or provided in conjunction with such TI products. TI’s provision of these resources does not expand or otherwise alter TI’s applicable warranties or warranty disclaimers for TI products.

TI objects to and rejects any additional or different terms you may have proposed.

Mailing Address: Texas Instruments, Post Office Box 655303, Dallas, Texas 75265
Copyright © 2022, Texas Instruments Incorporated