TPS3850 具备可编程窗口看门狗定时器的高精度电压监控器

1 特性

- 输入电压范围：VDD = 1.6V 至 6.5V
- 0.8% 电压阈值精度
- 低电源电流：I_{DD} = 10µA（典型值）
- 用户可编程看门狗超时
- 用户可编程复位延迟
- 出厂编程的精密看门狗和复位计时器
- 开漏输出
- 精密过压和欠压监测：
  - 支持 0.9V 到 5.0V 常见电压轨
  - 提供 ±4% 和 ±7% 故障窗口
  - 0.5% 迟滞
- 看门狗禁用功能
- 采用小型 3mm × 3mm 10 引脚 VSON 封装
- 结工作温度范围：
  –40°C 至 +125°C

2 应用

- 超声波扫描仪
- 存储区域网络
- 有源天线系统 mMIMO (AAS)
- 机器人伺服驱动器
- 输液泵
- HVAC 控制器

3 说明

TPS3850 将精密监控器与一个可编程窗口看门狗定时器相结合。TPS3850 窗口比较器在 SENSE 引脚上可针对过压 ($V_{IT+(OV)}$) 和欠压 ($V_{IT-(UV)}$) 阈值实现 0.8% 的精度（–40°C 至 +125°C）。此外，TPS3850 针对两阈值施加精确迟滞，使得该器件非常适用于容差要求严格的系统。该监控器的 $\overline{\text{RESET}}$ 延迟可通过经出厂编程的默认延迟设置进行设定，也可以通过外部电容以编程方式设定。出厂编程的 $\overline{\text{RESET}}$ 延迟具备 9.5% 精度、高精密延迟时间。

TPS3850 具备适用于多种应用的可编程窗口看门狗计时器。专用看门狗输出 ($\overline{\text{WDO}}$) 有助于提高分辨率，从而帮助确定出现故障情况的根本原因。窗口看门狗超时可通过经出厂编程的默认延迟设置进行设定，也可以通过外部电容以编程方式设定。可通过逻辑引脚禁用看门狗，避免在开发过程中出现意外的看门狗超时。

TPS3850 采用小型 3.00mm × 3.00mm 10 引脚 VSON 封装。

器件信息

器件型号	封装 (1)	封装尺寸（标称值）
TPS3850	VSON (10)	3.00mm × 3.00mm

(1) 如需了解所有可用封装，请参阅数据表末尾的可订购产品附录。

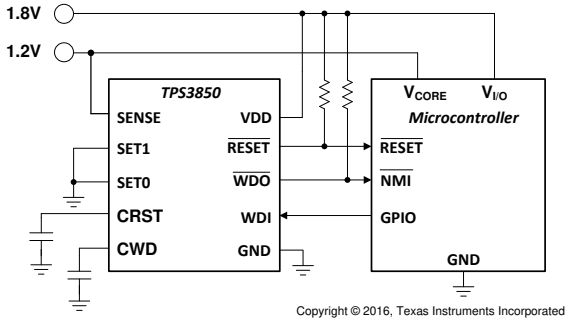

全集成微控制器监控电路

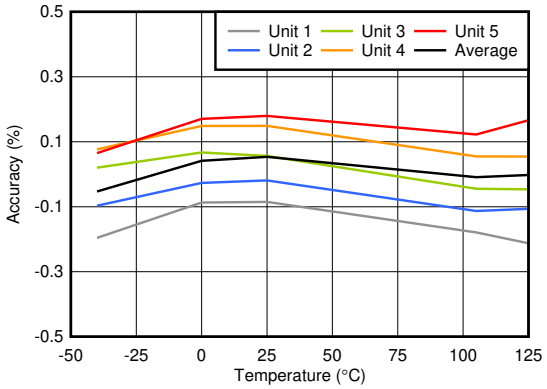

过压阈值 ($V_{IT+(OV)}$) 精度与温度间的关系

本文档旨在为方便起见，提供有关 TI 产品中文版本的信息，以确认产品的概要。有关适用的官方英文版本的最新信息，请访问 www.ti.com，其内容始终优先。TI 不保证翻译的准确性和有效性。在实际设计之前，请务必参考最新版本的英文版本。

Table of Contents

1 特性 ... 1
2 应用 ... 1
3 说明 ... 1
4 Revision History ... 2
5 Pin Configuration and Functions ... 4
6 Specifications ... 5
6.1 Absolute Maximum Ratings ... 5
6.2 ESD Ratings ... 5
6.3 Recommended Operating Conditions ... 5
6.4 Thermal Information ... 6
6.5 Electrical Characteristics ... 6
6.6 Timing Requirements ... 7
6.7 Timing Diagrams ... 8
6.8 Typical Characteristics ... 11
7 Detailed Description ... 14
7.1 Overview ... 14
7.2 Functional Block Diagrams ... 14
7.3 Feature Description ... 15
7.4 Device Functional Modes ... 22
8 Application and Implementation ... 23
8.1 Application Information ... 23
8.2 Typical Applications ... 29
9 Power Supply Recommendations ... 35
10 Layout ... 36
10.1 Layout Guidelines ... 36
10.2 Layout Example ... 36
11 Device and Documentation Support ... 37
11.1 Device Support ... 37
11.2 Documentation Support ... 37
11.3 接收文档更新通知 ... 37
11.4 支持资源 ... 37
11.5 Trademarks ... 37
11.6 Electrostatic Discharge Caution ... 37
11.7 术语表 ... 37
12 Mechanical, Packaging, and Orderable Information ... 38

4 Revision History

注：以前版本的页码可能与当前版本的页码不同

Changes from Revision A (November 2016) to Revision B (September 2021) — **Page**

- 更新了整个文档中的表格、图和交叉参考的编号格式 ... 1
- 删除了“±15% 的 WDT 和 RST 延迟” ... 1
- 更新了“应用”以包括网站链接 ... 1
- 添加了“在 SENSE 引脚上” ... 1
- Changed V_{ESD} values to ±4000 V and ±1000 V ... 5
- Changed I_{CWD} min and max spec ... 6
- Changed V_{CWD} min and max spec ... 6
- Added a footnote to for t_{INIT} ... 7
- Changed minimum and maximum specifications of 2nd, 5th, 6th, and 8th rows of t_{WDL} parameter ... 7
- Changed minimum and maximum specifications of 2nd and last rows of t_{WDU} parameter ... 7
- Added new section "Disabling the Watchdog Timer When Using the CRST Capacitor" ... 18
- Changed 0.000381 to 0.000324 and 0.000438 in Equation 4 and Equation 5, respectively ... 24
- Changed minimum and maximum specifications in 100 pF and 1 nF rows of *Reset Delay Time for Common Ideal Capacitor Values* table ... 24
- Changed minimum and maximum specifications for NC SETx 01 setting for both upper and lower watchdog boundaries, 10 kΩ to VDD SETx 00 and 01 settings for lower watchdog boundary, and 10 kΩ to VDD SETx 11 setting for both upper and lower watchdog boundaries in *Factory-Programmed Watchdog Timing* table ... 25
- Changed minimum and maximum limits on t_{WDU} and added explanation. ... 25
- Changed 0.000381 to 0.000324 in Equation 11 ... 30
- Changed description of factory-programmed timing options and values of $t_{WDL(max)}$ and $t_{WDU(min)}$ in *Setting the Watchdog Window* section ... 30
- Changed 0.85 to 0.905 in Equation 14 ... 33
- Changed Equation 17 and Equation 18 so that I_{SENSE} is no longer in the denominator ... 34

Changes from Revision * (October 2016) to Revision A (November 2016) — **Page**

- Changed units in I_{SENSE} parameter and footnote 1 in *Electrical Characteristics* table ... 6
- Added correct operation state to Figure 2 ... 7

Copyright © 2021 Texas Instruments Incorporated

- Changed Figure 3 so the SET pins do not bring the watchdog into the disabled state before going to the 1:2 ratio.....7
- Changed Figure 11 so it no longer has VDD and V_{SENSE} tied together 11
- Changed Figure 26 so it no longer goes through watchdog disabled.....18
- Added correct operation state to Figure 27 20
- Changed $\overline{\text{RESET}}$ to $\overline{\text{WDO}}$ in description of $\overline{\text{WDO}}$ assertion in *$\overline{\text{WDO}}$ Functionality* section 21

Copyright © 2021 Texas Instruments Incorporated

5 Pin Configuration and Functions

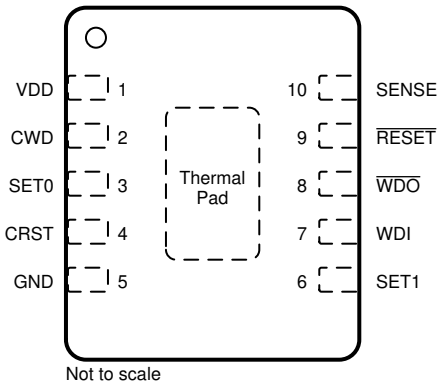

图 5-1. DRC Package: TPS3850 3-mm × 3-mm VSON-10 Top View

表 5-1. Pin Functions

PIN			DESCRIPTION
NAME	NO.	I/O	
CRST	4	I	Programmable reset timeout pin. Connect a capacitor between this pin and GND to program the reset timeout period. This pin can also be connected by a 10-kΩ pullup resistor to VDD, or left unconnected (NC) for various factory programmed reset timeout options; see the *节 8.1.1* section. When using an external capacitor, use 方程式 3 to determine the reset timeout.
CWD	2	I	Programmable watchdog timeout input. Watchdog timeout is set by connecting a capacitor between this pin and ground. Furthermore, this pin can also be connected by a 10-kΩ resistor to VDD, or leaving unconnected (NC) further enables the selection of the preset watchdog timeouts; see the *节 6.6* table. When using a capacitor, the TPS3850 determines the window watchdog upper boundary with 方程式 6. The lower watchdog boundary is set by the SET pins, see 表 8-5 and the *节 8.1.2* section for additional information.
GND	5	—	Ground pin
$\overline{\text{RESET}}$	9	O	Reset output. Connect $\overline{\text{RESET}}$ using a 1-kΩ to 100-kΩ resistor to VDD. $\overline{\text{RESET}}$ goes low when the voltage at the SENSE pin goes below the undervoltage threshold ($V_{IT-(UV)}$) or above the overvoltage threshold ($V_{IT+(OV)}$). When the voltage level at the SENSE pin is within the normal operating range, the $\overline{\text{RESET}}$ timeout counter starts. At timer completion, $\overline{\text{RESET}}$ goes high. During startup, the state of $\overline{\text{RESET}}$ is undefined below the specified power-on reset voltage (V_{POR}). Above V_{POR}, $\overline{\text{RESET}}$ goes low and remains low until the monitored voltage is within the correct operating range (between $V_{IT-(UV)}$ and $V_{IT(+OV)}$) and the $\overline{\text{RESET}}$ timeout is complete.
SENSE	10	I	SENSE input to monitor voltage rail. Connect this pin to the supply rail that must be monitored.
SET0	3	I	Logic input. SET0, SET1, and CWD select the watchdog window ratios, timeouts, and disable the watchdog; see the *节 6.6* table.
SET1	6	I	Logic input. SET0, SET1, and CWD select the watchdog window ratios, timeouts, and disable the watchdog; see the *节 6.6* table.
VDD	1	I	Supply voltage pin. For noisy systems, connecting a 0.1-µF bypass capacitor is recommended.
WDI	7	I	Watchdog input. A falling transition (edge) must occur at this pin between the lower ($t_{WDL(max)}$) and upper ($t_{WDU(min)}$) window boundaries in order for $\overline{\text{WDO}}$ to not assert. When the watchdog is not in use, the SET pins can be used to disable the watchdog. The input at WDI is ignored when $\overline{\text{RESET}}$ or $\overline{\text{WDO}}$ are low (asserted) and also when the watchdog is disabled. If the watchdog is disabled, then WDI cannot be left unconnected and must be driven to either VDD or GND.
$\overline{\text{WDO}}$	8	O	Watchdog output. Connect $\overline{\text{WDO}}$ with a 1-kΩ to 100-kΩ resistor to VDD. $\overline{\text{WDO}}$ goes low (asserts) when a watchdog timeout occurs. $\overline{\text{WDO}}$ only asserts when $\overline{\text{RESET}}$ is high. When a watchdog timeout occurs, $\overline{\text{WDO}}$ goes low (asserts) for the set $\overline{\text{RESET}}$ timeout delay (t_{RST}). When $\overline{\text{RESET}}$ goes low, $\overline{\text{WDO}}$ is in a high-impedance state.
Thermal pad		—	Connect the thermal pad to a large-area ground plane. The thermal pad is internally connected to GND.

Copyright © 2021 Texas Instruments Incorporated

6 Specifications

6.1 Absolute Maximum Ratings

over operating free-air temperature range (unless otherwise noted)(1)

		MIN	MAX	UNIT
Supply voltage range	VDD	–0.3	7	V
Output voltage range	$\overline{\text{RESET}}$, $\overline{\text{WDO}}$	–0.3	7	V
Voltage ranges	SET0, SET1, WDI, SENSE	–0.3	7	V
	CWD, CRST	–0.3	VDD + 0.3(3)	
Output pin current	$\overline{\text{RESET}}$, $\overline{\text{WDO}}$		±20	mA
Input current (all pins)			±20	mA
Continuous total power dissipation		See 节 6.4		
Temperature	Operating junction, T_J (2)	–40	150	°C
	Operating free-air temperature, T_A (2)	–40	150	
	Storage, T_{stg}	–65	150	

(1) Stresses beyond those listed under *Absolute Maximum Ratings* may cause permanent damage to the device. These are stress ratings only, which do not imply functional operation of the device at these or any other conditions beyond those indicated under *Recommended Operating Conditions*. Exposure to absolute-maximum-rated conditions for extended periods may affect device reliability.
(2) $T_J = T_A$ as a result of the low dissipated power in this device.
(3) The absolute maximum rating is V_{DD} + 0.3 V or 7.0 V, whichever is smaller.

6.2 ESD Ratings

			VALUE	UNIT
$V_{(ESD)}$	Electrostatic discharge	Human-body model (HBM), per ANSI/ESDA/JEDEC JS-001(1)	±4000	V
		Charged-device model (CDM), per JEDEC specification JESD22-C101(2)	±1000	

(1) JEDEC document JEP155 states that 500-V HBM allows safe manufacturing with a standard ESD control process. Manufacturing with less than 500-V HBM is possible with the necessary precautions.
(2) JEDEC document JEP157 states that 250-V CDM allows safe manufacturing with a standard ESD control process. Manufacturing with less than 250-V CDM is possible with the necessary precautions.

6.3 Recommended Operating Conditions

over operating free-air temperature range (unless otherwise noted)

		MIN	NOM	MAX	UNIT
VDD	Supply pin voltage	1.6		6.5	V
V_{SENSE}	Input pin voltage	0		6.5	V
V_{SET0}	SET0 pin voltage	0		6.5	V
V_{SET1}	SET1 pin voltage	0		6.5	V
C_{CRST}	$\overline{\text{RESET}}$ delay capacitor	0.1(1)		1000(1)	nF
CRST	Pullup resistor to VDD	9	10	11	kΩ
C_{CWD}	Watchdog timing capacitor	0.1(2)		1000(2)	nF
CWD	Pullup resistor to VDD	9	10	11	kΩ
R_{PU}	Pullup resistor, $\overline{\text{RESET}}$ and $\overline{\text{WDO}}$	1	10	100	kΩ
I_{RST}	$\overline{\text{RESET}}$ pin current			10	mA
I_{WDO}	Watchdog output current			10	mA
T_J	Junction Temperature	–40		125	°C

(1) Using a C_{CRST} capacitor of 0.1 nF or 1000 nF gives a reset delay of 703 µs or 3.22 seconds, respectively.
(2) Using a C_{CWD} capacitor of 0.1 nF or 1000 nF gives a $t_{WDU(typ)}$ of 62.74 ms or 77.45 seconds, respectively.

Copyright © 2021 Texas Instruments Incorporated

6.4 Thermal Information

THERMAL METRIC[1]		TPS3850 DRC (VSON) 10 PINS	UNIT
$R_{\theta JA}$	Junction-to-ambient thermal resistance	52.3	°C/W
$R_{\theta JC(top)}$	Junction-to-case (top) thermal resistance	59.7	°C/W
$R_{\theta JB}$	Junction-to-board thermal resistance	26.1	°C/W
ψ_{JT}	Junction-to-top characterization parameter	1.7	°C/W
ψ_{JB}	Junction-to-board characterization parameter	26.0	°C/W
$R_{\theta JC(bot)}$	Junction-to-case (bottom) thermal resistance	9.7	°C/W

(1) For more information about traditional and new thermal metrics, see the *Semiconductor and IC Package Thermal Metrics* application report.

6.5 Electrical Characteristics

at 1.6 V ≤ V_{DD} ≤ 6.5 V over the operating temperature range of –40°C ≤ T_J ≤ +125°C (unless otherwise noted); the open-drain pullup resistors are 10 kΩ for each output; typical values are at T_J = 25°C

PARAMETER		TEST CONDITIONS	MIN	TYP	MAX	UNIT
GENERAL CHARACTERISTICS						
V_{DD} (1) (2) (3)	Supply voltage		1.6		6.5	V
I_{DD}	Supply current			10	19	µA
RESET FUNCTION						
V_{POR} (2)	Power-on reset voltage	I_{RESET} = 15 µA, $V_{OL(MAX)}$ = 0.25 V			0.8	V
V_{UVLO} (1)	Undervoltage lockout voltage			1.35		V
$V_{IT+(OV)}$	Overvoltage SENSE threshold accuracy, entering $\overline{RESET}$		$V_{IT+(nom)}$ – 0.8%		$V_{IT+(nom)}$+0.8%	
$V_{IT-(UV)}$	Undervoltage SENSE threshold accuracy, entering $\overline{RESET}$		$V_{IT-(nom)}$ – 0.8%		$V_{IT-(nom)}$+0.8%	
$V_{IT(ADJ)}$	Falling SENSE threshold voltage, adjustable version only		0.3968	0.4	0.4032	V
V_{HYST}	Hysteresis voltage		0.2%	0.5%	0.8%	
I_{CRST}	CRST pin charge current	CRST = 0.5 V	347	375	403	nA
V_{CRST}	CRST pin threshold voltage		1.196	1.21	1.224	V
WINDOW WATCHDOG FUNCTION						
I_{CWD}	CWD pin charge current	CWD = 0.5 V	347	375	403	nA
V_{CWD}	CWD pin threshold voltage		1.196	1.21	1.224	V
V_{OL}	$\overline{RESET}$, $\overline{WDO}$ output low	VDD = 5 V, I_{SINK} = 3 mA			0.4	V
I_D	$\overline{RESET}$, $\overline{WDO}$ output leakage current	VDD = 1.6 V, $V_{\overline{RESET}}$ = $V_{\overline{WDO}}$ = 6.5 V			1	µA
V_{IL}	Low-level input voltage (SET0, SET1)				0.25	V
V_{IH}	High-level input voltage (SET0, SET1)		0.8			V
$V_{IL(WDI)}$	Low-level input voltage (WDI)				0.3 × V_{DD}	V
$V_{IH(WDI)}$	High-level input voltage (WDI)		0.8 × V_{DD}			V
I_{SENSE}	SENSE pin idle current	TPS3850Xyy(y), V_{SENSE} = 5.0 V, VDD = 3.3 V		2.1	2.5	µA
		TPS3850H01 only, V_{SENSE} = 5.0 V, VDD = 3.3 V	–50		50	nA

(1) When V_{DD} falls below V_{UVLO}, $\overline{RESET}$ is driven low.
(2) When V_{DD} falls below V_{POR}, $\overline{RESET}$ and $\overline{WDO}$ are undefined.
(3) During power-on, V_{DD} must be a minimum 1.6 V for at least 300 µs before the output corresponds to the SENSE voltage.

Copyright © 2021 Texas Instruments Incorporated

6.6 Timing Requirements

			MIN	TYP	MAX	UNIT
GENERAL						
t_{INIT}	CWD, CRST pin evaluation period(1)			381		µs
t_{SET}	Time required between changing SET0 and SET1 pins			500		µs
	SET0, SET1 pin setup time			1		µs
	Startup delay(2)			300		µs
RESET FUNCTION						
t_{RST}	Reset timeout period	CRST = NC	170	200	230	ms
		CRST = 10 kΩ to VDD	8.5	10	11.5	ms
$t_{RST-DEL}$	V_{SENSE} to $\overline{RESET}$ delay	VDD = 5 V, V_{SENSE} = $V_{IT+(OV)}$ + 2.5%		35		µs
		VDD = 5 V, V_{SENSE} = $V_{IT-(UV)}$ – 2.5%		17		
WINDOW WATCHDOG FUNCTION						
WD ratio	Window watchdog ratio of lower boundary to upper boundary	CWD = programmable, SET0 = 0, SET1 = 0(3)		1/8		
		CWD = programmable, SET0 = 1, SET1 = 1(3)		1/2		
		CWD = programmable, SET0 = 0, SET1 = 1(3) (4)		3/4		
t_{WDL}	Window watchdog lower boundary	CWD = NC, SET0 = 0, SET1 = 0	19.1	22.5	25.9	ms
		CWD = NC, SET0 = 0, SET1 = 1	1.48	1.85	2.22	ms
		CWD = NC, SET0 = 1, SET1 = 0	Watchdog disabled			
		CWD = NC, SET0 = 1, SET1 = 1	680	800	920	ms
		CWD = 10 kΩ to VDD, SET0 = 0, SET1 = 0	7.65	9.0	10.35	ms
		CWD = 10 kΩ to VDD, SET0 = 0, SET1 = 1	7.65	9.0	10.35	ms
		CWD = 10 kΩ to VDD, SET0 = 1, SET1 = 0	Watchdog disabled			
		CWD = 10 kΩ to VDD, SET0 = 1, SET1 = 1	1.48	1.85	2.22	ms
t_{WDU}	Window watchdog upper boundary	CWD = NC, SET0 = 0, SET1 = 0	46.8	55.0	63.3	ms
		CWD = NC, SET0 = 0, SET1 = 1	23.375	27.5	31.625	ms
		CWD = NC, SET0 = 1, SET1 = 0	Watchdog disabled			
		CWD = NC, SET0 = 1, SET1 = 1	1360	1600	1840	ms
		CWD = 10 kΩ to VDD, SET0 = 0, SET1 = 0	92.7	109.0	125.4	ms
		CWD = 10 kΩ to VDD, SET0 = 0, SET1 = 1	165.8	195.0	224.3	ms
		CWD = 10 kΩ to VDD, SET0 = 1, SET1 = 0	Watchdog disabled			
		CWD = 10 kΩ to VDD, SET0 = 1, SET1 = 1	9.35	11.0	12.65	ms
$t_{WD-setup}$	Setup time required for device to respond to changes on WDI after being enabled			150		µs
	Minimum WDI pulse duration			50		ns
t_{WD-del}	WDI to $\overline{WDO}$ delay			50		ns

(1) Please refer to 节 8.1.1.2
(2) During power-on, V_{DD} must be a minimum 1.6 V for at least 300 µs before the output corresponds to the SENSE voltage.
(3) 0 refers to $V_{SET} \leqslant V_{IL}$, 1 refers to $V_{SET} \geqslant V_{IH}$.
(4) If this watchdog ratio is used, then $t_{WDL(max)}$ can overlap $t_{WDU(min)}$.

Copyright © 2021 Texas Instruments Incorporated

6.7 Timing Diagrams

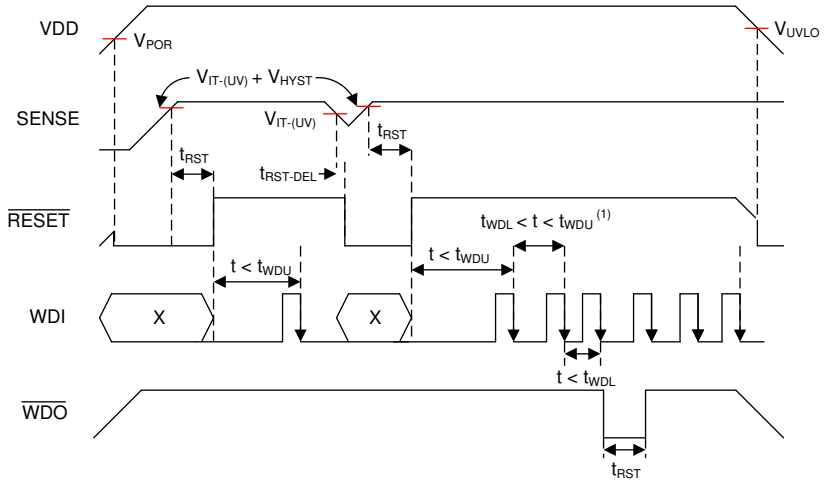

图 6-1. Timing Diagram

A. See 图 6-2 for WDI timing requirements.

Copyright © 2021 Texas Instruments Incorporated

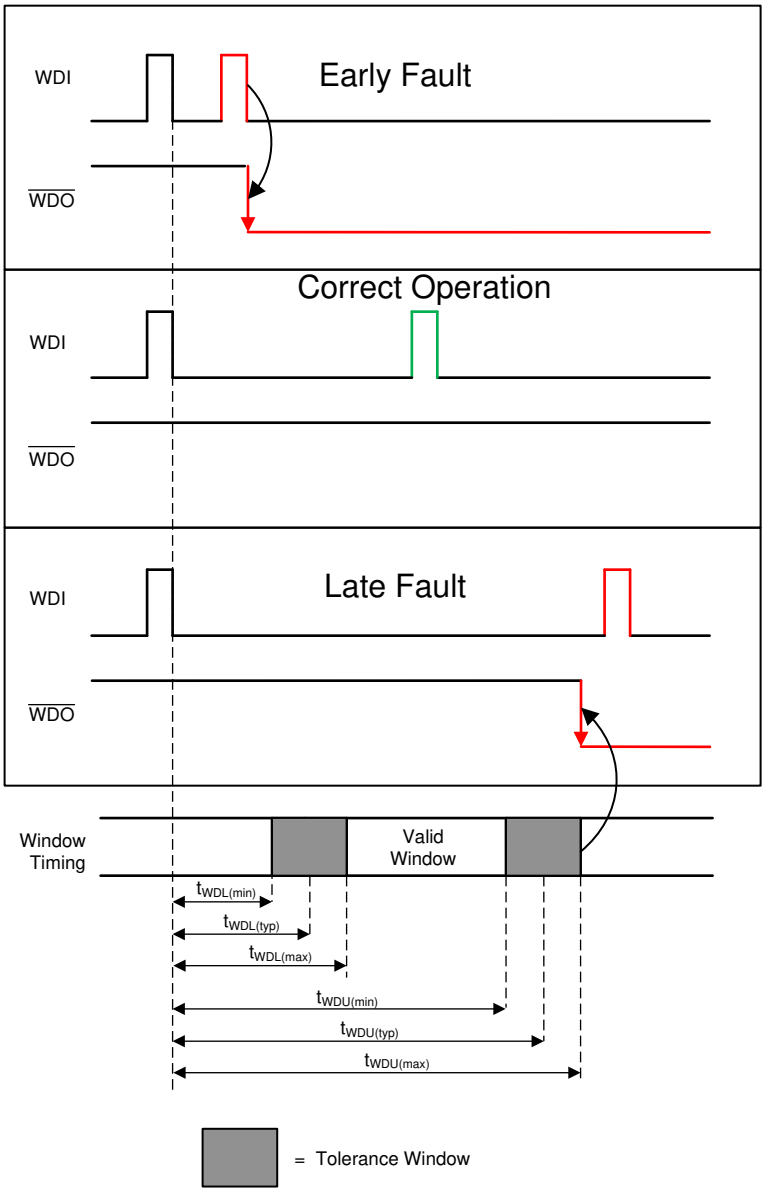

图 6-2. TPS3850 Window Watchdog Timing

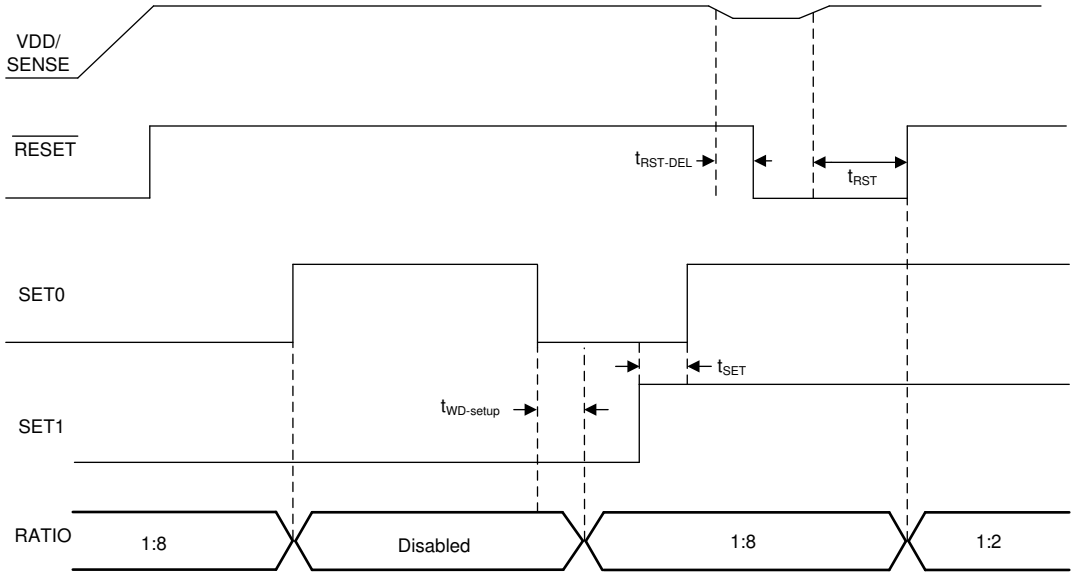

图 6-3. Changing SET0 and SET1 Pins

Copyright © 2021 Texas Instruments Incorporated

6.8 Typical Characteristics

all curves are taken at T_A = 25°C with 1.6 V ⩽ V_{DD} ⩽ 6.5 V (unless otherwise noted)

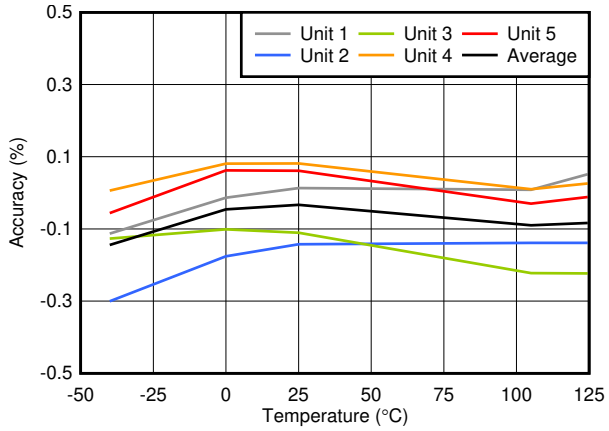

图 6-4. $V_{IT+(OV)}$ Accuracy vs Temperature

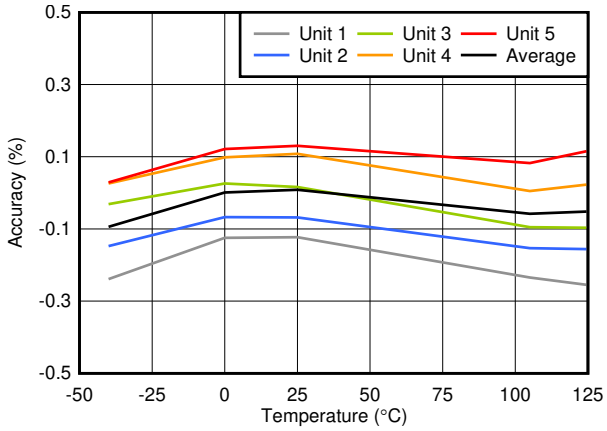

图 6-5. $V_{IT-(UV)}$ Accuracy vs Temperature

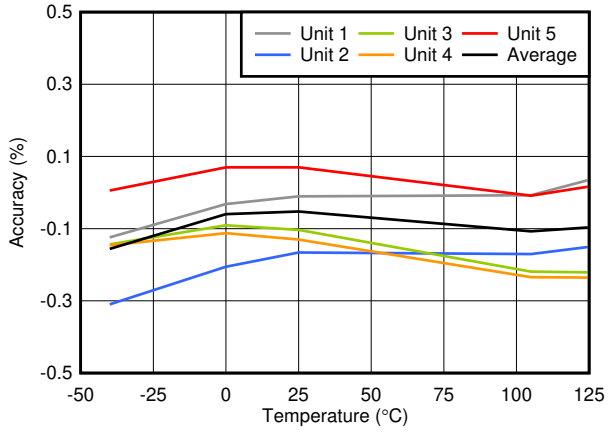

图 6-6. $V_{IT-(OV)}$ Accuracy vs Temperature

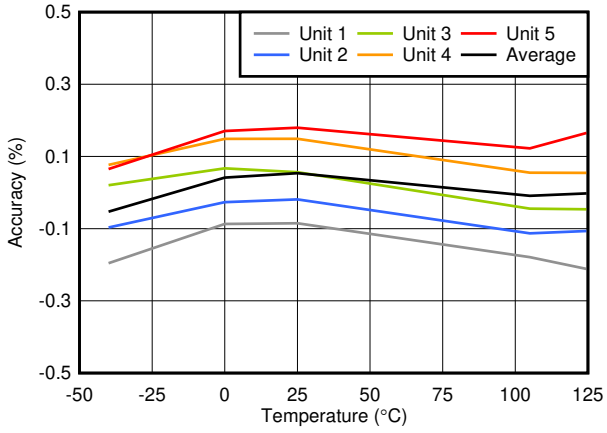

图 6-7. $V_{IT+(UV)}$ Accuracy vs Temperature

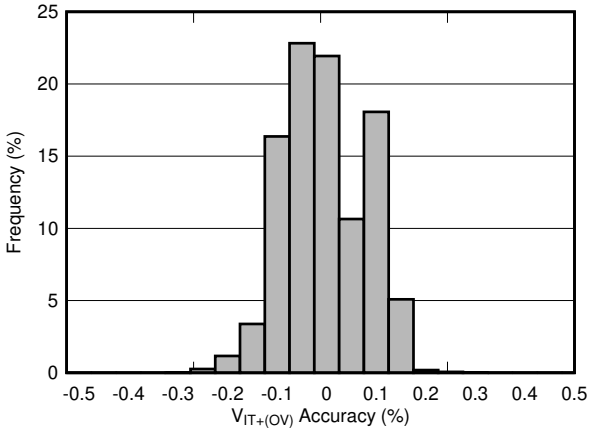

Includes G and H versions; with 1.2-V, 1.8-V, 3.0-V, 3.3-V, and 5-V thresholds; total units = 41,111

图 6-8. $V_{IT+(OV)}$ Accuracy Histogram

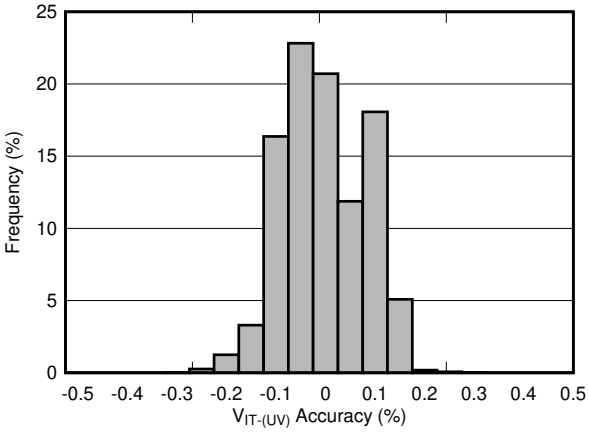

Includes G and H versions; with 1.2-V, 1.8-V, 3.0-V, 3.3-V, and 5-V thresholds; total units = 41,111

图 6-9. $V_{IT-(UV)}$ Accuracy Histogram

Copyright © 2021 Texas Instruments Incorporated

6.8 Typical Characteristics (continued)

all curves are taken at T_A = 25°C with 1.6 V ⩽ V_{DD} ⩽ 6.5 V (unless otherwise noted)

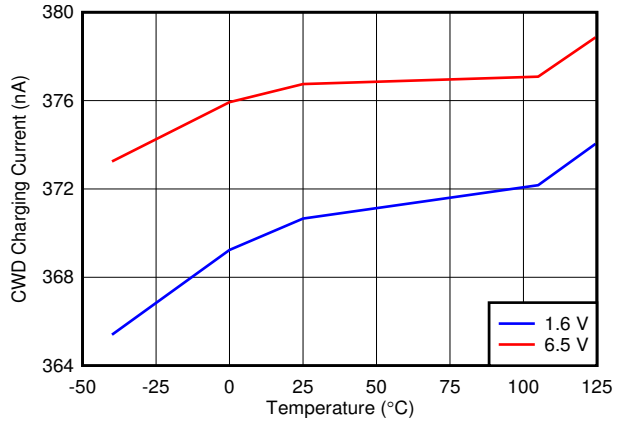

图 6-10. CWD Charging Current vs Temperature

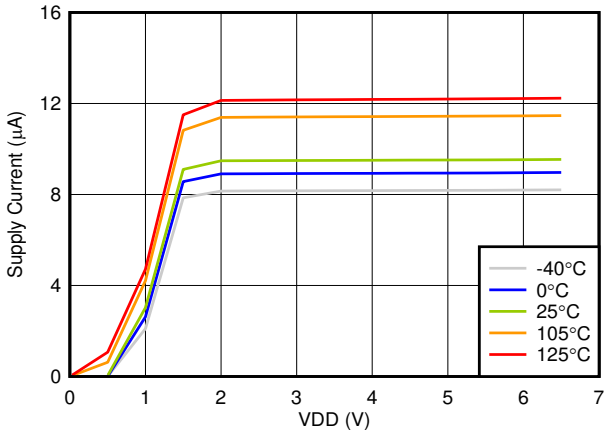

图 6-11. Supply Current vs Power-Supply Voltage

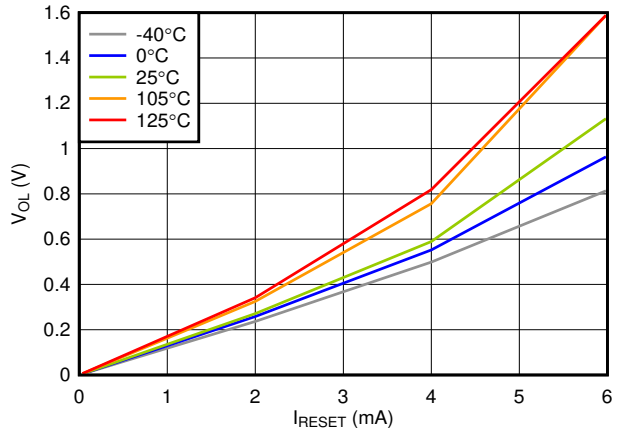

VDD = 1.6 V

图 6-12. Low-Level $\overline{\text{RESET}}$ Voltage vs $\overline{\text{RESET}}$ Current

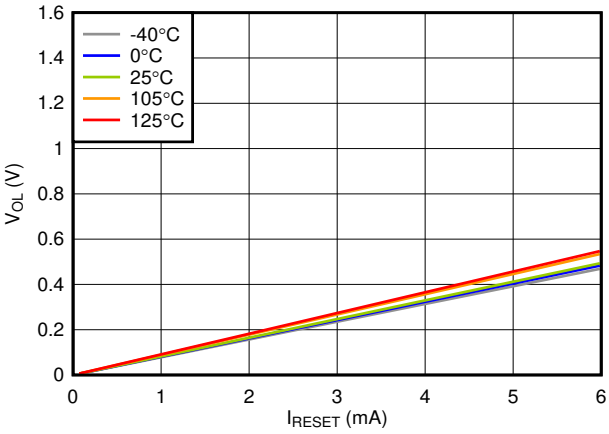

VDD = 6.5 V

图 6-13. Low-Level $\overline{\text{RESET}}$ Voltage vs $\overline{\text{RESET}}$ Current

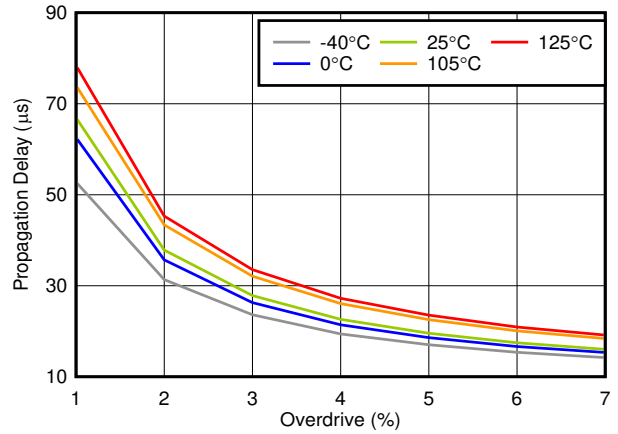

VDD = 1.6 V, $V_{IT+(OV)}$ = 0.936 V

图 6-14. Propagation Delay vs Overdrive

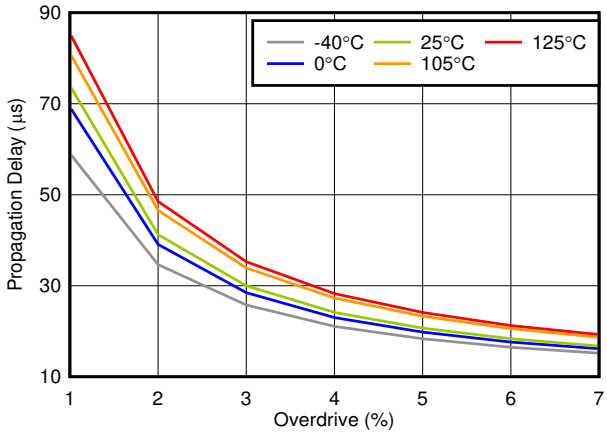

VDD = 6.5 V, $V_{IT+(OV)}$ = 0.936 V

图 6-15. Propagation Delay vs Overdrive

Copyright © 2021 Texas Instruments Incorporated

6.8 Typical Characteristics (continued)

all curves are taken at T_A = 25°C with 1.6 V ≤ V_{DD} ≤ 6.5 V (unless otherwise noted)

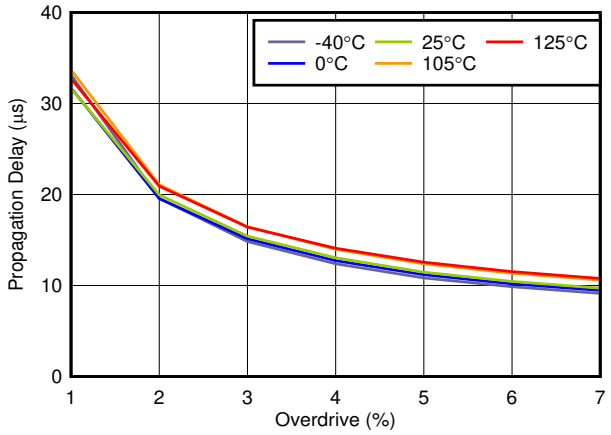

VDD = 1.6 V, $V_{IT-(UV)}$ = 0.864 V

图 6-16. Propagation Delay vs Overdrive

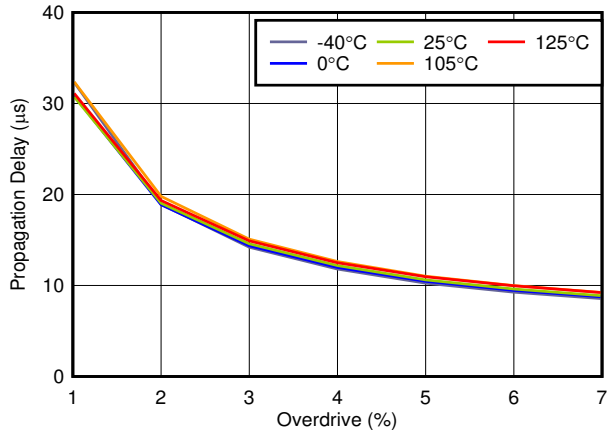

VDD = 6.5 V, $V_{IT-(UV)}$ = 0.864 V

图 6-17. Propagation Delay vs Overdrive

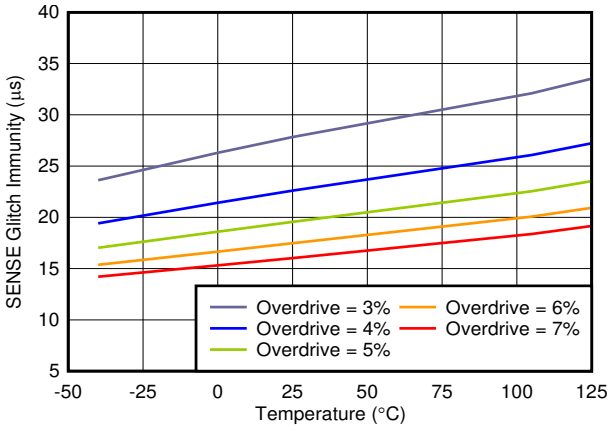

VDD = 1.6 V, $V_{IT+(OV)}$ = 0.936 V

图 6-18. SENSE Glitch Immunity vs Temperature

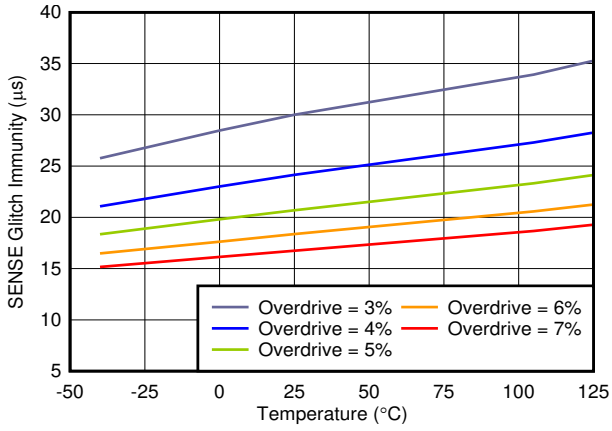

VDD = 6.5 V, $V_{IT+(OV)}$ = 0.936 V

图 6-19. SENSE Glitch Immunity vs Temperature

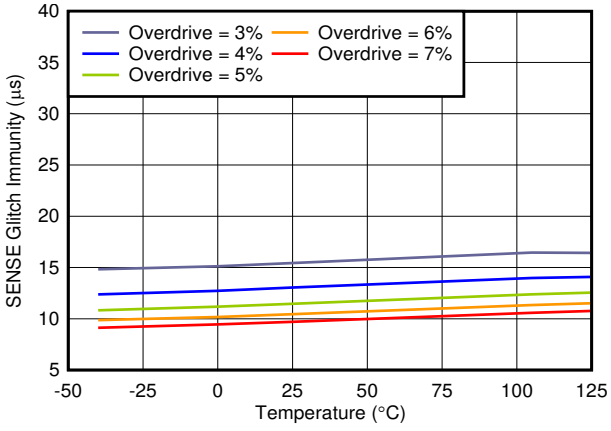

VDD = 1.6 V, $V_{IT-(UV)}$ = 0.864 V

图 6-20. SENSE Glitch Immunity vs Temperature

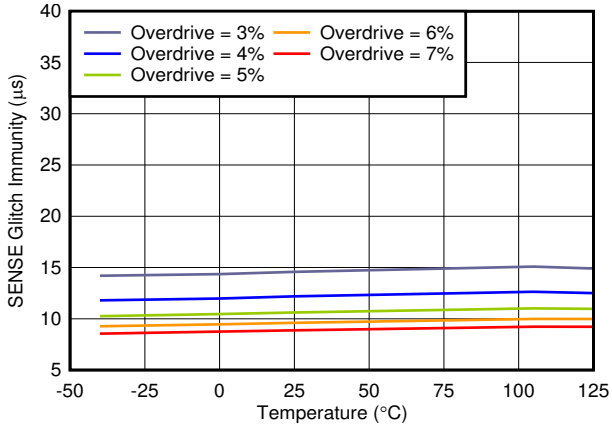

VDD = 6.5 V, $V_{IT-(UV)}$ = 0.864 V

图 6-21. SENSE Glitch Immunity vs Temperature

Copyright © 2021 Texas Instruments Incorporated

7 Detailed Description

7.1 Overview

The TPS3850 is a high-accuracy voltage supervisor with an integrated watchdog timer. This device includes a precision voltage supervisor with both overvoltage ($V_{IT+(OV)}$) and undervoltage ($V_{IT-(UV)}$) thresholds that achieve 0.8% accuracy over the specified temperature range of –40°C to +125°C. In addition, the TPS3850 includes accurate hysteresis on both thresholds, making the device ideal for use with tight tolerance systems where voltage supervisors must ensure a $\overline{\text{RESET}}$ before the minimum and maximum supply tolerance of the microprocessor or system-on-a-chip (SoC) is reached.

7.2 Functional Block Diagrams

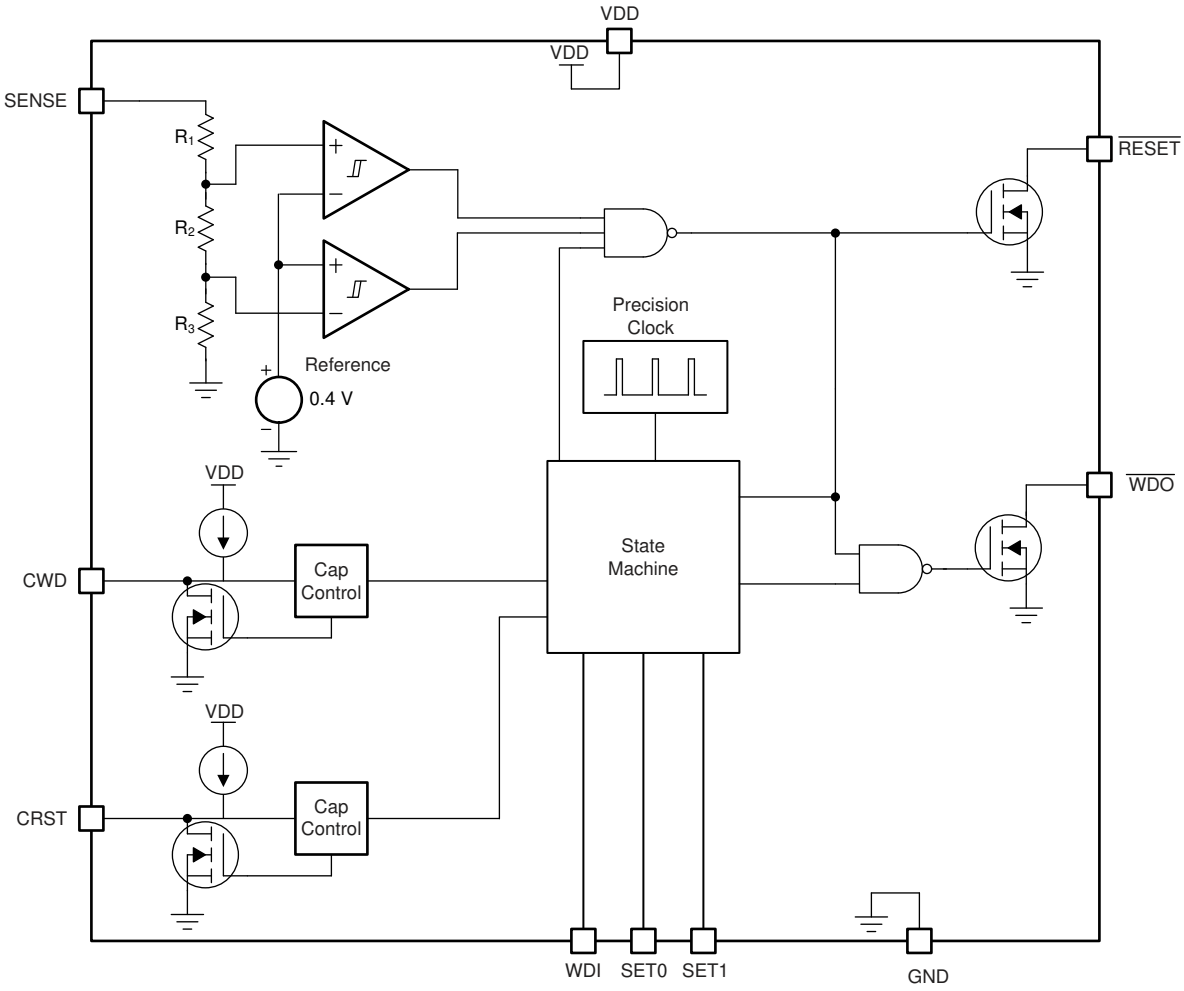

图 7-1. Fixed Version Block Diagram

$R_{TOTAL} = R_1 + R_2 + R_3 = 4.5\ M\Omega$.

Copyright © 2021 Texas Instruments Incorporated

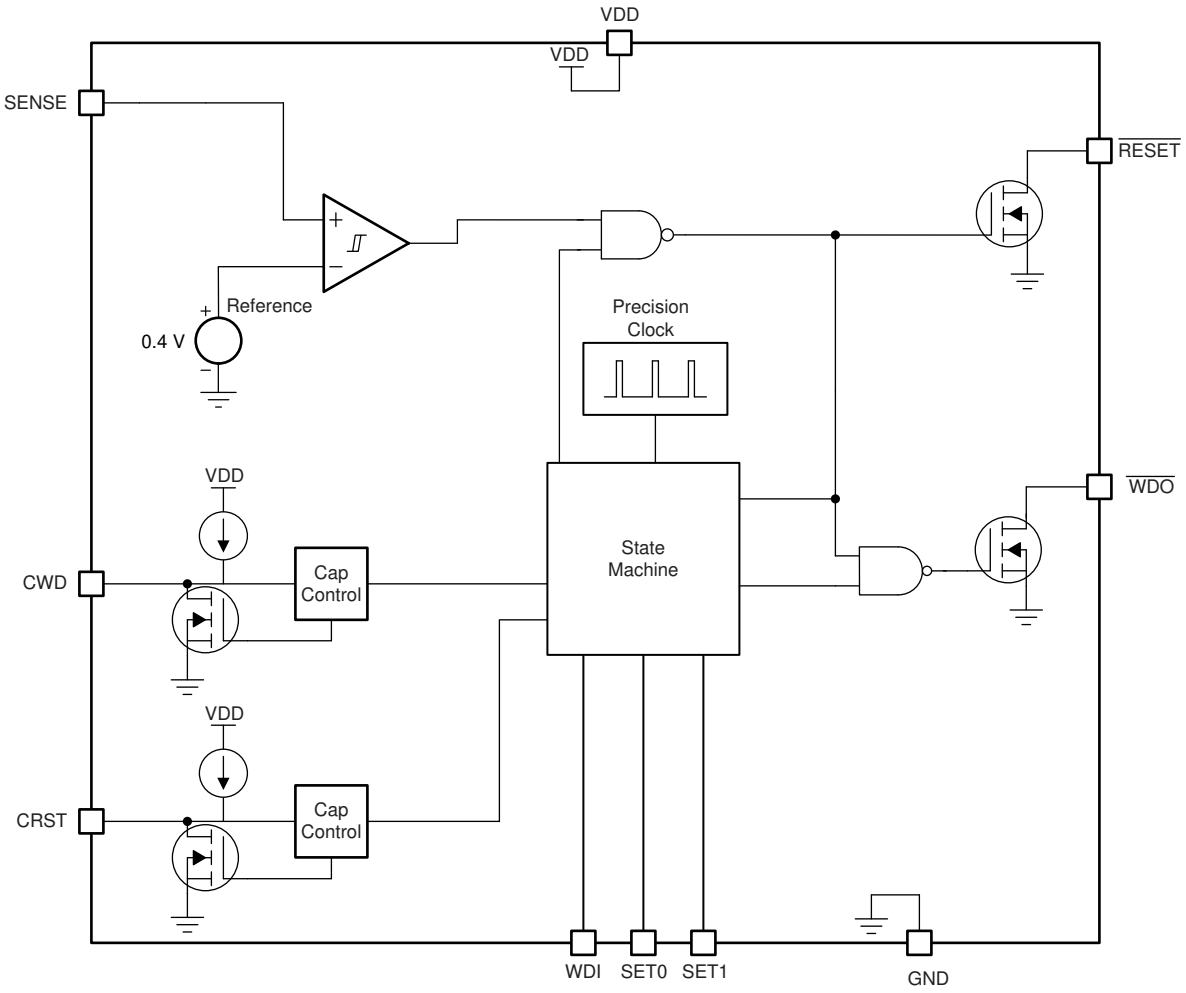

图 7-2. Adjustable Version Block Diagram

7.3 Feature Description

7.3.1 CRST

The CRST pin provides the user the functionality of both high-precision, factory-programmed, reset delay timing options and user-programmable, reset delay timing. The CRST pin can be pulled up to VDD through a resistor, have an external capacitor to ground, or can be left unconnected. The configuration of the CRST pin is re-evaluated by the device every time the voltage on the SENSE line enters the valid window ($V_{IT+(UV)}$ < V_{SENSE} < $V_{IT-(OV)}$). The pin evaluation is controlled by an internal state machine that determines which option is connected to the CRST pin. The sequence of events takes 381 µs (t_{INIT}) to determine if the CRST pin is left unconnected, pulled up through a resistor, or connected to a capacitor. If the CRST pin is being pulled up to VDD, then a 10-kΩ pullup resistor is required.

7.3.2 $\overline{\text{RESET}}$

The $\overline{\text{RESET}}$ pin features a programmable reset delay time that can be adjusted from 703 µs to 3.22 seconds when using adjustable capacitor timing. $\overline{\text{RESET}}$ is an open-drain output that should be pulled up through a 1-kΩ to 100-kΩ pullup resistor. When V_{DD} is above $V_{DD\ (min)}$, $\overline{\text{RESET}}$ remains high (not asserted) when the SENSE voltage is between the positive threshold ($V_{IT+(OV)}$) and the negative threshold ($V_{IT-(UV)}$). If SENSE falls below $V_{IT-(UV)}$ or rises above $V_{IT+(OV)}$, then $\overline{\text{RESET}}$ is asserted, driving the $\overline{\text{RESET}}$ pin to a low-impedance state. When SENSE comes back into the valid window, a $\overline{\text{RESET}}$ delay circuit is enabled that holds $\overline{\text{RESET}}$ low for a specified reset delay period (t_{RST}). This t_{RST} period is determined by what is connected to the CRST pin; see 图 8-1. When the reset delay has elapsed, the $\overline{\text{RESET}}$ pin goes to a high-impedance state and uses a pullup

Copyright © 2021 Texas Instruments Incorporated

resistor to hold $\overline{\text{RESET}}$ high. The pullup resistor must be connected to the proper voltage rail to allow other devices to be connected at the correct interface voltage. To ensure proper voltage levels, give some consideration when choosing the pullup resistor values. The pullup resistor value is determined by output logic low voltage (V_{OL}), capacitive loading, and leakage current (I_D); see the *节 8.1.1* section for more information.

7.3.3 Over- and Undervoltage Fault Detection

The TPS3850 features both overvoltage detection and undervoltage detection. This detection is achieved through the combination of two comparators with a precision voltage reference and a trimmed resistor divider (fixed versions only). The SENSE pin is used to monitor the critical voltage rail; this configuration optimizes device accuracy because all resistor tolerances are accounted for in the accuracy and performance specifications. Both comparators also include built-in hysteresis that provides some noise immunity and ensures stable operation. If the voltage on the SENSE pin drops below $V_{IT-(UV)}$, then $\overline{\text{RESET}}$ is asserted (driven low). When the voltage on the SENSE pin is between the positive and negative threshold voltages, $\overline{\text{RESET}}$ deasserts after the user-defined $\overline{\text{RESET}}$ delay time, as shown in 图 7-3.

The SENSE input can vary from GND to 6.5 V, regardless of the device supply voltage used. Although not required in most cases, for noisy applications, good analog-design practice is to place a 1-nF to 10-nF bypass capacitor at the SENSE pin to reduce sensitivity to transient voltages on the monitored signal.

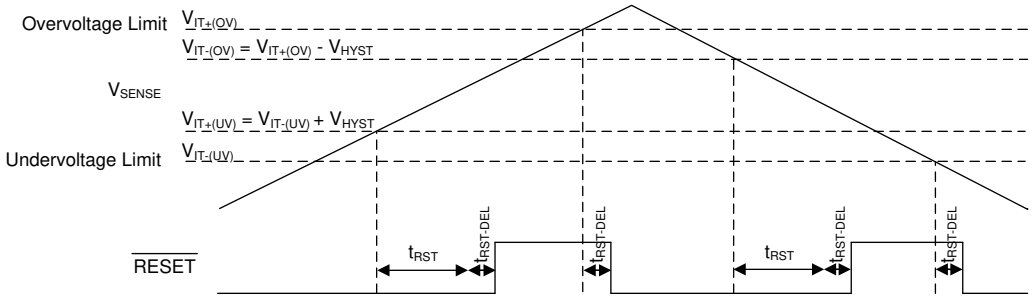

图 7-3. Window Comparator Timing Diagram

7.3.4 Adjustable Operation Using the TPS3850H01

The adjustable version (TPS3850H01) can be used to monitor any voltage rail down to 0.4 V using the circuit illustrated in 图 7-4. When using the TPS3850H01, the device does not function as a window comparator; instead, the device only monitors the undervoltage threshold. To monitor a user-defined voltage, the target threshold voltage for the monitored supply (V_{MON}) and the resistor divider values can be calculated by using 方程式 1 and 方程式 2, respectively:

$$V_{MON} = V_{IT(ADJ)} \times \left(1 + \frac{R_1}{R_2}\right) \quad (1)$$

方程式 1 can be used to calculate either the negative threshold or the positive threshold by replacing V_{ITx} with either V_{ITN} or $V_{ITN} + V_{HYST}$, respectively.

$$R_{TOTAL} = R_1 + R_2 \quad (2)$$

Large resistor values minimize current consumption; however, the input bias current of the device degrades accuracy if the current through the resistors is too low. Therefore, choosing an R_{TOTAL} value so that the current through the resistor divider is at least 100 times larger than the maximum SENSE pin current (I_{SENSE}) ensures a good degree of accuracy; see the *I_Q vs Accuracy Tradeoff In Designing Resistor Divider Input To A Voltage Supervisor* (SLVA450) application report for more details on sizing input resistors.

Copyright © 2021 Texas Instruments Incorporated

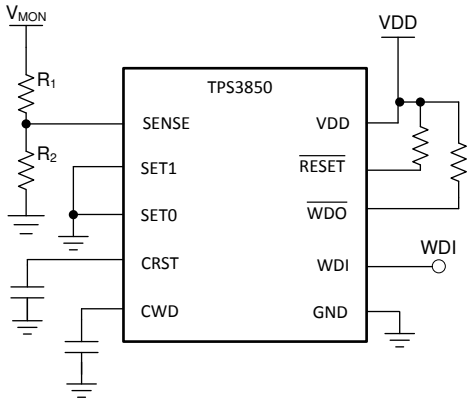

图 7-4. Adjustable Voltage Monitor

7.3.5 Window Watchdog

7.3.5.1 SET0 and SET1

When changing the SET0 or SET1 pins, there are two cases to consider: enabling and disabling the watchdog, and changing the SET0 or SET1 pins when the watchdog is enabled. In case 1 where the watchdog is being enabled or disabled, the changes take effect immediately. However, in case 2, a $\overline{\text{RESET}}$ event must occur in order for the changes to take place.

7.3.5.1.1 Enabling the Window Watchdog

The TPS3850 features the ability to enable and disable the watchdog timer. This feature allows the user to start with the watchdog timer disabled and then enable the watchdog timer using the SET0 and SET1 pins. The ability to enable and disable the watchdog is useful to avoid undesired watchdog trips during initialization and shutdown. When the SETx pins are changed to disable the watchdog timer, changes on the pins are responded to immediately (as shown in 图 7-5). When the watchdog goes from disabled to enabled, there is a 150 μs ($t_{WD\text{-}setup}$) transition period where the device does not respond to changes on WDI. After this 150-μs period, the device begins to respond to changes on WDI again.

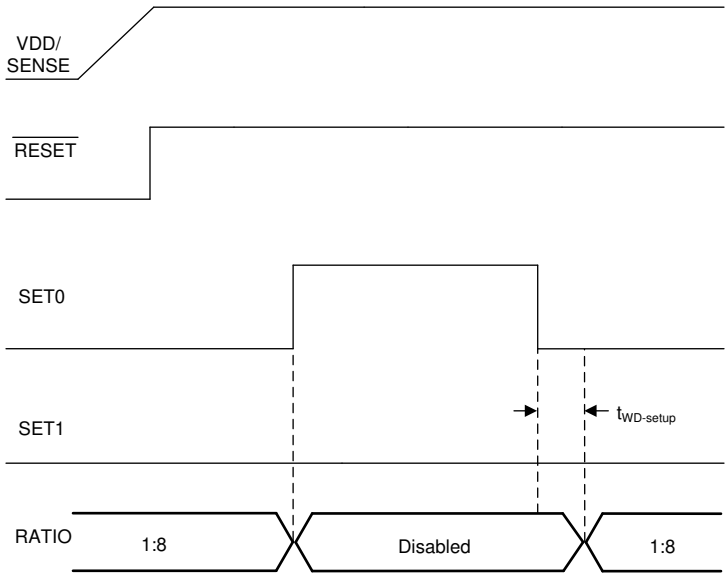

图 7-5. Enabling the Watchdog Timer

7.3.5.1.2 Disabling the Watchdog Timer When Using the CRST Capacitor

When using the TPS3850-Q1 with fixed timing options, if the watchdog is disabled and reenabled while $\overline{WDO}$ is asserted (logic low) the watchdog performs as described in the *节 7.3.5.1.1* section. However, if there is a capacitor on the CRST pin, and the watchdog is disabled and reenabled when $\overline{WDO}$ is asserted (logic low), then the watchdog behaves as shown in 图 7-6. When the watchdog is disabled, $\overline{WDO}$ goes high impedance (logic high). However, when the watchdog is enabled again, the t_{RST} period must expire before the watchdog resumes normal operation.

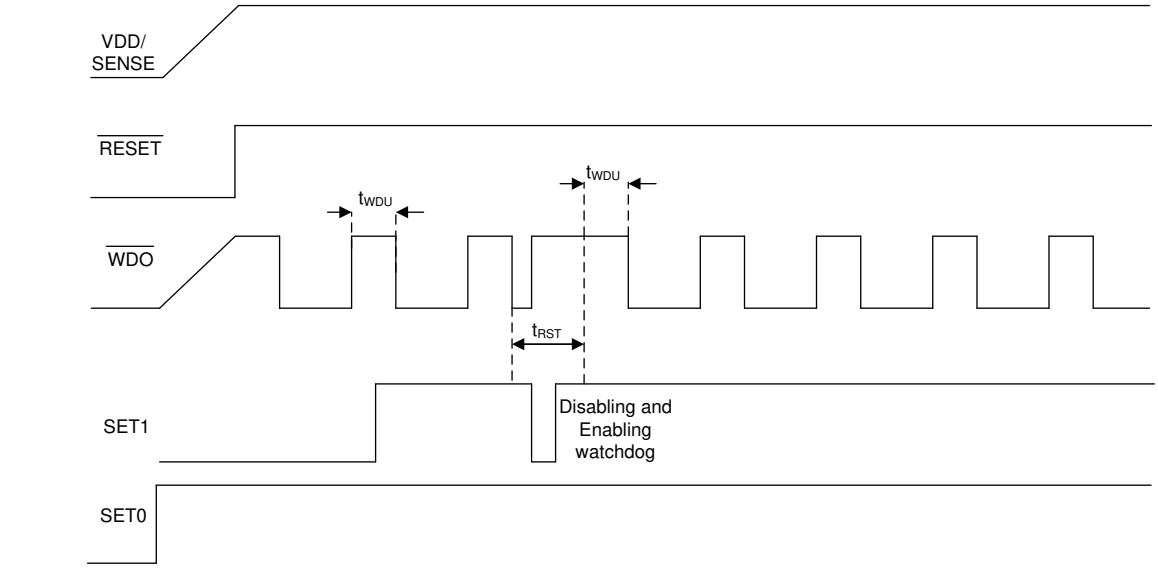

There is no WDI signal in this figure, WDI is always at GND.

图 7-6. Enabling and Disabling the Watchdog Timer During a WDO Reset Event

7.3.5.1.3 SET0 and SET1 During Normal Watchdog Operation

The SET0 and SET1 pins can be used to control the window watchdog ratio of the lower boundary to the upper boundary. There are four possible modes for the watchdog (see 表 8-5): disabled, 1:8 ratio, 3:4 ratio, and 1:2 ratio. If SET0 = 1 and SET1 = 0, then the watchdog is disabled. When the watchdog is disabled $\overline{WDO}$ does not assert, and the TPS3850 functions as a normal supervisor. The SET0 and SET1 pins can be changed when the device is operational, but cannot be changed at the same time. If these pins are changed when the device is operational, then there must be a 500-µs (t_{SET}) delay between switching the two pins. If the SET0 and SET1 are used to change the reset timing, then a reset event must occur before the new timing condition is latched. This reset can be triggered by SENSE rising above $V_{IT+(OV)}$ or below $V_{IT-(UV)}$, or by bringing V_{DD} below V_{UVLO}. 图 7-7 shows how the SET0 and SET1 pins do not change the watchdog timing option until a reset event has occurred.

Copyright © 2021 Texas Instruments Incorporated

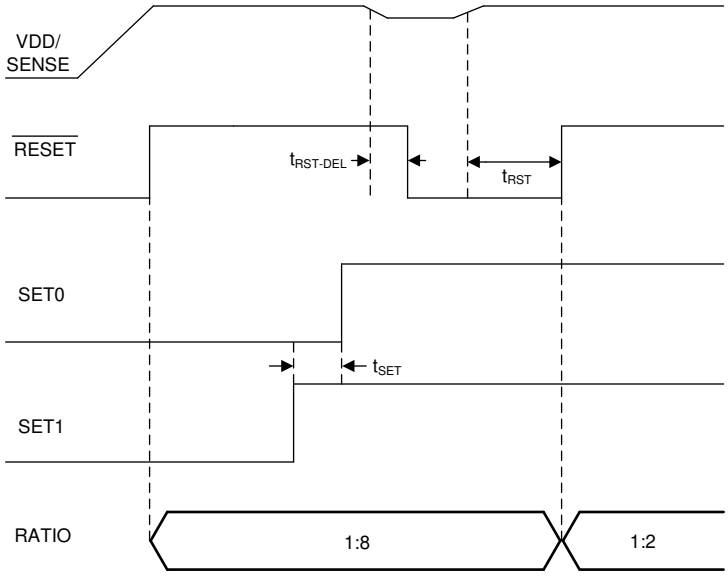

图 7-7. Changing SET0 and SET1 Pins

7.3.6 Window Watchdog Timer

This section provides information for the window watchdog modes of operation. A window watchdog is typically employed in safety critical applications where a traditional watchdog timer is inadequate. In a traditional watchdog, there is a maximum time in which a pulse must be issued to prevent the reset from occurring. However, in a window watchdog the pulse must be issued between a maximum lower window time ($t_{WDL(max)}$) and the minimum upper window time ($t_{WDU(min)}$) set by the CWD pin and the SET0 and SET1 pins. 表 8-5 describes how t_{WDU} can be used to calculate the timing of t_{WDL}. The t_{WDL} timing can also be changed by adjusting the SET0 and SET1 pins. 图 7-8 shows the valid region for a WDI pulse to be issued to prevent the $\overline{WDO}$ from being triggered and being pulled low.

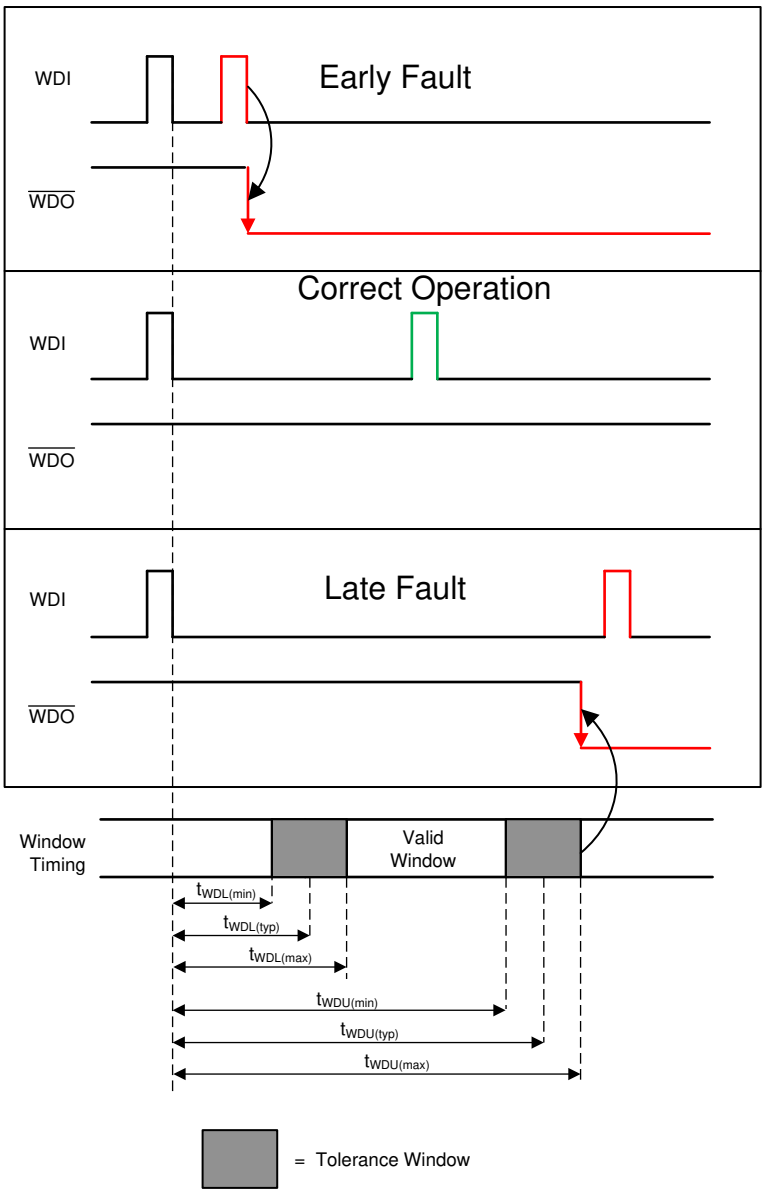

图 7-8. TPS3850 Window Watchdog Timing

Copyright © 2021 Texas Instruments Incorporated

7.3.6.1 CWD

The CWD pin provides the user the functionality of both high-precision, factory-programmed watchdog timing options and user-programmable watchdog timing. The TPS3850 features three options for setting the watchdog window: connecting a capacitor to the CWD pin, connecting a pullup resistor to VDD, and leaving the CWD pin unconnected. The configuration of the CWD pin is evaluated by the device every time V_{SENSE} enters the valid window ($V_{IT+(UV)}$ < V_{SENSE} < $V_{IT-(OV)}$). The pin evaluation is controlled by an internal state machine that determines which option is connected to the CWD pin. The sequence of events takes 381 μs (t_{INIT}) to determine if the CWD pin is left unconnected, pulled up through a resistor, or connected to a capacitor. If the CWD pin is being pulled up to VDD using a pullup resistor, then a 10-kΩ resistor is required.

7.3.6.2 WDI Functionality

WDI is the watchdog timer input that controls the $\overline{WDO}$ output. The WDI input is triggered by the falling edge of the input signal. For the first pulse, the watchdog acts as a traditional watchdog timer; thus, the first pulse must be issued before $t_{WDU(min)}$. After the first pulse, to ensure proper functionality of the watchdog timer, always issue the WDI pulse within the window of $t_{WDL(max)}$ and $t_{WDU(min)}$. If the pulse is issued in this region, then $\overline{WDO}$ remains unasserted. Otherwise, the device asserts $\overline{WDO}$, putting the $\overline{WDO}$ pin into a low-impedance state.

The watchdog input (WDI) is a digital pin. To ensure there is no increase in I_{DD}, drive the WDI pin to either VDD or GND at all times. Putting the pin to an intermediate voltage can cause an increase in supply current (I_{DD}) because of the architecture of the digital logic gates. When $\overline{RESET}$ is asserted, the watchdog is disabled and all signals input to WDI are ignored. When $\overline{RESET}$ is no longer asserted, the device resumes normal operation and no longer ignores the signal on WDI. If the watchdog is disabled, drive the WDI pin to either VDD or GND.

7.3.6.3 $\overline{WDO}$ Functionality

The TPS3850 features a window watchdog timer with an independent watchdog output ($\overline{WDO}$). The independent watchdog output provides the flexibility to flag a fault in the watchdog timing without performing an entire system reset. When $\overline{RESET}$ is not asserted (high), the $\overline{WDO}$ signal maintains normal operation. When asserted, $\overline{WDO}$ remains down for t_{RST}. When the $\overline{RESET}$ signal is asserted (low), the $\overline{WDO}$ pin goes to a high-impedance state. When $\overline{RESET}$ is unasserted, the window watchdog timer resumes normal operation and $\overline{WDO}$ can be used again.

Copyright © 2021 Texas Instruments Incorporated

7.4 Device Functional Modes

表 7-1 summarizes the functional modes of the TPS3850.

表 7-1. Device Functional Modes

VDD	WDI	$\overline{WDO}$	SENSE	$\overline{RESET}$
$V_{DD} < V_{POR}$	—	—	—	Undefined
$V_{POR} \leqslant V_{DD} < V_{UVLO}$	Ignored	High	—	Low
$V_{DD} \geqslant V_{DD\ (min)}$	Ignored	High	$V_{SENSE} < V_{IT+(UV)}$ (1)	Low
	Ignored	High	$V_{SENSE} > V_{IT-(OV)}$ (1)	Low
	$t_{WDL(max)} \leqslant t_{pulse}$ (3) $\leqslant t_{WDU(min)}$	High	$V_{IT-(UV)} < V_{SENSE} < V_{IT+(OV)}$ (2)	High
	$t_{WDL(max)} > t_{pulse}$ (3)	Low	$V_{IT-(UV)} < V_{SENSE} < V_{IT+(OV)}$ (2)	High
	$t_{WDU(min)} < t_{pulse}$ (3)	Low	$V_{IT-(UV)} < V_{SENSE} < V_{IT+(OV)}$ (2)	High

(1) When V_{SENSE} has not entered the valid window.
(2) When V_{SENSE} is in the valid window.
(3) Where t_{pulse} is the time between falling edges on WDI.

7.4.1 V_{DD} is Below V_{POR} ($V_{DD} < V_{POR}$)

When V_{DD} is less than V_{POR}, $\overline{RESET}$ is undefined and can be either high or low. The state of $\overline{RESET}$ largely depends on the load that the $\overline{RESET}$ pin is experiencing.

7.4.2 Above Power-On-Reset But Less Than UVLO ($V_{POR} \leqslant V_{DD} < V_{UVLO}$)

When V_{DD} is less than V_{UVLO}, and greater than or equal to V_{POR}, the $\overline{RESET}$ signal is asserted (logic low) regardless of the voltage on the SENSE pin. When $\overline{RESET}$ is asserted, the watchdog output $\overline{WDO}$ is in a high-impedance state regardless of the WDI signal that is input to the device.

7.4.3 Above UVLO But Less Than $V_{DD\ (min)}$ ($V_{UVLO} \leqslant V_{DD} < V_{DD\ (min)}$)

When V_{DD} is less than $V_{DD\ (min)}$ and greater than or equal to V_{UVLO}, the $\overline{RESET}$ signal responds to changes on the SENSE pin, but the accuracy can be degraded.

7.4.4 Normal Operation ($V_{DD} \geqslant V_{DD\ (min)}$)

When V_{DD} is greater than or equal to $V_{DD\ (min)}$, the $\overline{RESET}$ signal is determined by V_{SENSE}. When $\overline{RESET}$ is asserted, $\overline{WDO}$ goes to a high-impedance state. $\overline{WDO}$ is then pulled high through the pullup resistor.

Copyright © 2021 Texas Instruments Incorporated

8 Application and Implementation

Note

以下应用部分中的信息不属于 TI 器件规格的范围，TI 不担保其准确性和完整性。TI 的客 户应负责确定器件是否适用于其应用。客户应验证并测试其设计，以确保系统功能。

8.1 Application Information

The following sections describe in detail proper device implementation, depending on the final application requirements.

8.1.1 CRST Delay

The TPS3850 features three options for setting the reset delay (t_{RST}): connecting a capacitor to the CRST pin, connecting a pullup resistor to VDD, and leaving the CRST pin unconnected. 图 8-1 shows a schematic drawing of all three options. To determine which option is connected to the CRST pin, an internal state machine controls the internal pulldown device and measures the pin voltage. This sequence of events takes 381 µs (t_{INIT}) to determine which timing option is used. Every time $\overline{RESET}$ is asserted, the state machine determines what is connected to the pin.

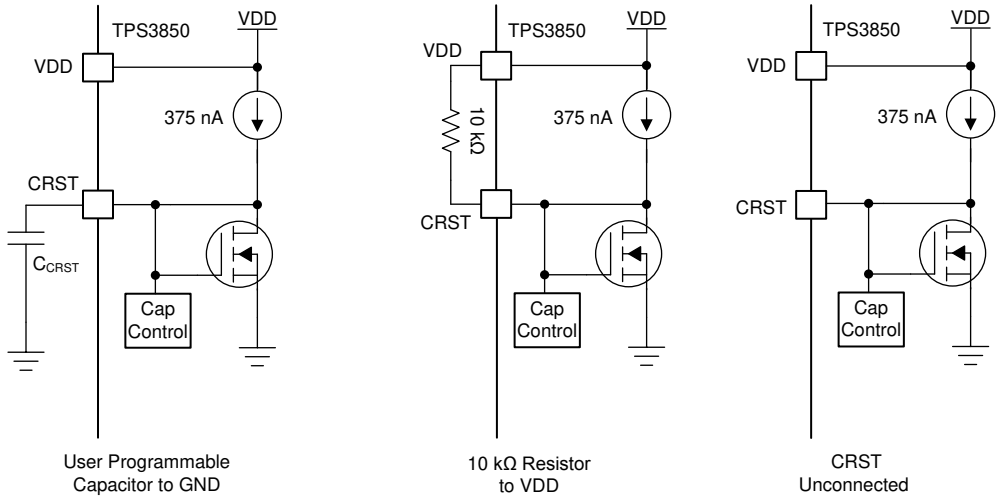

图 8-1. CRST Charging Circuit

8.1.1.1 Factory-Programmed Reset Delay Timing

To use the factory-programmed timing options, the CRST pin must either be left unconnected or pulled up to VDD through a 10-kΩ pullup resistor. Using these options enables a high-precision, 15% accurate reset delay timing, as shown in 表 8-1.

表 8-1. Reset Delay Time for Factory-Programmed Reset Delay Timing

CRST	$\overline{RESET}$ DELAY TIME (t_{RST})			UNIT
	MIN	TYP	MAX	
NC	170	200	230	ms
10 kΩ to VDD	8.5	10	11.5	ms

8.1.1.2 Programmable Reset Delay-Timing

The TPS3850 uses a CRST pin charging current (I_{CRST}) of 375 nA. When using an external capacitor, the rising $\overline{RESET}$ delay time can be set to any value between 700 µs (C_{CRST} = 100 pF) and 3.2 seconds (C_{CRST} = 1 µF). The typical ideal capacitor value needed for a given delay time can be calculated using 方程式 3, where C_{CRST} is in microfarads and t_{RST} is in seconds:

$$t_{RST} = 3.22 \times C_{CRST} + 0.000381 \quad (3)$$

To calculate the minimum and maximum-reset delay time use 方程式 4 and 方程式 5, respectively.

$$t_{RST(min)} = 2.8862 \times C_{CRST} + 0.000324 \quad (4)$$

$$t_{RST(max)} = 3.64392 \times C_{CRST} + 0.000438 \quad (5)$$

The slope of 方程式 3 is determined by the time the CRST charging current (I_{CRST}) takes to charge the external capacitor up to the CRST comparator threshold voltage (V_{CRST}). When $\overline{RESET}$ is asserted, the capacitor is discharged through the internal CRST pulldown resistor. When the $\overline{RESET}$ conditions are cleared, the internal precision current source is enabled and begins to charge the external capacitor; when V_{CRST} = 1.21 V, $\overline{RESET}$ is unasserted. Note that to minimize the difference between the calculated $\overline{RESET}$ delay time and the actual $\overline{RESET}$ delay time, use a use a high-quality ceramic dielectric COG, X5R, or X7R capacitor and minimize parasitic board capacitance around this pin. 表 8-2 lists the reset delay time ideal capacitor values for C_{CRST}.

表 8-2. Reset Delay Time for Common Ideal Capacitor Values

C_{CRST}	$\overline{RESET}$ DELAY TIME (t_{RST})			UNIT
	MIN(1)	TYP	MAX(1)	
100 pF	0.61	0.70	0.8	ms
1 nF	3.21	3.61	4.08	ms
10 nF	29.2	32.6	36.8	ms
100 nF	289	323	364	ms
1 µF	2886	3227	3644	ms

(1) Minimum and maximum values are calculated using ideal capacitors.

8.1.2 CWD Functionality

The TPS3850 features three options for setting the watchdog window: connecting a capacitor to the CWD pin, connecting a pullup resistor to VDD, and leaving the CWD pin unconnected. 图 8-2 shows a schematic drawing of all three options. If this pin is connected to VDD through a 10-kΩ pullup resistor or left unconnected (high impedance), then the factory-programmed watchdog timeouts are enabled; see the *节 6.6* table. Otherwise, the watchdog timeout can be adjusted by placing a capacitor from the CWD pin to ground.

Copyright © 2021 Texas Instruments Incorporated

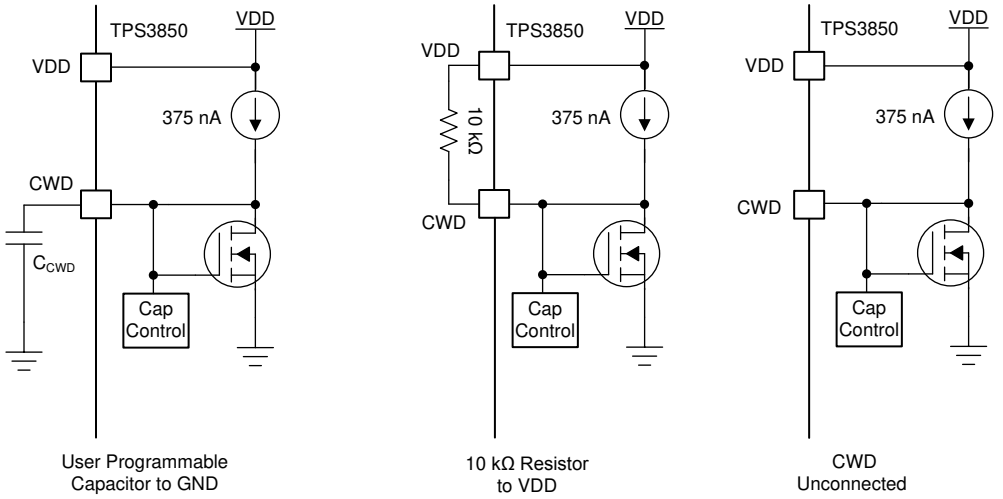

图 8-2. CWD Charging Circuit

8.1.2.1 Factory-Programmed Timing Options

If using the factory-programmed timing options (listed in 表 8-3), the CWD pin must either be unconnected or pulled up to VDD through a 10-kΩ pullup resistor. Using these options enables high-precision, factory-programmed watchdog timing.

表 8-3. Factory-Programmed Watchdog Timing

INPUT			WATCHDOG LOWER BOUNDARY (t_{WDL})			WATCHDOG UPPER BOUNDARY (t_{WDU})			UNIT
CWD	SET0	SET1	MIN	TYP	MAX	MIN	TYP	MAX	
NC	0	0	19.1	22.5	25.9	46.8	55.0	63.3	ms
	0	1	1.48	1.85	2.22	23.375	27.5	31.625	ms
	1	0	Watchdog disabled			Watchdog disabled			
	1	1	680	800	920	1360	1600	1840	ms
10 kΩ to VDD	0	0	7.65	9.0	10.35	92.7	109.0	125.4	ms
	0	1	7.65	9.0	10.35	165.8	195.0	224.3	ms
	1	0	Watchdog disabled			Watchdog disabled			
	1	1	1.48	1.85	2.22	9.35	11.0	12.65	ms

8.1.2.2 Adjustable Capacitor Timing

Adjustable capacitor timing is achievable by connecting a capacitor to the CWD pin. If a capacitor is connected to CWD, then a 375-nA constant-current source charges C_{CWD} until V_{CWD} = 1.21 V. The TPS3850 determines the window watchdog upper boundary with the formula given in 方程式 6, where C_{CWD} is in microfarads and t_{WDU} is in seconds.

$$t_{WDU(typ)} = 77.4 \times C_{CWD} + 0.055 \quad (6)$$

The TPS3850 is designed and tested using C_{CWD} capacitors between 100 pF and 1 µF. Note that 方程式 6 is for ideal capacitors. Capacitor tolerances cause the actual device timing to vary such that the minimum of t_{WDU} can decrease and the maximum of t_{WDU} can increase by the capacitor tolerance. To allow for a valid watchdog window, choose a capacitor with tolerance such that $t_{WDU(min)}$ and $t_{WDL(max)}$ do not overlap. For the most accurate timing, use ceramic capacitors with COG dielectric material. As shown in 表 8-4, when using the minimum capacitor of 100 pF, the watchdog upper boundary is 62.74 ms; whereas with a 1-µF capacitor, the watchdog upper boundary is 77.455 seconds. If a C_{CWD} capacitor is used, 方程式 6 can be used to set t_{WDU} the window watchdog upper boundary. The window watchdog lower boundary is dependent on the SET0 and SET1 pins because these pins set the window watchdog ratio of the lower boundary to upper boundary; 表 8-5 shows how t_{WDU} can be used to calculate t_{WDL} based on the SET0 and SET1 pins.

Copyright © 2021 Texas Instruments Incorporated

表 8-4. t_{WDU} Values for Common Ideal Capacitor Values

C_{CWD}	WATCHDOG UPPER BOUNDARY (t_{WDU})			UNIT
	MIN(1)	TYP	MAX(1)	
100 pF	56.77	62.74	68.7	ms
1 nF	119.82	132.4	144.98	ms
10 nF	750	829	908	ms
100 nF	7054	7795	8536	ms
1 µF	70096	77455	84814	ms

(1) Minimum and maximum values are calculated using ideal capacitors.

表 8-5. Programmable CWD Timing

INPUT			WATCHDOG LOWER BOUNDARY (t_{WDL})			WATCHDOG UPPER BOUNDARY (t_{WDU})			UNIT
CWD	SET0	SET1	MIN	TYP	MAX	MIN(2)	TYP(1)	MAX(2)	
C_{CWD}	0	0	$t_{WDU(min)}$ x 0.125	t_{WDU} x 0.125	$t_{WDU(max)}$ x 0.125	0.905 x $t_{WDU(typ)}$	$t_{WDU(typ)}$	1.095 x $t_{WDU(typ)}$	s
	0	1	$t_{WDU(min)}$ x 0.75	t_{WDU} x 0.75	$t_{WDU(max)}$ x 0.75	0.905 x $t_{WDU(typ)}$	$t_{WDU(typ)}$	1.095 x $t_{WDU(typ)}$	s
	1	0	Watchdog disabled			Watchdog disabled			
	1	1	$t_{WDU(min)}$ x 0.5	t_{WDU} x 0.5	$t_{WDU(max)}$ x 0.5	0.905 x $t_{WDU(typ)}$	$t_{WDU(typ)}$	1.095 x $t_{WDU(typ)}$	s

(1) Calculated from 方程式 6 using ideal capacitors.
(2) The $t_{WDU(min)}$ and $t_{WDU(max)}$ include I_{CWD} and V_{CWD} minimum to maximum variation

8.1.3 Adjustable SENSE Configuration

The TPS3850H01 has an undervoltage supervisor that can monitor voltage rails greater than 0.4 V. 表 8-6 contains 1% resistor values for creating a voltage divider to monitor common rails from 0.5 V to 12 V with a threshold of 4% and 10%. These resistor values can be scaled to decrease the amount of current flowing through the resistor divider, but increasing the resistor values also decreases the accuracy of the resistor divider. General practice is for the current flowing through the resistor divider to be 100 times greater than the current going into the SENSE pin. This practice ensures the highest possible accuracy. 方程式 7 can be used to calculate the resistors required in the resistor divider. 图 8-3 shows the block diagram for adjustable operation.

$$V_{MON} = V_{IT(ADJ)} \times \left(1 + \frac{R_1}{R_2}\right) \quad (7)$$

表 8-6. SENSE Resistor Divider Values

INPUT VOLTAGE (V)	4% THRESHOLD			10% THRESHOLD		
	R_1 (kΩ)	R_2 (kΩ)	THRESHOLD VOLTAGE (V)	R_1 (kΩ)	R_2 (kΩ)	THRESHOLD VOLTAGE (V)
0.5	16.2	80.6	0.48	10	80.6	0.45
0.8	75	80.6	0.77	64.9	80.6	0.72
0.9	93.1	80.6	0.86	82.5	80.6	0.81
1.2	150	80.6	1.14	137	80.6	1.08
1.8	267	80.6	1.73	249	80.6	1.64
2.5	402	80.6	2.40	374	80.6	2.26
3	499	80.6	2.88	464	80.6	2.70
3.3	562	80.6	3.19	523	80.6	2.99
5	887	80.6	4.80	825	80.6	4.49
12	2260	80.6	11.62	2100	80.6	10.82

Copyright © 2021 Texas Instruments Incorporated

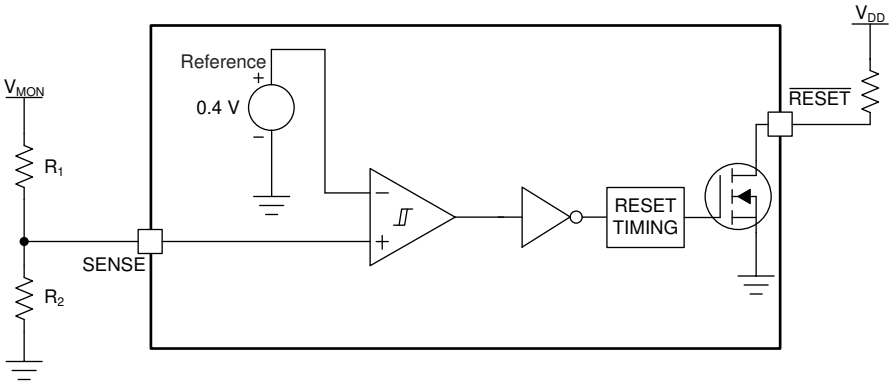

图 8-3. Adjustable Voltage Divider

8.1.4 Overdrive on the SENSE Pin

The propagation delay from exceeding the threshold to $\overline{\text{RESET}}$ being asserted is dependent on two conditions: the amplitude of the voltage on the SENSE pin relative to the threshold, (ΔV_1 and ΔV_2), and the length of time that the voltage is above or below the trip point (t_1 and t_2). If the voltage is just over the trip point for a long period of time, then $\overline{\text{RESET}}$ asserts and the output is pulled low. However, if the SENSE voltage is just over the trip point for a few nanoseconds, then the $\overline{\text{RESET}}$ does not assert and the output remains high. The time required for $\overline{\text{RESET}}$ to assert can be changed by increasing the time that the SENSE voltage goes over the trip point. 方程式 8 shows how to calculate the percentage overdrive.

$$\text{Overdrive} = | (V_{SENSE} / V_{ITx} - 1) \times 100\% | \quad (8)$$

In 方程式 8, V_{ITx} corresponds to the SENSE threshold trip point. If V_{SENSE} exceeds the positive threshold, then $V_{IT+(OV)}$ is used. $V_{IT-(UV)}$ is used when V_{SENSE} falls below the negative threshold. In 图 8-4, t_1 and t_2 correspond to the amount of time that the SENSE voltage is over the threshold. The response time versus overdrive for $V_{IT+(OV)}$ and $V_{IT-(UV)}$ is illustrated in 图 6-14 and 图 6-17, respectively.

The TPS3850 is relatively immune to short positive and negative transients on the SENSE pin because of the overdrive voltage curve; see 图 6-20 and 图 6-21.

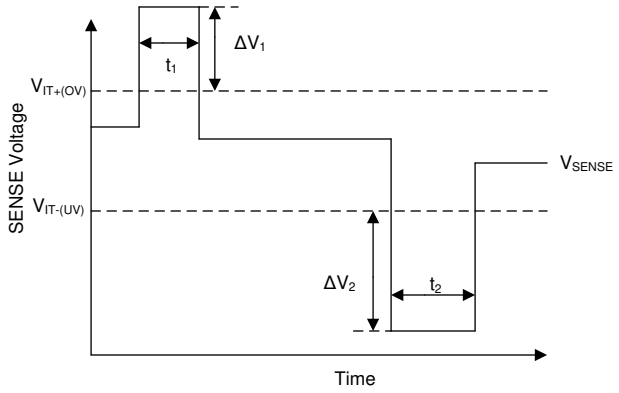

图 8-4. Overdrive Voltage on the SENSE Pin

Copyright © 2021 Texas Instruments Incorporated

8.2 Typical Applications

8.2.1 Design 1: Monitoring a 1.2-V Rail with Factory-Programmable Watchdog Timing

A typical application for the TPS3850 is shown in 图 8-5. The TPS3850G12 is used to monitor the 1.2-V, V_{CORE} rail powering the microcontroller.

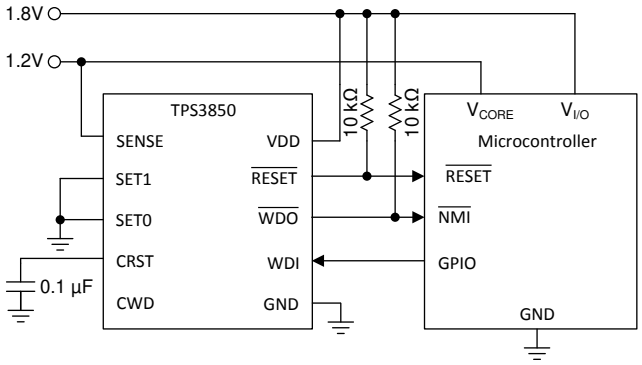

图 8-5. Monitoring Supply Voltage and Watchdog Supervision of a Microcontroller

8.2.1.1 Design Requirements

PARAMETER	DESIGN REQUIREMENT	DESIGN RESULT
Reset delay	Minimum reset delay of 250 ms	Minimum reset delay of 260 ms, reset delay of 322 ms (typical)
Watchdog window	Functions with a 200-Hz pulse-width modulation (PWM) signal with a 50% duty cycle	Leaving the CWD pin unconnected with SET0 = 0 and SET1 = 1 produces a window with a $t_{WDL(max)}$ of 2.2 ms and a $t_{WDU(min)}$ of 22 ms
Output logic voltage	1.8-V CMOS	1.8-V CMOS
Monitored rail	1.2 V within ±5%	Worst-case $V_{IT+(OV)}$ 1.257 V (4.8%)
		Worst-case $V_{IT-(UV)}$ 1.142 V (4.7%)
Maximum device current consumption	200 µA	10 µA of current consumption, typical worst-case of 199 µA when $\overline{WDO}$ or $\overline{RESET}$ is asserted

8.2.1.2 Detailed Design Procedure

8.2.1.2.1 Monitoring the 1.2-V Rail

The window comparator allows for precise voltage supervision of common rails between 0.9 V and 5.0 V. This application calls for very tight monitoring of the rail with only ±5% of variation allowed on the rail. To ensure this requirement is met, the TPS3850G12 was chosen for its ±4% thresholds. To calculate the worst-case for $V_{IT+(OV)}$ and $V_{IT-(UV)}$, the accuracy must also be taken into account. The worst-case for $V_{IT+(OV)}$ can be calculated by 方程式 9:

$$V_{IT+(OV)(Worst\text{-}Case)} = V_{IT+(OV)typ} \times 1.048 = 1.2 \times 1.048 = 1.257\ V \quad (9)$$

The worst case for $V_{IT-(UV)}$ can be calculated using 方程式 10:

$$V_{IT-(UV)(Worst\text{-}Case)} = V_{IT-(UV)typ} \times 0.952 = 1.2 \times 0.952 = 1.142\ V \quad (10)$$

Copyright © 2021 Texas Instruments Incorporated

8.2.1.2.2 Meeting the Minimum Reset Delay

The TPS3850 features three options for setting the reset delay: connecting a capacitor to the CRST pin, connecting a pullup resistor, and leaving the CRST pin unconnected. If the CRST pin is either unconnected or pulled up the minimum timing requirement cannot be met, thus an external capacitor must be connected to the CRST pin. Because a minimum time is required, the worst-case scenario is a supervisor with a high CRST charging current (I_{CRST}) and a low CRST comparator threshold (V_{CRST}). For applications with ambient temperatures ranging from –40°C to +125°C, C_{CRST} can be calculated using $I_{CRST(MAX)}$, $V_{CRST(MIN)}$, and solving for C_{CRST} in 方程式 11:

$$C_{RST(min)_ideal} = \frac{t_{RST(min)} - 0.000324}{2.8862} = \frac{0.25 - 0.000324}{2.8862} \quad (11)$$

When solving 方程式 11, the minimum capacitance required at the CRST pin is 0.086 μF. If standard capacitors with ±10% tolerances are used, then the minimum CRST capacitor required can be found in 方程式 12:

$$C_{RST(min)} = \frac{C_{RST(min)_ideal}}{1 - C_{tolerance}} = \frac{0.086\ \mu F}{1 - 0.1} \quad (12)$$

Solving 方程式 12 where $C_{tolerance}$ is 0.1 or 10%, the minimum C_{CRST} capacitor is 0.096 μF. This value is then rounded up to the nearest standard capacitor value, so a 0.1-μF capacitor must be used to achieve this reset delay timing. If voltage and temperature derating are being considered, then also include these values in $C_{tolerance}$.

8.2.1.2.3 Setting the Watchdog Window

In this application, the window watchdog timing options are based on the PWM signal that is provided to the TPS3850. A window watchdog setting must be chosen such that the falling edge of the PWM signal always falls within the window. A nominal window must be designed with $t_{WDL(max)}$ less than 5 ms and $t_{WDU(min)}$ greater than 5 ms. There are several options that satisfy this window option. An external capacitor can be placed on the CWD pin and calculated to have a sufficient window. Another option is to use one of the factory-programmed timing options. An additional advantage of choosing one of the factory-programmed options is the ability to reduce the number of components required, thus reducing overall BOM cost. Leaving the CWD pin unconnected (NC) with SET0 = 0 and SET1 = 1 produces a $t_{WDL(max)}$ of 2.22 ms and a $t_{WDU(min)}$ of 23.375 ms; see 图 8-10.

Copyright © 2021 Texas Instruments Incorporated

8.2.1.2.4 Calculating the $\overline{\text{RESET}}$ and $\overline{\text{WDO}}$ Pullup Resistor

The TPS3850 uses an open-drain configuration for the $\overline{\text{RESET}}$ circuit, as shown in 图 8-6. When the FET is off, the resistor pulls the drain of the transistor to VDD and when the FET is turned on, the FET attempts to pull the drain to ground, thus creating an effective resistor divider. The resistors in this divider must be chosen to ensure that V_{OL} is below its maximum value. To choose the proper pullup resistor, there are three key specifications to keep in mind: the pullup voltage (V_{PU}), the recommended maximum $\overline{\text{RESET}}$ pin current (I_{RST}), and V_{OL}. The maximum V_{OL} is 0.4 V, meaning that the effective resistor divider created must be able to bring the voltage on the reset pin below 0.4 V with I_{RST} kept below 10 mA. For this example, with a V_{PU} of 1.8 V, a resistor must be chosen to keep I_{RST} below 200 μA because this value is the maximum consumption current allowed. To ensure this specification is met, a pullup resistor value of 10 kΩ was selected, which sinks a maximum of 180 μA when $\overline{\text{RESET}}$ or $\overline{\text{WDO}}$ is asserted. As illustrated in 图 6-12, the $\overline{\text{RESET}}$ current is at 180 μA and the low-level output voltage is approximately zero.

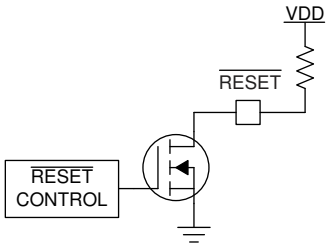

图 8-6. Open-Drain $\overline{\text{RESET}}$ Configuration

8.2.1.3 Application Curves

Unless otherwise stated, application curves were taken at T_A = 25°C.

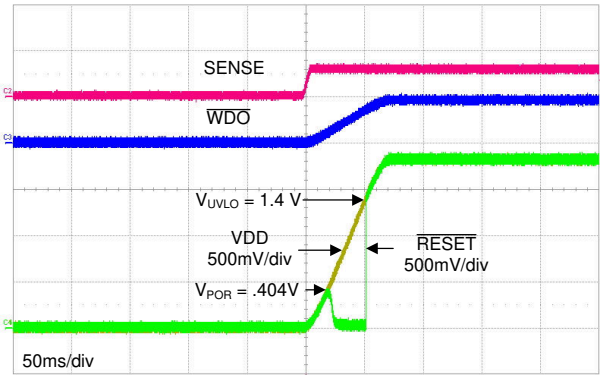

图 8-7. Startup Waveform

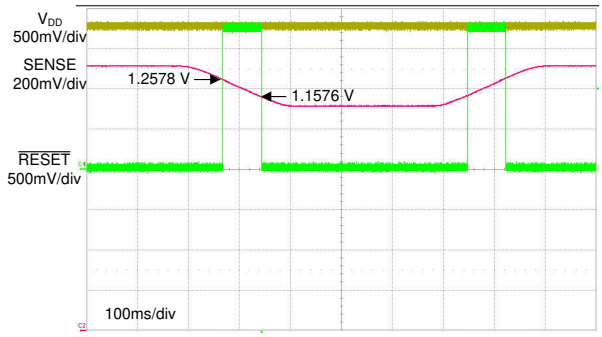

图 8-8. Window Comparator Thresholds Entering a Valid Window

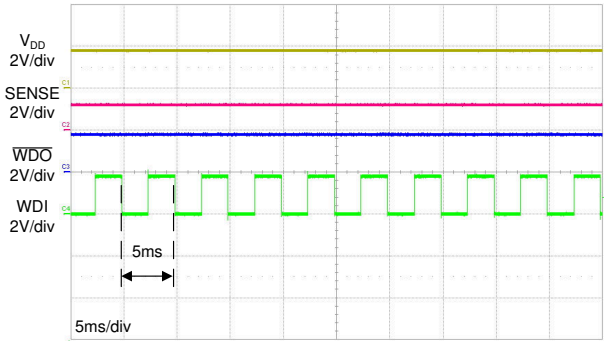

图 8-9. 200-Hz WDI Pulse

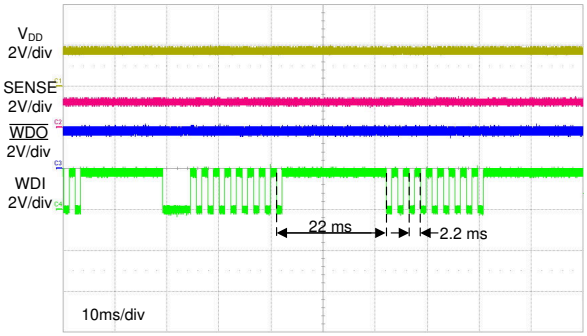

图 8-10. Window Watchdog Timing

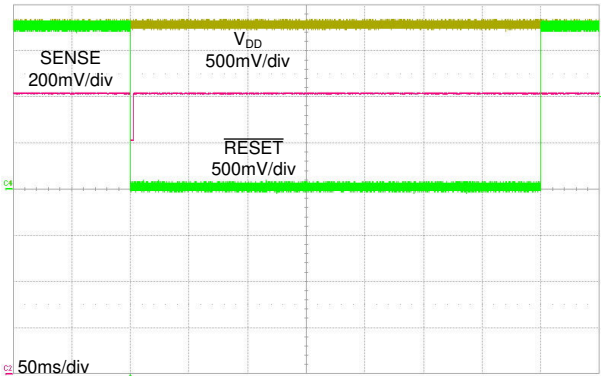

图 8-11. Typical $\overline{\text{RESET}}$ Delay Timing

Copyright © 2021 Texas Instruments Incorporated

8.2.2 Design 2: Using TPS3850H01 to monitor a 0.7-V Rail With an Adjustable Window Watchdog Timing

A typical application for the TPS3850H01 is shown in 图 8-12.

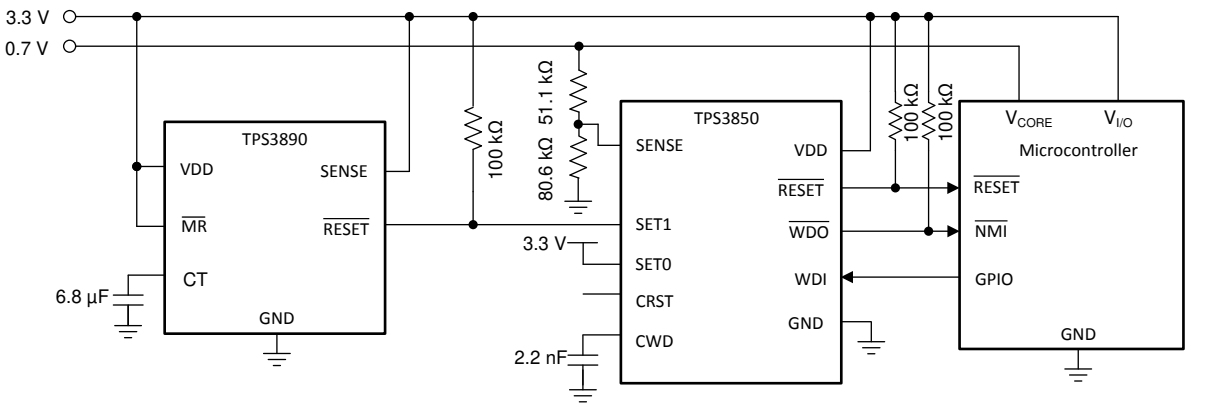

Copyright © 2016, Texas Instruments Incorporated

图 8-12. Monitoring Supply Voltage and Watchdog Supervision of a Microcontroller

8.2.2.1 Design Requirements

PARAMETER	DESIGN REQUIREMENT	DESIGN RESULT
Reset delay	Minimum $\overline{\text{RESET}}$ delay of 150 ms	Minimum $\overline{\text{RESET}}$ delay of 170 ms
Watchdog disable for initialization period	Watchdog must remain disabled for 7 seconds until logic enables the watchdog timer	7.21 seconds (typ)
Watchdog window	250 ms, maximum	$t_{WDL(max)}$ = 135 ms, $t_{WDU(min)}$ = 181 ms
Output logic voltage	3.3-V CMOS	3.3-V CMOS
Monitored rail	0.7 V, with 7% threshold	$V_{ITN\ (max)}$ 0.667 V (– 4.7%)
		$V_{ITN\ (typ)}$ 0.65 V (– 6.6%)
		$V_{ITN\ (min)}$ 0.641 V (– 8.5%)
Maximum device current consumption	50 µA	10 µA of current consumption typical, worst-case of 52 µA when $\overline{\text{WDO}}$ or $\overline{\text{RESET}}$ is asserted(1)

(1) Only includes the current consumption of the TPS3850.

8.2.2.2 Detailed Design Procedure

8.2.2.2.1 Meeting the Minimum Reset Delay

The design goal for the $\overline{\text{RESET}}$ delay time can be achieved by either using an external capacitor or the CRST pin can be left unconnected. To minimize component count, the CRST pin is left unconnected. For CRST = NC, the minimum delay is 170 ms, which is greater than the minimum required $\overline{\text{RESET}}$ delay of 150 ms.

8.2.2.2.2 Setting the Window Watchdog

As illustrated in 图 8-2, there are three options for setting the window watchdog. The design specifications in this application require the programmable timing option (external capacitor connected to CWD). When a capacitor is connected to the CWD pin, the window is governed by 方程式 13. 方程式 13 is only valid for ideal capacitors, any temperature or voltage derating must be accounted for separately.

$$C_{CWD}\,(\mu F) = \frac{t_{WDU} - 0.055}{77.4} = \frac{0.25 - 0.055}{77.4} = 0.0025\ \mu F \tag{13}$$

The nearest standard capacitor value to 2.5 nF is 2.2 nF. Selecting 2.2 nF for the C_{CWD} capacitor gives the following minimum and maximum timing parameters:

$$t_{WDU(MIN)} = 0.905 \times t_{WDU(TYP)} = 0.905 \times \left(77.4 \times 2.2 \times 10^{-3} + 0.055\right) = 203.88 \text{ ms} \quad (14)$$

$$t_{WDL(MAX)} = 0.5 \times t_{WDU(MAX)} = 0.5 \times \left[1.05 \times \left(77.4 \times 2.2 \times 10^{-3} + 0.055\right)\right] = 118 \text{ ms} \quad (15)$$

Capacitor tolerance also influence $t_{WDU(MIN)}$ and $t_{WDL(MAX)}$. Select a ceramic COG dielectric capacitor for high accuracy. For 2.2 nF, COG capacitors are readily available with a 5% tolerance, which results in a 5% decrease in $t_{WDU(MIN)}$ and a 5% increase in $t_{WDL(MAX)}$, giving 181 ms and 135 ms, respectively. A falling edge must be issued within this window.

8.2.2.2.3 Watchdog Disabled During the Initialization Period

The watchdog is often needed to be disabled during startup to allow for an initialization period. When the initialization period is over, the watchdog timer is turned back on to allow the microcontroller to be monitored by the TPS3850. To achieve this setup, SET0 must start at VDD and SET1 must start at GND. In this design, SET0 is simply tied to VDD and SET1 is controlled by a TPS3890 supervisor. In this application, the TPS3890 was chosen to monitor V_{DD} as well, which means that $\overline{\text{RESET}}$ on the TPS3890 stays low until V_{DD} rises above V_{ITN}. When V_{DD} comes up, the delay time can be adjusted through the CT capacitor on the TPS3890. With this approach, the $\overline{\text{RESET}}$ delay can be adjusted from a minimum of 25 µs to a maximum of 30 seconds. For this design, a minimum delay of 7 seconds is needed until the watchdog timer is enabled. The CT capacitor calculation (see the TPS3890 data sheet) yields an ideal capacitance of 6.59 µF, giving a closest standard ceramic capacitor value of 6.8 µF. When connecting a 6.8-µF capacitor from CT to GND, the typical delay time is 7.21 seconds. 图 8-13 illustrates the typical startup waveform for this circuit when the watchdog input is off. 图 8-13 illustrates that when the watchdog is disabled, the $\overline{\text{WDO}}$ output remains high. See the TPS3890 data sheet for detailed information on the TPS3890.

8.2.2.2.4 Calculating the Sense Resistor

There are three key specifications to keep in mind when calculating the resistor divider values (R_1 and R_2, see 图 7-4 or 图 8-3): voltage threshold ($V_{IT(ADJ)}$), resistor tolerance, and the SENSE pin current (I_{SENSE}). To ensure that no accuracy is lost because of I_{SENSE}, the current through the resistor divider must be 100 times greater than I_{SENSE}. Starting with R_2 = 80.6 kΩ provides a 5-µA resistor divider current when V_{SENSE} = 0.4 V. To calculate the nominal resistor values, use 方程式 16:

$$V_{ITN} = V_{IT(ADJ)} + R_1 \frac{V_{IT(ADJ)}}{R_2} \quad (16)$$

where

- V_{ITN} is the monitored falling threshold voltage and
- $V_{IT(ADJ)}$ is the threshold voltage on the SENSE pin

Solving 方程式 16 for R_1 gives the nearest 1% resistor of 51.1 kΩ. Now, plug R_1 back into 方程式 16 to get the monitored threshold. With these resistor values, the nominal threshold is 0.65 V or 6.6%.

Copyright © 2021 Texas Instruments Incorporated

To calculate the minimum and maximum threshold variation including the tolerances of the resistors, threshold voltage, and sense current, use 方程式 17 and 方程式 18.

$$V_{ITN(min)} = V_{IT(ADJ)min} + R_{1(min)}\left(\frac{V_{IT(ADJ)min}}{R_{2(max)}} + I_{SENSE(min)}\right) = 0.641\ V \quad (17)$$

$$V_{ITN(max)} = V_{IT(ADJ)max} + R_{1(max)}\left(\frac{V_{IT(ADJ)max}}{R_{2(min)}} + I_{SENSE(max)}\right) = 0.667\ V \quad (18)$$

where

- V_{ITN} is the falling monitored threshold voltage
- $V_{IT(ADJ)}$ is the sense voltage threshold and
- I_{SENSE} is the sense pin current

The calculated tolerance on R_1 and R_2 is 1%.

8.2.2.3 Application Curves

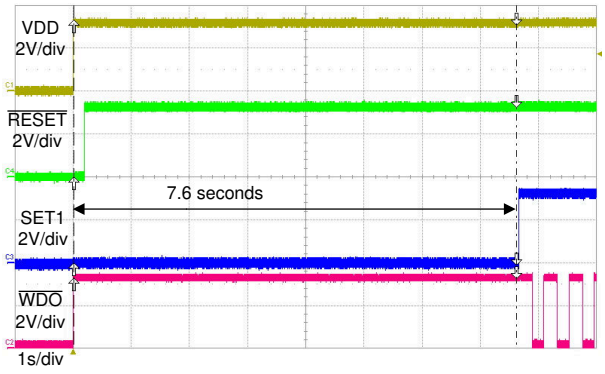

图 8-13. Startup Without a WDI Signal

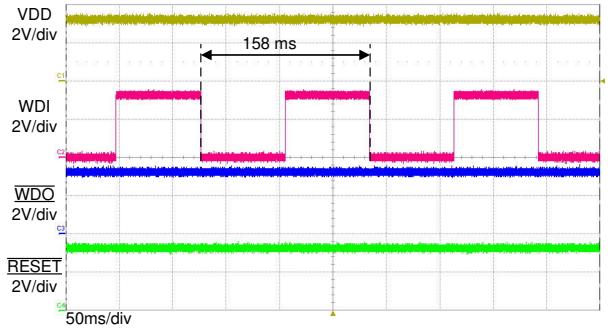

图 8-14. Typical WDI Signal

9 Power Supply Recommendations

This device is designed to operate from an input supply with a voltage range between 1.6 V and 6.5 V. An input supply capacitor is not required for this device; however, if the input supply is noisy, then good analog practice is to place a 0.1-µF capacitor between the VDD pin and the GND pin.

Copyright © 2021 Texas Instruments Incorporated

10 Layout

10.1 Layout Guidelines

Make sure that the connection to the VDD pin is low impedance. Good analog design practice recommends placing a 0.1-µF ceramic capacitor as near as possible to the VDD pin. If a capacitor is not connected to the CRST pin, then minimize parasitic capacitance on this pin so the $\overline{\text{RESET}}$ delay time is not adversely affected.

- Make sure that the connection to the VDD pin is low impedance. Good analog design practice is to place a 0.1-µF ceramic capacitor as near as possible to the VDD pin.
- If a C_{CRST} capacitor or pullup resistor is used, place these components as close as possible to the CRST pin. If the CRST pin is left unconnected, make sure to minimize the amount of parasitic capacitance on the pin.
- If a C_{CWD} capacitor or pullup resistor is used, place these components as close as possible to the CWD pin. If the CWD pin is left unconnected, make sure to minimize the amount of parasitic capacitance on the pin.
- Place the pullup resistors on $\overline{\text{RESET}}$ and $\overline{\text{WDO}}$ as close to the pin as possible.

10.2 Layout Example

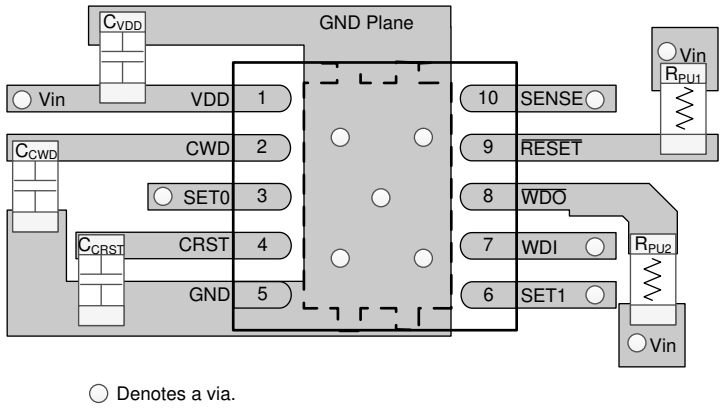

图 10-1. Typical Layout for the TPS3850

Copyright © 2021 Texas Instruments Incorporated

11 Device and Documentation Support

11.1 Device Support

11.1.1 Device Nomenclature

表 11-1. Device Nomenclature

DESCRIPTION	NOMENCLATURE	VALUE
TPS3850 (high-accuracy supervisor with window watchdog)	—	—
X (nominal thresholds as a percent of the nominal monitored voltage)	G	$V_{IT+(OV)}$ = 4%; $V_{IT-(UV)}$ = –4%
	H	$V_{IT+(OV)}$ = 7%; $V_{IT-(UV)}$ = –7%
yy(y) (nominal monitored voltage option)	01	0.4 V
	09	0.9 V
	115	1.15 V
	12	1.2 V
	18	1.8 V
	25	2.5 V
	30	3.0 V
	33	3.3 V
	50	5.0 V

11.2 Documentation Support

11.2.1 Related Documentation

For related documentation see the following:

- *TPS3890 Low Quiescent Current, 1% Accurate Supervisor with Programmable Delay*
- *Optimizing Resistor Dividers at a Comparator Input*
- *TPS3850EVM-781 Evaluation Module*

11.3 接收文档更新通知

要接收文档更新通知，请导航至 ti.com 上的器件产品文件夹。点击 *订阅更新* 进行注册，即可每周接收产品信息更改摘要。有关更改的详细信息，请查看任何已修订文档中包含的修订历史记录。

11.4 支持资源

TI E2E™ 支持论坛是工程师的重要参考资料，可直接从专家获得快速、经过验证的解答和设计帮助。搜索现有解答或提出自己的问题可获得所需的快速设计帮助。

链接的内容由各个贡献者“按原样”提供。这些内容并不构成 TI 技术规范，并且不一定反映 TI 的观点；请参阅 TI 的《使用条款》。

11.5 Trademarks

TI E2E™ is a trademark of Texas Instruments.
所有商标均为其各自所有者的财产。

11.6 Electrostatic Discharge Caution



This integrated circuit can be damaged by ESD. Texas Instruments recommends that all integrated circuits be handled with appropriate precautions. Failure to observe proper handling and installation procedures can cause damage.

ESD damage can range from subtle performance degradation to complete device failure. Precision integrated circuits may be more susceptible to damage because very small parametric changes could cause the device not to meet its published specifications.

11.7 术语表

TI 术语表　　本术语表列出并解释了术语、首字母缩略词和定义。

Copyright © 2021 Texas Instruments Incorporated

12 Mechanical, Packaging, and Orderable Information

The following pages include mechanical, packaging, and orderable information. This information is the most current data available for the designated devices. This data is subject to change without notice and revision of this document. For browser-based versions of this data sheet, refer to the left-hand navigation.

Copyright © 2021 Texas Instruments Incorporated

重要声明和免责声明

TI 提供技术和可靠性数据（包括数据表）、设计资源（包括参考设计）、应用或其他设计建议、网络工具、安全信息和其他资源，不保证没有瑕疵且不做出任何明示或暗示的担保，包括但不限于对适销性、某特定用途方面的适用性或不侵犯任何第三方知识产权的暗示担保。

这些资源可供使用 TI 产品进行设计的熟练开发人员使用。您将自行承担以下全部责任：(1) 针对您的应用选择合适的 TI 产品，(2) 设计、验证并测试您的应用，(3) 确保您的应用满足相应标准以及任何其他安全、安保或其他要求。这些资源如有变更，恕不另行通知。TI 授权您仅可将这些资源用于研发本资源所述的 TI 产品的应用。严禁对这些资源进行其他复制或展示。您无权使用任何其他 TI 知识产权或任何第三方知识产权。您应全额赔偿因在这些资源的使用中对 TI 及其代表造成的任何索赔、损害、成本、损失和债务，TI 对此概不负责。

TI 提供的产品受 TI 的销售条款 (https:www.ti.com/legal/termsofsale.html) 或 ti.com 上其他适用条款/TI 产品随附的其他适用条款的约束。TI 提供这些资源并不会扩展或以其他方式更改 TI 针对 TI 产品发布的适用的担保或担保免责声明。

邮寄地址：Texas Instruments, Post Office Box 655303, Dallas, Texas 75265
Copyright © 2021，德州仪器 (TI) 公司

PACKAGING INFORMATION

Orderable Device	Status (1)	Package Type	Package Drawing	Pins	Package Qty	Eco Plan (2)	Lead finish/ Ball material (6)	MSL Peak Temp (3)	Op Temp (°C)	Device Marking (4/5)	Samples
TPS3850G12DRCR	ACTIVE	VSON	DRC	10	3000	RoHS & Green	NIPDAU	Level-1-260C-UNLIM	-40 to 125	850CA	Samples
TPS3850G12DRCT	ACTIVE	VSON	DRC	10	250	RoHS & Green	NIPDAU	Level-1-260C-UNLIM	-40 to 125	850CA	Samples
TPS3850G18DRCR	ACTIVE	VSON	DRC	10	3000	RoHS & Green	NIPDAU	Level-1-260C-UNLIM	-40 to 125	850DA	Samples
TPS3850G18DRCT	ACTIVE	VSON	DRC	10	250	RoHS & Green	NIPDAU	Level-1-260C-UNLIM	-40 to 125	850DA	Samples
TPS3850G30DRCR	ACTIVE	VSON	DRC	10	3000	RoHS & Green	NIPDAU	Level-1-260C-UNLIM	-40 to 125	850FA	Samples
TPS3850G30DRCT	ACTIVE	VSON	DRC	10	250	RoHS & Green	NIPDAU	Level-1-260C-UNLIM	-40 to 125	850FA	Samples
TPS3850G33DRCR	ACTIVE	VSON	DRC	10	3000	RoHS & Green	NIPDAU	Level-1-260C-UNLIM	-40 to 125	850GA	Samples
TPS3850G33DRCT	ACTIVE	VSON	DRC	10	250	RoHS & Green	NIPDAU	Level-1-260C-UNLIM	-40 to 125	850GA	Samples
TPS3850G50DRCR	ACTIVE	VSON	DRC	10	3000	RoHS & Green	NIPDAU	Level-1-260C-UNLIM	-40 to 125	850HA	Samples
TPS3850G50DRCT	ACTIVE	VSON	DRC	10	250	RoHS & Green	NIPDAU	Level-1-260C-UNLIM	-40 to 125	850HA	Samples
TPS3850H01DRCR	ACTIVE	VSON	DRC	10	3000	RoHS & Green	NIPDAU	Level-1-260C-UNLIM	-40 to 125	850AA	Samples
TPS3850H01DRCT	ACTIVE	VSON	DRC	10	250	RoHS & Green	NIPDAU	Level-1-260C-UNLIM	-40 to 125	850AA	Samples
TPS3850H12DRCR	ACTIVE	VSON	DRC	10	3000	RoHS & Green	NIPDAU	Level-1-260C-UNLIM	-40 to 125	850KA	Samples
TPS3850H12DRCT	ACTIVE	VSON	DRC	10	250	RoHS & Green	NIPDAU	Level-1-260C-UNLIM	-40 to 125	850KA	Samples
TPS3850H18DRCR	ACTIVE	VSON	DRC	10	3000	RoHS & Green	NIPDAU	Level-1-260C-UNLIM	-40 to 125	850LA	Samples
TPS3850H18DRCT	ACTIVE	VSON	DRC	10	250	RoHS & Green	NIPDAU	Level-1-260C-UNLIM	-40 to 125	850LA	Samples
TPS3850H30DRCR	ACTIVE	VSON	DRC	10	3000	RoHS & Green	NIPDAU	Level-1-260C-UNLIM	-40 to 125	850NA	Samples
TPS3850H30DRCT	ACTIVE	VSON	DRC	10	250	RoHS & Green	NIPDAU	Level-1-260C-UNLIM	-40 to 125	850NA	Samples
TPS3850H33DRCR	ACTIVE	VSON	DRC	10	3000	RoHS & Green	NIPDAU	Level-1-260C-UNLIM	-40 to 125	850PA	Samples
TPS3850H33DRCT	ACTIVE	VSON	DRC	10	250	RoHS & Green	NIPDAU	Level-1-260C-UNLIM	-40 to 125	850PA	Samples

Orderable Device	Status (1)	Package Type	Package Drawing	Pins	Package Qty	Eco Plan (2)	Lead finish/ Ball material (6)	MSL Peak Temp (3)	Op Temp (°C)	Device Marking (4/5)	Samples
TPS3850H50DRCR	ACTIVE	VSON	DRC	10	3000	RoHS & Green	NIPDAU	Level-1-260C-UNLIM	-40 to 125	850RA	Samples
TPS3850H50DRCT	ACTIVE	VSON	DRC	10	250	RoHS & Green	NIPDAU	Level-1-260C-UNLIM	-40 to 125	850RA	Samples

(1) The marketing status values are defined as follows:
ACTIVE: Product device recommended for new designs.
LIFEBUY: TI has announced that the device will be discontinued, and a lifetime-buy period is in effect.
NRND: Not recommended for new designs. Device is in production to support existing customers, but TI does not recommend using this part in a new design.
PREVIEW: Device has been announced but is not in production. Samples may or may not be available.
OBSOLETE: TI has discontinued the production of the device.

(2) **RoHS:** TI defines "RoHS" to mean semiconductor products that are compliant with the current EU RoHS requirements for all 10 RoHS substances, including the requirement that RoHS substance do not exceed 0.1% by weight in homogeneous materials. Where designed to be soldered at high temperatures, "RoHS" products are suitable for use in specified lead-free processes. TI may reference these types of products as "Pb-Free".
RoHS Exempt: TI defines "RoHS Exempt" to mean products that contain lead but are compliant with EU RoHS pursuant to a specific EU RoHS exemption.
Green: TI defines "Green" to mean the content of Chlorine (Cl) and Bromine (Br) based flame retardants meet JS709B low halogen requirements of <=1000ppm threshold. Antimony trioxide based flame retardants must also meet the <=1000ppm threshold requirement.

(3) MSL, Peak Temp. - The Moisture Sensitivity Level rating according to the JEDEC industry standard classifications, and peak solder temperature.

(4) There may be additional marking, which relates to the logo, the lot trace code information, or the environmental category on the device.

(5) Multiple Device Markings will be inside parentheses. Only one Device Marking contained in parentheses and separated by a "~" will appear on a device. If a line is indented then it is a continuation of the previous line and the two combined represent the entire Device Marking for that device.

(6) Lead finish/Ball material - Orderable Devices may have multiple material finish options. Finish options are separated by a vertical ruled line. Lead finish/Ball material values may wrap to two lines if the finish value exceeds the maximum column width.

Important Information and Disclaimer: The information provided on this page represents TI's knowledge and belief as of the date that it is provided. TI bases its knowledge and belief on information provided by third parties, and makes no representation or warranty as to the accuracy of such information. Efforts are underway to better integrate information from third parties. TI has taken and continues to take reasonable steps to provide representative and accurate information but may not have conducted destructive testing or chemical analysis on incoming materials and chemicals. TI and TI suppliers consider certain information to be proprietary, and thus CAS numbers and other limited information may not be available for release.

In no event shall TI's liability arising out of such information exceed the total purchase price of the TI part(s) at issue in this document sold by TI to Customer on an annual basis.

OTHER QUALIFIED VERSIONS OF TPS3850 :

- Automotive : TPS3850-Q1

NOTE: Qualified Version Definitions:

- Automotive - Q100 devices qualified for high-reliability automotive applications targeting zero defects

TAPE AND REEL INFORMATION

REEL DIMENSIONS

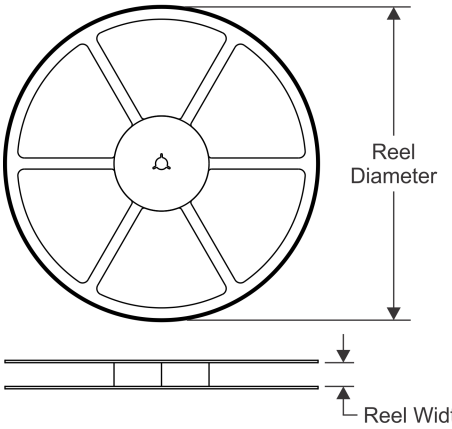

TAPE DIMENSIONS

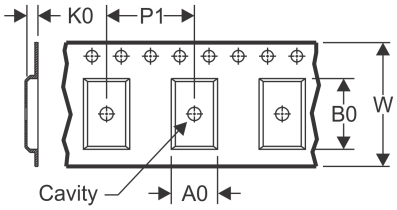

A0	Dimension designed to accommodate the component width
B0	Dimension designed to accommodate the component length
K0	Dimension designed to accommodate the component thickness
W	Overall width of the carrier tape
P1	Pitch between successive cavity centers

QUADRANT ASSIGNMENTS FOR PIN 1 ORIENTATION IN TAPE

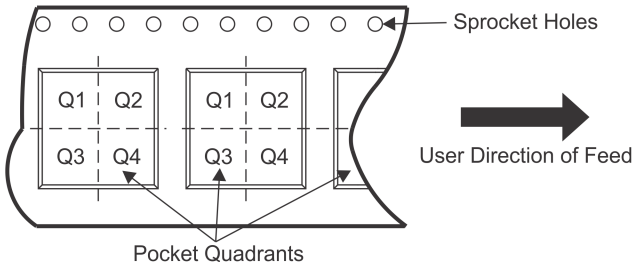

*All dimensions are nominal

Device	Package Type	Package Drawing	Pins	SPQ	Reel Diameter (mm)	Reel Width W1 (mm)	A0 (mm)	B0 (mm)	K0 (mm)	P1 (mm)	W (mm)	Pin1 Quadrant
TPS3850G12DRCR	VSON	DRC	10	3000	330.0	12.4	3.3	3.3	1.1	8.0	12.0	Q2
TPS3850G12DRCT	VSON	DRC	10	250	180.0	12.4	3.3	3.3	1.1	8.0	12.0	Q2
TPS3850G18DRCR	VSON	DRC	10	3000	330.0	12.4	3.3	3.3	1.1	8.0	12.0	Q2
TPS3850G18DRCT	VSON	DRC	10	250	180.0	12.4	3.3	3.3	1.1	8.0	12.0	Q2
TPS3850G30DRCR	VSON	DRC	10	3000	330.0	12.4	3.3	3.3	1.1	8.0	12.0	Q2
TPS3850G30DRCT	VSON	DRC	10	250	180.0	12.4	3.3	3.3	1.1	8.0	12.0	Q2
TPS3850G33DRCR	VSON	DRC	10	3000	330.0	12.4	3.3	3.3	1.1	8.0	12.0	Q2
TPS3850G33DRCT	VSON	DRC	10	250	180.0	12.4	3.3	3.3	1.1	8.0	12.0	Q2
TPS3850G50DRCR	VSON	DRC	10	3000	330.0	12.4	3.3	3.3	1.1	8.0	12.0	Q2
TPS3850G50DRCT	VSON	DRC	10	250	180.0	12.4	3.3	3.3	1.1	8.0	12.0	Q2
TPS3850H01DRCR	VSON	DRC	10	3000	330.0	12.4	3.3	3.3	1.1	8.0	12.0	Q2
TPS3850H01DRCT	VSON	DRC	10	250	180.0	12.4	3.3	3.3	1.1	8.0	12.0	Q2
TPS3850H12DRCR	VSON	DRC	10	3000	330.0	12.4	3.3	3.3	1.1	8.0	12.0	Q2
TPS3850H12DRCT	VSON	DRC	10	250	180.0	12.4	3.3	3.3	1.1	8.0	12.0	Q2
TPS3850H18DRCR	VSON	DRC	10	3000	330.0	12.4	3.3	3.3	1.1	8.0	12.0	Q2
TPS3850H18DRCT	VSON	DRC	10	250	180.0	12.4	3.3	3.3	1.1	8.0	12.0	Q2
TPS3850H30DRCR	VSON	DRC	10	3000	330.0	12.4	3.3	3.3	1.1	8.0	12.0	Q2
TPS3850H30DRCT	VSON	DRC	10	250	180.0	12.4	3.3	3.3	1.1	8.0	12.0	Q2

Device	Package Type	Package Drawing	Pins	SPQ	Reel Diameter (mm)	Reel Width W1 (mm)	A0 (mm)	B0 (mm)	K0 (mm)	P1 (mm)	W (mm)	Pin1 Quadrant
TPS3850H33DRCR	VSON	DRC	10	3000	330.0	12.4	3.3	3.3	1.1	8.0	12.0	Q2
TPS3850H33DRCT	VSON	DRC	10	250	180.0	12.4	3.3	3.3	1.1	8.0	12.0	Q2
TPS3850H50DRCR	VSON	DRC	10	3000	330.0	12.4	3.3	3.3	1.1	8.0	12.0	Q2
TPS3850H50DRCT	VSON	DRC	10	250	180.0	12.4	3.3	3.3	1.1	8.0	12.0	Q2

TAPE AND REEL BOX DIMENSIONS

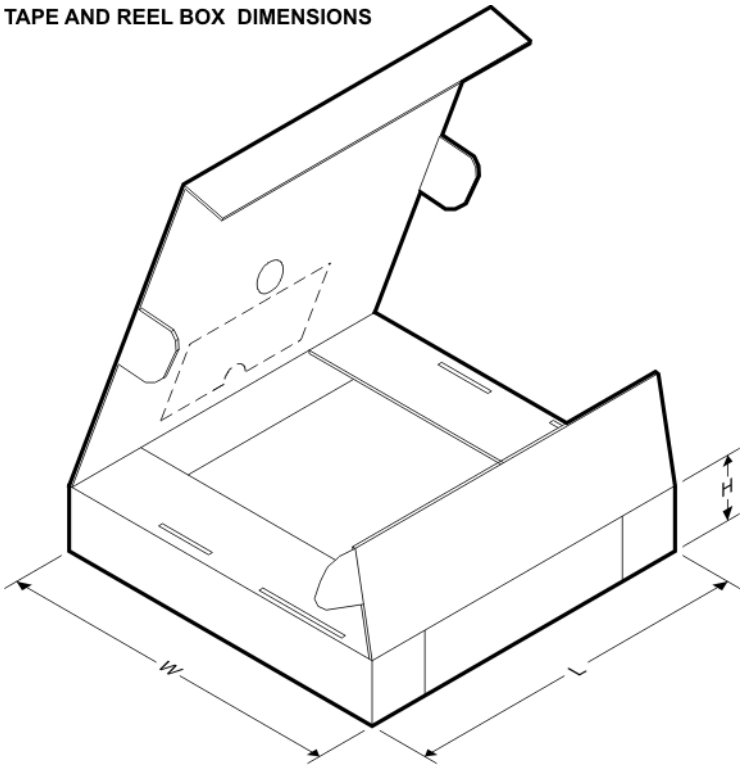

*All dimensions are nominal

Device	Package Type	Package Drawing	Pins	SPQ	Length (mm)	Width (mm)	Height (mm)
TPS3850G12DRCR	VSON	DRC	10	3000	367.0	367.0	35.0
TPS3850G12DRCT	VSON	DRC	10	250	210.0	185.0	35.0
TPS3850G18DRCR	VSON	DRC	10	3000	367.0	367.0	35.0
TPS3850G18DRCT	VSON	DRC	10	250	210.0	185.0	35.0
TPS3850G30DRCR	VSON	DRC	10	3000	367.0	367.0	35.0
TPS3850G30DRCT	VSON	DRC	10	250	210.0	185.0	35.0
TPS3850G33DRCR	VSON	DRC	10	3000	367.0	367.0	35.0
TPS3850G33DRCT	VSON	DRC	10	250	210.0	185.0	35.0
TPS3850G50DRCR	VSON	DRC	10	3000	367.0	367.0	35.0
TPS3850G50DRCT	VSON	DRC	10	250	210.0	185.0	35.0
TPS3850H01DRCR	VSON	DRC	10	3000	367.0	367.0	35.0
TPS3850H01DRCT	VSON	DRC	10	250	210.0	185.0	35.0
TPS3850H12DRCR	VSON	DRC	10	3000	367.0	367.0	35.0

Device	Package Type	Package Drawing	Pins	SPQ	Length (mm)	Width (mm)	Height (mm)
TPS3850H12DRCT	VSON	DRC	10	250	210.0	185.0	35.0
TPS3850H18DRCR	VSON	DRC	10	3000	367.0	367.0	35.0
TPS3850H18DRCT	VSON	DRC	10	250	210.0	185.0	35.0
TPS3850H30DRCR	VSON	DRC	10	3000	367.0	367.0	35.0
TPS3850H30DRCT	VSON	DRC	10	250	210.0	185.0	35.0
TPS3850H33DRCR	VSON	DRC	10	3000	367.0	367.0	35.0
TPS3850H33DRCT	VSON	DRC	10	250	210.0	185.0	35.0
TPS3850H50DRCR	VSON	DRC	10	3000	367.0	367.0	35.0
TPS3850H50DRCT	VSON	DRC	10	250	210.0	185.0	35.0

GENERIC PACKAGE VIEW

DRC 10

VSON - 1 mm max height

3 x 3, 0.5 mm pitch

PLASTIC SMALL OUTLINE - NO LEAD

This image is a representation of the package family, actual package may vary.
Refer to the product data sheet for package details.

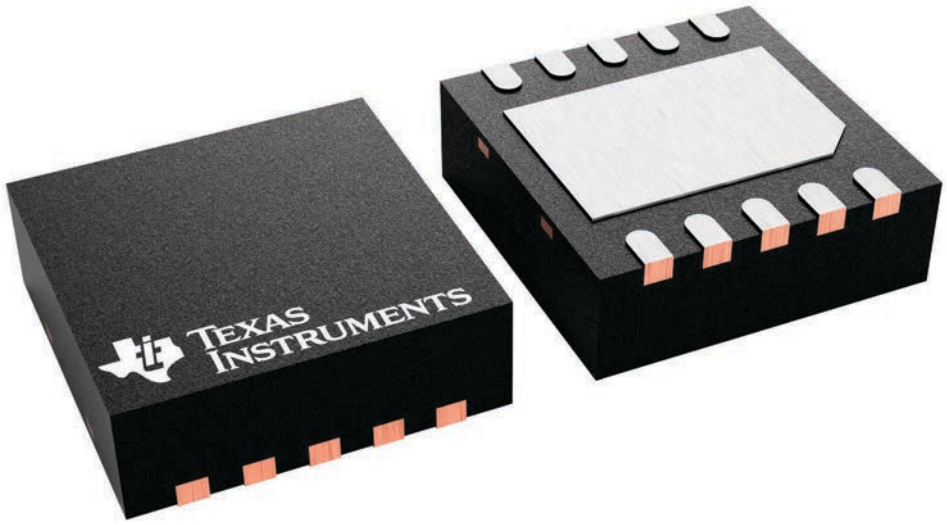

4226193/A

DRC0010J

PACKAGE OUTLINE

VSON - 1 mm max height

PLASTIC SMALL OUTLINE - NO LEAD

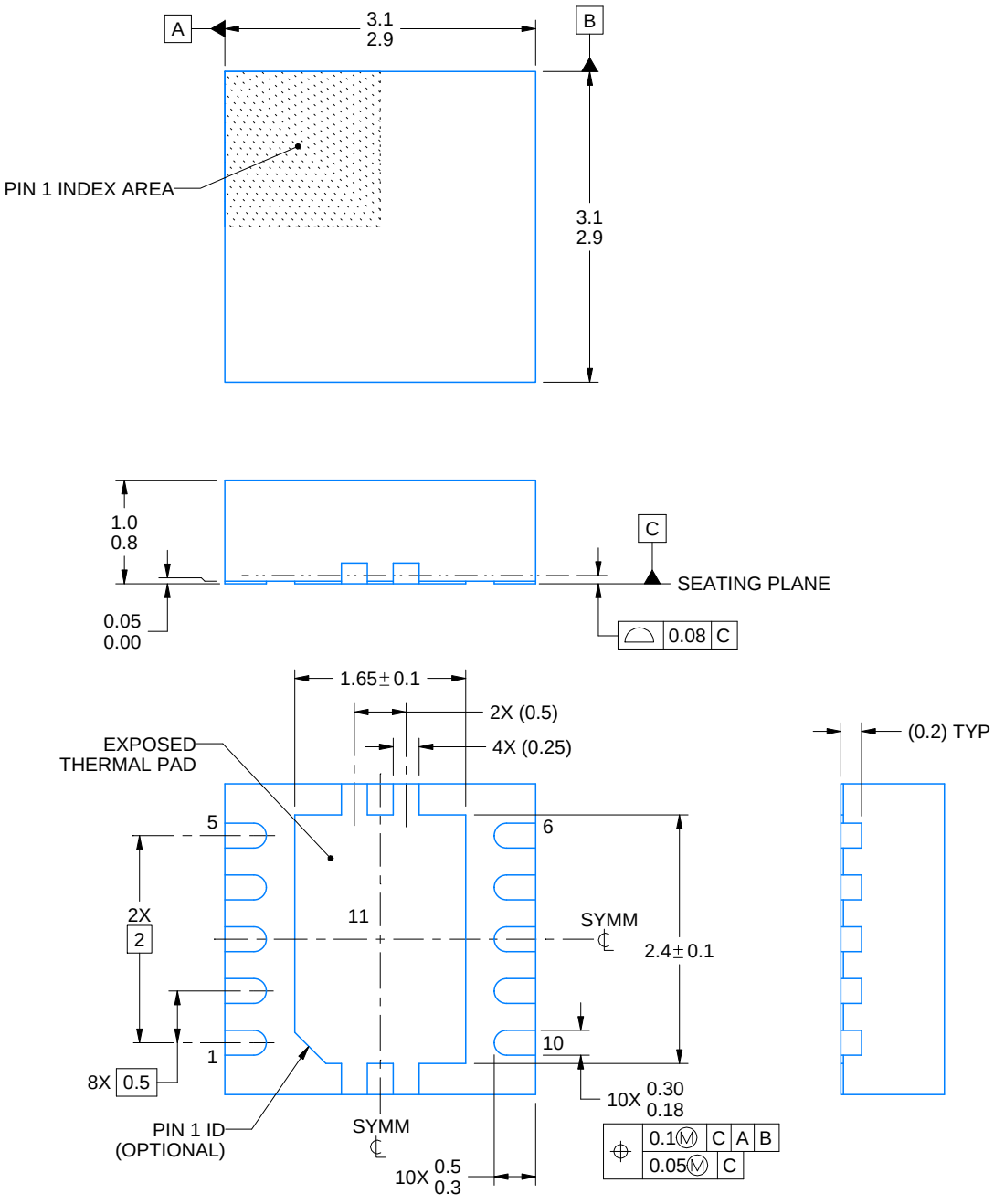

NOTES:

1. All linear dimensions are in millimeters. Any dimensions in parenthesis are for reference only. Dimensioning and tolerancing per ASME Y14.5M.
2. This drawing is subject to change without notice.
3. The package thermal pad must be soldered to the printed circuit board for optimal thermal and mechanical performance.

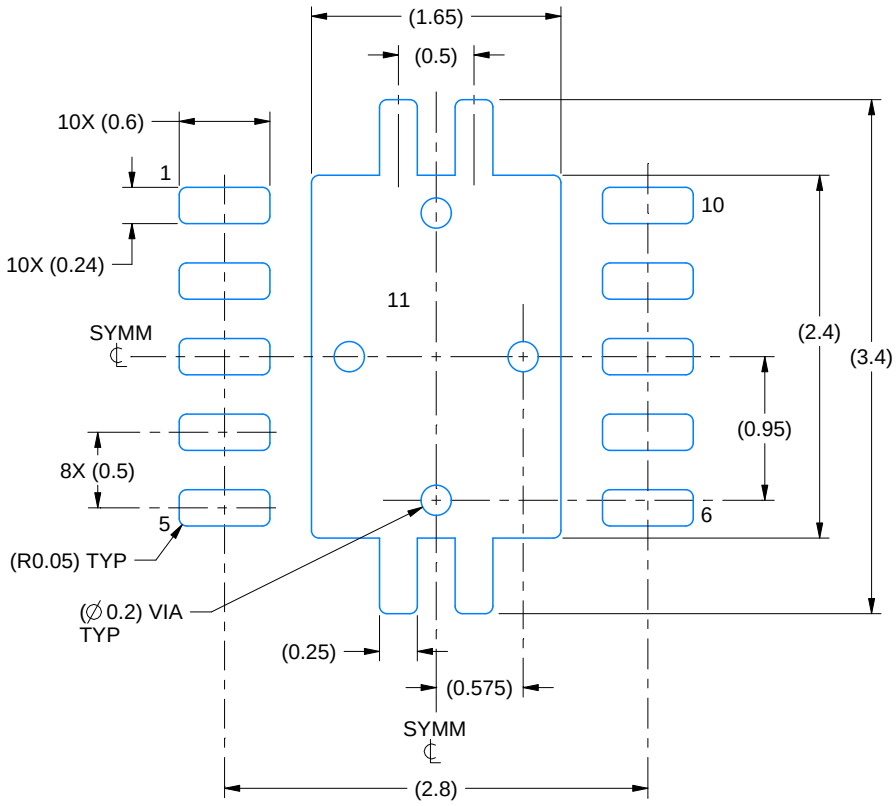

LAND PATTERN EXAMPLE
EXPOSED METAL SHOWN
SCALE:20X

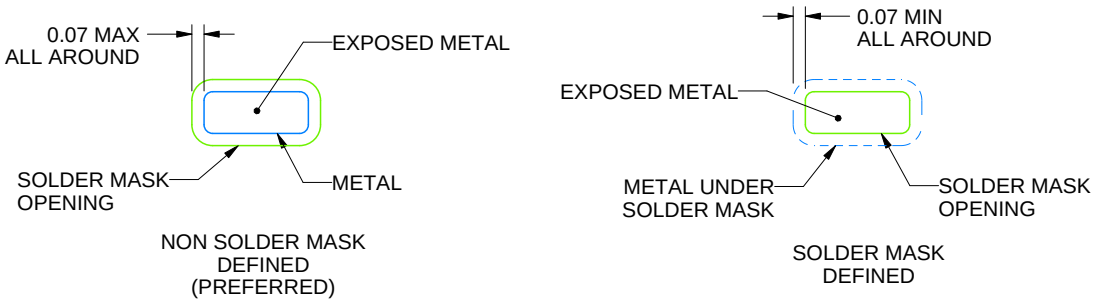

SOLDER MASK DETAILS

4218878/B 07/2018

NOTES: (continued)

4. This package is designed to be soldered to a thermal pad on the board. For more information, see Texas Instruments literature number SLUA271 (www.ti.com/lit/slua271).
5. Vias are optional depending on application, refer to device data sheet. If any vias are implemented, refer to their locations shown on this view. It is recommended that vias under paste be filled, plugged or tented.

EXAMPLE STENCIL DESIGN

DRC0010J

VSON - 1 mm max height

PLASTIC SMALL OUTLINE - NO LEAD

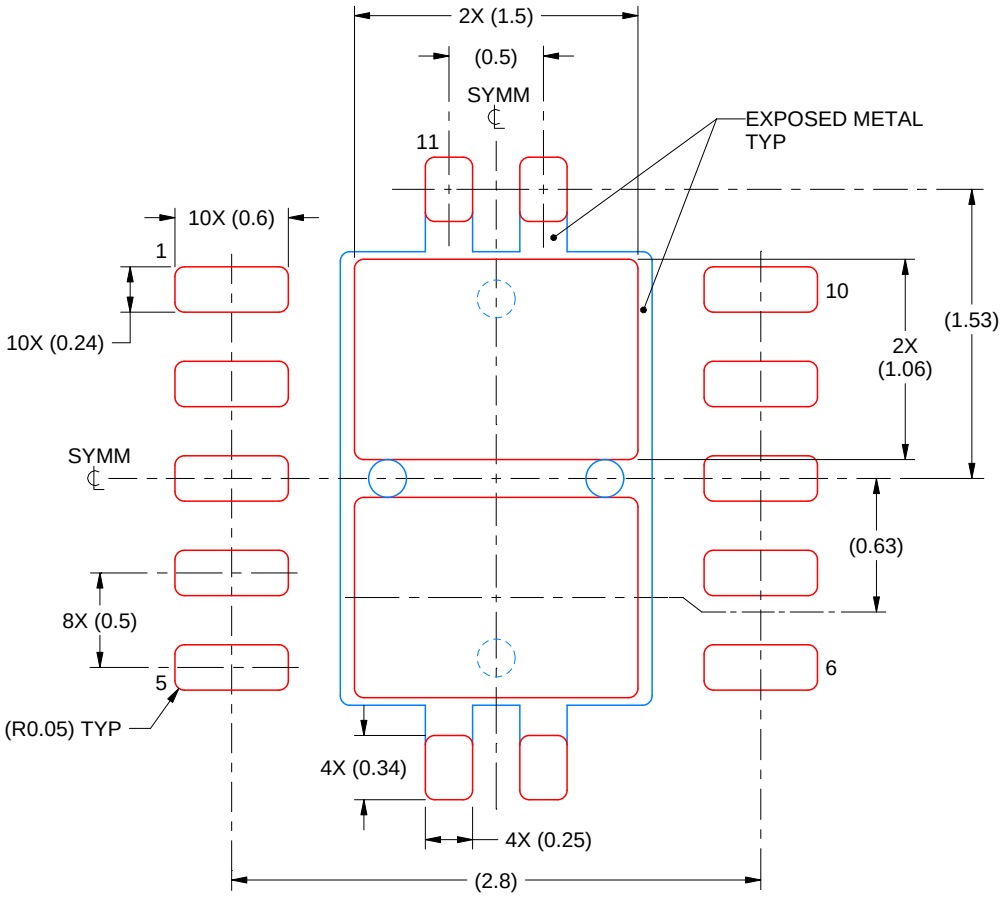

SOLDER PASTE EXAMPLE
BASED ON 0.125 mm THICK STENCIL

EXPOSED PAD 11:
80% PRINTED SOLDER COVERAGE BY AREA
SCALE:25X

4218878/B 07/2018

NOTES: (continued)

6. Laser cutting apertures with trapezoidal walls and rounded corners may offer better paste release. IPC-7525 may have alternate design recommendations.

重要声明和免责声明

TI“按原样”提供技术和可靠性数据（包括数据表）、设计资源（包括参考设计）、应用或其他设计建议、网络工具、安全信息和其他资源，不保证没有瑕疵且不做出任何明示或暗示的担保，包括但不限于对适销性、某特定用途方面的适用性或不侵犯任何第三方知识产权的暗示担保。

这些资源可供使用 TI 产品进行设计的熟练开发人员使用。您将自行承担以下全部责任：(1) 针对您的应用选择合适的 TI 产品，(2) 设计、验证并测试您的应用，(3) 确保您的应用满足相应标准以及任何其他功能安全、信息安全、监管或其他要求。

这些资源如有变更，恕不另行通知。TI 授权您仅可将这些资源用于研发本资源所述的 TI 产品的应用。严禁对这些资源进行其他复制或展示。您无权使用任何其他 TI 知识产权或任何第三方知识产权。您应全额赔偿因在这些资源的使用中对 TI 及其代表造成的任何索赔、损害、成本、损失和债务，TI 对此概不负责。

TI 提供的产品受 TI 的销售条款或 ti.com 上其他适用条款/TI 产品随附的其他适用条款的约束。TI 提供这些资源并不会扩展或以其他方式更改 TI 针对 TI 产品发布的适用的担保或担保免责声明。

TI 反对并拒绝您可能提出的任何其他或不同的条款。

邮寄地址：Texas Instruments, Post Office Box 655303, Dallas, Texas 75265
Copyright © 2021，德州仪器 (TI) 公司