具有 Eco-mode™控制机制的 TPS54260-EP 3.5V 至 60V 降压转换器

1 特性

- 3.5V 至 60V 输入电压范围
- 200mΩ 高侧金属氧化物半导体场效应晶体 (MOSFET)
- 可在轻负载条件下使用脉冲跳跃 Eco-mode™控制机制实现高效率
- 138μA 静态工作电流
- 1.3μA 关断电流
- 100kHz 至 2.5MHz 开关频率
- 同步至外部时钟
- 可调缓启动和定序
- 欠压 (UV) 和过压 (OV) 电源正常输出
- 可调 UVLO 电压和滞后
- 0.8V 内部电压基准
- 10 引脚 HVSSOP 封装和 10 引脚 3mm × 3mm VSON 封装
- 由 WEBENCH®软件工具支持
- 支持国防、航天和医疗 应用
  - 受控基线
  - 同一组装和测试场所
  - 同一制造场所
  - 支持军用（-55°C 至 125°C）温度范围
  - 延长的产品生命周期
  - 延长的产品变更通知
  - 产品可追溯性

2 应用范围

- 12V 和 24V 汽车与工业系统
- 信息娱乐系统、仪表盘和高级驾驶员辅助系统 (ADAS) 应用

3 说明

TPS54260-EP 器件是一款集成了高侧 MOSFET 的 60V、2.5A 降压稳压器。它具有电流模式控制功能，可轻松实现外部补偿并灵活选择组件。低纹波脉冲跳跃模式可将无负载的稳压输出电源电流减小至 138μA。它使用了使能引脚，在该引脚为低电平时，关断电源电流
将降至 1.3μA。

欠压锁定在内部设定为 2.5V，但可采用使能引脚将之提高。输出电压启动斜坡由慢启动引脚控制，我们还可以通过配置该引脚来控制排序和跟踪。开漏电源状态良好信号表示输出处于标称电压的 94% 至 107% 之内。

宽开关频率范围允许对效率及外部组件尺寸进行优化。频率折返和热关断功能在过载情况下保护部件。

TPS54260-EP 采用 10 引脚热增强型 HVSSOP 封装和 10 引脚 3mm × 3mm VSON 封装。

器件信息(1)

器件型号	封装	封装尺寸（标称值）
TPS54260-EP	HVSSOP (10)	3.00mm × 4.90mm
	VSON (10)	3.00mm × 3.00mm

(1) 要了解所有可用封装，请参阅数据表末尾的可订购产品附录。

简化电路原理图

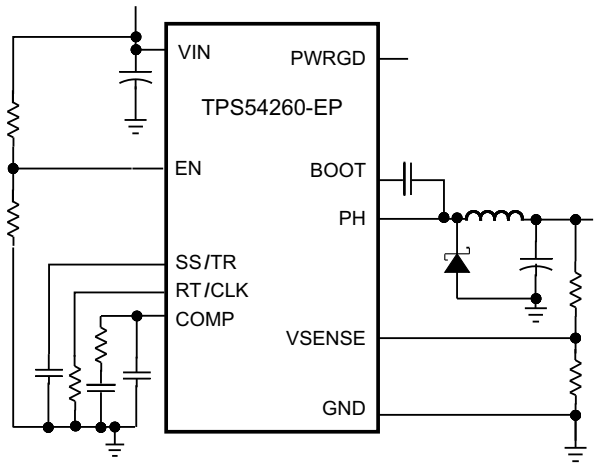

Copyright © 2016, Texas Instruments Incorporated

效率与负载电流间的关系

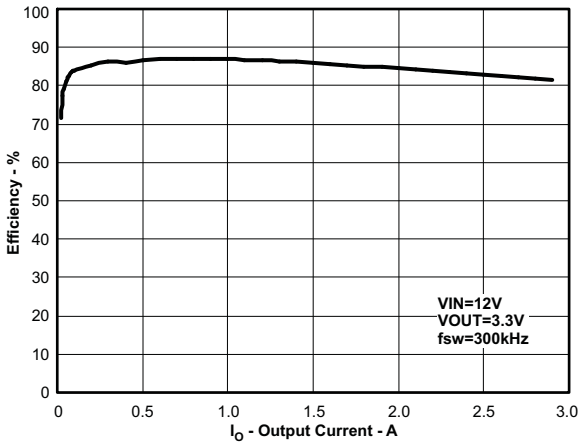

An IMPORTANT NOTICE at the end of this data sheet addresses availability, warranty, changes, use in safety-critical applications, intellectual property matters and other important disclaimers. PRODUCTION DATA.

目录

1 特性 ... 1
2 应用范围 ... 1
3 说明 ... 1
4 修订历史记录 ... 2
5 **Pin Configuration and Functions** ... 3
6 **Specifications** ... 4
6.1 Absolute Maximum Ratings ... 4
6.2 ESD Ratings ... 4
6.3 Recommended Operating Conditions ... 4
6.4 Thermal Information ... 5
6.5 Electrical Characteristics ... 5
6.6 Typical Characteristics ... 7
7 **Detailed Description** ... 11
7.1 Overview ... 11
7.2 Functional Block Diagram ... 12
7.3 Feature Description ... 12
7.4 Device Functional Modes ... 25
8 **Application and Implementation** ... 30
8.1 Application Information ... 30
8.2 Typical Application ... 30
9 **Power Supply Recommendations** ... 40
10 **Layout** ... 40
10.1 Layout Guidelines ... 40
10.2 Layout Example ... 41
11 器件和文档支持 ... 42
11.1 接收文档更新通知 ... 42
11.2 社区资源 ... 42
11.3 商标 ... 42
11.4 静电放电警告 ... 42
11.5 Glossary ... 42
12 机械、封装和可订购信息 ... 43

4 修订历史记录

Changes from Original (December 2016) to Revision A **Page**

- Changed T_J MAX from 125°C : to 150°C in the *Recommended Operating Conditions* table ... 4

Copyright © 2016–2017, Texas Instruments Incorporated

5 Pin Configuration and Functions

DGQ Package
10-Pin HVSSOP
Top View

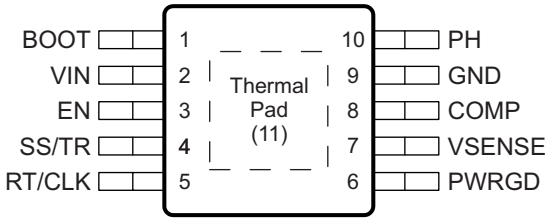

DRC Package
10-Pin VSON
Top View

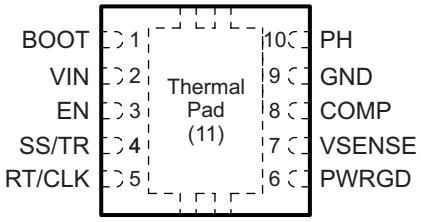

Pin Functions

PIN		I/O	DESCRIPTION
NAME	NO.		
BOOT	1	O	A bootstrap capacitor is required between BOOT and PH. If the voltage on this capacitor is below the minimum required by the output device, the output is forced to switch off until the capacitor is refreshed.
COMP	8	O	Error amplifier output, and input to the output switch current comparator. Connect frequency compensation components to this pin.
EN	3	I	Enable pin, internal pull-up current source. Pull below 1.2 V to disable. Float to enable. Adjust the input undervoltage lockout with two resistors.
GND	9	—	Ground.
PH	10	I	The source of the internal high-side power MOSFET.
PowerPAD	—	—	GND pin must be electrically connected to the exposed pad on the printed circuit board for proper operation.
PWRGD	6	O	An open-drain output, asserts low if output voltage is low due to thermal shutdown, dropout, over-voltage or EN shutdown.
RT/CLK	5	I	Resistor timing and external clock. An internal amplifier holds this pin at a fixed voltage when using an external resistor to ground to set the switching frequency. If the pin is pulled above the PLL upper threshold, a mode change occurs and the pin becomes a synchronization input. The internal amplifier is disabled and the pin is a high impedance clock input to the internal PLL. If clocking edges stop, the internal amplifier is re-enabled and the mode returns to a resistor set function.
SS/TR	4	I	Slow-start and Tracking. An external capacitor connected to this pin sets the output rise time. Because the voltage on this pin overrides the internal reference, it can be used for tracking and sequencing.
VIN	2	I	Input supply voltage, 3.5 V to 60 V.
VSENSE	7	I	Inverting node of the transconductance (gm) error amplifier.

Copyright © 2016–2017, Texas Instruments Incorporated

6 Specifications

6.1 Absolute Maximum Ratings

over operating temperature range (unless otherwise noted).[1]

			MIN	MAX	UNIT
Input voltage	VIN		–0.3	65	V
	EN[2]		–0.3	5	
	VSENSE		–0.3	3	
	COMP		–0.3	3	
	PWRGD		–0.3	6	
	SS/TR		–0.3	3	
	RT/CLK		–0.3	3.6	
Output voltage	BOOT-PH		–0.3	8	V
	PH		–0.6	65	
		200 ns	–1	65	
		30 ns	–2	65	
		Maximum dc voltage, T_J= –40°C		–0.85	
Voltage difference	PAD to GND			±200	mV
Source current	EN			100	µA
	BOOT			100	mA
	VSENSE			10	µA
	PH		Current limit		
	RT/CLK			100	µA
Sink current	VIN		Current limit		
	COMP			100	µA
	PWRGD			10	mA
	SS/TR			200	µA
Operating junction temperature			–55	150	°C
Storage temperature, T_{stg}			–65	150	°C

(1) Stresses beyond those listed under *Absolute Maximum Ratings* may cause permanent damage to the device. These are stress ratings only, which do not imply functional operation of the device at these or any other conditions beyond those indicated under *Recommended Operating Conditions*. Exposure to absolute-maximum-rated conditions for extended periods may affect device reliability.
(2) See *Enable and Adjusting Undervoltage Lockout (UVLO)* for details.

6.2 ESD Ratings

		VALUE	UNIT
$V_{(ESD)}$ Electrostatic discharge	Human-body model (HBM), per ANSI/ESDA/JEDEC JS-001[1]	±2000	V
	Charged-device model (CDM), per JEDEC specification JESD22-C101[2]	±500	

(1) JEDEC document JEP155 states that 500-V HBM allows safe manufacturing with a standard ESD control process.
(2) JEDEC document JEP157 states that 250-V CDM allows safe manufacturing with a standard ESD control process.

6.3 Recommended Operating Conditions

over operating junction temperature range (unless otherwise noted)

	MIN	NOM	MAX	UNIT
T_J Operating junction temperature	–55		150	°C

Copyright © 2016–2017, Texas Instruments Incorporated

6.4 Thermal Information

THERMAL METRIC[1][2]			TPS54260-EP		UNIT
			DRC (VSON)	DGQ (HVSSOP)	
			10 PINS	10 PINS	
$R_{\theta JA}$	Junction-to-ambient thermal resistance	Standard board	40	62.5	°C/W
		Custom board[3]	—	57	
$R_{\theta JC(top)}$	Junction-to-case (top) thermal resistance		65	83	°C/W
$R_{\theta JB}$	Junction-to-board thermal resistance		8	28	°C/W
ψ_{JT}	Junction-to-top characterization parameter		0.6	1.7	°C/W
ψ_{JB}	Junction-to-board characterization parameter		7.5	20.1	°C/W
$R_{\theta JC(bot)}$	Junction-to-case (bottom) thermal resistance		7.8	21	°C/W

(1) For more information about traditional and new thermal metrics, see the *Semiconductor and IC Package Thermal Metrics* application report.
(2) Power rating at a specific ambient temperature T_A should be determined with a junction temperature of 150°C. This is the point where distortion starts to substantially increase. See power dissipation estimate in application section of this data sheet for more information.
(3) Test boards conditions:
(a) 3 in × 3 in, 2 layers, thickness: 0.062 in.
(b) 2-oz copper traces located on the top of the PCB.
(c) 2-oz copper ground plane, bottom layer.
(d) 6-thermal vias (13 mil) located under the device package.

6.5 Electrical Characteristics

T_J = –55 to 150°C, VIN = 3.5 to 60 V (unless otherwise noted)

PARAMETER		TEST CONDITIONS	MIN	TYP	MAX	UNIT
SUPPLY VOLTAGE (VIN PIN)						
	Operating input voltage		3.5		60	V
	Internal undervoltage lockout threshold	No voltage hysteresis, rising and falling		2.5		V
	Shutdown supply current	EN = 0 V, 3.5 V ≤ VIN ≤ 60 V		1.3	10	µA
	Operating: nonswitching supply current	VSENSE = 0.83 V, VIN = 12 V		138	200	µA
ENABLE AND UVLO (EN PIN)						
	Enable threshold voltage	No voltage hysteresis, rising and falling, 25°C	1.14	1.25	1.36	V
	Input current	Enable threshold +50 mV		–3.8		µA
		Enable threshold –50 mV		–0.9		
	Hysteresis current			–2.9		µA
VOLTAGE REFERENCE						
	Voltage reference	T_J = 25°C	0.792	0.8	0.808	V
			0.78	0.8	0.82	
HIGH-SIDE MOSFET						
	on resistance	VIN = 3.5 V, BOOT-PH = 3 V		300		mΩ
		VIN = 12 V, BOOT-PH = 6 V		200	410	
ERROR AMPLIFIER						
	Input current			50		nA
	Error amplifier transconductance (g_M)	–2 µA < I_{COMP} < 2 µA, V_{COMP} = 1 V		310		µS
	Error amplifier transconductance (g_M) during slow-start	–2 µA < I_{COMP} < 2 µA, V_{COMP} = 1 V, V_{VSENSE} = 0.4 V		70		µS
	Error amplifier dc gain	V_{VSENSE} = 0.8 V		10,000		V/V
	Error amplifier bandwidth			2700		kHz
	Error amplifier source/sink	$V_{(COMP)}$ = 1 V, 100 mV overdrive		±27		µA
	COMP to switch current transconductance			10.5		A/V

Copyright © 2016–2017, Texas Instruments Incorporated

Electrical Characteristics (continued)

T_J = –55 to 150°C, VIN = 3.5 to 60 V (unless otherwise noted)

PARAMETER		TEST CONDITIONS	MIN	TYP	MAX	UNIT
CURRENT LIMIT						
	Current limit threshold	VIN = 12 V	3.5	6.1		A
THERMAL SHUTDOWN						
	Thermal shutdown			182		°C
TIMING RESISTOR AND EXTERNAL CLOCK (RT/CLK PIN)						
	Switching frequency range using RT mode		100		2500	kHz
f_{SW}	Switching frequency	R_T = 200 kΩ	450	581	720	kHz
	Switching frequency range using CLK mode		300		2200	kHz
	Minimum CLK input pulse width			40		ns
	RT/CLK high threshold			1.9	2.2	V
	RT/CLK low threshold		0.5	0.7		V
	RT/CLK falling edge to PH rising edge delay	Measured at 500 kHz with RT resistor in series		60		ns
	PLL lock in time	Measured at 500 kHz		100		µs
SLOW-START AND TRACKING (SS/TR)						
	Charge current	$V_{SS/TR}$ = 0.4 V		2		µA
	SS/TR-to-VSENSE matching	$V_{SS/TR}$ = 0.4 V		45		mV
	SS/TR-to-reference crossover	98% nominal		1.15		V
	SS/TR discharge current (overload)	VSENSE = 0 V, V(SS/TR) = 0.4 V		382		µA
	SS/TR discharge voltage	VSENSE = 0 V		54		mV
POWER GOOD (PWRGD PIN)						
V_{VSENSE}	VSENSE threshold	VSENSE falling		92%		
		VSENSE rising		94%		
		VSENSE rising		109%		
		VSENSE falling		107%		
	Hysteresis	VSENSE falling		2%		
	Output high leakage	VSENSE = VREF, V(PWRGD) = 5.5 V, 25°C		10		nA
	On resistance	I(PWRGD) = 3 mA, VSENSE < 0.79 V		50		Ω
	Minimum VIN for defined output	V(PWRGD) < 0.5 V, II(PWRGD) = 100 µA		0.95	1.9	V

Copyright © 2016–2017, Texas Instruments Incorporated

6.6 Typical Characteristics

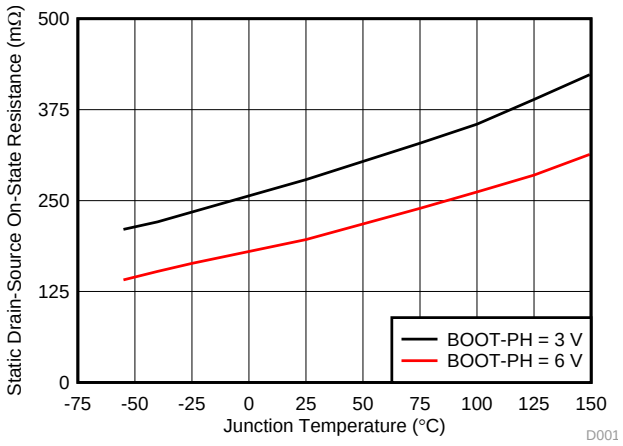

Figure 1. On Resistance vs Junction Temperature

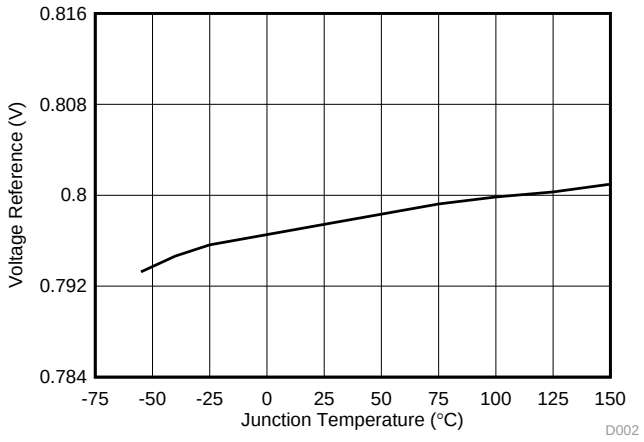

Figure 2. Voltage Reference vs Junction Temperature

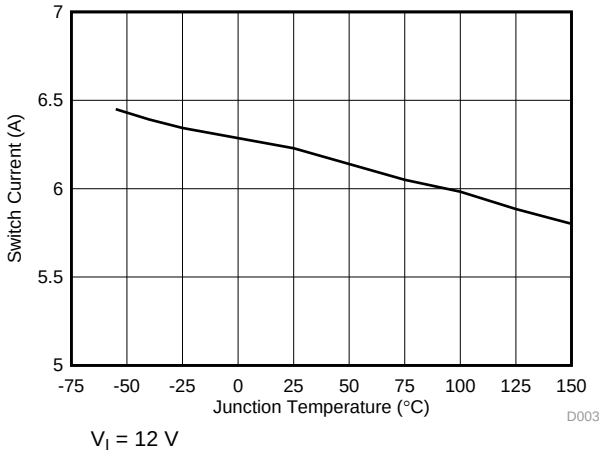

Figure 3. Switch Current Limit vs Junction Temperature

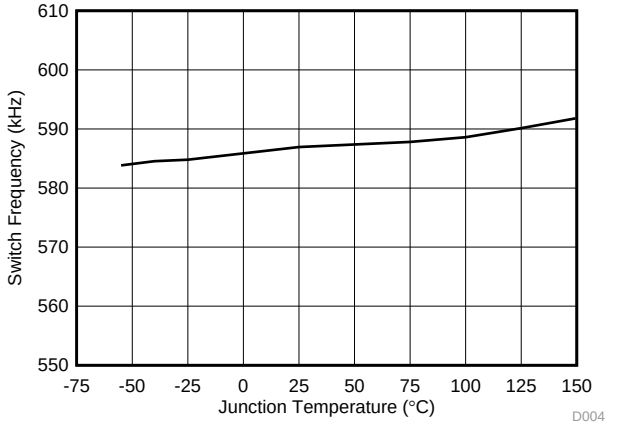

Figure 4. Switching Frequency vs Junction Temperature

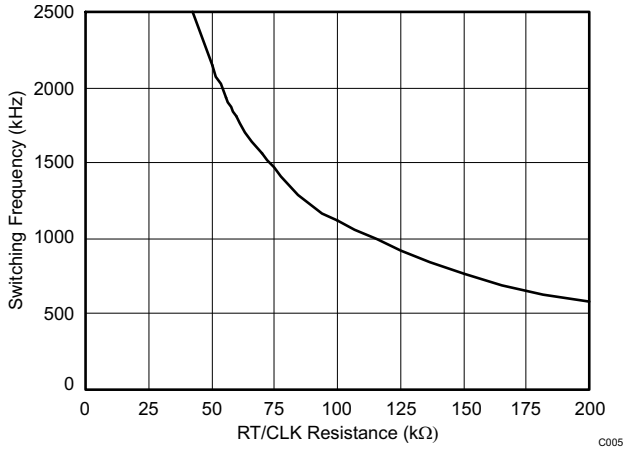

Figure 5. Switching Frequency vs RT/CLK Resistance High Frequency Range

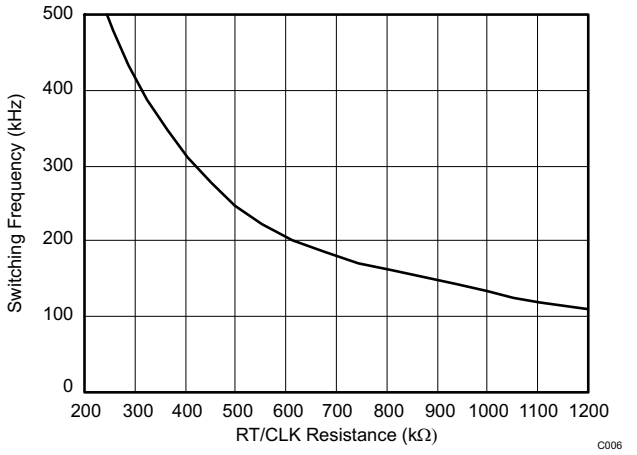

Figure 6. Switching Frequency vs RT/CLK Resistance Low Frequency Range

Copyright © 2016–2017, Texas Instruments Incorporated

Typical Characteristics (continued)

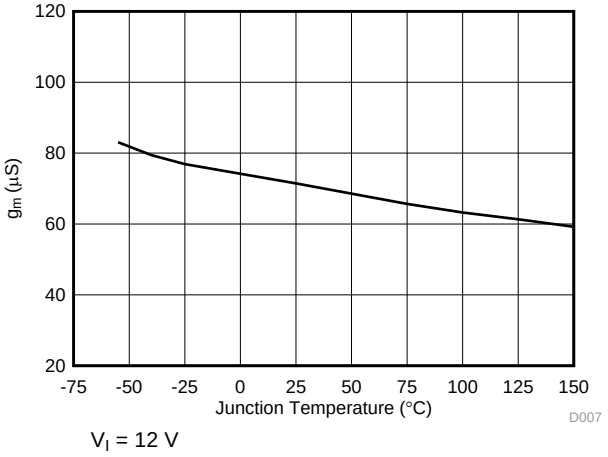

Figure 7. EA Transconductance During Slow-Start vs Junction Temperature

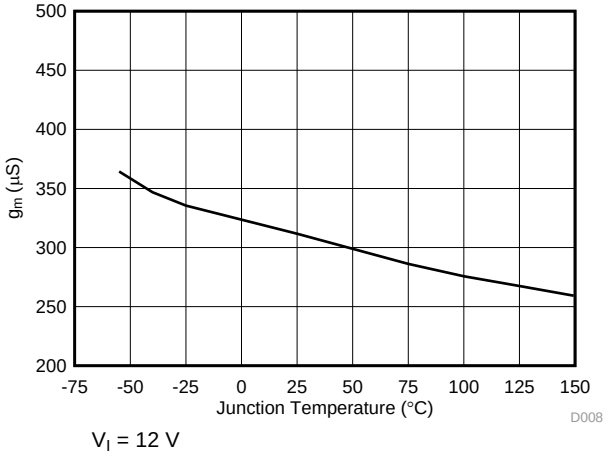

Figure 8. EA Transconductance vs Junction Temperature

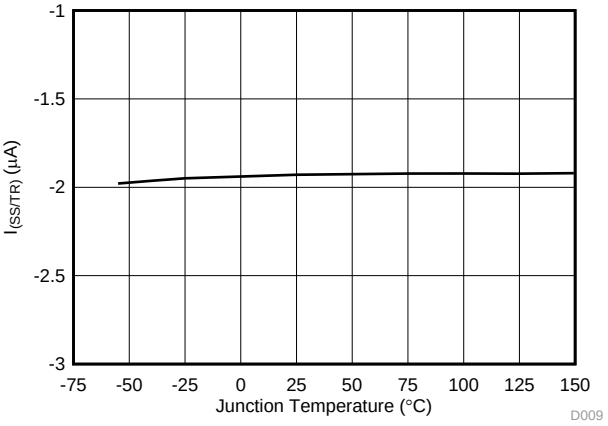

Figure 9. SS/TR Charge Current vs Junction Temperature

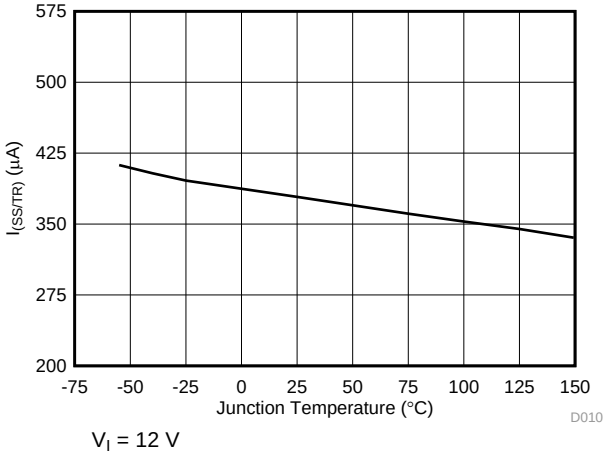

Figure 10. SS/TR Discharge Current vs Junction Temperature

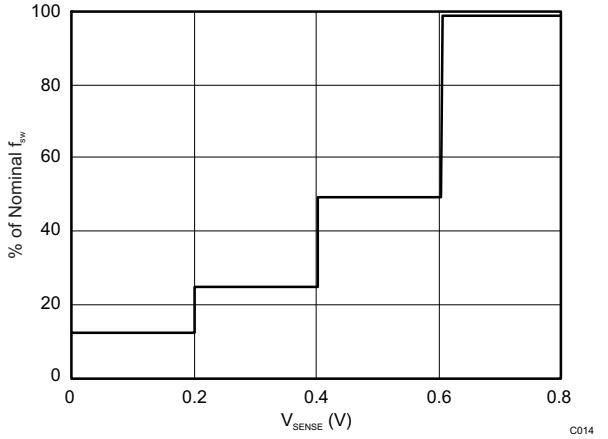

Figure 11. Switching Frequency vs V_{SENSE}

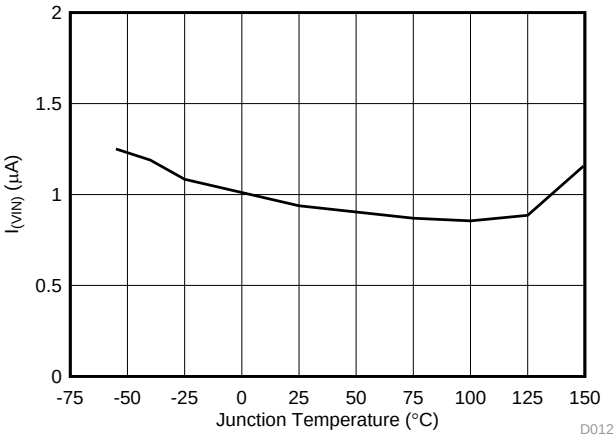

Figure 12. Shutdown Supply Current vs Junction Temperature

Copyright © 2016–2017, Texas Instruments Incorporated

Typical Characteristics (continued)

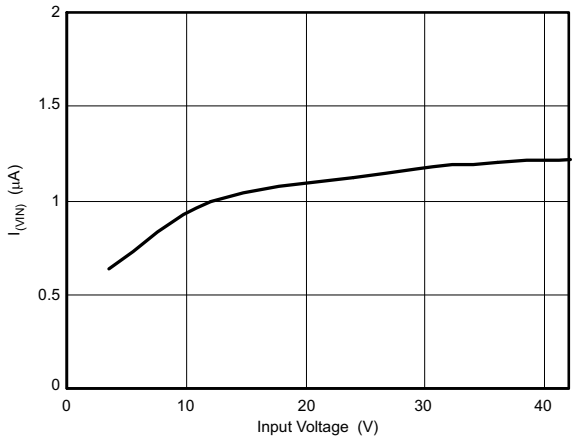

T_J = 25°C

Figure 13. Shutdown Supply Current vs Input Voltage (V_{IN})

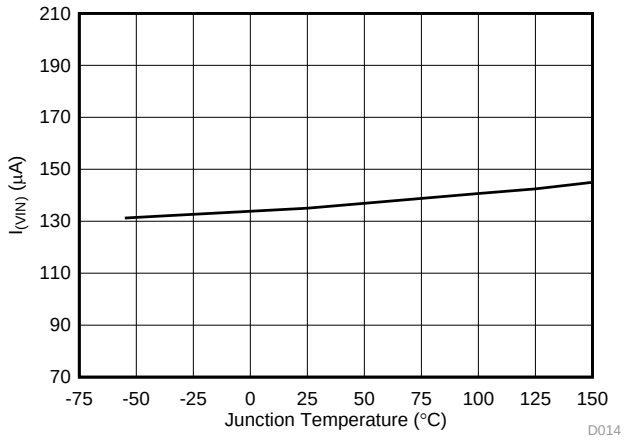

V_I = 12 V $V_{I(VSENSE)}$ = 0.83 V

Figure 14. VIN Supply Current vs Junction Temperature

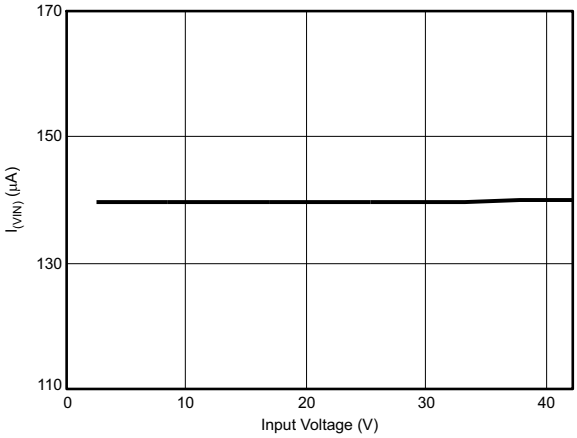

T_J = 25°C $V_{I(VSENSE)}$ = 0.83 V

Figure 15. VIN Supply Current vs Input Voltage

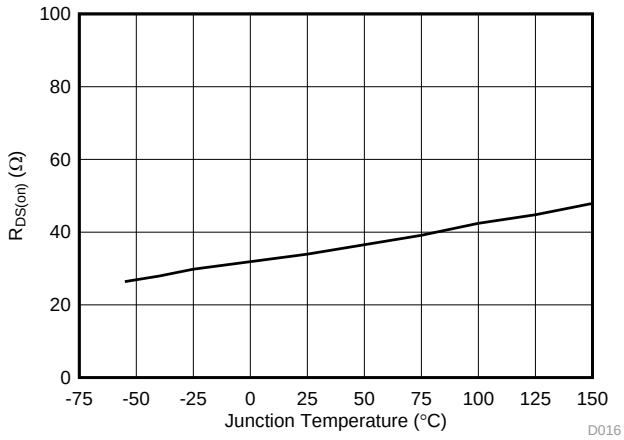

Figure 16. PWRGD On Resistance vs Junction Temperature

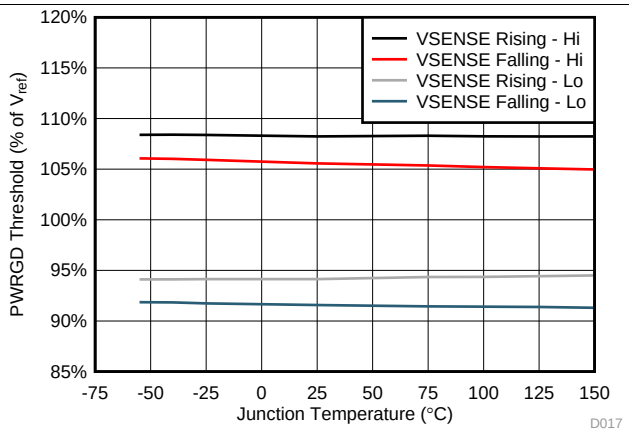

Figure 17. PWRGD Threshold vs Junction Temperature

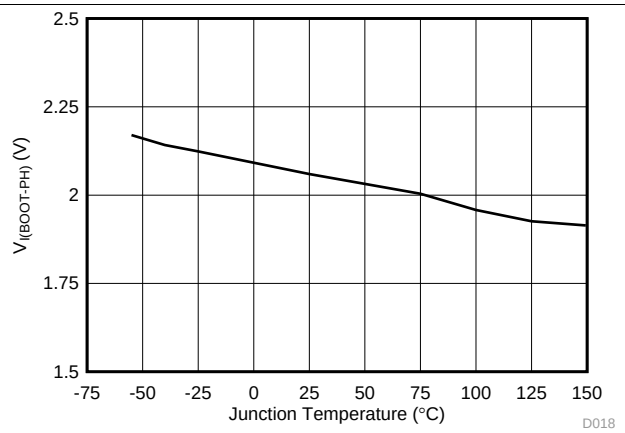

Figure 18. Boot-PH UVLO vs Junction Temperature

Copyright © 2016–2017, Texas Instruments Incorporated

Typical Characteristics (continued)

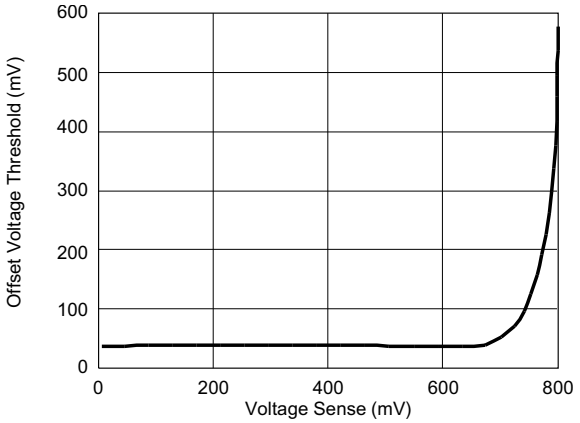

T_J = 25°C V_I = 12 V

Figure 19. SS/TR to V_{SENSE} Offset vs V_{SENSE}

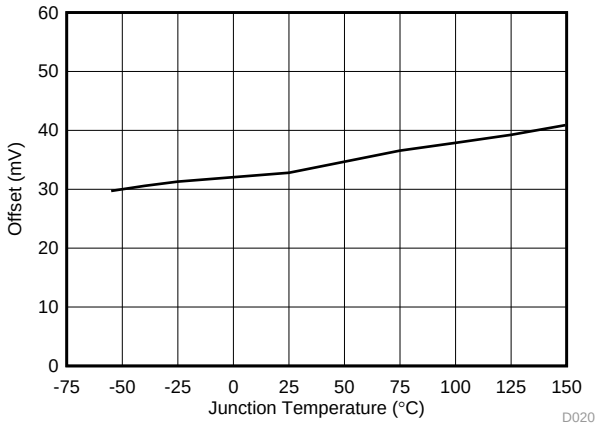

V_I = 12 V $V_{(SS/TR)}$ = 0.4 V

Figure 20. SS/TR to V_{SENSE} Offset vs Temperature

Copyright © 2016–2017, Texas Instruments Incorporated

7 Detailed Description

7.1 Overview

The TPS54260-EP device is a 60-V, 2.5-A, step-down (buck) regulator with an integrated high-side n-channel MOSFET. To improve performance during line and load transients the device implements a constant frequency, current mode control which reduces output capacitance and simplifies external frequency compensation design. The wide switching frequency of 100 kHz to 2500 kHz allows for efficiency and size optimization when selecting the output filter components. The switching frequency is adjusted using a resistor to ground on the RT/CLK pin. The device has an internal phase lock loop (PLL) on the RT/CLK pin that is used to synchronize the power switch turn on to a falling edge of an external system clock.

The TPS54260-EP has a default start up voltage of approximately 2.5 V. The EN pin has an internal pull-up current source that can be used to adjust the input voltage under voltage lockout (UVLO) threshold with two external resistors. In addition, the pull up current provides a default condition. When the EN pin is floating the device operates. The operating current is 138 μA when not switching and under no load. When the device is disabled, the supply current is 1.3 μA.

The integrated 200-mΩ high-side MOSFET allows for high efficiency power supply designs capable of delivering 2.5 A of continuous current to a load. The TPS54260-EP reduces the external component count by integrating the boot recharge diode. The bias voltage for the integrated high-side MOSFET is supplied by a capacitor on the BOOT to PH pin. The boot capacitor voltage is monitored by an UVLO circuit and turns the high-side MOSFET off when the boot voltage falls below a preset threshold. The TPS54260-EP operates at high duty cycles because of the boot UVLO. The output voltage can be stepped down to as low as the 0.8-V reference.

The TPS54260-EP has a power good comparator (PWRGD) which asserts when the regulated output voltage is less than 92% or greater than 109% of the nominal output voltage. The PWRGD pin is an open drain output which deasserts when the VSENSE pin voltage is between 94% and 107% of the nominal output voltage allowing the pin to transition high when a pull-up resistor is used.

The TPS54260-EP minimizes excessive output overvoltage (OV) transients by taking advantage of the OV power good comparator. When the OV comparator is activated, the high-side MOSFET is turned off and masked from turning on until the output voltage is lower than 107%.

The SS/TR (slow-start/tracking) pin is used to minimize inrush currents or provide power supply sequencing during power up. A small value capacitor should be coupled to the pin to adjust the slow-start time. A resistor divider can be coupled to the pin for critical power supply sequencing requirements. The SS/TR pin is discharged before the output powers up. This discharging ensures a repeatable restart after an over-temperature fault, UVLO fault or a disabled condition.

The TPS54260-EP, also, discharges the slow-start capacitor during overload conditions with an overload recovery circuit. The overload recovery circuit slow-starts the output from the fault voltage to the nominal regulation voltage once a fault condition is removed. A frequency foldback circuit reduces the switching frequency during startup and overcurrent fault conditions to help control the inductor current.

Copyright © 2016–2017, Texas Instruments Incorporated

7.2 Functional Block Diagram

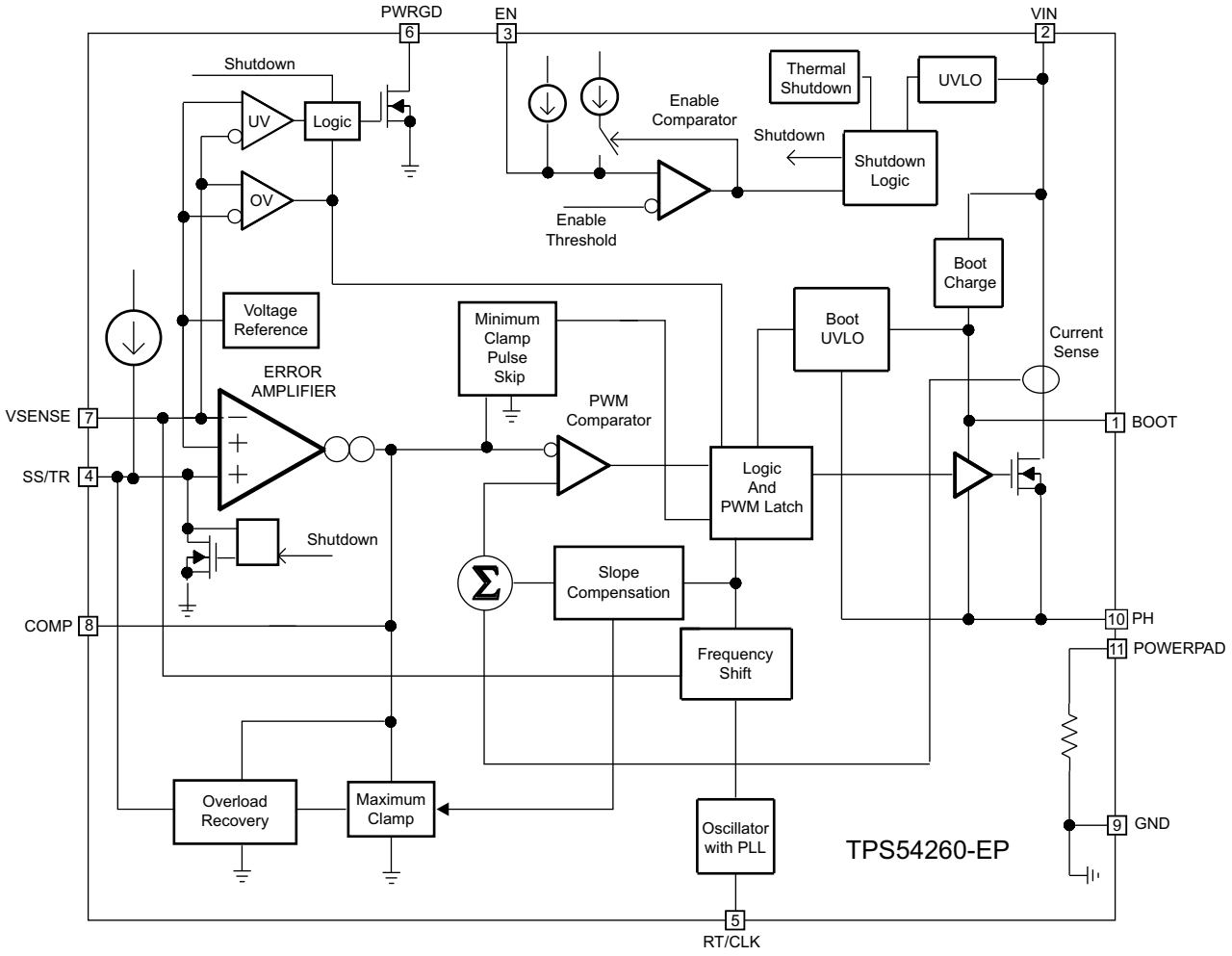

Copyright © 2016, Texas Instruments Incorporated

7.3 Feature Description

7.3.1 Fixed Frequency PWM Control

The TPS54260-EP uses an adjustable fixed frequency, peak current mode control. The output voltage is compared through external resistors on the VSENSE pin to an internal voltage reference by an error amplifier which drives the COMP pin. An internal oscillator initiates the turn on of the high-side power switch. The error amplifier output is compared to the high-side power switch current. When the power switch current reaches the level set by the COMP voltage, the power switch is turned off. The COMP pin voltage increases and decreases as the output current increases and decreases. The device implements a current limit by clamping the COMP pin voltage to a maximum level. The Eco-mode control scheme is implemented with a minimum clamp on the COMP pin.

7.3.2 Slope Compensation Output Current

The TPS54260-EP adds a compensating ramp to the switch current signal. This slope compensation prevents sub-harmonic oscillations. The available peak inductor current remains constant over the full duty cycle range.

Copyright © 2016–2017, Texas Instruments Incorporated

Feature Description (continued)

7.3.3 Pulse Skip Eco-mode Control Scheme

The TPS54260-EP operates in a pulse skip Eco-mode control scheme at light load currents to improve efficiency by reducing switching and gate drive losses. The TPS54260-EP is designed so that if the output voltage is within regulation and the peak switch current at the end of any switching cycle is below the pulse skipping current threshold, the device enters Eco-mode control scheme. This current threshold is the current level corresponding to a nominal COMP voltage or 500 mV.

When in Eco-mode control scheme, the COMP pin voltage is clamped at 500 mV and the high-side MOSFET is inhibited. Further decreases in load current or in output voltage can not drive the COMP pin below this clamp voltage level.

Because the device is not switching, the output voltage begins to decay. As the voltage control loop compensates for the falling output voltage, the COMP pin voltage begins to rise. At this time, the high-side MOSFET is enabled and a switching pulse initiates on the next switching cycle. The peak current is set by the COMP pin voltage. The output voltage re-charges the regulated value, then the peak switch current starts to decrease, and eventually falls below the Eco-mode light load efficiency threshold at which time the device again enters Eco-mode control scheme.

For Eco-mode light load efficiency operation, the TPS54260-EP senses peak current, not average or load current, so the load current where the device enters Eco-mode control scheme is dependent on the output inductor value. For example, the circuit in Figure 46 enters Eco-mode control scheme at about 5 mA of output current. When the load current is low and the output voltage is within regulation, the device enters a sleep mode and draws only 138-μA input quiescent current. The internal PLL remains operating when in sleep mode. When operating at light load currents in the pulse skip mode, the switching transitions occur synchronously with the external clock signal.

7.3.4 Low Dropout Operation and Bootstrap Voltage (Boot)

The TPS54260-EP has an integrated boot regulator, and requires a small ceramic capacitor between the BOOT and PH pins to provide the gate drive voltage for the high-side MOSFET. The BOOT capacitor is refreshed when the high-side MOSFET is off and the low-side diode conducts. The value of this ceramic capacitor should be 0.1 μF. A ceramic capacitor with an X7R or X5R grade dielectric with a voltage rating of 10 V or higher is recommended because of the stable characteristics overtemperature and voltage.

To improve drop out, the TPS54260-EP is designed to operate at 100% duty cycle as long as the BOOT to PH pin voltage is greater than 2.1 V. When the voltage from BOOT to PH drops below 2.1 V, the high-side MOSFET is turned off using an UVLO circuit which allows the low-side diode to conduct and refresh the charge on the BOOT capacitor. Because the supply current sourced from the BOOT capacitor is low, the high-side MOSFET remains on for more switching cycles than are required to refresh the capacitor, thus the effective duty cycle of the switching regulator is high.

The effective duty cycle during dropout of the regulator is mainly influenced by the voltage drops across the power MOSFET, inductor resistance, low-side diode and printed circuit board resistance. During operating conditions in which the input voltage drops and the regulator is operating in continuous conduction mode, the high-side MOSFET can remain on for 100% of the duty cycle to maintain output regulation, until the BOOT to PH voltage falls below 2.1 V.

Attention must be taken in maximum duty cycle applications which experience extended time periods with light loads or no load. When the voltage across the BOOT capacitor falls below the 2.1 V UVLO threshold, the high-side MOSFET is turned off, but there may not be enough inductor current to pull the PH pin down to recharge the BOOT capacitor. The high-side MOSFET of the regulator stops switching because the voltage across the BOOT capacitor is less than 2.1 V. The output capacitor then decays until the difference in the input voltage and output voltage is greater than 2.1 V, at which point the BOOT UVLO threshold is exceeded, and the device starts switching again until the desired output voltage is reached. This operating condition persists until the input voltage and/or the load current increases. TI recommends to adjust the VIN stop voltage greater than the BOOT UVLO trigger condition at the minimum load of the application using the adjustable VIN UVLO feature with resistors on the EN pin.

Copyright © 2016–2017, Texas Instruments Incorporated

Feature Description (continued)

The start and stop voltages for typical 3.3-V and 5-V output applications are shown in Figure 21 and Figure 22. The voltages are plotted versus load current. The start voltage is defined as the input voltage needed to regulate the output within 1%. The stop voltage is defined as the input voltage at which the output drops by 5% or stops switching.

During high duty cycle conditions, the inductor current ripple increases while the BOOT capacitor is being recharged resulting in an increase in ripple voltage on the output. This is due to the recharge time of the boot capacitor being longer than the typical high-side off time when switching occurs every cycle.

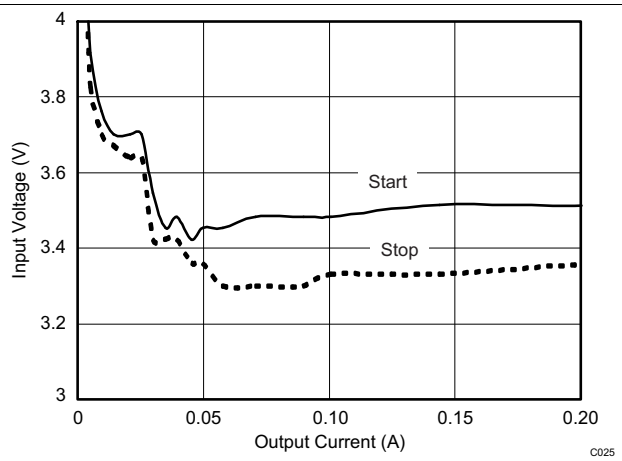

Figure 21. 3.3-V Start and Stop Voltage

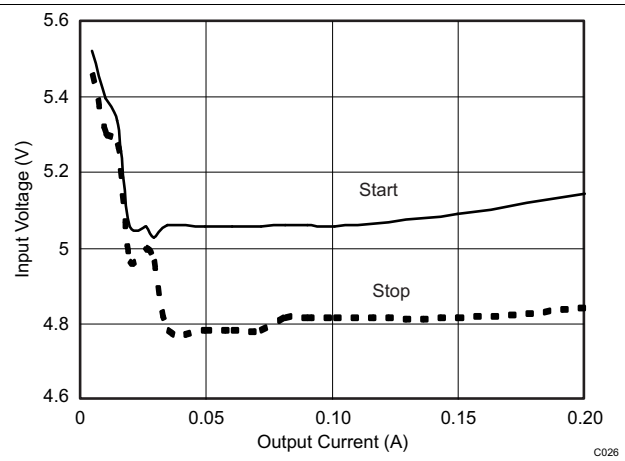

Figure 22. 5-V Start and Stop Voltage

7.3.5 Error Amplifier

The TPS54260-EP has a transconductance amplifier for the error amplifier. The error amplifier compares the VSENSE voltage to the lower of the SS/TR pin voltage or the internal 0.8-V voltage reference. The transconductance (gm) of the error amplifier is 310 μA/V during normal operation. During the slow-start operation, the transconductance is a fraction of the normal operating gm. When the voltage of the VSENSE pin is below 0.8 V and the device is regulating using the SS/TR voltage, the gm is 70 μA/V.

The frequency compensation components (capacitor, series resistor and capacitor) are added to the COMP pin to ground.

7.3.6 Voltage Reference

The voltage reference system produces a precise ±2% voltage reference overtemperature by scaling the output of a temperature stable bandgap circuit.

7.3.7 Adjusting the Output Voltage

The output voltage is set with a resistor divider from the output node to the VSENSE pin. TI recommends to use 1% tolerance or better divider resistors. Start with a 10 kΩ for the R2 resistor and use the Equation 1 to calculate R1. To improve efficiency at light loads consider using larger value resistors. If the values are too high the regulator is more susceptible to noise and voltage errors from the VSENSE input current is noticeable.

$$R1 = R2 \times \left(\frac{Vout - 0.8V}{0.8\ V} \right) \tag{1}$$

Copyright © 2016–2017, Texas Instruments Incorporated

Feature Description (continued)

7.3.8 Enable and Adjusting Undervoltage Lockout (UVLO)

The TPS54260-EP is disabled when the VIN pin voltage falls below 2.5 V. If an application requires a higher UVLO, use the EN pin as shown in Figure 23 to adjust the input voltage UVLO by using the two external resistors. Though it is not necessary to use the UVLO adjust registers, for operation it is highly recommended to provide consistent power up behavior. The EN pin has an internal pull-up current source, I1, of 0.9 μA that provides the default condition of the TPS54260-EP operating when the EN pin floats. Once the EN pin voltage exceeds 1.25 V, an additional 2.9 μA of hysteresis, Ihys, is added. This additional current facilitates input voltage hysteresis. Use Equation 2 to set the external hysteresis for the input voltage. Use Equation 3 to set the input start voltage.

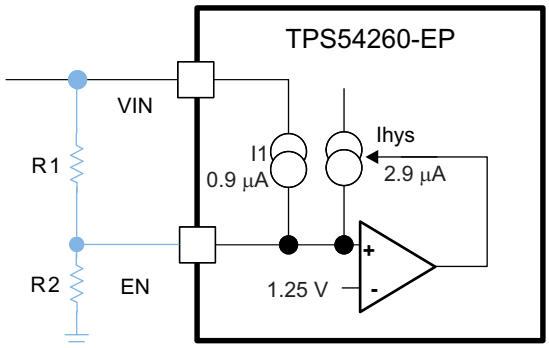

Copyright © 2016, Texas Instruments Incorporated

Figure 23. Adjustable UVLO

$$R1 = \frac{V_{START} - V_{STOP}}{I_{HYS}} \tag{2}$$

$$R2 = \frac{V_{ENA}}{\frac{V_{START} - V_{ENA}}{R1} + I_1} \tag{3}$$

Another technique to add input voltage hysteresis is shown in Figure 24. This method may be used, if the resistance values are high from the previous method and a wider voltage hysteresis is needed. The resistor R3 sources additional hysteresis current into the EN pin.

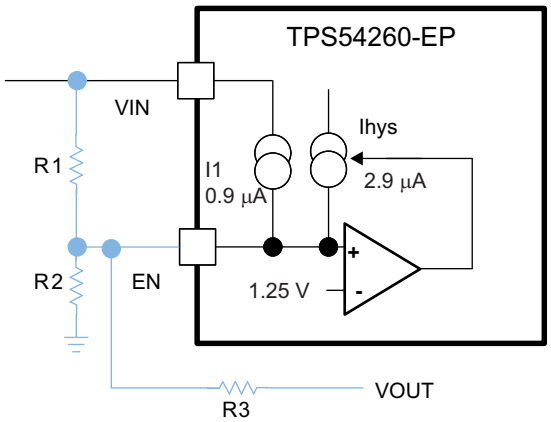

Copyright © 2016, Texas Instruments Incorporated

Figure 24. Adding Additional Hysteresis

Feature Description (continued)

$$R1 = \frac{V_{START} - V_{STOP}}{I_{HYS} + \frac{V_{OUT}}{R3}} \tag{4}$$

$$R2 = \frac{V_{ENA}}{\frac{V_{START} - V_{ENA}}{R1} + I_1 - \frac{V_{ENA}}{R3}} \tag{5}$$

Do not place a low-impedance voltage source with greater than 5 V directly on the EN pin. Do not place a capacitor directly on the EN pin if V_{EN} > 5 V when using a voltage divider to adjust the start and stop voltage. The node voltage, (see Figure 25) must remain equal to or less than 5.8 V. The Zener diode can sink up to 100 µA. The EN pin voltage can be greater than 5 V if the V_{IN} voltage source has a high impedance and does not source more than 100 µA into the EN pin.

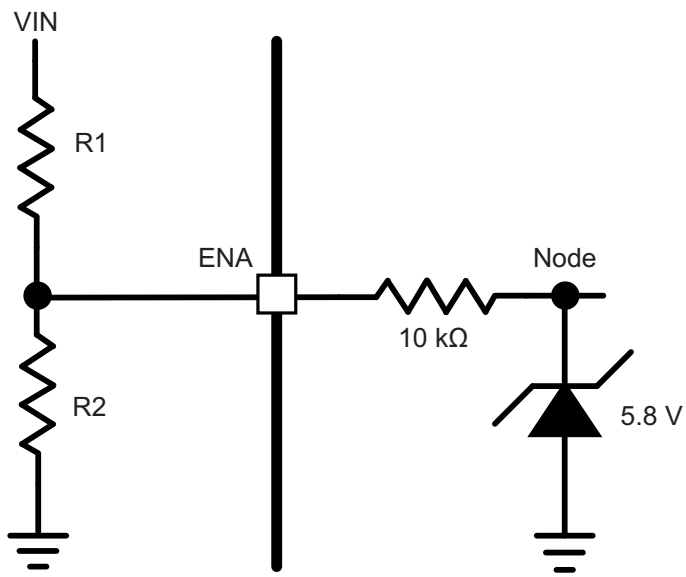

Figure 25. Node Voltage

7.3.9 Slow-Start and Tracking Pin (SS/TR)

The TPS54260-EP effectively uses the lower voltage of the internal voltage reference or the SS/TR pin voltage as the reference voltage of the power-supply and regulates the output accordingly. A capacitor on the SS/TR pin to ground implements a slow-start time. The TPS54260-EP has an internal pull-up current source of 2 µA that charges the external slow-start capacitor. The calculations for the slow-start time (10% to 90%) are shown in Equation 6. The voltage reference (V_{REF}) is 0.8 V and the slow-start current (I_{SS}) is 2 µA. The slow-start capacitor should remain lower than 0.47 µF and greater than 0.47 nF.

$$Css(nF) = \frac{Tss(ms) \times Iss(\mu A)}{Vref\ (V) \times 0.8} \tag{6}$$

At power up, the TPS54260-EP does not start switching until the slow-start pin is discharged to less than 40 mV to ensure a proper power up, see Figure 26.

Also, during normal operation, the TPS54260-EP stops switching and the SS/TR must be discharged to 40 mV, when the VIN UVLO is exceeded, EN pin pulled below 1.25 V, or a thermal shutdown event occurs.

The VSENSE voltage follows the SS/TR pin voltage with a 45-mV offset up to 85% of the internal voltage reference. When the SS/TR voltage is greater than 85% on the internal reference voltage the offset increases as the effective system reference transitions from the SS/TR voltage to the internal voltage reference (see Figure 19). The SS/TR voltage ramps linearly until clamped at 1.7 V.

Copyright © 2016–2017, Texas Instruments Incorporated

Feature Description (continued)

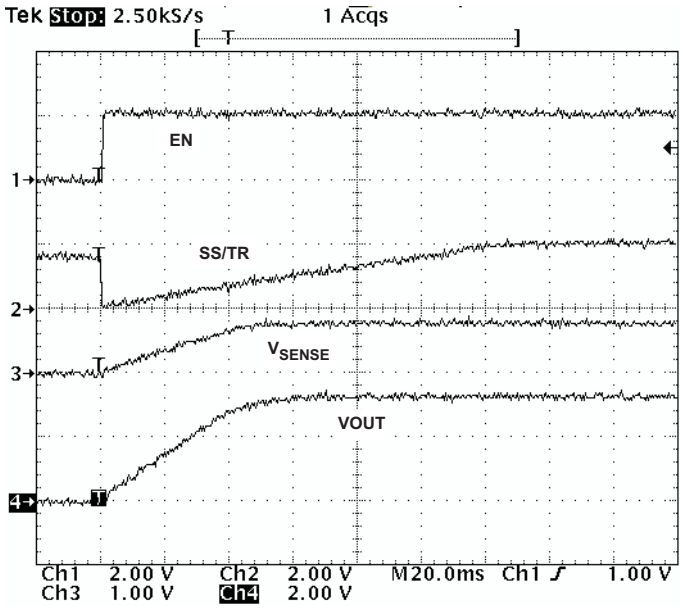

Figure 26. Operation of SS/TR Pin When Starting

7.3.10 Overload Recovery Circuit

The TPS54260-EP has an overload recovery (OLR) circuit. The OLR circuit slow-starts the output from the overload voltage to the nominal regulation voltage once the fault condition is removed. The OLR circuit discharges the SS/TR pin to a voltage slightly greater than the VSENSE pin voltage using an internal pull down of 382 μA when the error amplifier is changed to a high voltage from a fault condition. When the fault condition is removed, the output slow-starts from the fault voltage to nominal output voltage.

7.3.11 Constant Switching Frequency and Timing Resistor (RT and CLK Pin)

The switching frequency of the TPS54260-EP is adjustable over a wide range from approximately 100 kHz to 2500 kHz by placing a resistor on the RT/CLK pin. The RT/CLK pin voltage is typically 0.5 V and must have a resistor to ground to set the switching frequency. To determine the timing resistance for a given switching frequency, use Equation 7 or the curves in Figure 27 or Figure 28. To reduce the solution size one would typically set the switching frequency as high as possible, but tradeoffs of the supply efficiency, maximum input voltage and minimum controllable on time should be considered.

The minimum controllable on time is typically 135 ns and limits the maximum operating input voltage.

The maximum switching frequency is also limited by the frequency shift circuit. More discussion on the details of the maximum switching frequency is located below.

$$\text{RT } (\text{k}\Omega) = \frac{206033}{f\text{sw } (\text{kHz})^{1.0888}} \tag{7}$$

Feature Description (continued)

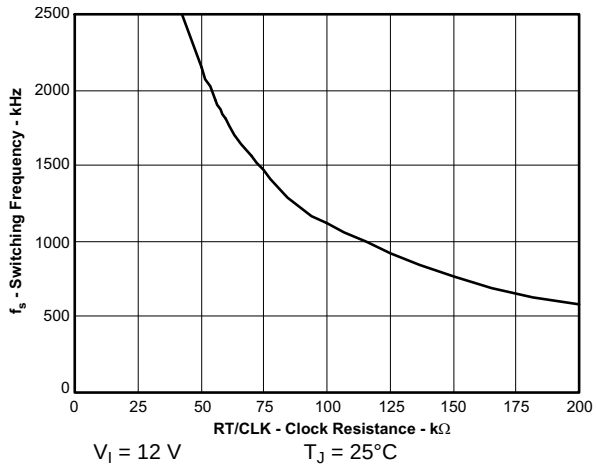

Figure 27. High-Range RT

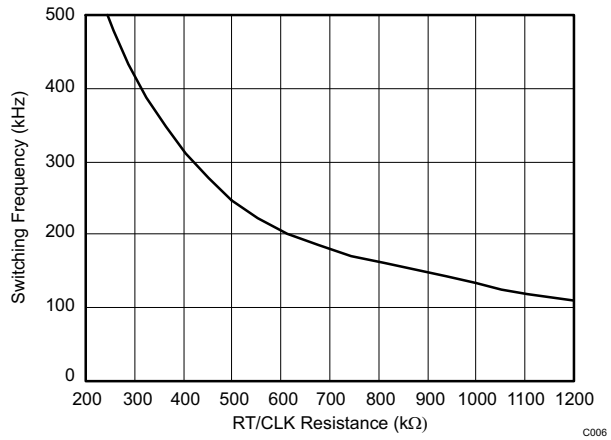

Figure 28. Low-Range RT

7.3.12 Overcurrent Protection and Frequency Shift

The TPS54260-EP implements current mode control which uses the COMP pin voltage to turn off the high-side MOSFET on a cycle by cycle basis. Each cycle the switch current and COMP pin voltage are compared, when the peak switch current intersects the COMP voltage, the high-side switch is turned off. During overcurrent conditions that pull the output voltage low, the error amplifier responds by driving the COMP pin high, increasing the switch current. The error amplifier output is clamped internally, which functions as a switch current limit.

To increase the maximum operating switching frequency at high input voltages the TPS54260-EP implements a frequency shift. The switching frequency is divided by 8, 4, 2, and 1 as the voltage ramps from 0 to 0.8 V on VSENSE pin.

The device implements a digital frequency shift to enable synchronizing to an external clock during normal startup and fault conditions. Because the device can only divide the switching frequency by 8, there is a maximum input voltage limit in which the device operates and still have frequency shift protection.

During short-circuit events (particularly with high input voltage applications), the control loop has a finite minimum controllable on time and the output has a low voltage. During the switch on time, the inductor current ramps to the peak current limit because of the high input voltage and minimum on time. During the switch off time, the inductor would normally not have enough off time and output voltage for the inductor to ramp down by the ramp up amount. The frequency shift effectively increases the off time allowing the current to ramp down.

7.3.13 Selecting the Switching Frequency

The switching frequency that is selected should be the lower value of the two equations, Equation 8 and Equation 9. Equation 8 is the maximum switching frequency limitation set by the minimum controllable on time. Setting the switching frequency above this value causes the regulator to skip switching pulses.

Equation 9 is the maximum switching frequency limit set by the frequency shift protection. To have adequate output short circuit protection at high input voltages, the switching frequency should be set to be less than the $f_{sw(maxshift)}$ frequency. In Equation 9, to calculate the maximum switching frequency one must take into account that the output voltage decreases from the nominal voltage to 0 V, the $f$div integer increases from 1 to 8 corresponding to the frequency shift.

In Figure 29, the solid line illustrates a typical safe operating area regarding frequency shift and assumes the output voltage is zero volts, and the resistance of the inductor is 0.130Ω, FET on resistance of 0.2 Ω and the diode voltage drop is 0.5 V. The dashed line is the maximum switching frequency to avoid pulse skipping. Enter these equations in a spreadsheet or other software or use the SwitcherPro design software to determine the switching frequency.

$$f_{SW(max\,skip)} = \left(\frac{1}{t_{ON}}\right) \times \left(\frac{(I_L \times Rdc + V_{OUT} + Vd)}{(V_{IN} - I_L \times Rhs + Vd)}\right) \quad (8)$$

Copyright © 2016–2017, Texas Instruments Incorporated

Feature Description (continued)

$$f_{SW(shift)} = \frac{fdiv}{t_{ON}} \times \left(\frac{(I_L \times Rdc + V_{OUTSC} + Vd)}{(V_{IN} - I_L \text{ x } Rhs + Vd)} \right)$$

where

- I_L = Inductor current
- Rdc = Inductor resistance
- V_{IN} = Maximum input voltage
- V_{OUT} = Output voltage
- V_{OUTSC} = Output voltage during short
- Vd = Diode voltage drop
- $R_{DS(on)}$ = Switch on resistance
- t_{ON} = Controllable on time
- f_{DIV} = Frequency divide equals (1, 2, 4, or 8) (9)

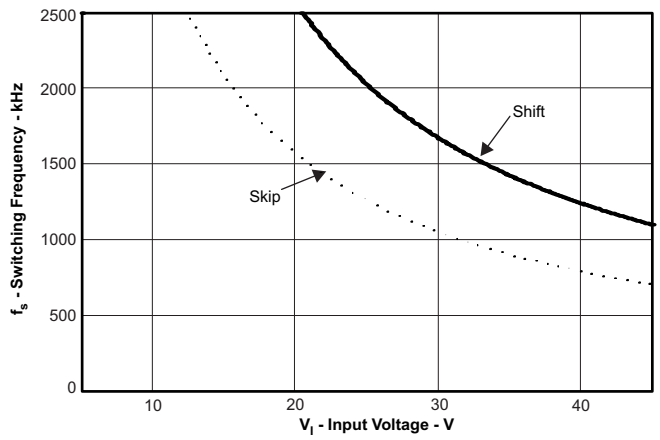

V_O = 3.3 V

Figure 29. Maximum Switching Frequency vs Input Voltage

7.3.14 How to Interface to RT/CLK Pin

The RT/CLK pin can be used to synchronize the regulator to an external system clock. To implement the synchronization feature connect a square wave to the RT/CLK pin through the circuit network shown in Figure 30. The square wave amplitude must transition lower than 0.5 V and higher than 2.2 V on the RT/CLK pin and have an on time greater than 40 ns and an off time greater than 40 ns. The synchronization frequency range is 300 kHz to 2200 kHz. The rising edge of the PH is synchronized to the falling edge of RT/CLK pin signal. The external synchronization circuit should be designed in such a way that the device has the default frequency set resistor connected from the RT/CLK pin to ground should the synchronization signal turn off. TI recommends to use a frequency set resistor connected as shown in Figure 30 through a 50-Ω resistor to ground. The resistor should set the switching frequency close to the external CLK frequency. TI recommends to ac couple the synchronization signal through a 10 pF ceramic capacitor to RT/CLK pin and a 4-kΩ series resistor. The series resistor reduces PH jitter in heavy load applications when synchronizing to an external clock and in applications which transition from synchronizing to RT mode. The first time the CLK is pulled above the CLK threshold the device switches from the RT resistor frequency to PLL mode. The internal 0.5V voltage source is removed and the CLK pin becomes high impedance as the PLL starts to lock onto the external signal. Because there is a PLL on the regulator the switching frequency can be higher or lower than the frequency set with the external resistor. The device transitions from the resistor mode to the PLL mode and then increases or decreases the switching frequency until the PLL locks onto the CLK frequency within 100 ms.

Feature Description (continued)

When the device transitions from the PLL to resistor mode the switching frequency slows down from the CLK frequency to 150 kHz, then reapplies the 0.5-V voltage and the resistor then sets the switching frequency. The switching frequency is divided by 8, 4, 2, and 1 as the voltage ramps from 0 to 0.8 V on VSENSE pin. The device implements a digital frequency shift to enable synchronizing to an external clock during normal startup and fault conditions. Figure 31, Figure 32, and Figure 33 show the device synchronized to an external system clock in continuous conduction mode (CCM) discontinuous conduction (DCM) and pulse skip mode (psm).

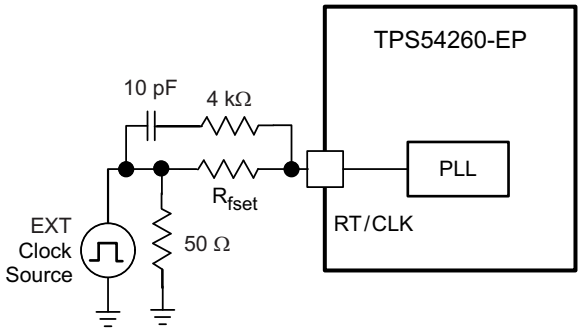

Copyright © 2016, Texas Instruments Incorporated

Figure 30. Synchronizing to a System Clock

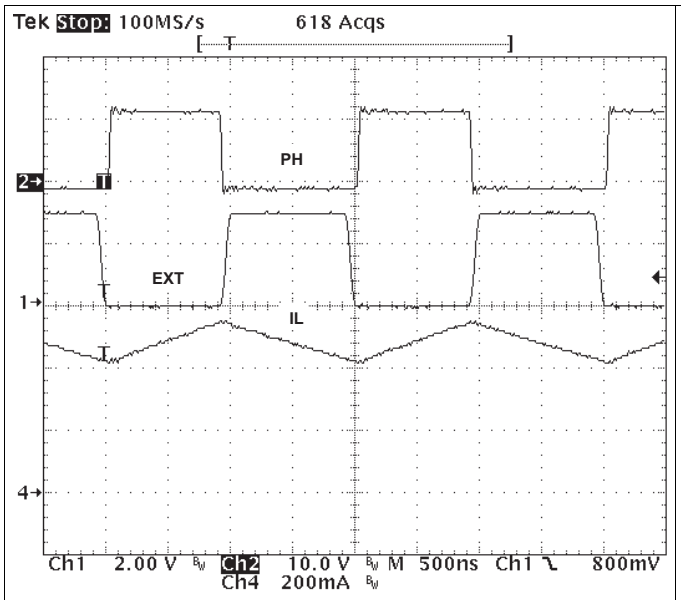

Figure 31. Plot of Synchronizing in CCM

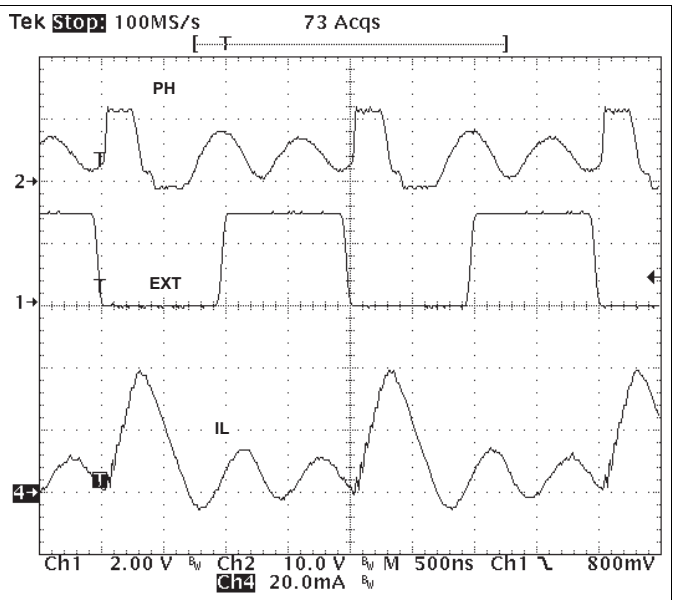

Figure 32. Plot of Synchronizing in DCM

Copyright © 2016–2017, Texas Instruments Incorporated

Feature Description (continued)

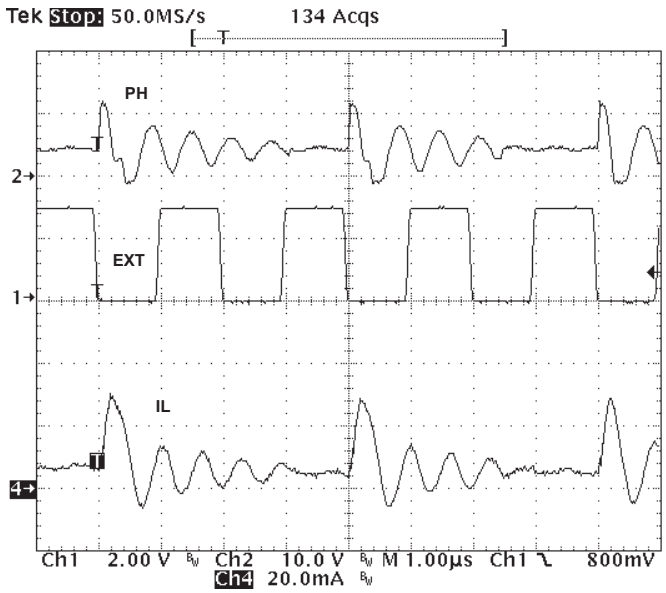

Figure 33. Plot of Synchronizing in PSM

7.3.15 Power Good (PWRGDPin)

The PWRGD pin is an open drain output. Once the VSENSE pin is between 94% and 107% of the internal voltage reference the PWRGD pin is de-asserted and the pin floats. TI recommends to use a pull-up resistor between the values of 1 kΩ and 100 kΩ to a voltage source that is 5.5 V or less. The PWRGD is in a defined state once the VIN input voltage is greater than 1.5 V but with reduced current sinking capability. The PWRGD achieves full current sinking capability as VIN input voltage approaches 3 V.

The PWRGD pin is pulled low when the VSENSE is lower than 92% or greater than 109% of the nominal internal reference voltage. Also, the PWRGD is pulled low, if the UVLO or thermal shutdown are asserted or the EN pin pulled low.

7.3.16 Overvoltage Transient Protection (OVTP)

The TPS54260-EP incorporates an OVTP circuit to minimize voltage overshoot when recovering from output fault conditions or strong unload transients on power supply designs with low value output capacitance. For example, when the power supply output is overloaded the error amplifier compares the actual output voltage to the internal reference voltage. If the VSENSE pin voltage is lower than the internal reference voltage for a considerable time, the output of the error amplifier responds by clamping the error amplifier output to a high voltage. Thus, requesting the maximum output current. Once the condition is removed, the regulator output rises and the error amplifier output transitions to the steady state duty cycle. In some applications, the power supply output voltage can respond faster than the error amplifier output can respond, this actuality leads to the possibility of an output overshoot. The OVTP feature minimizes the output overshoot, when using a low value output capacitor, by implementing a circuit to compare the VSENSE pin voltage to OVTP threshold which is 109% of the internal voltage reference. If the VSENSE pin voltage is greater than the OVTP threshold, the high-side MOSFET is disabled preventing current from flowing to the output and minimizing output overshoot. When the VSENSE voltage drops lower than the OVTP threshold, the high-side MOSFET is allowed to turn on at the next clock cycle.

7.3.17 Thermal Shutdown

The device implements an internal thermal shutdown to protect itself if the junction temperature exceeds 182°C. The thermal shutdown forces the device to stop switching when the junction temperature exceeds the thermal trip threshold. Once the die temperature decreases below 182°C, the device reinitiates the power up sequence by discharging the SS/TR pin.

Copyright © 2016–2017, Texas Instruments Incorporated

Feature Description (continued)

7.3.18 Small Signal Model for Loop Response

Figure 34 shows an equivalent model for the TPS54260-EP control loop which can be modeled in a circuit simulation program to check frequency response and dynamic load response. The error amplifier is a transconductance amplifier with a gm_{EA} of 310 µA/V. The error amplifier can be modeled using an ideal voltage controlled current source. The resistor R_o and capacitor C_o model the open loop gain and frequency response of the amplifier. The 1mV ac voltage source between the nodes a and b effectively breaks the control loop for the frequency response measurements. Plotting c/a shows the small signal response of the frequency compensation. Plotting a/b shows the small signal response of the overall loop. The dynamic loop response can be checked by replacing R_L with a current source with the appropriate load step amplitude and step rate in a time domain analysis. This equivalent model is only valid for continuous conduction mode designs.

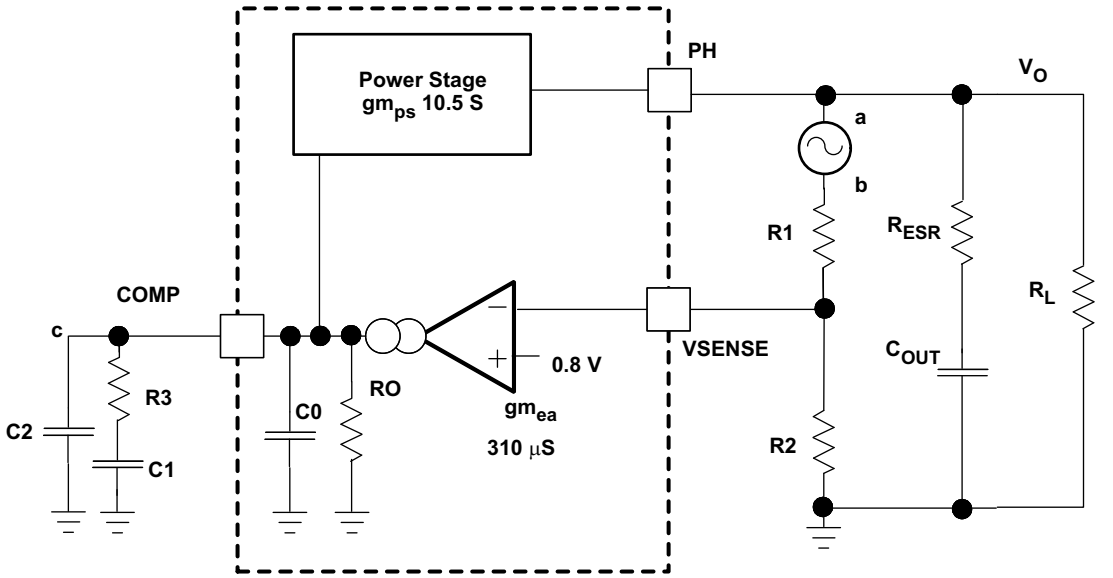

Copyright © 2016, Texas Instruments Incorporated

Figure 34. Small-Signal Model for Loop Response

7.3.19 Simple Small-Signal Model for Peak Current Mode Control

Figure 35 describes a simple small-signal model that can be used to understand how to design the frequency compensation. The TPS54260-EP power stage is approximated to a voltage-controlled current source (duty cycle modulator) supplying current to the output capacitor and load resistor. The control to output transfer function is shown in Equation 10 and consists of a dc gain, one dominant pole, and one ESR zero. The quotient of the change in switch current and the change in COMP pin voltage (node c in Figure 34) is the power stage transconductance. The gm_{PS} for the TPS54260-EP is 10.5 A/V. The low-frequency gain of the power stage frequency response is the product of the transconductance and the load resistance as shown in Equation 11.

As the load current increases and decreases, the low-frequency gain decreases and increases, respectively. This variation with the load may seem problematic at first glance, but fortunately the dominant pole moves with the load current (see Equation 12). The combined effect is highlighted by the dashed line in the right half of Figure 35. As the load current decreases, the gain increases and the pole frequency lowers, keeping the 0-dB crossover frequency the same for the varying load conditions which makes it easier to design the frequency compensation. The type of output capacitor chosen determines whether the ESR zero has a profound effect on the frequency compensation design. Using high ESR aluminum electrolytic capacitors may reduce the number frequency compensation components needed to stabilize the overall loop because the phase margin increases from the ESR zero at the lower frequencies (see Equation 13).

Copyright © 2016–2017, Texas Instruments Incorporated

Feature Description (continued)

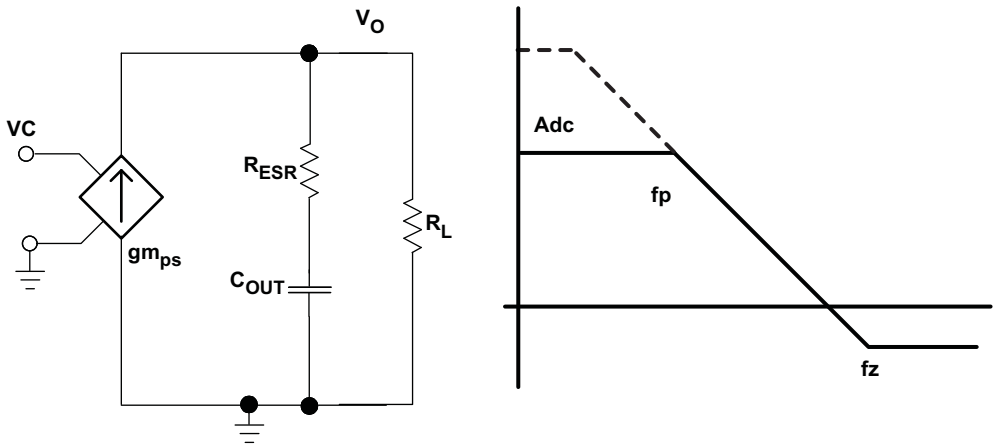

Figure 35. Simple Small-Signal Model and Frequency Response for Peak Current Mode Control

$$\frac{V_{OUT}}{V_C} = Adc \times \frac{\left(1 + \frac{s}{2\pi \times f_Z}\right)}{\left(1 + \frac{s}{2\pi \times f_P}\right)} \tag{10}$$

$$Adc = gm_{ps} \times R_L \tag{11}$$

$$f_P = \frac{1}{C_{OUT} \times R_L \times 2\pi} \tag{12}$$

$$f_Z = \frac{1}{C_{OUT} \times R_{ESR} \times 2\pi} \tag{13}$$

7.3.20 Small-Signal Model for Frequency Compensation

The TPS54260-EP uses a transconductance amplifier for the error amplifier and readily supports three of the commonly-used frequency compensation circuits. Compensation circuits Type 2A, Type 2B, and Type 1 are shown in Figure 36. Type 2 circuits most likely implemented in high bandwidth power-supply designs using low ESR output capacitors. The Type 1 circuit is used with power-supply designs with high-ESR aluminum electrolytic or tantalum capacitors.. Equation 14 and Equation 15 show how to relate the frequency response of the amplifier to the small signal model in Figure 36. The open-loop gain and bandwidth are modeled using the R_O and C_O shown in Figure 36. See the Figure 37 for a design example using a Type 2A network with a low ESR output capacitor.

Equation 14 through Equation 23 are provided as a reference for those who prefer to compensate using the preferred methods. Those who prefer to use prescribed method use the method outlined in the application section or use switched information.

Feature Description (continued)

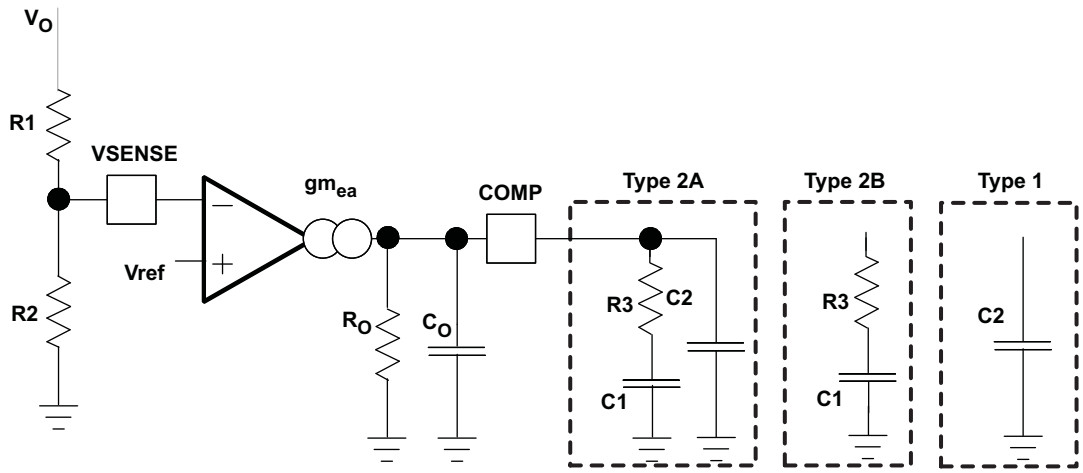

Figure 36. Types of Frequency Compensation

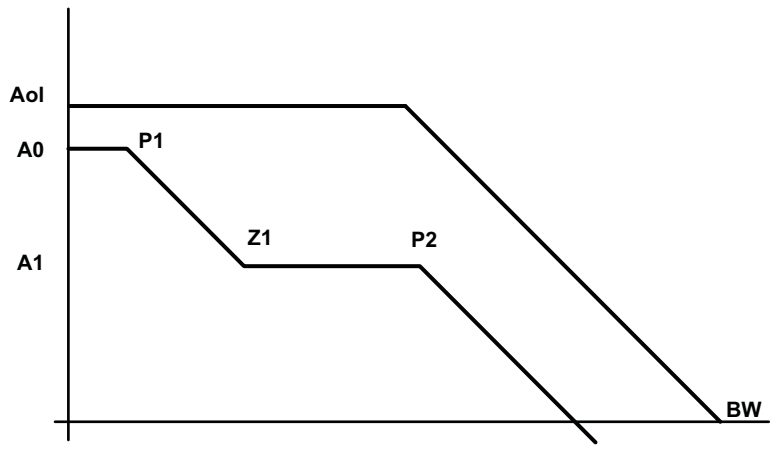

Figure 37. Frequency Response of the Type 2A and Type 2B Frequency Compensation

$$Ro = \frac{Aol(V/V)}{gm_{ea}} \tag{14}$$

$$C_O = \frac{gm_{ea}}{2\pi \times BW\ (Hz)} \tag{15}$$

$$EA = A0 \times \frac{\left(1 + \frac{s}{2\pi \times f_{Z1}}\right)}{\left(1 + \frac{s}{2\pi \times f_{P1}}\right) \times \left(1 + \frac{s}{2\pi \times f_{P2}}\right)} \tag{16}$$

$$A0 = gm_{ea} \times Ro \times \frac{R2}{R1 + R2} \tag{17}$$

$$A1 = gm_{ea} \times Ro|\,|\,R3 \times \frac{R2}{R1 + R2} \tag{18}$$

$$P1 = \frac{1}{2\pi \times Ro \times C1} \tag{19}$$

Copyright © 2016–2017, Texas Instruments Incorporated

Feature Description (continued)

$$Z1 = \frac{1}{2\pi \times R3 \times C1} \tag{20}$$

$$P2 = \frac{1}{2\pi \times R3 \,||\, R_O \times (C2 + C_O)} \text{ type 2a} \tag{21}$$

$$P2 = \frac{1}{2\pi \times R3 \,||\, R_O \times C_O} \text{ type 2b} \tag{22}$$

$$P2 = \frac{1}{2\pi \times R_O \times (C2 + C_O)} \text{ type 1} \tag{23}$$

7.4 Device Functional Modes

7.4.1 Sequencing

Many of the common power supply sequencing methods can be implemented using the SS/TR, EN and PWRGD pins. The sequential method can be implemented using an open drain output of a power on reset pin of another device. The sequential method is illustrated in Figure 38 using two TPS54260-EP devices. The power good is coupled to the EN pin on the TPS54260-EP which enables the second power supply once the primary supply reaches regulation. If needed, a 1-nF ceramic capacitor on the EN pin of the second power supply provides a 1-ms start-up delay. Figure 39 shows the results of Figure 38.

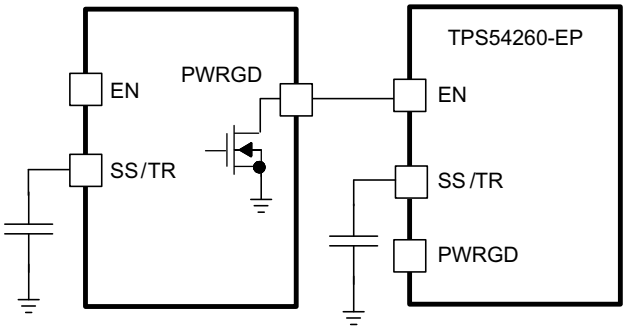

Copyright © 2016, Texas Instruments Incorporated

Figure 38. Schematic for Sequential Start-Up Sequence

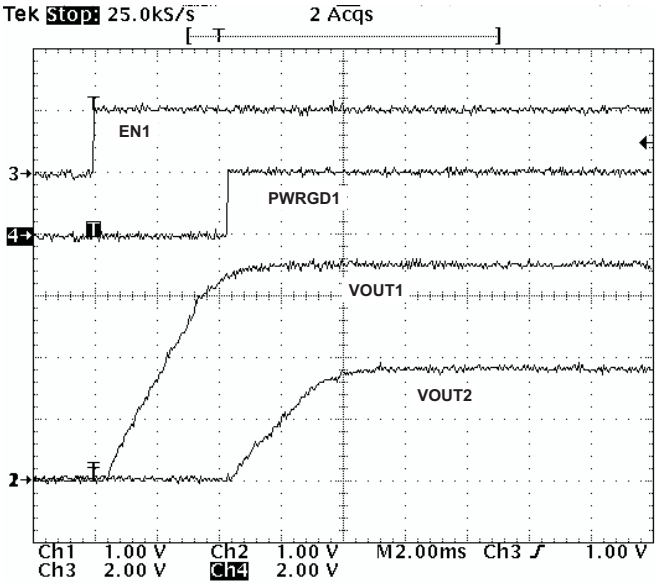

Figure 39. Sequential Startup Using EN and PWRGD

Device Functional Modes (continued)

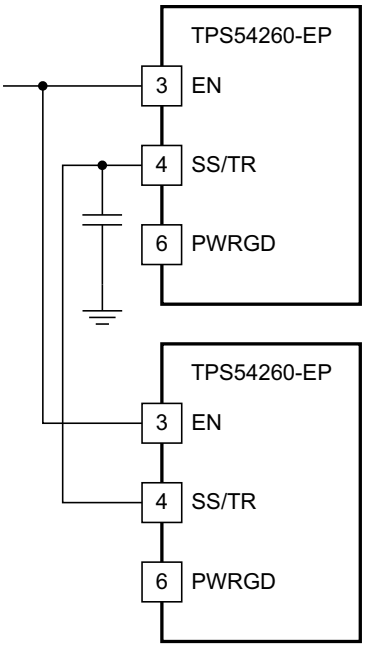

Copyright © 2016, Texas Instruments Incorporated

Figure 40. Schematic for Ratiometric Startup Using Coupled SS/TR Pins

Copyright © 2016–2017, Texas Instruments Incorporated

Device Functional Modes (continued)

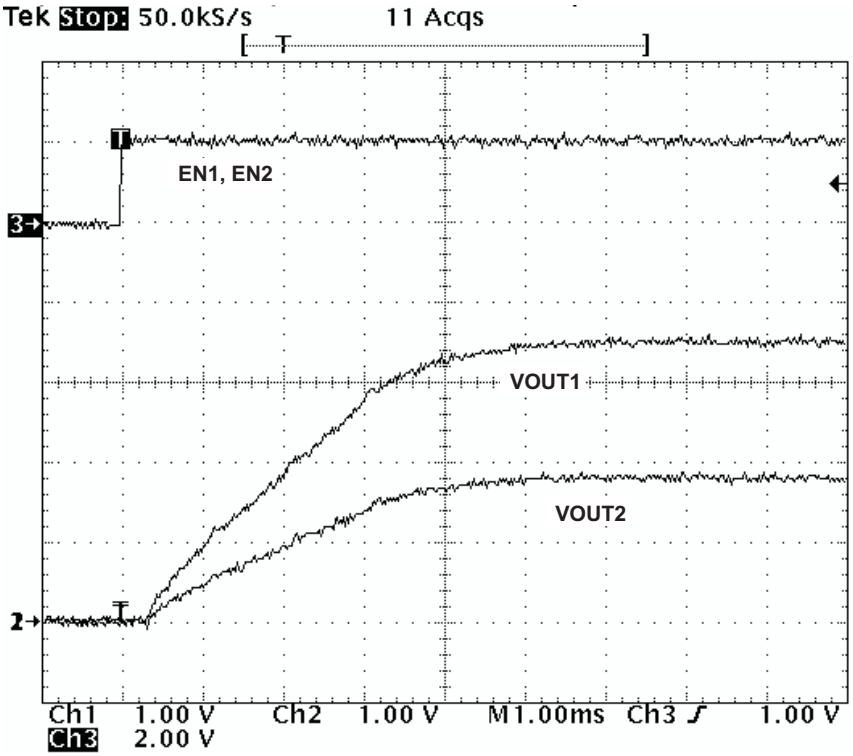

Figure 41. Ratiometric Startup Using Coupled SS/TR Pins

Figure 40 shows a method for ratio-metric start up sequence by connecting the SS/TR pins together. The regulator outputs ramps up and reaches regulation at the same time. When calculating the slow-start time the pull up current source must be doubled in Equation 6. Figure 41 shows the results of Figure 40.

Device Functional Modes (continued)

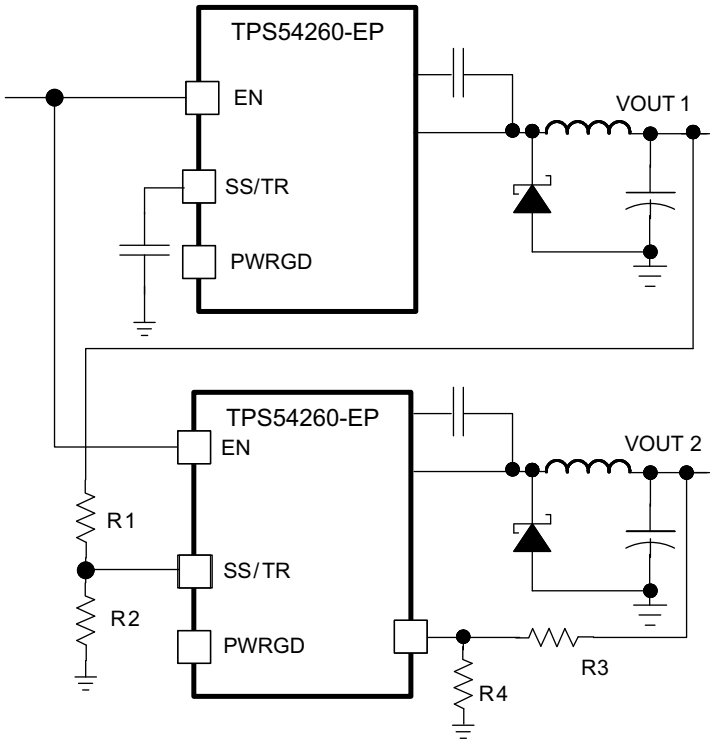

Copyright © 2016, Texas Instruments Incorporated

Figure 42. Schematic for Ratiometric and Simultaneous Start-Up Sequence

Ratiometric and simultaneous power supply sequencing can be implemented by connecting the resistor network of R1 and R2 shown in Figure 42 to the output of the power supply that needs to be tracked or another voltage reference source. Using Equation 24 and Equation 25, the tracking resistors can be calculated to initiate the Vout2 slightly before, after or at the same time as Vout1. Equation 26 is the voltage difference between Vout1 and Vout2 at the 95% of nominal output regulation.

The deltaV variable is zero volts for simultaneous sequencing. To minimize the effect of the inherent SS/TR to VSENSE offset (Vssoffset) in the slow-start circuit and the offset created by the pullup current source (Iss) and tracking resistors, the Vssoffset and Iss are included as variables in the equations.

To design a ratio-metric start up in which the Vout2 voltage is slightly greater than the Vout1 voltage when Vout2 reaches regulation, use a negative number in Equation 24 through Equation 26 for deltaV. Equation 26 results in a positive number for applications which the Vout2 is slightly lower than Vout1 when Vout2 regulation is achieved.

Because the SS/TR pin must be pulled below 40 mV before starting after an EN, UVLO or thermal shutdown fault, careful selection of the tracking resistors is needed to ensure the device restarts after a fault. Make sure the calculated R1 value from Equation 24 is greater than the value calculated in Equation 27 to ensure the device can recover from a fault.

As the SS/TR voltage becomes more than 85% of the nominal reference voltage the Vssoffset becomes larger as the slow-start circuits gradually handoff the regulation reference to the internal voltage reference. The SS/TR pin voltage needs to be greater than 1.3 V for a complete handoff to the internal voltage reference as shown in Figure 19.

$$R1 = \frac{Vout2 + deltaV}{VREF} \times \frac{Vssoffset}{Iss} \tag{24}$$

$$R2 = \frac{VREF \times R1}{Vout2 + deltaV - VREF} \tag{25}$$

Copyright © 2016–2017, Texas Instruments Incorporated

Device Functional Modes (continued)

$$deltaV = Vout1 - Vout2 \quad (26)$$

$$R1 > 2800 \times Vout1 - 180 \times deltaV \quad (27)$$

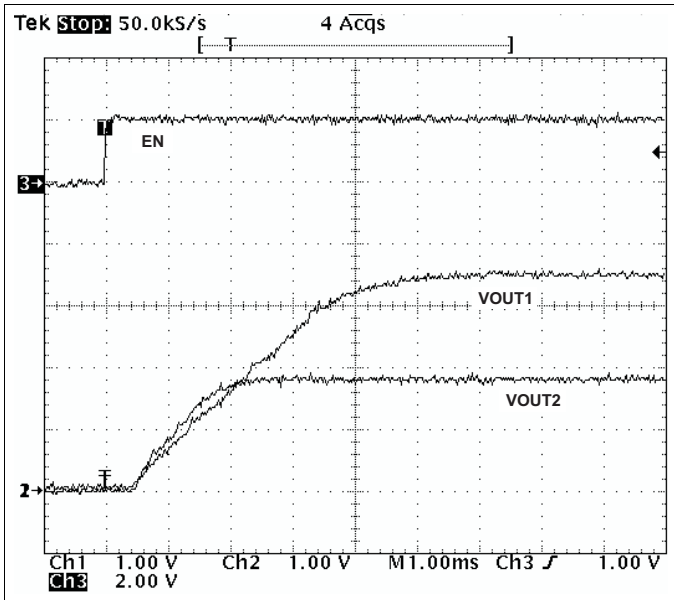

Figure 43. Ratiometric Startup With VOUT2 Leading VOUT1

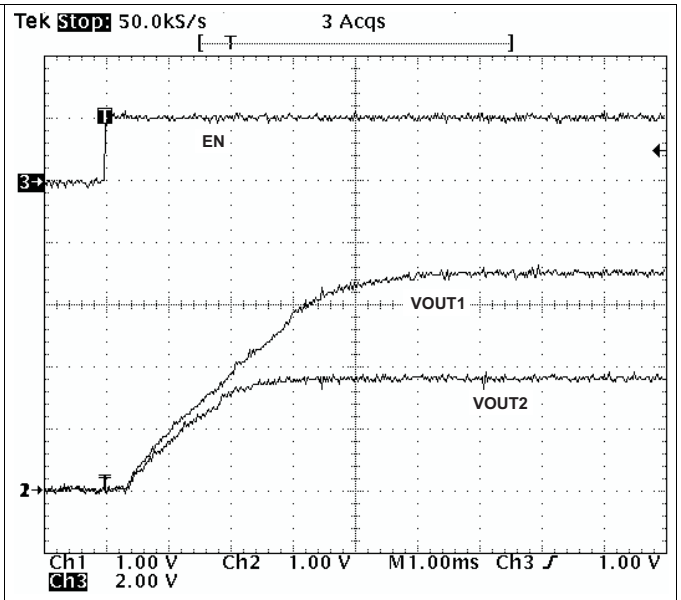

Figure 44. Ratiometric Startup With VOUT1 Leading VOUT2

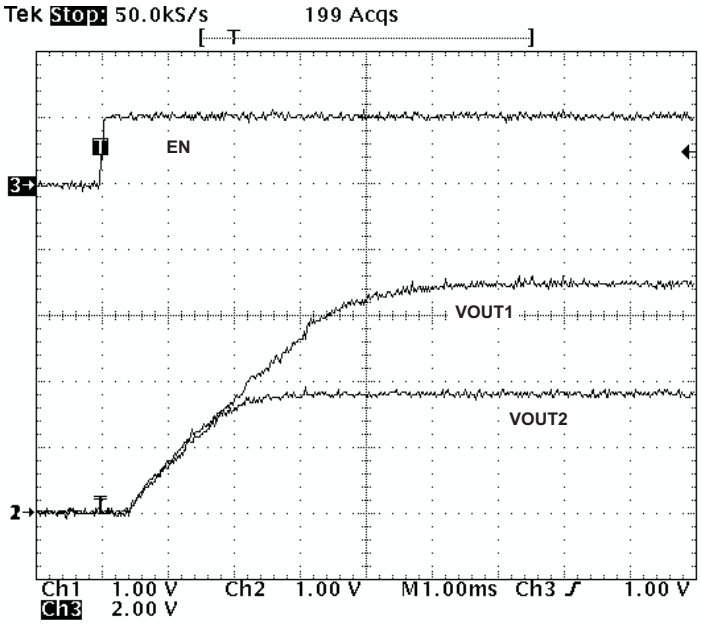

Figure 45. Simultaneous Startup With Tracking Resistor

8 Application and Implementation

NOTE

Information in the following applications sections is not part of the TI component specification, and TI does not warrant its accuracy or completeness. TI's customers are responsible for determining suitability of components for their purposes. Customers should validate and test their design implementation to confirm system functionality.

8.1 Application Information

The TPS54260 dc-dc converter is designed to provide up to a 2.5-A output from an input voltage source of 3.5 V to 60 V. The high-side MOSFET is incorporated inside the TPS54260 package along with the gate drive circuitry. The low drain-to-source on resistance of the MOSFET allows the TPS54260 to achieve high efficiencies and helps keep the junction temperature low at high-output currents. The compensation components are external to the integrated circuit (IC), and an external divider allows for an adjustable output voltage. Additionally, the TPS54260 provides adjustable slow-start and undervoltage lockout inputs.

8.2 Typical Application

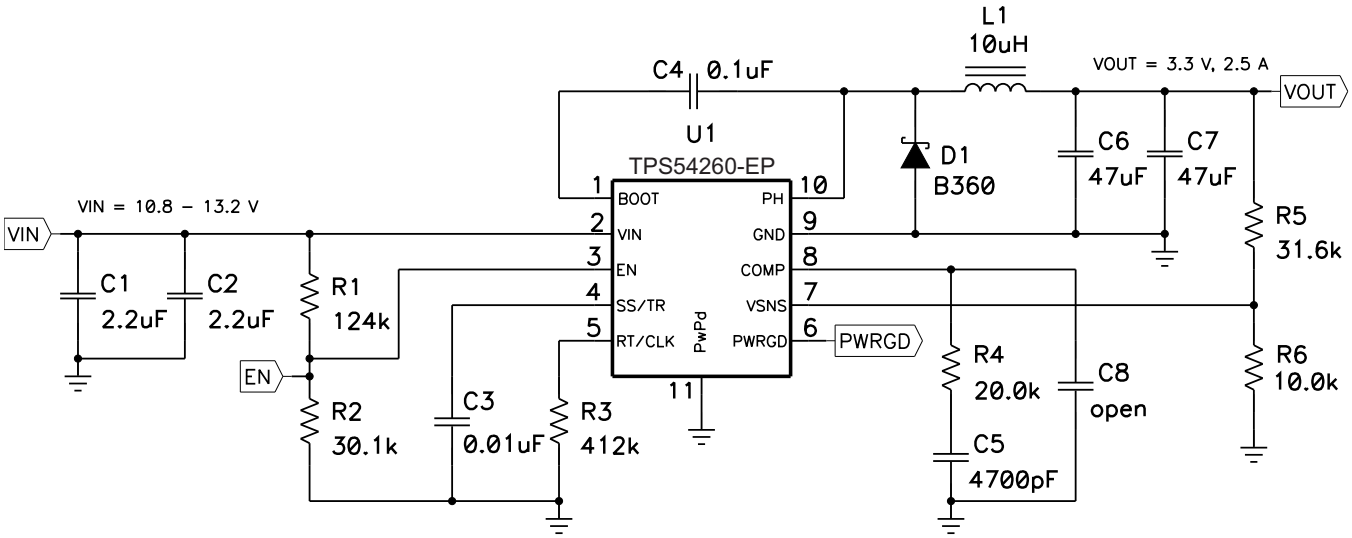

Copyright © 2016, Texas Instruments Incorporated

Figure 46. 3.3-V Output TPS54260-EP Design Example

8.2.1 Design Requirements

This example details the design of a high frequency switching regulator design using ceramic output capacitors. A few parameters must be known in order to start the design process. These parameters are typically determined at the system level. For this example, use the following known parameters:

Table 1. Design Parameters

DESIGN PARAMETER	EXAMPLE VALUE
Output voltage	3.3 V
Transient response 0- to 1.5-A load step	ΔVout = 3%
Maximum output current	2.5 A
Input voltage	12-V nominal, 10.8 V to 13.2 V
Output voltage ripple	1% of Vout
Start input voltage (rising VIN)	6 V
Stop input voltage (falling VIN)	5.5 V

Copyright © 2016–2017, Texas Instruments Incorporated

8.2.2 Detailed Design Procedure

8.2.2.1 Selecting The Switching Frequency

The first step is to decide on a switching frequency for the regulator. Typically, the user chooses the highest switching frequency possible because it produces the smallest solution size. The high switching frequency allows for lower valued inductors and smaller output capacitors compared to a power supply that switches at a lower frequency. The switching frequency that can be selected is limited by the minimum on-time of the internal power switch, the input voltage and the output voltage and the frequency shift limitation.

Equation 8 and Equation 9 must be used to find the maximum switching frequency for the regulator, choose the lower value of the two equations. Switching frequencies higher than these values result in pulse skipping or the lack of overcurrent protection during a short circuit.

The typical minimum on time, t_{onmin}, is 135 ns for the TPS54260-EP. For this example, the output voltage is 3.3 V and the maximum input voltage is 13.2 V, which allows for a maximum switch frequency up to 2247 kHz when including the inductor resistance, on resistance output current and diode voltage in Equation 8. To ensure overcurrent runaway is not a concern during short circuits in your design use Equation 9 or the solid curve in Figure 29 to determine the maximum switching frequency. With a maximum input voltage of 13.2 V, assuming a diode voltage of 0.7 V, inductor resistance of 26 mΩ, switch resistance of 200 mΩ, a current limit value of 3.5 A and a short circuit output voltage of 0.2 V. The maximum switching frequency is approximately 4449 kHz.

For this design, a much lower switching frequency of 300 kHz is used. To determine the timing resistance for a given switching frequency, use Equation 7 or the curve in Figure 28.

The switching frequency is set by resistor R_3 shown in Figure 46 For 300 kHz operation a 412 kΩ resistor is required.

8.2.2.2 Output Inductor Selection (L_O)

To calculate the minimum value of the output inductor, use Equation 28.

K_{IND} is a coefficient that represents the amount of inductor ripple current relative to the maximum output current.

The inductor ripple current is filtered by the output capacitor. Therefore, choosing high inductor ripple currents impact the selection of the output capacitor because the output capacitor must have a ripple current rating equal to or greater than the inductor ripple current. In general, the inductor ripple value is at the discretion of the designer; however, the following guidelines may be used.

For designs using low ESR output capacitors such as ceramics, a value as high as K_{IND} = 0.3 may be used. When using higher ESR output capacitors, K_{IND} = 0.2 yields better results. Because the inductor ripple current is part of the PWM control system, the inductor ripple current should always be greater than 150 mA for dependable operation. In a wide input voltage regulator, it is best to choose an inductor ripple current on the larger side. This allows the inductor to still have a measurable ripple current with the input voltage at its minimum.

For this design example, use K_{IND} = 0.3 and the minimum inductor value is calculated to be 11 μH. For this design, a nearest standard value was chosen: 10 μH. For the output filter inductor, it is important that the RMS current and saturation current ratings not be exceeded. The RMS and peak inductor current can be found from Equation 30 and Equation 31.

For this design, the RMS inductor current is 2.51 A and the peak inductor current is 2.913 A. The chosen inductor is a Coilcraft MSS1038-103NLB . It has a saturation current rating of 4.52 A and an RMS current rating of 4.05 A.

As the equation set demonstrates, lower ripple currents reduce the output voltage ripple of the regulator but require a larger value of inductance. Selecting higher ripple currents increase the output voltage ripple of the regulator but allow for a lower inductance value.

The current flowing through the inductor is the inductor ripple current plus the output current. During power up, faults or transient load conditions, the inductor current can increase above the calculated peak inductor current level calculated above. In transient conditions, the inductor current can increase up to the switch current limit of the device. For this reason, the most conservative approach is to specify an inductor with a saturation current rating equal to or greater than the switch current limit rather than the peak inductor current.

Copyright © 2016–2017, Texas Instruments Incorporated

$$Lo\ min = \frac{Vinmax - Vout}{Io \times K_{IND}} \times \frac{Vout}{Vinmax \times fsw} \tag{28}$$

$$I_{RIPPLE} = \frac{V_{OUT} \times (Vinmax - V_{OUT})}{Vinmax \times L_O \times f_{SW}} \tag{29}$$

$$I_{L(rms)} = \sqrt{(I_O)^2 + \frac{1}{12} \times \left(\frac{V_{OUT} \times (Vinmax - V_{OUT})}{Vinmax \times L_O \times f_{SW}}\right)^2} \tag{30}$$

$$ILpeak = Iout + \frac{Iripple}{2} \tag{31}$$

8.2.2.3 Output Capacitor

There are three primary considerations for selecting the value of the output capacitor. The output capacitor determines the modulator pole, the output voltage ripple, and how the regulators responds to a large change in load current. The output capacitance needs to be selected based on the more stringent of these three criteria.

The desired response to a large change in the load current is the first criteria. The output capacitor needs to supply the load with current when the regulator can not. This situation would occur if there are desired hold-up times for the regulator where the output capacitor must hold the output voltage above a certain level for a specified amount of time after the input power is removed. The regulator also temporarily is not able to supply sufficient output current if there is a large, fast increase in the current needs of the load such as transitioning from no load to a full load. The regulator usually needs two or more clock cycles for the control loop to see the change in load current and output voltage and adjust the duty cycle to react to the change. The output capacitor must be sized to supply the extra current to the load until the control loop responds to the load change. The output capacitance must be large enough to supply the difference in current for 2 clock cycles while only allowing a tolerable amount of droop in the output voltage. Equation 32 shows the minimum output capacitance necessary to accomplish this.

Where ΔIout is the change in output current, *f*sw is the regulators switching frequency and ΔVout is the allowable change in the output voltage. For this example, the transient load response is specified as a 3% change in Vout for a load step from 1.5 A to 2.5 A (full load). For this example, ΔIout = 2.5 – 1.5 = 1 A and ΔVout = 0.03 × 3.3 = 0.099 V. Using these numbers gives a minimum capacitance of 67 μF. This value does not take the ESR of the output capacitor into account in the output voltage change. For ceramic capacitors, the ESR is usually small enough to ignore in this calculation. Aluminum electrolytic and tantalum capacitors have higher ESR that should be taken into account.

The catch diode of the regulator can not sink current so any stored energy in the inductor produces an output voltage overshoot when the load current rapidly decreases, see Figure 47. The output capacitor must also be sized to absorb energy stored in the inductor when transitioning from a high-load current to a lower load current. The excess energy that gets stored in the output capacitor increases the voltage on the capacitor. The capacitor must be sized to maintain the desired output voltage during these transient periods. Equation 33 is used to calculate the minimum capacitance to keep the output voltage overshoot to a desired value. Where L is the value of the inductor, I_{OH} is the output current under heavy load, I_{OL} is the output under light load, Vf is the final peak output voltage, and Vi is the initial capacitor voltage. For this example, the worst case load step is from 2.5 A to 1.5 A. The output voltage increases during this load transition and the stated maximum in our specification is 3% of the output voltage. This makes Vf = 1.03 × 3.3 = 3.399. Vi is the initial capacitor voltage which is the nominal output voltage of 3.3 V. Using these numbers in Equation 33 yields a minimum capacitance of 60 μF.

Equation 34 calculates the minimum output capacitance needed to meet the output voltage ripple specification. Where fsw is the switching frequency, $V_{oripple}$ is the maximum allowable output voltage ripple, and I_{ripple} is the inductor ripple current. Equation 34 yields 12 μF.

Equation 35 calculates the maximum ESR an output capacitor can have to meet the output voltage ripple specification. Equation 35 indicates the ESR should be less than 36 mΩ.

The most stringent criteria for the output capacitor is 67 μF of capacitance to keep the output voltage in regulation during an load transient.

Copyright © 2016–2017, Texas Instruments Incorporated

Additional capacitance de-ratings for aging, temperature and dc bias should be factored in which increases this minimum value. For this example, 2 × 47-µF, 10-V ceramic capacitors with 3 mΩ of ESR is used. The derated capacitance is 72.4 µF, above the minimum required capacitance of 67 µF.

Capacitors generally have limits to the amount of ripple current they can handle without failing or producing excess heat. An output capacitor that can support the inductor ripple current must be specified. Some capacitor data sheets specify the Root Mean Square (RMS) value of the maximum ripple current. Equation 36 can be used to calculate the RMS ripple current the output capacitor needs to support. For this application, Equation 36 yields 238 mA.

$$C_{OUT} > \frac{2 \times \Delta I_{OUT}}{f_{SW} \times \Delta V_{OUT}} \tag{32}$$

$$C_{OUT} > L_O \times \frac{\left((I_{OH})^2 - (I_{OL})^2\right)}{\left((V_f)^2 - (V_i)^2\right)} \tag{33}$$

$$Cout > \frac{1}{8 \times fsw} \times \frac{1}{\frac{V_{ORIPPLE}}{I_{RIPPLE}}} \tag{34}$$

$$R_{ESR} < \frac{V_{ORIPPLE}}{I_{RIPPLE}} \tag{35}$$

$$Icorms = \frac{Vout \times (Vin\ max - Vout)}{\sqrt{12} \times Vin\ max \times Lo \times fsw} \tag{36}$$

8.2.2.4 Catch Diode

The TPS54260-EP requires an external catch diode between the PH pin and GND. The selected diode must have a reverse voltage rating equal to or greater than Vinmax. The peak current rating of the diode must be greater than the maximum inductor current. The diode should also have a low-forward voltage. Schottky diodes are typically a good choice for the catch diode due to their low-forward voltage. The lower the forward voltage of the diode, the higher the efficiency of the regulator.

Typically, the higher the voltage and current ratings the diode has, the higher the forward voltage is. Although the design example has an input voltage up to 13.2 V, a diode with a minimum of 60-V reverse voltage is selected.

For the example design, the B360B-13-F Schottky diode is selected for its lower forward voltage and it comes in a larger package size which has good thermal characteristics over small devices. The typical forward voltage of the B360B-13-F is 0.7 V.

The diode must also be selected with an appropriate power rating. The diode conducts the output current during the off-time of the internal power switch. The off-time of the internal switch is a function of the maximum input voltage, the output voltage, and the switching frequency. The output current during the off-time is multiplied by the forward voltage of the diode which equals the conduction losses of the diode. At higher switch frequencies, the ac losses of the diode need to be taken into account. The ac losses of the diode are due to the charging and discharging of the junction capacitance and reverse recovery. Equation 37 is used to calculate the total power dissipation, conduction losses plus ac losses, of the diode.

The B360B-13-F has a junction capacitance of 200 pF. Using Equation 37, the selected diode dissipates 1.32 W.

If the power supply spends a significant amount of time at light load currents or in sleep mode consider using a diode which has a low-leakage current and slightly higher forward voltage drop.

$$Pd = \frac{(Vin\ max - Vout) \times Iout \times Vfd}{Vin\ max} + \frac{Cj \times fsw \times (Vin + Vfd)^2}{2} \tag{37}$$

8.2.2.5 Input Capacitor

The TPS54260-EP requires a high-quality ceramic, type X5R or X7R, input decoupling capacitor of at least 3 μF of effective capacitance and in some applications a bulk capacitance. The effective capacitance includes any dc bias effects. The voltage rating of the input capacitor must be greater than the maximum input voltage. The capacitor must also have a ripple current rating greater than the maximum input current ripple of the TPS54260-EP. The input ripple current can be calculated using Equation 38.

The value of a ceramic capacitor varies significantly overtemperature and the amount of dc bias applied to the capacitor. The capacitance variations due to temperature can be minimized by selecting a dielectric material that is stable overtemperature. X5R and X7R ceramic dielectrics are usually selected for power regulator capacitors because they have a high capacitance to volume ratio and are fairly stable overtemperature. The output capacitor must also be selected with the dc bias taken into account. The capacitance value of a capacitor decreases as the dc bias across a capacitor increases.

For this example design, a ceramic capacitor with at least a 60 V voltage rating is required to support the maximum input voltage. Common standard ceramic capacitor voltage ratings include 4 V, 6.3 V, 10 V, 16 V, 25 V, 50 V or 100 V so a 100-V capacitor should be selected. For this example, two 2.2-μF, 100-V capacitors in parallel have been selected. Table 2 shows a selection of high-voltage capacitors. The input capacitance value determines the input ripple voltage of the regulator. The input voltage ripple can be calculated using Equation 39. Using the design example values, Ioutmax = 2.5 A, Cin = 4.4 μF, $f$sw = 300 kHz, yields an input voltage ripple of 206 mV and a rms input ripple current of 1.15 A.

$$\text{Icirms} = \text{Iout} \times \sqrt{\frac{\text{Vout}}{\text{Vin min}} \times \frac{(\text{Vin min} - \text{Vout})}{\text{Vin min}}} \tag{38}$$

$$\Delta\text{Vin} = \frac{\text{Iout max} \times 0.25}{\text{Cin} \times f\text{sw}} \tag{39}$$

Table 2. Capacitor Types

VENDOR	VALUE (μF)	EIA Size	VOLTAGE	DIALECTRIC	COMMENTS
Murata	1 to 2.2	1210	100 V	X7R	GRM32 series
	1 to 4.7		50 V		
	1	1206	100 V		GRM31 series
	1 to 2.2		50 V		
Vishay	1 10 1.8	2220	50 V		VJ X7R series
	1 to 1.2		100 V		
	1 to 3.9	2225	50 V		
	1 to 1.8		100 V		
TDK	1 to 2.2	1812	100 V		C series C4532
	1.5 to 6.8		50 V		
	1 to 2.2	1210	100 V		C series C3225
	1 to 3.3		50 V		
AVX	1 to 4.7	1210	50 V		X7R dielectric series
	1.0		100 V		
	1 to 4.7	1812	50 V		
	1 to 2.2		100 V		

8.2.2.6 Slow-Start Capacitor

The slow-start capacitor determines the minimum amount of time it takes for the output voltage to reach its nominal programmed value during power up. This is useful if a load requires a controlled voltage slew rate. This is also used if the output capacitance is large and would require large amounts of current to quickly charge the capacitor to the output voltage level. The large currents necessary to charge the capacitor may make the TPS54260-EP reach the current limit or excessive current draw from the input power supply may cause the input voltage rail to sag. Limiting the output voltage slew rate solves both of these problems.

Copyright © 2016–2017, Texas Instruments Incorporated

The slow-start time must be long enough to allow the regulator to charge the output capacitor up to the output voltage without drawing excessive current. Equation 40 can be used to find the minimum slow-start time, tss, necessary to charge the output capacitor, Cout, from 10% to 90% of the output voltage, Vout, with an average slow-start current of Issavg. In the example, to charge the effective output capacitance of 72.4 µF up to 3.3 V while only allowing the average output current to be 1 A would require a 0.19-ms slow-start time.

Once the slow-start time is known, the slow-start capacitor value can be calculated using Equation 6. For the example circuit, the slow-start time is not too critical because the output capacitor value is 2 × 47 µF which does not require much current to charge to 3.3 V. The example circuit has the slow-start time set to an arbitrary value of 3.5 ms which requires a 8.75-nF slow-start capacitor. For this design, the next larger standard value of 10 nF is used.

$$tss > \frac{Cout \times Vout \times 0.8}{Issavg} \tag{40}$$

8.2.2.7 Bootstrap Capacitor Selection

A 0.1-µF ceramic capacitor must be connected between the BOOT and PH pins for proper operation. TI recommends to use a ceramic capacitor with X5R or better grade dielectric. The capacitor should have a 10 V or higher voltage rating.

8.2.2.8 UVLO Set Point

The UVLO can be adjusted using an external voltage divider on the EN pin of the TPS54260-EP. The UVLO has two thresholds, one for power up when the input voltage is rising and one for power down or brown outs when the input voltage is falling. For the example design, the supply should turn on and start switching once the input voltage increases above 6 V (enabled). After the regulator starts switching, it should continue to do so until the input voltage falls below 5.5 V (UVLO stop).

The programmable UVLO and enable voltages are set using the resistor divider of R1 and R2 between Vin and ground to the EN pin. Equation 2 through Equation 3 can be used to calculate the resistance values necessary. For the example application, a 124 kΩ between Vin and EN (R1) and a 30.1 kΩ between EN and ground (R2) are required to produce the 6-V and 5.5-V start and stop voltages.

8.2.2.9 Output Voltage and Feedback Resistors Selection

The voltage divider of R5 and R6 is used to set the output voltage. For the example design, 10 kΩ was selected for R6. Using Equation 1, R5 is calculated as 31.25 kΩ. The nearest standard 1% resistor is 31.6 kΩ. Due to current leakage of the VSENSE pin, the current flowing through the feedback network should be greater than 1 µA in order to maintain the output voltage accuracy. This requirement makes the maximum value of R2 equal to 800 kΩ. Choosing higher resistor values decrease quiescent current and improve efficiency at low output currents but may introduce noise immunity problems.

8.2.2.10 Compensation

There are several methods used to compensate dc/dc regulators. The method presented here is easy to calculate and ignores the effects of the slope compensation that is internal to the device. Because the slope compensation is ignored, the actual cross over frequency is usually lower than the cross over frequency used in the calculations. This method assumes the crossover frequency is between the modulator pole and the ESR zero and the ESR zero is at least 10 times greater the modulator pole. Use SwitcherPro software for a more accurate design.

To get started, the modulator pole, fpmod, and the ESR zero, fz1 must be calculated using Equation 41 and Equation 42. For Cout, use a derated value of 40 µF. Use equations Equation 43 and Equation 44, to estimate a starting point for the crossover frequency, $f$co, to design the compensation. For the example design, $f$pmod is 1206 Hz and fzmod is 530.5 kHz. Equation 43 is the geometric mean of the modulator pole and the ESR zero and Equation 44 is the mean of modulator pole and the switching frequency. Equation 43 yields 25.3 kHz and Equation 44 gives 13.4 kHz. Use the lower value of Equation 43 or Equation 44 for an initial crossover frequency. For this example, a higher fco is desired to improve transient response. the target fco is 35 kHz. Next, the compensation components are calculated. A resistor in series with a capacitor is used to create a compensating zero. A capacitor in parallel to these two components forms the compensating pole.

$$fp\ mod = \frac{Ioutmax}{2 \times \pi \times Vout \times Cout} \tag{41}$$

$$fz\,mod = \frac{1}{2 \times \pi \times Resr \times Cout} \tag{42}$$

$$f_{co} = \sqrt{f_p mod \times f_z mod} \tag{43}$$

$$f_{co} = \sqrt{f_p mod \times \frac{f_{sw}}{2}} \tag{44}$$

To determine the compensation resistor, R4, use Equation 45. Assume the power stage transconductance, gmps, is 10.5 A/V. The output voltage, Vo, reference voltage, VREF, and amplifier transconductance, gmea, are 3.3 V, 0.8 V and 310 μA/V, respectively. R4 is calculated to be 20.2 kΩ, use the nearest standard value of 20 kΩ. Use Equation 46 to set the compensation zero to the modulator pole frequency. Equation 46 yields 4740 pF for compensating capacitor C5, a 4700 pF is used for this design.

$$R4 = \left(\frac{2 \times \pi \times f_{co} \times C_{out}}{gmps}\right) \times \left(\frac{V_{out}}{V_{ref} \times gmea}\right) \tag{45}$$

$$C5 = \frac{1}{2 \times \pi \times R4 \times f_p mod} \tag{46}$$

A compensation pole can be implemented if desired using an additional capacitor C8 in parallel with the series combination of R4 and C5. Use the larger value of Equation 47 and Equation 48 to calculate the C8, to set the compensation pole. C8 is not used for this design example.

$$C8 = \frac{C_o \times Resr}{R4} \tag{47}$$

$$C8 = \frac{1}{R4 \times f_{sw} \times \pi} \tag{48}$$

8.2.2.11 Discontinuous Mode and Eco-mode Control Scheme Boundary

With an input voltage of 12 V, the power supply enters discontinuous mode when the output current is less than 337 mA. The power supply enters Eco-mode control scheme when the output current is lower than 5 mA.

The input current draw at no load is 392 μA.

8.2.2.12 Power Dissipation

The following formulas show how to estimate the IC power dissipation under continuous conduction mode (CCM) operation. These equations should not be used if the device is working in discontinuous conduction mode (DCM).

The power dissipation of the IC includes conduction loss (Pcon), switching loss (Psw), gate drive loss (Pgd) and supply current (Pq).

$$Pcon = Io^2 \times R_{DS(on)} \times \frac{Vout}{Vin} \tag{49}$$

$$Psw = Vin^2 \times fsw \times Io \times 0.25 \times 10^{-9} \tag{50}$$

$$Pgd = Vin \times 3 \times 10^{-9} \times fsw \tag{51}$$

$$Pq = 116 \times 10^{-6} \times Vin$$

Where:

- IOUT is the output current (A)
- $R_{DS(on)}$ is the on resistance of the high-side MOSFET (Ω)
- VOUT is the output voltage (V)
- VIN is the input voltage (V)
- $f$sw is the switching frequency (Hz) (52)

So

$$Ptot = Pcon + Psw + Pgd + Pq \tag{53}$$

Copyright © 2016–2017, Texas Instruments Incorporated

For given T_A,

$$T_J = T_A + Rth \times Ptot \tag{54}$$

For given T_{JMAX} = 150°C

$$T_{Amax} = T_{Jmax} - Rth \times Ptot$$

where

- Ptot is the total device power dissipation (W)
- T_A is the ambient temperature (°C)
- T_J is the junction temperature (°C)
- Rth is the junction-to-ambient thermal resistance of the IC on the PCB layout (°C/W)
- T_{JMAX} is maximum junction temperature (°C)
- T_{AMAX} is maximum ambient temperature (°C) (55)

There are additional power losses in the regulator circuit due to the inductor ac and dc losses, the catch diode and trace resistance that impact the overall efficiency of the regulator.

Copyright © 2016–2017, Texas Instruments Incorporated

8.2.3 Application Curves

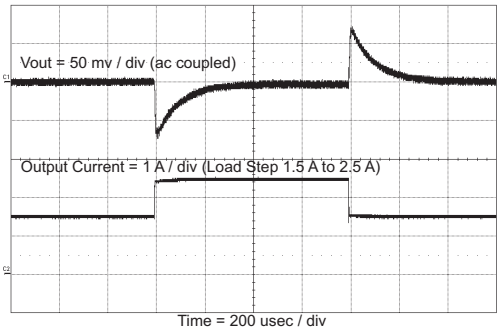

Figure 47. Load Transient

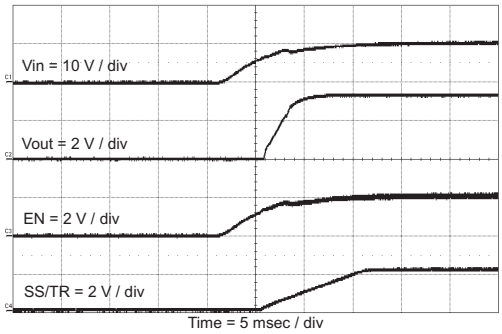

Figure 48. Startup With VIN

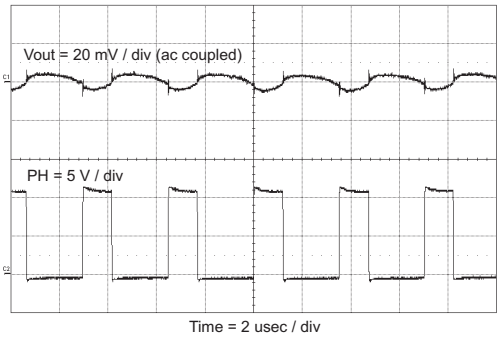

Figure 49. Output Ripple, CCM

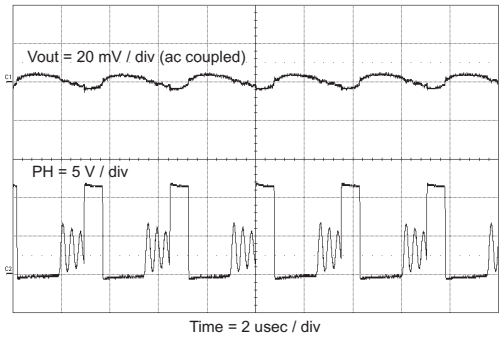

Figure 50. Output Ripple, DCM

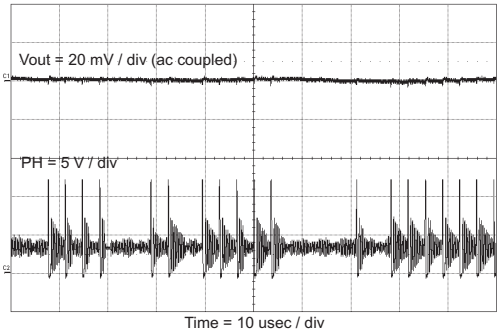

Figure 51. Output Ripple, PSM

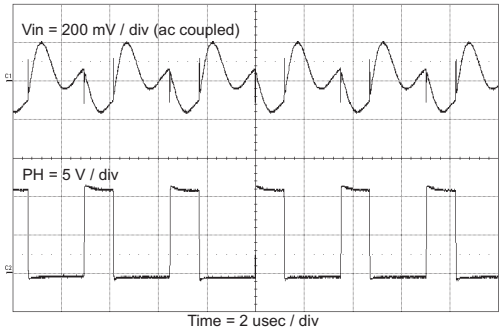

Figure 52. Input Ripple, CCM

Copyright © 2016–2017, Texas Instruments Incorporated

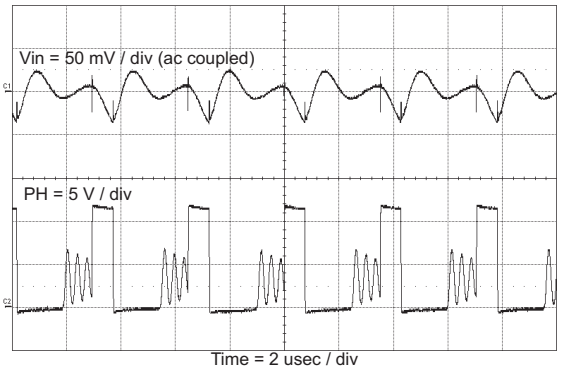

Figure 53. Input Ripple, DCM

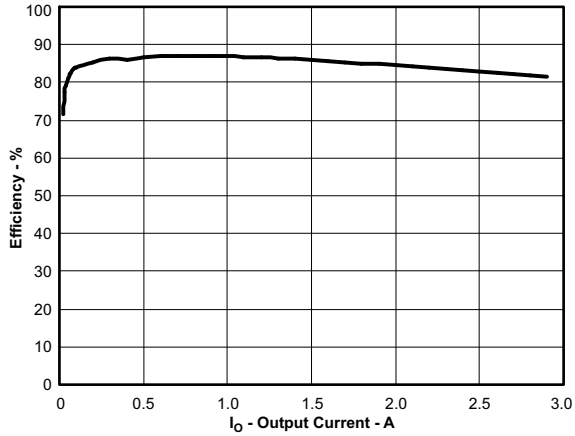

VIN = 12 V VOUT = 3.3 V ƒsw = 300 kHz

Figure 54. Efficiency vs Load Current

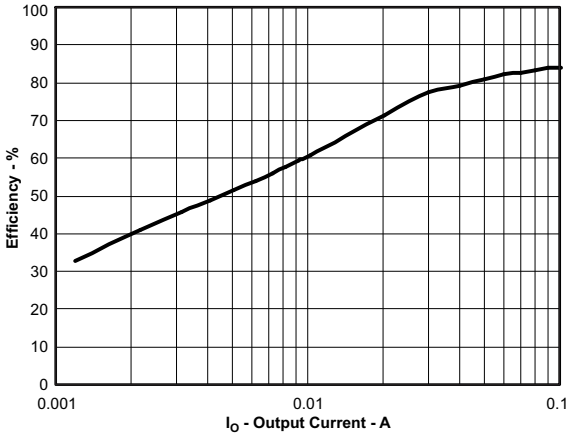

VIN = 12 V VOUT = 3.3 V ƒsw = 300 kHz

Figure 55. Light-Load Efficiency

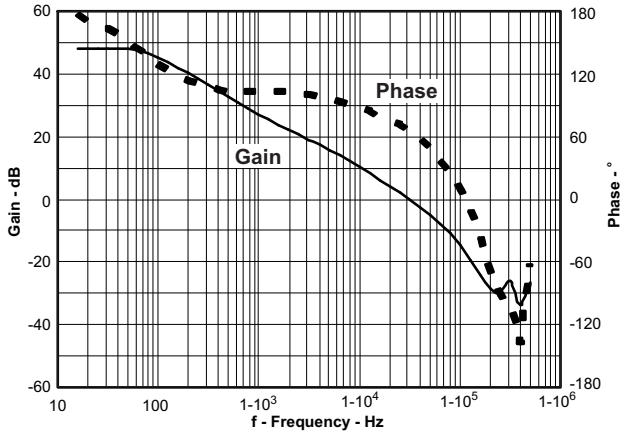

VIN = 12 V VOUT = 3.3 V IOUT = 2.5 A

Figure 56. Overall Loop Frequency Response

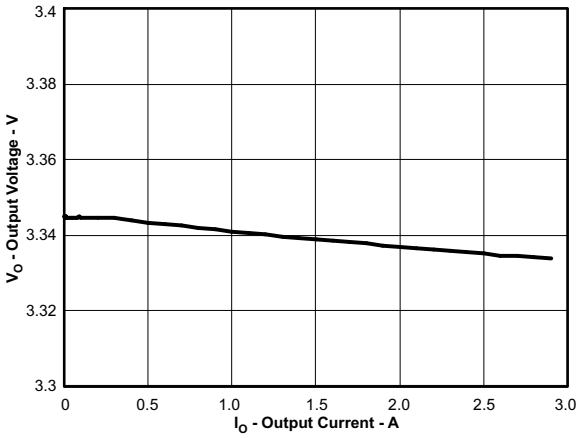

VIN = 12 V VOUT = 3.3 V ƒsw = 300 kHz

Figure 57. Regulation vs Load Current

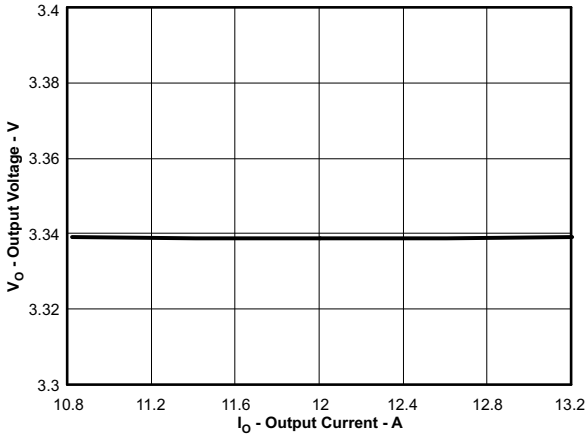

VIN = 12 V VOUT = 3.3 V ƒsw = 300 kHz
IOUT = 2.5 A

Figure 58. Regulation vs Input Voltage

9 Power Supply Recommendations

The input decoupling capacitors and bootstrap capacitor must be located as close as possible to the TPS54260-EP. In addition, the voltage set-point resistor divider components must also be kept close to the IC. The voltage divider network ties the output voltage to the point of regulation, the copper V_{OUT} trace past the output capacitors. Ensure that input power supply is clean. TI recommends adding an additional input bulk capacitor depending on the board connection to the input supply.

10 Layout

10.1 Layout Guidelines

Layout is a critical portion of good power supply design. There are several signals paths that conduct fast changing currents or voltages that can interact with stray inductance or parasitic capacitance to generate noise or degrade the power supplies performance. To help eliminate these problems, the VIN pin should be bypassed to ground with a low ESR ceramic bypass capacitor with X5R or X7R dielectric. Care should be taken to minimize the loop area formed by the bypass capacitor connections, the VIN pin, and the anode of the catch diode. See Figure 59 for a PCB layout example. The GND pin should be tied directly to the power pad under the IC and the power pad.

The power pad should be connected to any internal PCB ground planes using multiple vias directly under the IC. The PH pin should be routed to the cathode of the catch diode and to the output inductor. Because the PH connection is the switching node, the catch diode and output inductor should be located close to the PH pins, and the area of the PCB conductor minimized to prevent excessive capacitive coupling. For operation at full rated load, the top side ground area must provide adequate heat dissipating area. The RT/CLK pin is sensitive to noise so the RT resistor should be located as close as possible to the IC and routed with minimal lengths of trace. The additional external components can be placed approximately as shown. It may be possible to obtain acceptable performance with alternate PCB layouts, however this layout has been shown to produce good results and is meant as a guideline.

10.1.1 Estimated Circuit Area

The estimated printed circuit board area for the components used in the design of Figure 46 is 0.55 in^2. This area does not include test points or connectors.

Copyright © 2016–2017, Texas Instruments Incorporated

10.2 Layout Example

This layout example is shown for the HVSSOP (DGQ) package. The VSON (DRC) package can also use this layout example because the pin assignments on the VSON package are the same as the HVSSOP package.

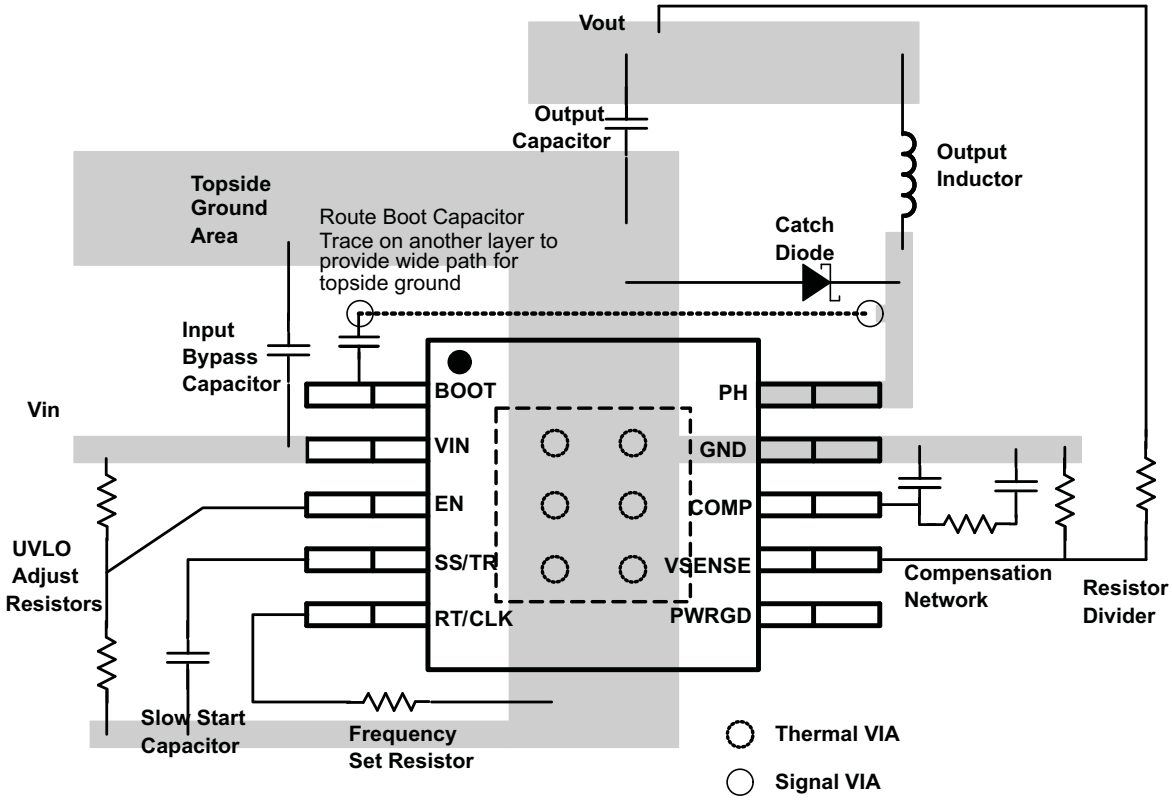

Figure 59. PCB Layout Example

11 器件和文档支持

11.1 接收文档更新通知

要接收文档更新通知，请导航至德州仪器 TI.com.cn 上的器件产品文件夹。请单击右上角的*通知我* 进行注册，即可收到任意产品信息更改每周摘要。有关更改的详细信息，请查看任意已修订文档中包含的修订历史记录。

11.2 社区资源

下列链接提供到 TI 社区资源的连接。链接的内容由各个分销商"按照原样"提供。这些内容并不构成 TI 技术规范，并且不一定反映 TI 的观点；请参阅 TI 的 《使用条款》。

TI E2E™ 在线社区 ***TI 的工程师对工程师 (E2E) 社区。***此社区的创建目的在于促进工程师之间的协作。在 e2e.ti.com 中，您可以咨询问题、分享知识、拓展思路并与同行工程师一道帮助解决问题。

设计支持 ***TI 参考设计支持*** 可帮助您快速查找有帮助的 E2E 论坛、设计支持工具以及技术支持的联系信息。

11.3 商标

Eco-mode, E2E are trademarks of Texas Instruments.
WEBENCH is a registered trademark of Texas Instruments.
All other trademarks are the property of their respective owners.

11.4 静电放电警告

ESD 可能会损坏该集成电路。德州仪器 (TI) 建议通过适当的预防措施处理所有集成电路。如果不遵守正确的处理措施和安装程序，可能会损坏集成电路。

ESD 的损坏小至导致微小的性能降级，大至整个器件故障。 精密的集成电路可能更容易受到损坏，这是因为非常细微的参数更改都可能会导致器件与其发布的规格不相符。

11.5 Glossary

SLYZ022 — *TI Glossary*.

This glossary lists and explains terms, acronyms, and definitions.

版权 © 2016–2017, Texas Instruments Incorporated

12 机械、封装和可订购信息

以下页面包括机械、封装和可订购信息。这些信息是指定器件的最新可用数据。这些数据发生变化时，我们可能不会另行通知或修订此文档。如欲获取此产品说明书的浏览器版本，请参阅左侧的导航栏。

PACKAGING INFORMATION

Orderable Device	Status (1)	Package Type	Package Drawing	Pins	Package Qty	Eco Plan (2)	Lead finish/ Ball material (6)	MSL Peak Temp (3)	Op Temp (°C)	Device Marking (4/5)	Samples
TPS54260MDGQTEP	ACTIVE	HVSSOP	DGQ	10	250	RoHS & Green	NIPDAUAG	Level-3-260C-168 HR	-55 to 125	5426M	Samples
TPS54260MDRCTEP	ACTIVE	VSON	DRC	10	250	RoHS & Green	NIPDAU	Level-3-260C-168 HR	-55 to 125	5426M	Samples
V62/16624-01XE	ACTIVE	HVSSOP	DGQ	10	250	RoHS & Green	NIPDAUAG	Level-3-260C-168 HR	-55 to 125	5426M	Samples
V62/16624-01YE	ACTIVE	VSON	DRC	10	250	RoHS & Green	NIPDAU	Level-3-260C-168 HR	-55 to 125	5426M	Samples

(1) The marketing status values are defined as follows:
ACTIVE: Product device recommended for new designs.
LIFEBUY: TI has announced that the device will be discontinued, and a lifetime-buy period is in effect.
NRND: Not recommended for new designs. Device is in production to support existing customers, but TI does not recommend using this part in a new design.
PREVIEW: Device has been announced but is not in production. Samples may or may not be available.
OBSOLETE: TI has discontinued the production of the device.

(2) **RoHS:** TI defines "RoHS" to mean semiconductor products that are compliant with the current EU RoHS requirements for all 10 RoHS substances, including the requirement that RoHS substance do not exceed 0.1% by weight in homogeneous materials. Where designed to be soldered at high temperatures, "RoHS" products are suitable for use in specified lead-free processes. TI may reference these types of products as "Pb-Free".
RoHS Exempt: TI defines "RoHS Exempt" to mean products that contain lead but are compliant with EU RoHS pursuant to a specific EU RoHS exemption.
Green: TI defines "Green" to mean the content of Chlorine (Cl) and Bromine (Br) based flame retardants meet JS709B low halogen requirements of <=1000ppm threshold. Antimony trioxide based flame retardants must also meet the <=1000ppm threshold requirement.

(3) MSL, Peak Temp. - The Moisture Sensitivity Level rating according to the JEDEC industry standard classifications, and peak solder temperature.

(4) There may be additional marking, which relates to the logo, the lot trace code information, or the environmental category on the device.

(5) Multiple Device Markings will be inside parentheses. Only one Device Marking contained in parentheses and separated by a "~" will appear on a device. If a line is indented then it is a continuation of the previous line and the two combined represent the entire Device Marking for that device.

(6) Lead finish/Ball material - Orderable Devices may have multiple material finish options. Finish options are separated by a vertical ruled line. Lead finish/Ball material values may wrap to two lines if the finish value exceeds the maximum column width.

Important Information and Disclaimer: The information provided on this page represents TI's knowledge and belief as of the date that it is provided. TI bases its knowledge and belief on information provided by third parties, and makes no representation or warranty as to the accuracy of such information. Efforts are underway to better integrate information from third parties. TI has taken and

continues to take reasonable steps to provide representative and accurate information but may not have conducted destructive testing or chemical analysis on incoming materials and chemicals.
TI and TI suppliers consider certain information to be proprietary, and thus CAS numbers and other limited information may not be available for release.

In no event shall TI's liability arising out of such information exceed the total purchase price of the TI part(s) at issue in this document sold by TI to Customer on an annual basis.

GENERIC PACKAGE VIEW

DRC 10

VSON - 1 mm max height

3 x 3, 0.5 mm pitch

PLASTIC SMALL OUTLINE - NO LEAD

This image is a representation of the package family, actual package may vary.
Refer to the product data sheet for package details.

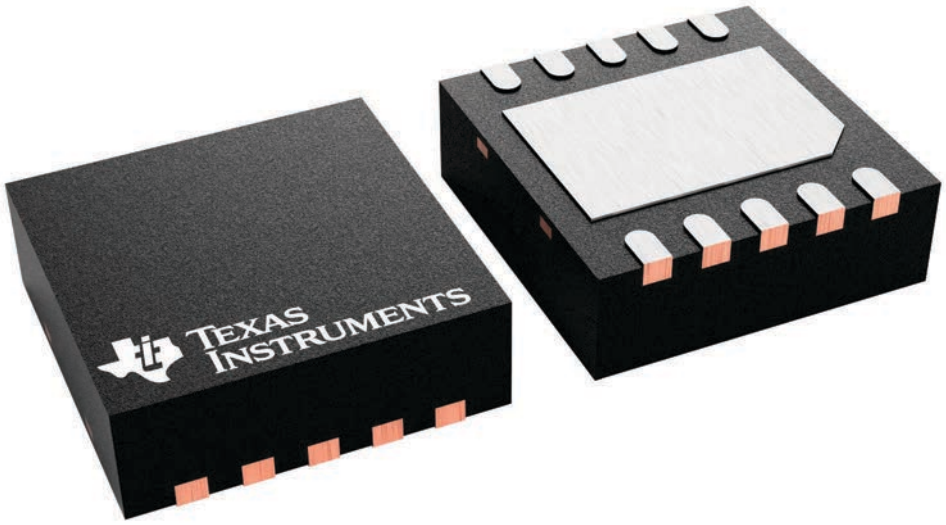

4226193/A

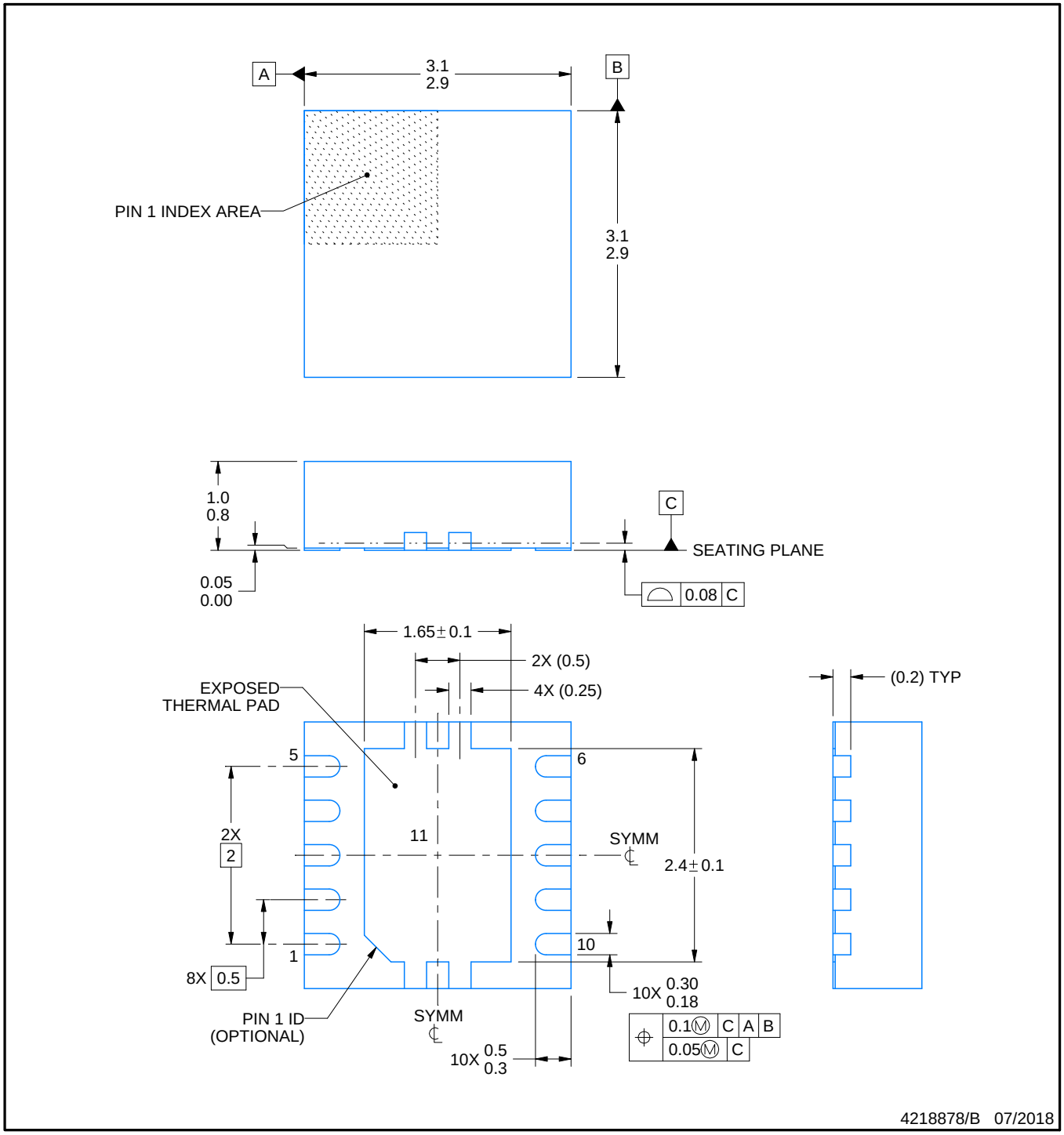

NOTES:

1. All linear dimensions are in millimeters. Any dimensions in parenthesis are for reference only. Dimensioning and tolerancing per ASME Y14.5M.
2. This drawing is subject to change without notice.
3. The package thermal pad must be soldered to the printed circuit board for optimal thermal and mechanical performance.

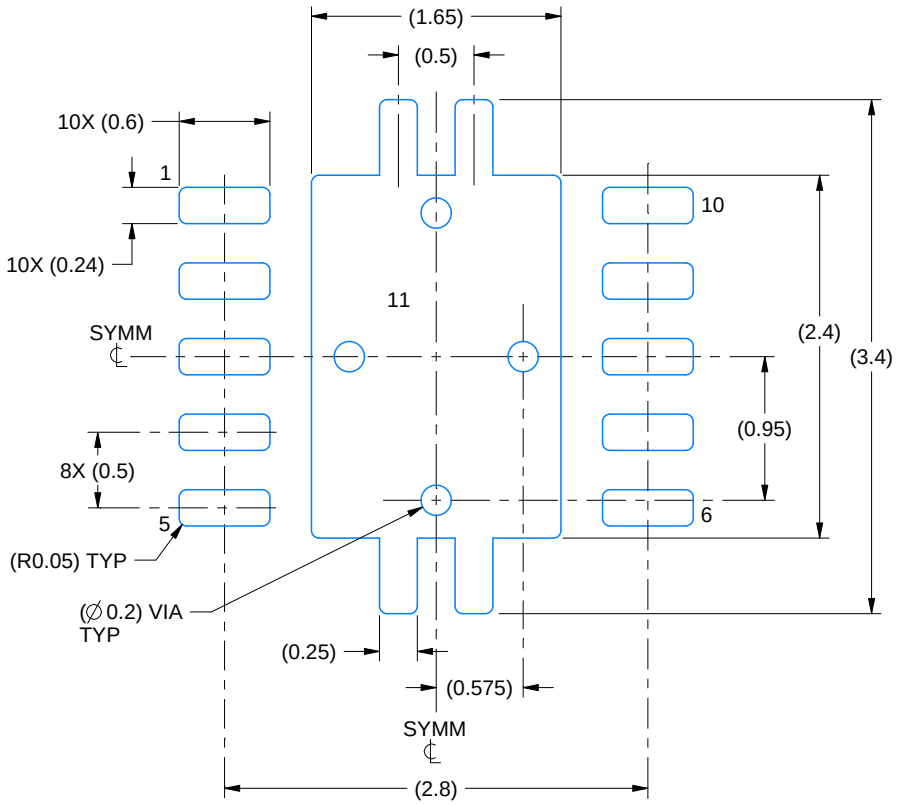

LAND PATTERN EXAMPLE
EXPOSED METAL SHOWN
SCALE:20X

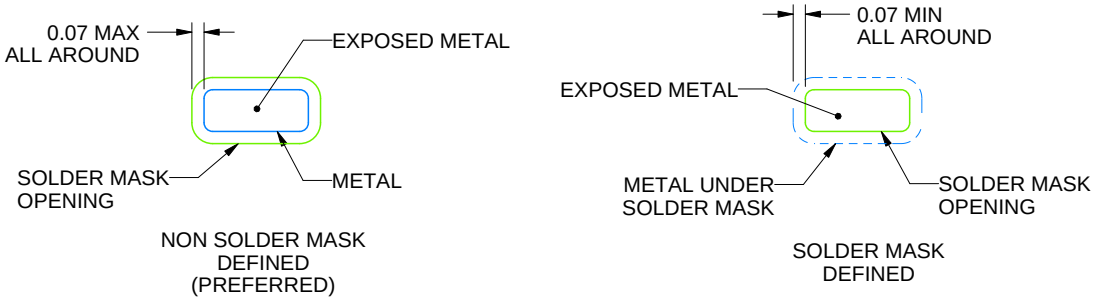

SOLDER MASK DETAILS

4218878/B 07/2018

NOTES: (continued)

4. This package is designed to be soldered to a thermal pad on the board. For more information, see Texas Instruments literature number SLUA271 (www.ti.com/lit/slua271).
5. Vias are optional depending on application, refer to device data sheet. If any vias are implemented, refer to their locations shown on this view. It is recommended that vias under paste be filled, plugged or tented.

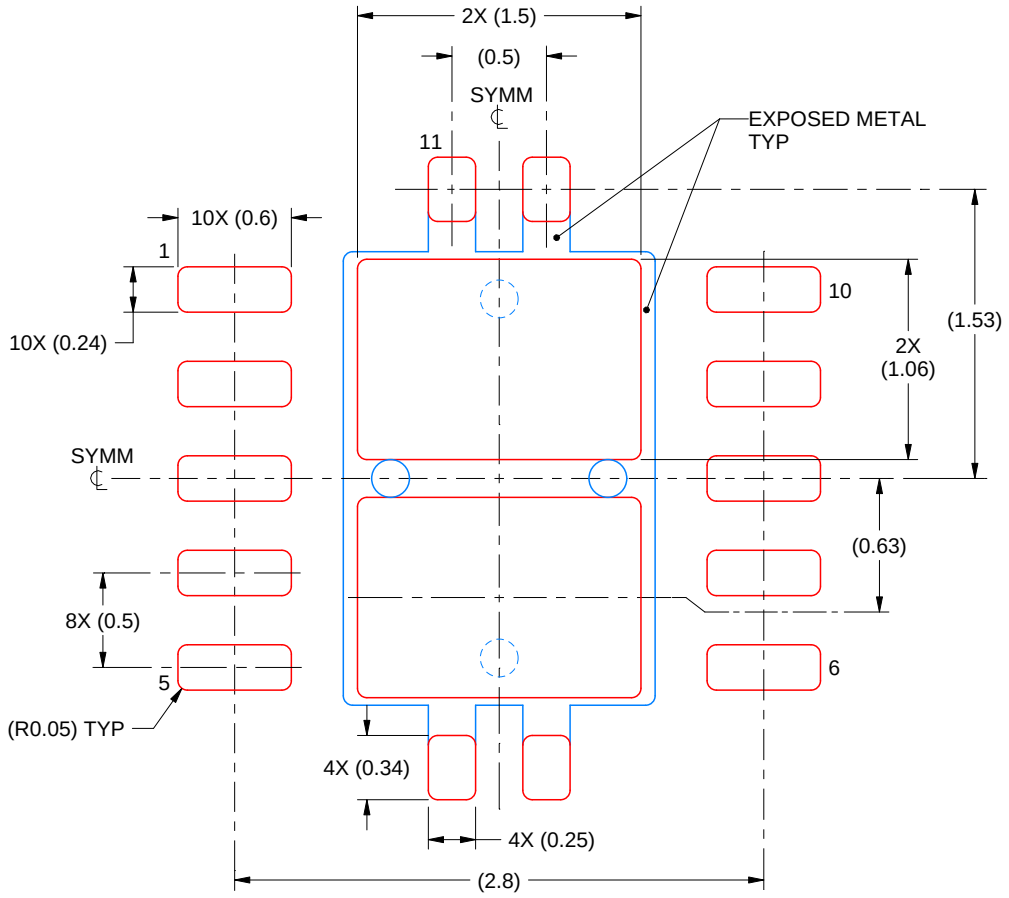

SOLDER PASTE EXAMPLE
BASED ON 0.125 mm THICK STENCIL

EXPOSED PAD 11:
80% PRINTED SOLDER COVERAGE BY AREA
SCALE:25X

4218878/B 07/2018

NOTES: (continued)

6. Laser cutting apertures with trapezoidal walls and rounded corners may offer better paste release. IPC-7525 may have alternate design recommendations.

GENERIC PACKAGE VIEW

DGQ 10

PowerPAD™ HVSSOP - 1.1 mm max height

3 x 3, 0.5 mm pitch

PLASTIC SMALL OUTLINE

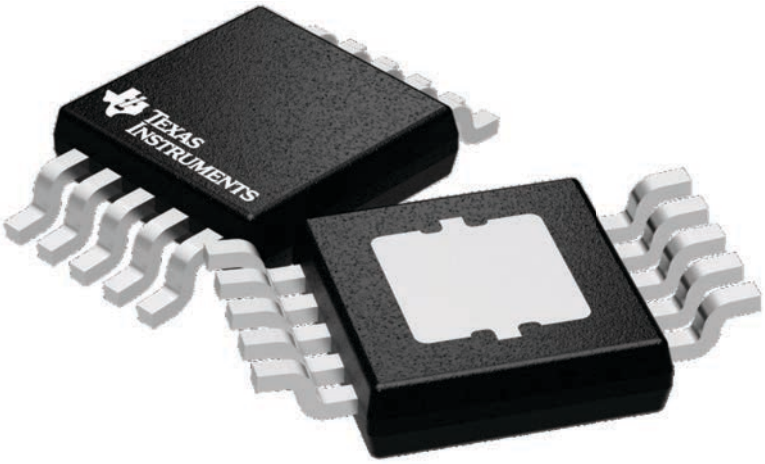

Images above are just a representation of the package family, actual package may vary.
Refer to the product data sheet for package details.

4224775/A

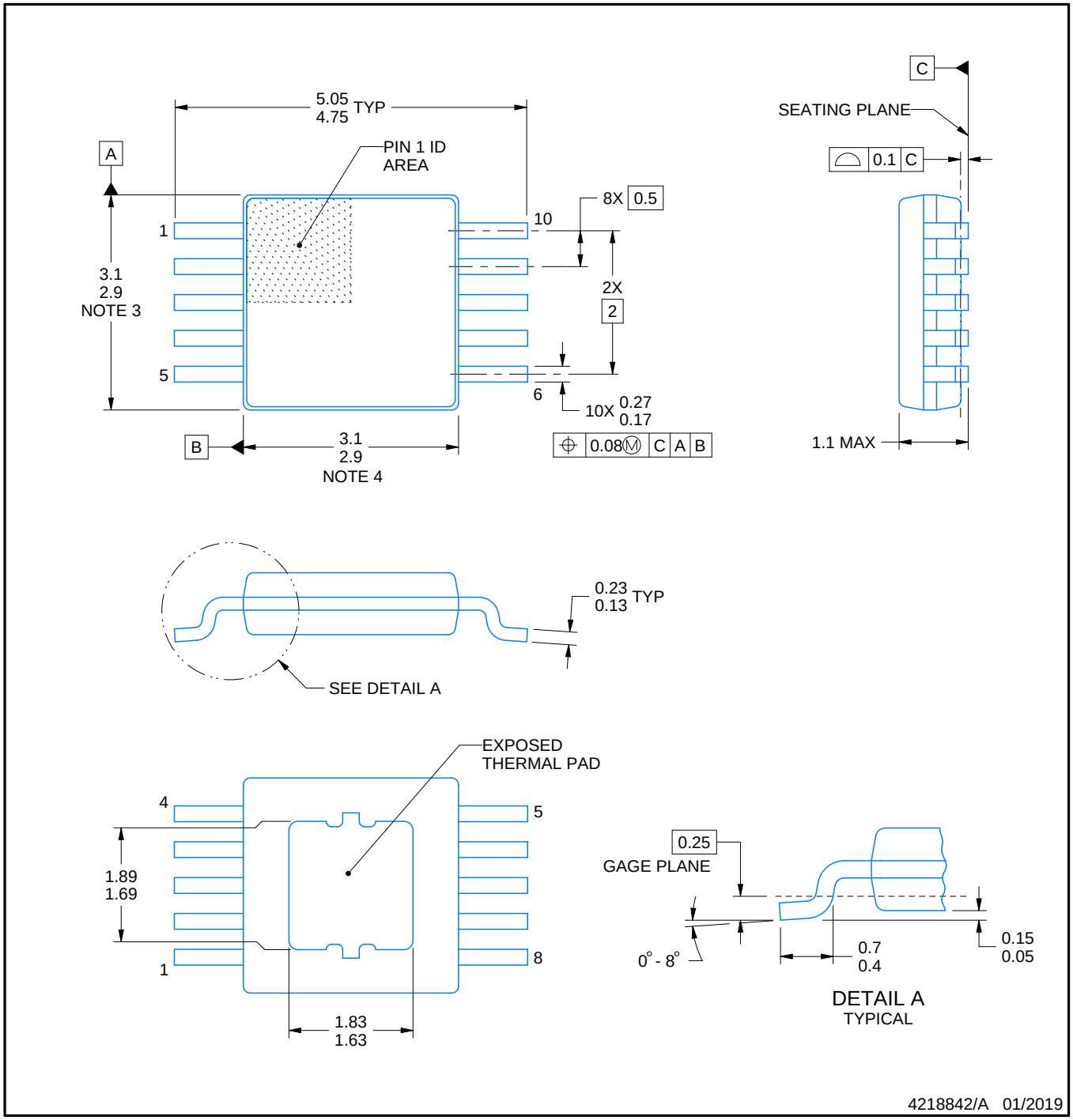

PowerPAD is a trademark of Texas Instruments.

NOTES:

1. All linear dimensions are in millimeters. Any dimensions in parenthesis are for reference only. Dimensioning and tolerancing per ASME Y14.5M.
2. This drawing is subject to change without notice.
3. This dimension does not include mold flash, protrusions, or gate burrs. Mold flash, protrusions, or gate burrs shall not exceed 0.15 mm per side.
4. This dimension does not include interlead flash. Interlead flash shall not exceed 0.25 mm per side.
5. Reference JEDEC registration MO-187, variation BA-T.

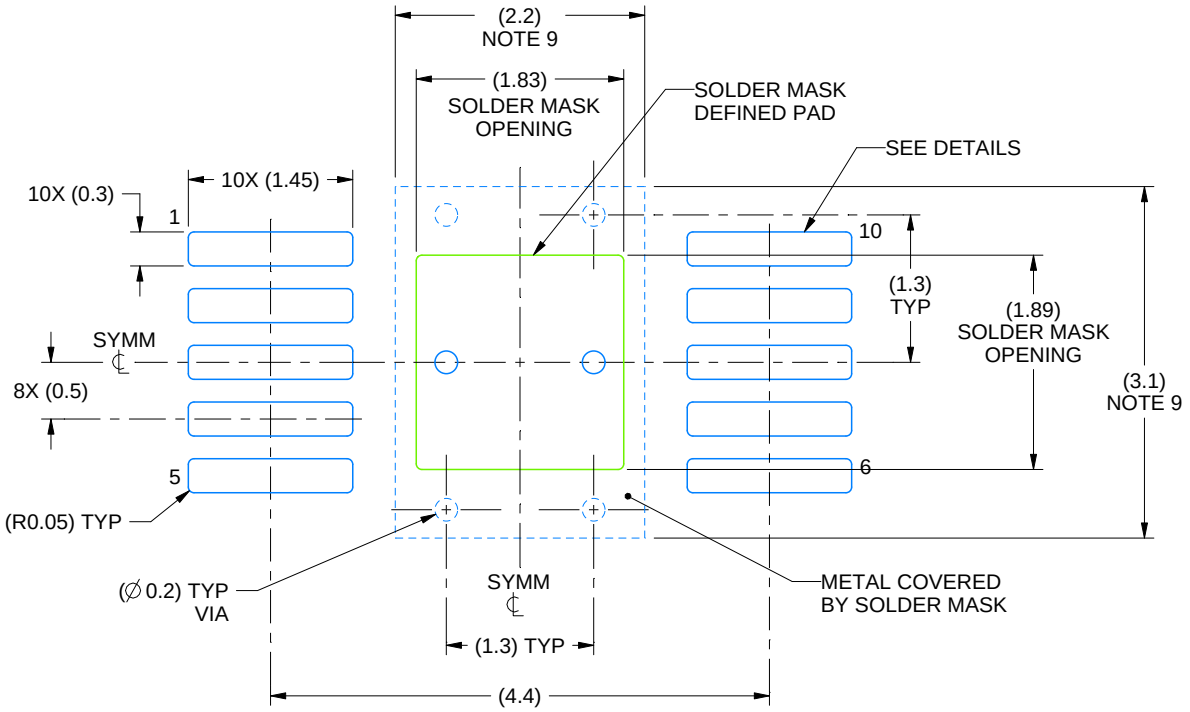

LAND PATTERN EXAMPLE
SCALE:15X

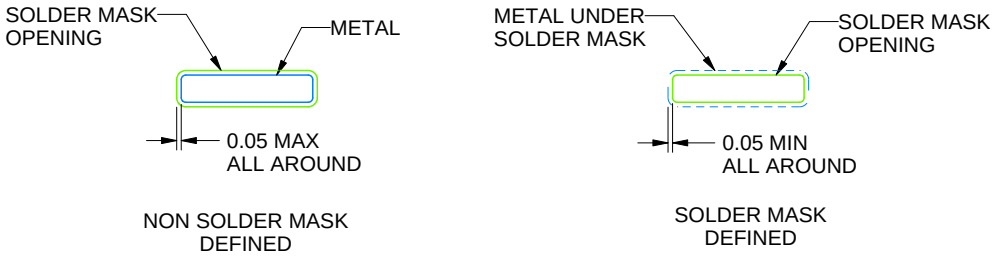

SOLDER MASK DETAILS

4218842/A 01/2019

NOTES: (continued)

6. Publication IPC-7351 may have alternate designs.
7. Solder mask tolerances between and around signal pads can vary based on board fabrication site.
8. This package is designed to be soldered to a thermal pad on the board. For more information, see Texas Instruments literature numbers SLMA002 (www.ti.com/lit/slma002) and SLMA004 (www.ti.com/lit/slma004).
9. Size of metal pad may vary due to creepage requirement.

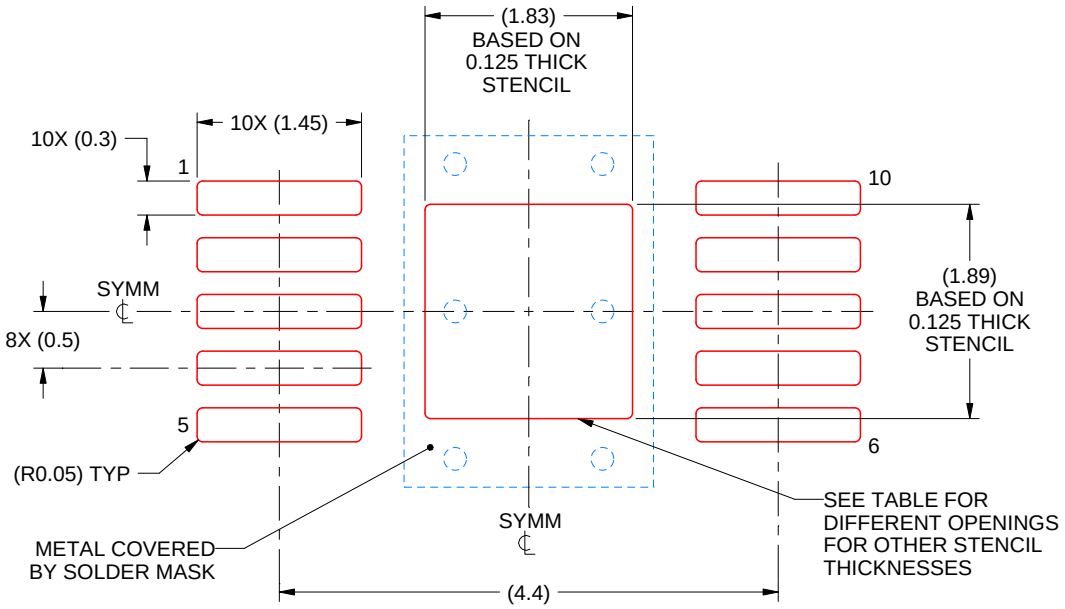

SOLDER PASTE EXAMPLE
EXPOSED PAD
100% PRINTED SOLDER COVERAGE BY AREA
SCALE:15X

STENCIL THICKNESS	SOLDER STENCIL OPENING
0.1	2.05 X 2.11
0.125	1.83 X 1.89 (SHOWN)
0.150	1.67 X 1.73
0.175	1.55 X 1.60

4218842/A 01/2019

NOTES: (continued)

10. Laser cutting apertures with trapezoidal walls and rounded corners may offer better paste release. IPC-7525 may have alternate design recommendations.
11. Board assembly site may have different recommendations for stencil design.

重要声明和免责声明

TI 提供技术和可靠性数据（包括数据表）、设计资源（包括参考设计）、应用或其他设计建议、网络工具、安全信息和其他资源，不保证没有瑕疵且不做出任何明示或暗示的担保，包括但不限于对适销性、某特定用途方面的适用性或不侵犯任何第三方知识产权的暗示担保。

这些资源可供使用 TI 产品进行设计的熟练开发人员使用。您将自行承担以下全部责任：(1) 针对您的应用选择合适的 TI 产品，(2) 设计、验证并测试您的应用，(3) 确保您的应用满足相应标准以及任何其他安全、安保或其他要求。这些资源如有变更，恕不另行通知。TI 授权您仅可将这些资源用于研发本资源所述的 TI 产品的应用。严禁对这些资源进行其他复制或展示。您无权使用任何其他 TI 知识产权或任何第三方知识产权。您应全额赔偿因在这些资源的使用中对 TI 及其代表造成的任何索赔、损害、成本、损失和债务，TI 对此概不负责。

TI 提供的产品受 TI 的销售条款 (https:www.ti.com.cn/zh-cn/legal/termsofsale.html) 或 ti.com.cn 上其他适用条款/TI 产品随附的其他适用条款的约束。TI 提供这些资源并不会扩展或以其他方式更改 TI 针对 TI 产品发布的适用的担保或担保免责声明。

邮寄地址：上海市浦东新区世纪大道 1568 号中建大厦 32 楼，邮政编码：200122
Copyright © 2021 德州仪器半导体技术（上海）有限公司