TPS6122x Low Input Voltage, 0.7V Boost Converter With 5.5µA Quiescent Current

1 Features

- Up to 95% Efficiency at Typical Operating Conditions
- 5.5 µA Quiescent Current
- Startup Into Load at 0.7 V Input Voltage
- Operating Input Voltage from 0.7 V to 5.5 V
- Pass-Through Function during Shutdown
- Minimum Switching Current 200 mA
- Protections:
  - Output Overvoltage
  - Overtemperature
  - Input Undervoltage Lockout
- Adjustable Output Voltage from 1.8 V to 6 V
- Fixed Output Voltage Versions
- Small 6-pin SC-70 Package

2 Applications

- Battery Powered Applications
  - 1 to 3 Cell Alkaline, NiCd or NiMH
  - 1 cell Li-Ion or Li-Primary
- Solar or Fuel Cell Powered Applications
- Consumer and Portable Medical Products
- Personal Care Products
- White or Status LEDs
- Smartphones

3 Description

The TPS6122x family devices provide a power-supply solution for products powered by either a single-cell, two-cell, or three-cell alkaline, NiCd or NiMH, or one-cell Li-Ion or Li-polymer battery. Possible output currents depend on the input-to-output voltage ratio. The boost converter is based on a hysteretic controller topology using synchronous rectification to obtain maximum efficiency at minimal quiescent currents. The output voltage of the adjustable version can be programmed by an external resistor divider, or is set internally to a fixed output voltage. The converter can be switched off by a featured enable pin. While being switched off, battery drain is minimized. The device is offered in a 6-pin SC-70 package (DCK) measuring 2 mm x 2 mm to enable small circuit layout size.

Device Information(1)

PART NUMBER	PACKAGE	BODY SIZE (NOM)
TPS61220	SC-70 (6)	2.00mm x 1.25mm
TPS61221		
TPS61222		

(1) For all available packages, see the orderable addendum at the end of this document.

4 Simplified Schematic

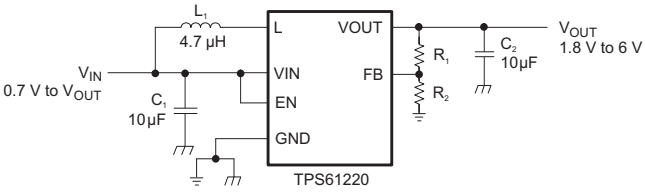

Efficiency vs Output Current and Input Voltage (V_{OUT} = 3.3V)

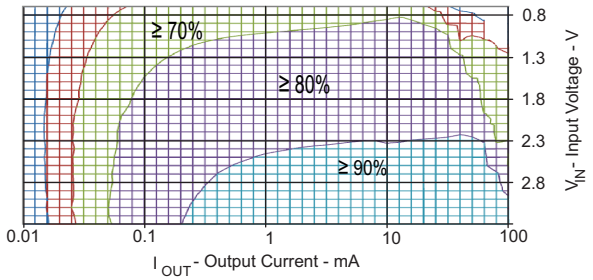

An IMPORTANT NOTICE at the end of this data sheet addresses availability, warranty, changes, use in safety-critical applications, intellectual property matters and other important disclaimers. PRODUCTION DATA.

Table of Contents

1 Features ... 1
2 Applications ... 1
3 Description ... 1
4 Simplified Schematic ... 1
5 Revision History ... 2
6 Device Comparison ... 3
7 Pin Configuration and Functions ... 3
8 Specifications ... 3
8.1 Absolute Maximum Ratings ... 3
8.2 Handling Ratings ... 3
8.3 Recommended Operating Conditions ... 4
8.4 Thermal Information ... 4
8.5 Electrical Characteristics ... 4
8.6 Typical Characteristics ... 5
9 Parameter Measurement Information ... 10
10 Detailed Description ... 11
10.1 Overview ... 11
10.2 Functional Block Diagrams ... 11
10.3 Feature Description ... 11
10.4 Device Functional Modes ... 12
11 Applications and Implementation ... 13
11.1 Application Information ... 13
11.2 Typical Applications ... 13
12 Power Supply Recommendations ... 17
12.1 Typical Power Sources ... 17
12.2 Input Voltage Effects On Output Current and Efficiency ... 17
12.3 Behavior While Disabled ... 17
12.4 Startup ... 17
13 Layout ... 18
13.1 Layout Guidelines ... 18
13.2 Layout Example ... 18
13.3 Thermal Considerations ... 18
14 Device and Documentation Support ... 19
14.1 Device Support ... 19
14.2 Documentation Support ... 19
14.3 Related Links ... 19
14.4 Trademarks ... 19
14.5 Electrostatic Discharge Caution ... 19
14.6 Glossary ... 19
15 Mechanical, Packaging, and Orderable Information ... 20

5 Revision History

NOTE: Page numbers for previous revisions may differ from page numbers in the current version.

Changes from Revision A (April 2014) to Revision B	Page
• Changed format of Handling Ratings table.	3
• Added new note to *Application and Implementation* section.	13
• Renamed "Thermal Information" section to "Thermal Considerations" section.	18

Changes from Original (August 2009) to Revision A	Page
• Updated data sheet format	1
• Changed the data sheet title From: LOW INPUT VOLTAGE STEP-UP CONVERTER IN 6 PIN SC-70 PACKAGE To: TPS6122x LOW INPUT VOLTAGE, 0.7V BOOST CONVERTER WITH 5.5µA QUIESCENT CURRENT	1
• Changed Feature bullet and Simplified Schematic text from "....1.8 V to 5.5 V" to "....1.8 V to 6 V"	1
• Deleted "machine model" ESD rating because JEDEC discontinued its use in 2012.	3
• Changed Overvoltage protect threshold min and V_{OUT} max levels from 5.5V to 6V	4
• Changed Adjustable output voltage version description text string from "....voltage is 5.5 V" to "....voltage is 6.0 V"	16
• Changed Layout diagram to correct typo in resistor numbers.	18

Copyright © 2009–2014, Texas Instruments Incorporated

6 Device Comparison (1)

T_A	OUTPUT VOLTAGE DC/DC	PACKAGE MARKING	PACKAGE(1)	PART NUMBER(2)
–40°C to 85°C	Adjustable	CKR	6-pin SC-70	TPS61220DCK
	3.3 V	CKS		TPS61221DCK
	5.0 V	CKT		TPS61222DCK

(1) Contact the factory to check availability of other fixed output voltage versions.
(1) For the most current package and ordering information, see the Package Option Addendum at the end of this document, or see the TI website at www.ti.com.
(2) The DCK package is available taped and reeled. Add R suffix to device type (e.g., TPS61220DCKR) to order quantities of 3000 devices per reel. It is also available in minireels. Add a T suffix to the device type (i.e. TPS61220DCKT) to order quantities of 250 devices per reel.

7 Pin Configuration and Functions

DCK PACKAGE
(TOP VIEW)

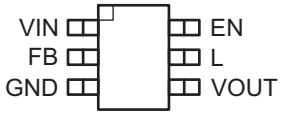

Pin Functions

PIN NAME	PIN NO.	I/O	DESCRIPTION
EN	6	I	Enable input (1: enabled, 0: disabled). Must be actively tied high or low. Do not leave floating.
FB	2	I	Voltage feedback of adjustable version. Must be connected to V_{OUT} at fixed output voltage versions.
GND	3		Control / logic and power ground
L	5	I	Connection for Inductor
VIN	1	I	Boost converter input voltage
VOUT	4	O	Boost converter output voltage

8 Specifications

8.1 Absolute Maximum Ratings

over operating free-air temperature range (unless otherwise noted)(1)

		TPS6122x	UNIT
V_{IN}	Input voltage on VIN, L, VOUT, EN, FB	–0.3 to 7.5	V
T_J	Operating junction temperature	–40 to 150	°C

(1) Stresses beyond those listed under *Absolute Maximum Ratings* may cause permanent damage to the device. These are stress ratings only, and functional operation of the device at these or any other conditions beyond those indicated under *Recommended Operating Conditions* is not implied. Exposure to absolute-maximum-rated conditions for extended periods may affect device reliability.

8.2 Handling Ratings

			MIN	MAX	UNIT
T_{stg}	Storage temperature range		–65	150	°C
$V_{(ESD)}$	Electrostatic discharge	Human body model (HBM), per ANSI/ESDA/JEDEC JS-001, all pins(1)	–2	2	kV
		Charged device model (CDM), per JEDEC specification JESD22-C101, all pins(2)	–1.5	1.5	kV

(1) JEDEC document JEP155 states that 500V HBM rating allows safe manufacturing with a standard ESD control process.
(2) JEDEC document JEP157 states that 250V CDM rating allows safe manufacturing with a standard ESD control process.

Copyright © 2009–2014, Texas Instruments Incorporated

8.3 Recommended Operating Conditions

		MIN	NOM	MAX	UNIT
V_{IN}	Supply voltage at VIN	0.7		5.5	V
T_J	Operating virtual junction temperature	–40		125	°C

8.4 Thermal Information

THERMAL METRIC[1]		TPS6122x DCK 6 PINS	UNIT
$R_{\theta JA}$	Junction-to-ambient thermal resistance	231.2	°C/W
$R_{\theta JCtop}$	Junction-to-case (top) thermal resistance	61.8	
$R_{\theta JB}$	Junction-to-board thermal resistance	78.8	
ψ_{JT}	Junction-to-top characterization parameter	2.2	
ψ_{JB}	Junction-to-board characterization parameter	78.0	
$R_{\theta JCbot}$	Junction-to-case (bottom) thermal resistance	n/a	

(1) For more information about traditional and new thermal metrics, see the *IC Package Thermal Metrics* application report, SPRA953.

8.5 Electrical Characteristics

over recommended free-air temperature range and over recommended input voltage range (typical at an ambient temperature range of 25°C) (unless otherwise noted)

PARAMETER			TEST CONDITIONS	MIN	TYP	MAX	UNIT
DC/DC STAGE							
V_{IN}	Input voltage			0.7		5.5	V
V_{IN}	Minimum input voltage at startup		$R_{Load} \geq 150\ \Omega$			0.7	V
V_{OUT}	TPS61220 output voltage		$V_{IN} < V_{OUT}$	1.8		6.0	V
V_{FB}	TPS61220 feedback voltage			483	500	513	mV
V_{OUT}	TPS61221 output voltage (3.3 V)		$V_{IN} < V_{OUT}$	3.20	3.30	3.41	V
V_{OUT}	TPS61222 output voltage (5 V)		$V_{IN} < V_{OUT}$	4.82	5.00	5.13	V
I_{LH}	Inductor current ripple				200		mA
I_{SW}	switch current limit		V_{OUT} = 3.3 V, V_{IN} = 1.2 V, T_A = 25°C	240	400		mA
			V_{OUT} = 3.3 V	200	400		mA
R_{DSon_HSD}	Rectifying switch on resistance		V_{OUT} = 3.3 V		1000		mΩ
			V_{OUT} = 5.0 V		700		mΩ
R_{DSon_LSD}	Main switch on resistance		V_{OUT} = 3.3 V		600		mΩ
			V_{OUT} = 5.0 V		550		mΩ
	Line regulation		$V_{IN} < V_{OUT}$		0.5%		
	Load regulation		$V_{IN} < V_{OUT}$		0.5%		
I_Q	Quiescent current	V_{IN}	I_O = 0 mA, $V_{EN} = V_{IN}$ = 1.2 V, V_{OUT} = 3.3 V		0.5	0.9	µA
		V_{OUT}			5	7.5	µA
I_{SD}	Shutdown current	V_{IN}	V_{EN} = 0 V, V_{IN} = 1.2 V, $V_{OUT} \geq V_{IN}$		0.2	0.5	µA
I_{LKG_VOUT}	Leakage current into VOUT		V_{EN} = 0 V, V_{IN} = 1.2 V, V_{OUT} = 3.3 V		1		µA
I_{LKG_L}	Leakage current into L		V_{EN} = 0 V, V_{IN} = 1.2 V, V_L = 1.2 V, $V_{OUT} \geq V_{IN}$		0.01	0.2	µA
I_{FB}	TPS61220 Feedback input current		V_{FB} = 0.5 V			0.01	µA
I_{EN}	EN input current		Clamped on GND or V_{IN} (V_{IN} < 1.5 V)		0.005	0.1	µA
CONTROL STAGE							
V_{IL}	EN input low voltage		$V_{IN} \leq 1.5$ V			$0.2 \times V_{IN}$	V
V_{IH}	EN input high voltage		$V_{IN} \leq 1.5$ V	$0.8 \times V_{IN}$			V
V_{IL}	EN input low voltage		5 V > V_{IN} > 1.5 V			0.4	V
V_{IH}	EN input high voltage		5 V > V_{IN} > 1.5 V	1.2			V

Copyright © 2009–2014, Texas Instruments Incorporated

Electrical Characteristics (continued)

over recommended free-air temperature range and over recommended input voltage range (typical at an ambient temperature range of 25°C) (unless otherwise noted)

PARAMETER		TEST CONDITIONS	MIN	TYP	MAX	UNIT
V_{UVLO}	Undervoltage lockout threshold for turn off	V_{IN} decreasing		0.5	0.7	V
	Overvoltage protection threshold		6.0		7.5	V
	Overtemperature protection			140		°C
	Overtemperature hysteresis			20		°C

8.6 Typical Characteristics

TABLE OF GRAPHS		FIGURE
Maximum Output Current	versus Input Voltage (TPS61220, TPS61221, TPS61222)	Figure 1
Efficiency	versus Output Current, V_{OUT} = 1.8 V, V_{IN} = [0.7 V; 1.2 V; 1.5 V] (TPS61220)	Figure 2
	versus Output Current, V_{IN} = [0.7 V; 1.2 V; 2.4 V; 3 V] (TPS61221)	Figure 3
	versus Output Current, V_{IN} = [0.7 V; 1.2 V; 2.4V; 3.6 V; 4.2 V] (TPS61222)	Figure 4
	versus Input Voltage, V_{OUT} = 1.8 V, I_{OUT} = [100 µA; 1 mA; 10 mA; 50 mA] (TPS61220)	Figure 5
	versus Input Voltage, I_{OUT} = [100 µA; 1 mA; 10 mA; 50 mA] (TPS61221)	Figure 6
	versus Input Voltage, I_{OUT} = [100 µA; 1 mA; 10 mA; 50 mA] (TPS61222)	Figure 7
Input Current	at No Output Load, Device Enabled (TPS61220, TPS61221, TPS61222)	Figure 8
Output Voltage	versus Output Current, V_{OUT} = 1.8 V, V_{IN} = [0.7 V; 1.2 V] (TPS61220)	Figure 9
	versus Output Current, V_{IN} = [0.7 V; 1.2 V; 2.4 V] (TPS61221)	Figure 10
	versus Output Current, V_{IN} = [0.7 V; 1.2 V; 2.4 V; 3.6 V] (TPS61222)	Figure 11
	versus Input Voltage, Device Disabled, R_{LOAD} = [1 kΩ; 10 kΩ] (TPS6122x)	Figure 12
Waveforms	Output Voltage Ripple, V_{IN} = 0.8 V, V_{OUT} = 1.8 V, I_{OUT} = 20 mA (TPS61220)	Figure 13
	Output Voltage Ripple V_{IN} = 1.8 V, I_{OUT} = 50 mA (TPS61221)	Figure 14
	Load Transient Response, V_{IN} = 1.2 V, I_{OUT} = 6 mA to 50 mA (TPS61221)	Figure 15
	Load Transient Response, V_{IN} = 2.4 V, I_{OUT} = 14 mA to 126 mA (TPS61222)	Figure 16
	Line Transient Response, V_{IN} = 1.8 V to 2.4 V, R_{LOAD} = 100 Ω (TPS61221)	Figure 17
	Line Transient Response, V_{IN} = 2.8 V to 3.6 V, R_{LOAD} = 100 Ω (TPS61222)	Figure 18
	Startup after Enable, V_{IN} = 0.7 V, V_{OUT} = 1.8 V, R_{LOAD} = 150 Ω (TPS61220)	Figure 19
	Startup after Enable, V_{IN} = 0.7 V, R_{LOAD} = 150 Ω, (TPS61222)	Figure 20
	Continuous Current Operation, V_{IN} = 1.2 V, V_{OUT} = 1.8 V, I_{OUT} = 50mA (TPS61220)	Figure 21
	Discontinuous Current Operation, V_{IN} = 1.2 V, V_{OUT} = 1.8 V, I_{OUT} = 10mA (TPS61220)	Figure 22

Copyright © 2009–2014, Texas Instruments Incorporated

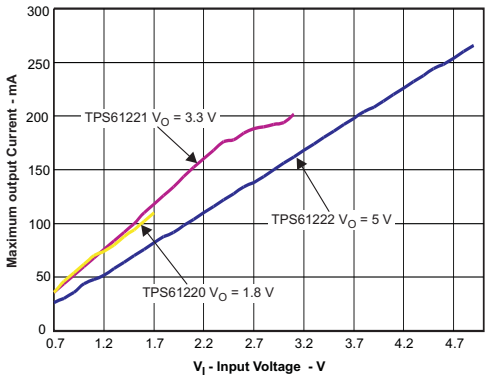

Figure 1. Maximum Output Current versus Input Voltage (TPS61220, TPS61221, TPS61222)

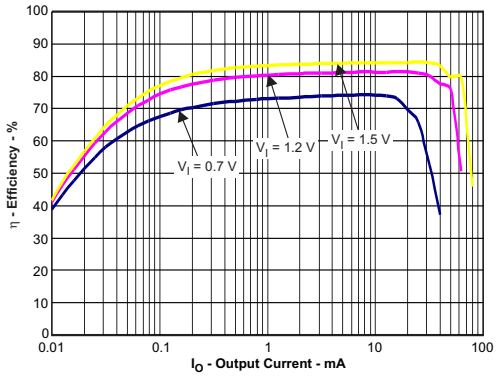

V_O = 1.8 V

Figure 2. Efficiency versus Output Current and Input Voltage (TPS61220)

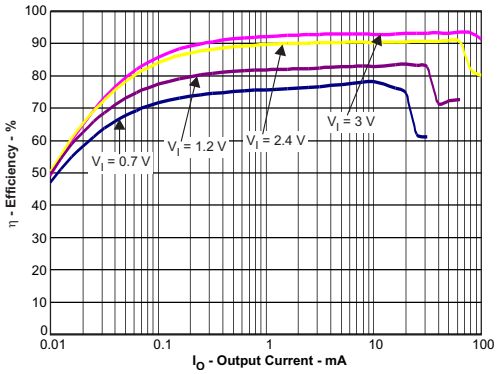

V_O = 3.3 V

Figure 3. Efficiency versus Output Current and Input Voltage (TPS61221)

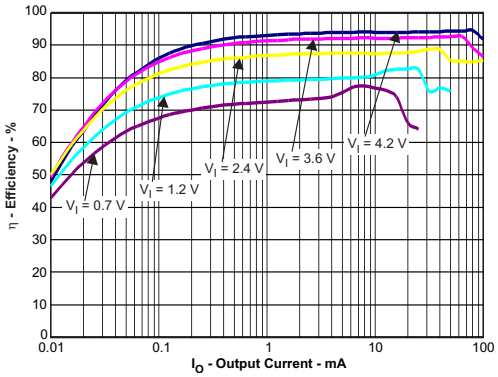

V_O = 5 V

Figure 4. Efficiency versus Output Current and Input Voltage (TPS61222)

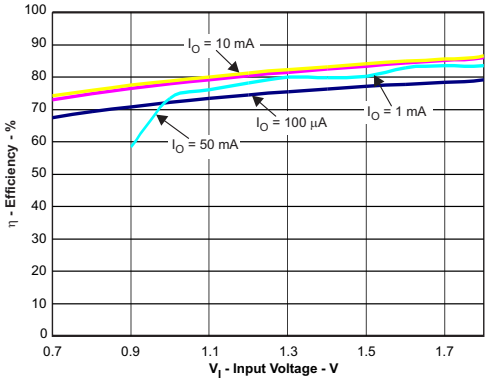

V_O = 1.8 V

Figure 5. Efficiency versus Input Voltage and Output Current (TPS61220)

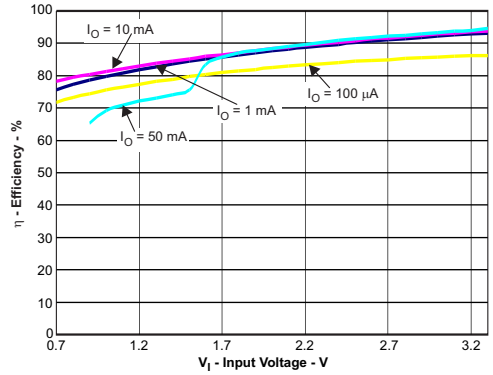

V_O = 3.3 V

Figure 6. Efficiency versus Input Voltage and Output Current (TPS61221)

Copyright © 2009–2014, Texas Instruments Incorporated

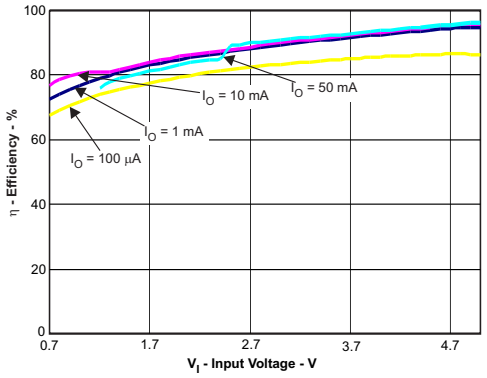

V_O = 5 V

Figure 7. Efficiency versus Input Voltage and Output Current (TPS61222)

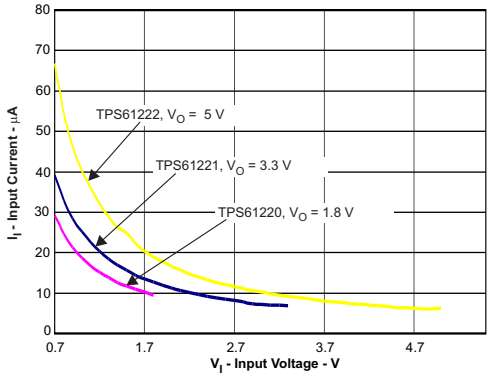

Device enabled

Figure 8. No Load Input Current versus Input Voltage, Device Enabled (TPS61220, TPS61221, TPS61222)

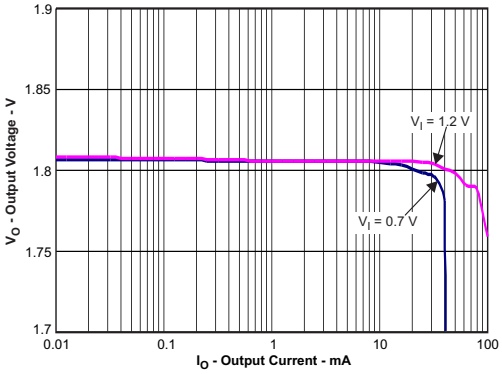

V_O = 1.8 V

Figure 9. Output Voltage versus Output Current and Input Voltage (TPS61220)

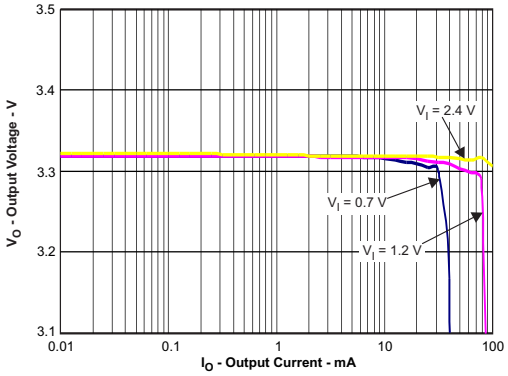

V_O = 3.3 V

Figure 10. Output Voltage versus Output Current and Input Voltage (TPS61221)

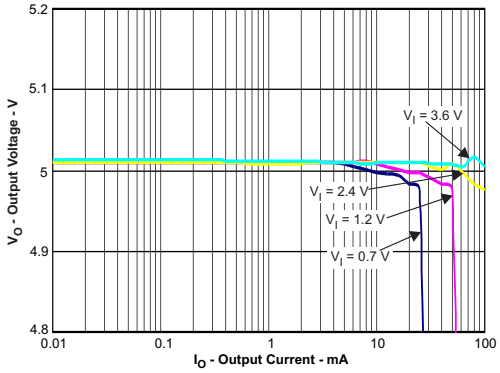

V_O = 5 V

Figure 11. Output Voltage versus Output Current and Input Voltage (TPS61222)

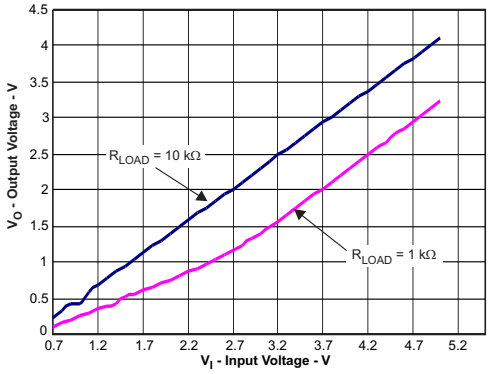

V_{EN} = 0 V

Figure 12. Output Voltage versus Input Voltage, Device Disabled (TPS61220)

Copyright © 2009–2014, Texas Instruments Incorporated

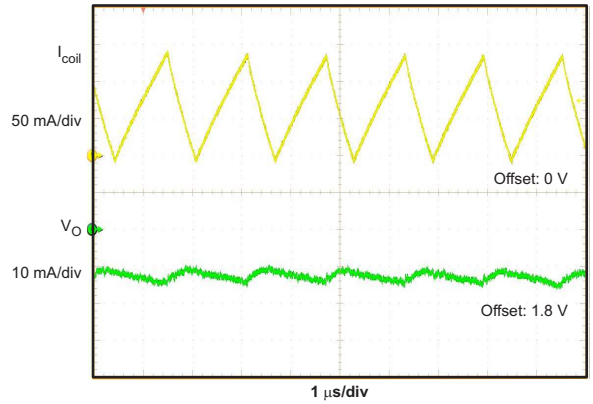

V_I = 0.8 V V_O = 1.8 V I_O = 20 mA

Figure 13. Output Voltage Ripple (TPS61220)

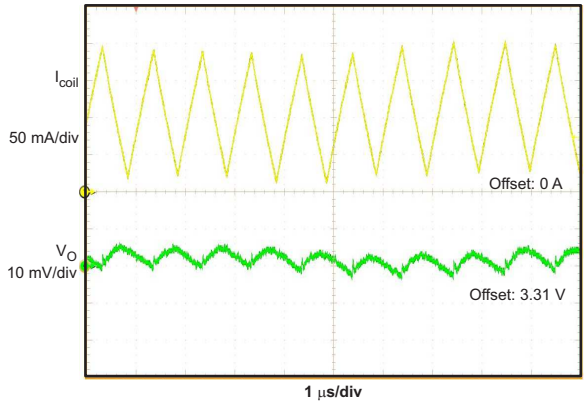

V_I = 1.8 V V_O = 3.3 V I_O = 50 mA

Figure 14. Output Voltage Ripple (TPS61221)

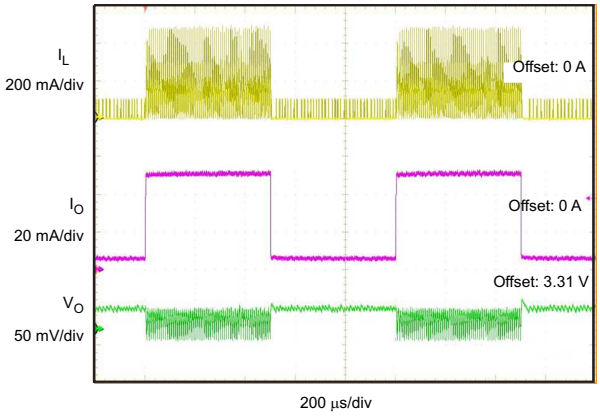

V_I = 1.2 V I_O = 6 mA to 50 mA

Figure 15. Load Transient Response (TPS61221)

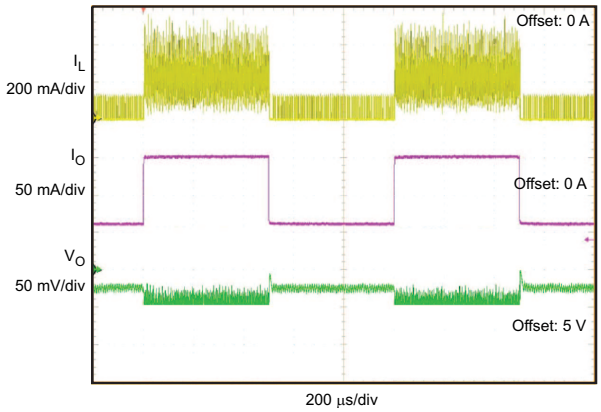

V_I = 2.4 V I_O = 14 mA to 126 mA

Figure 16. Load Transient Response (TPS61222)

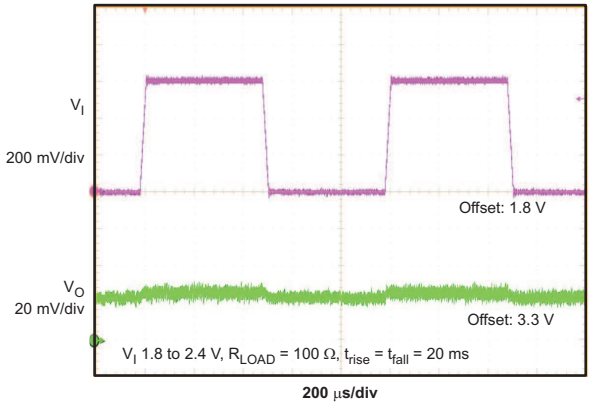

V_I = 2.4 V to 2.4 V R_{LOAD} = 100 Ω t_{rise} = t_{fall} = 20 ms

Figure 17. Line Transient Response (TPS61221)

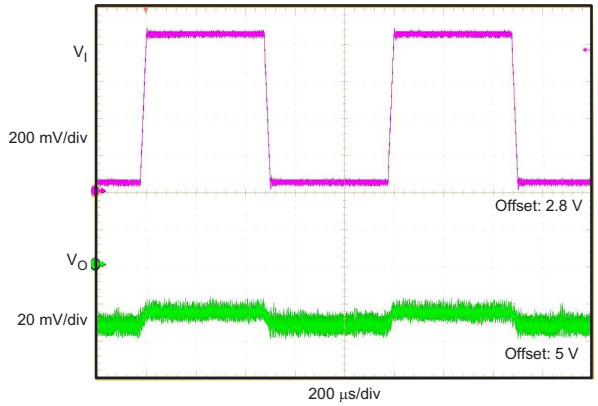

V_I = 2.8 V to 3.6 V R_{LOAD} = 100 Ω t_{rise} = t_{fall} = 20 ms

Figure 18. Line Transient Response (TPS61222)

Copyright © 2009–2014, Texas Instruments Incorporated

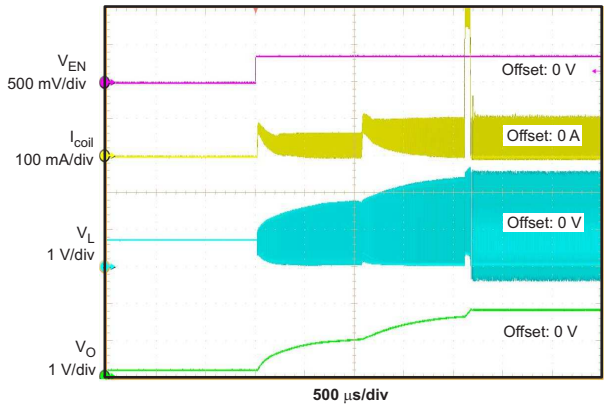

V_I = 0.7 V V_O = 1.8 V R_{LOAD} = 150 Ω

Figure 19. Startup After Enable (TPS61120)

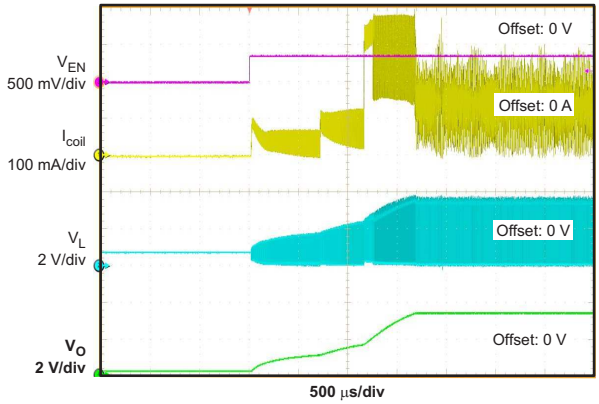

V_I = 0.7 V V_O = 3.3 V R_{LOAD} = 50 Ω

Figure 20. Startup After Enable (TPS61221)

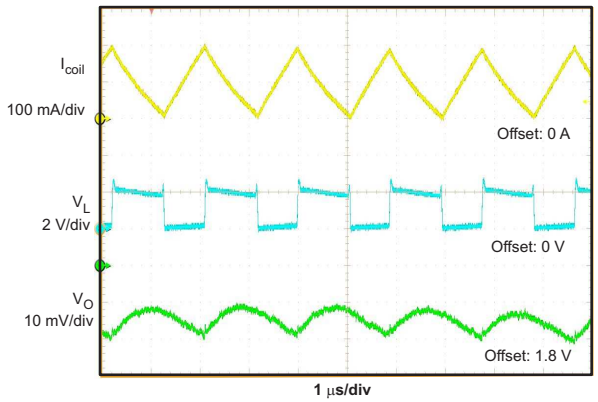

V_I = 1.2 V V_O = 1.8 V I_O = 50 mA

Figure 21. Continuous Current Operation (TPS61220)

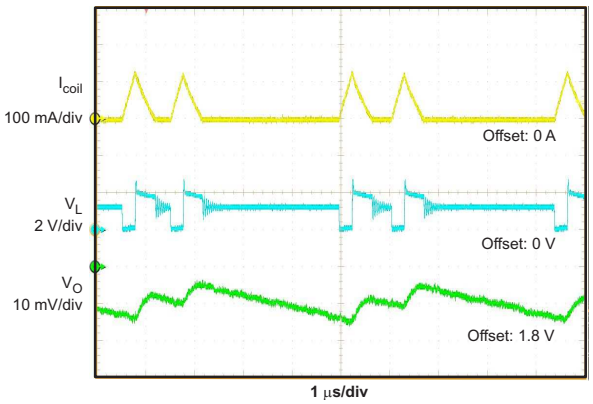

V_I = 1.2 V V_O = 1.8 V I_O = 10 mA

Figure 22. Discontinuous Current Operation (TPS61220)

9 Parameter Measurement Information

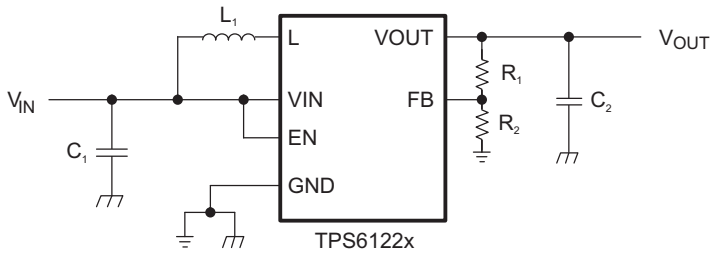

Table 1. List Of Components:

COMPONENT REFERENCE	PART NUMBER	MANUFACTURER	VALUE
C_1	GRM188R60J106ME84D	Murata	10 µF, 6.3V. X5R Ceramic
C_2	GRM188R60J106ME84D	Murata	10 µF, 6.3V. X5R Ceramic
L_1	EPL3015-472MLB	Coilcraft	4.7 µH
R_1, R_2			adjustable version: Values depending on the programmed output voltage
			fixed version: R_1= 0 Ω, R_2 not used

Copyright © 2009–2014, Texas Instruments Incorporated

10 Detailed Description

10.1 Overview

The TPS6122x is a high performance, high efficient family of switching boost converters. To achieve high efficiency, the power stage is realized as a synchronous-boost topology. For the power switching, two actively-controlled low-R_{DSon} power MOSFETs are implemented.

10.2 Functional Block Diagrams

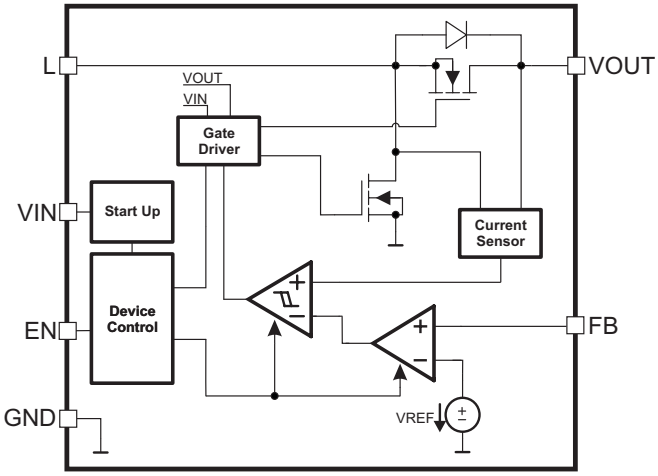

Figure 23. Functional Block Diagram (Adjustable Version)

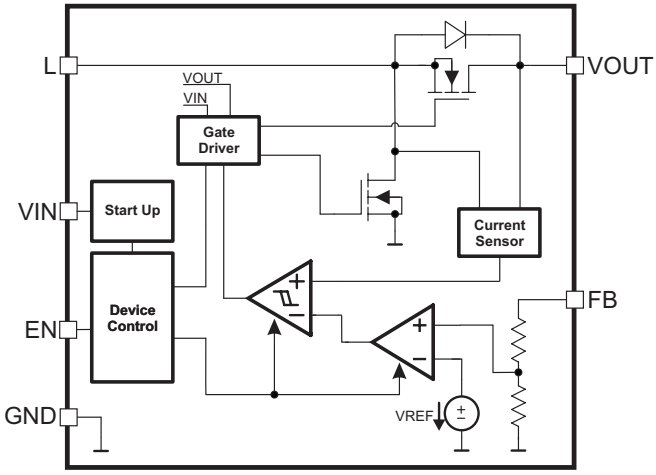

Figure 24. Functional Block Diagram (Fixed Output Voltage Version)

10.3 Feature Description

10.3.1 Controller Circuit

The device is controlled by a hysteretic current mode controller. This controller regulates the output voltage by keeping the inductor ripple current constant in the range of 200 mA and adjusting the offset of this inductor current depending on the output load. If the required average input current is lower than the average inductor current defined by this constant ripple current, the inductor current becomes discontinuous to keep the efficiency high under low-load conditions.

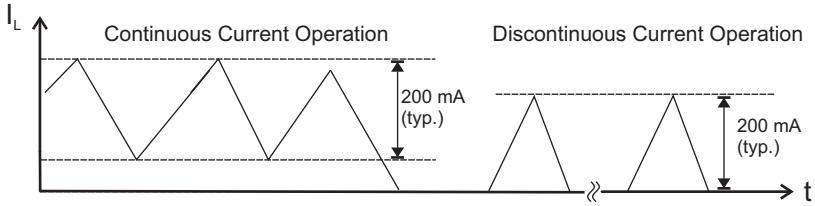

Figure 25. Hysteretic Current Operation

The output voltage V_{OUT} is monitored via the feedback network which is connected to the voltage error amplifier. To regulate the output voltage, the voltage error amplifier compares this feedback voltage to the internal voltage reference and adjusts the required offset of the inductor current accordingly. In fixed output voltage devices, an internal feedback network is used to program the output voltage. In adjustable versions an external resistor divider is required.

The self-oscillating hysteretic current mode architecture is inherently stable and allows fast response to load variations. This architecture also allows using a wide range of inductor and capacitor values.

Feature Description (continued)

10.3.2 Device Enable And Shutdown Mode

The device is enabled when EN is driven high, and shut down when EN is low. During shutdown, the converter stops switching and all internal control circuitry is turned off. During shutdown, the input voltage is connected to the output through the back-gate diode of the rectifying MOSFET. This means that voltage is always present at the output, which can be as high as the input voltage or lower depending on the load.

10.3.3 Startup

After the EN pin is tied high, the device begins to operate. If the input voltage is not high enough to supply the control circuit properly, a startup oscillator operates the switches. During this phase, the switching frequency is controlled by the oscillator, and the maximum switch current is limited. When the device has built up the output voltage to approximately 1.8V, high enough to supply the control circuit, the device switches to its normal hysteretic current mode operation. The startup time depends on input voltage and load current.

10.3.4 Operation At Output Overload

If, in normal boost operation, the inductor current reaches the internal switch current limit threshold, the main switch is turned off to stop further increase of the input current. In this case the output voltage will decrease because the device cannot provide sufficient power to maintain the set output voltage.

If the output voltage drops below the input voltage, the backgate diode of the rectifying switch becomes forward biased, and current starts to flow through it. This diode cannot be turned off, so the current finally is only limited by the remaining DC resistances. As soon as the overload condition is removed, the converter resumes providing the set output voltage.

10.3.5 Undervoltage Lockout

An undervoltage lockout function stops the operation of the converter if the input voltage drops below the typical undervoltage lockout threshold. This function is implemented in order to prevent converter malfunction.

10.3.6 Overvoltage Protection

If, for any reason, the output voltage is not fed back properly to the input of the voltage amplifier, control of the output voltage is lost. Therefore an overvoltage protection is implemented to avoid the output voltage exceeding critical values for the device and possibly for the system it is supplying. For this protection, the TPS6122x output voltage is also monitored internally. If it reaches the internally programmed threshold of 6.5 V, typically the voltage amplifier regulates (limits) the output voltage to this value.

If the TPS6122x is used to drive LEDs, this feature protects the circuit if the LED fails.

10.3.7 Overtemperature Protection

The device has a built-in temperature sensor which monitors the internal IC junction temperature. If the temperature exceeds the programmed threshold (see electrical characteristics table), the device stops operating. As soon as the IC temperature has decreased below the programmed threshold, it starts operating again. To prevent unstable operation close to the region of overtemperature threshold, a built-in hysteresis is implemented.

10.4 Device Functional Modes

- Enabled or disabled
- Continuous or discontinuous current operation
- Protective mechanisms
  - Output Overload
  - Undervoltage
  - Overvoltage
  - Overtemperature

Copyright © 2009–2014, Texas Instruments Incorporated

11 Applications and Implementation

NOTE

Information in the following applications sections is not part of the TI component specification, and TI does not warrant its accuracy or completeness. TI's customers are responsible for determining suitability of components for their purposes. Customers should validate and test their design implementation to confirm system functionality.

11.1 Application Information

The TPS6122x family devices provide a power-supply solution for products powered by either a single-cell, two-cell, or three-cell alkaline, NiCd or NiMH, or one-cell Li-Ion or Li-polymer battery. Use the following design procedure to select component values for the TPS61220 device and the TPS61222 device. Alternatively, use the SwitcherPro™ tool. This section presents a simplified discussion of the design process.

11.2 Typical Applications

11.2.1 Specific Application, Fixed Output Voltage Supply

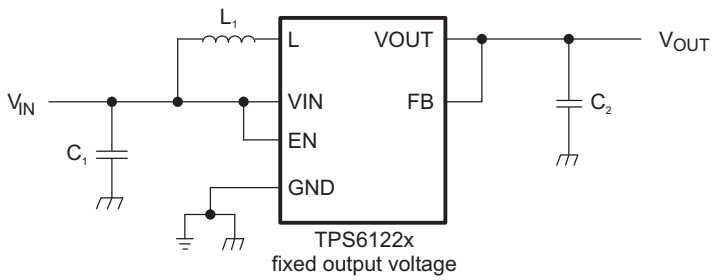

Figure 26. Typical Application Circuit For Fixed Output Voltage Option

11.2.1.1 Design Requirements

- Single 5 V output at up to 60 mA
- Power source, two AA alkaline cells
- Greater than 90% conversion efficiency

11.2.1.2 Detailed Design Procedure

11.2.1.2.1 Device Choice

The TPS61222 DC/DC converter is intended for systems powered by anything from a single cell through up to three Alkaline, NiCd or NiMH cells with a total typical pin voltage between 0.7 V and 5.5 V. They can also be used in systems powered by one-cell Li-Ion or Li-Polymer batteries with a typical voltage between 2.5 V and 4.2 V. Additionally, any other voltage source with a typical output voltage between 0.7 V and 5.5 V can be used with the TPS61222.

11.2.1.2.2 Programming The Output Voltage

In the fixed-voltage version used for this example, the output voltage is set by an internal resistor divider. The FB pin is used to sense the output voltage. To configure the device properly, connect the FB pin directly to VOUT as shown in Figure 26.

11.2.1.2.3 Inductor Selection

To make sure that the device can operate, a suitable inductor must be connected between pin VIN and pin L. Inductor values of 4.7 µH show good performance over the whole input and output voltage range.

Choosing other inductance values affects the switching frequency *f* proportional to 1/L as shown in Equation 1.

Typical Applications (continued)

$$L = \frac{1}{f \times 200\ mA} \times \frac{V_{IN} \times (V_{OUT} - V_{IN})}{V_{OUT}} \tag{1}$$

Choosing inductor values higher than 4.7 µH can improve efficiency due to reduced switching frequency and therefore with reduced switching losses. Using inductor values below 2.2 µH is not recommended.

Having selected an inductance value, the peak current for the inductor in steady-state operation can be calculated. Equation 2 gives the peak-current estimate.

$$I_{L,MAX} = \begin{cases} \dfrac{V_{OUT} \times I_{OUT}}{0.8 \times V_{IN}} + 100\ mA; & \text{continous current operation} \\ 200\ mA; & \text{discontinuous current operation} \end{cases} \tag{2}$$

Equation 2 provides a suitable inductor current rating. However, remember that load transients and error conditions may cause higher inductor currents.

Equation 3 provides an easy way to estimate whether the device will work in continuous or discontinuous operation depending on the operating points. As long as the Equation 3 is true, continuous operation is typically established. If Equation 3 becomes false, discontinous operation is typically established.

$$\frac{V_{OUT} \times I_{OUT}}{V_{IN}} > 0.8 \times 100\ mA \tag{3}$$

The following inductor series from different suppliers have been used with TPS6122x converters:

Table 2. List Of Inductors

VENDOR	INDUCTOR SERIES
Coilcraft	EPL3015
	EPL2010
Murata	LQH3NP
Tajo Yuden	NR3015
Wurth Elektronik	WE-TPC Typ S

11.2.1.2.4 Capacitor Selection

11.2.1.2.4.1 Input Capacitor

An input capacitor value of at least 10 µF is recommended to improve transient behavior of the regulator and EMI behavior of the total power supply circuit. A ceramic capacitor placed as close as possible to the VIN and GND pins of the IC is recommended.

11.2.1.2.4.2 Output Capacitor

For the output capacitor C_2, small ceramic capacitors are recommended, placed as close as possible to the VOUT and GND pins of the IC. If, for any reason, the application requires the use of large capacitors which cannot be placed close to the IC, the use of a small ceramic capacitor with a capacitance value of around 2.2µF in parallel to the large one is recommended. This small capacitor should be placed as close as possible to the VOUT and GND pins of the IC.

A minimum capacitance value of 4.7 µF should be used, 10 µF is recommended. If the inductor value exceeds 4.7 µH, the value of the output capacitance value needs to be half the inductance value or higher for stability reasons, see Equation 4.

$$C_2 \geq \frac{L}{2} \times \frac{\mu F}{\mu H} \tag{4}$$

Copyright © 2009–2014, Texas Instruments Incorporated

The TPS6122x is not sensitive to the ESR in terms of stability. However, low ESR capacitors, such as ceramic capacitors, are recommended anyway to minimize output voltage ripple. If heavy load changes are expected, increase the output capacitor value to avoid output voltage drops during fast load transients.

11.2.1.3 Application Curves

Figure 27 shows the excellent efficiency of the converter, which remains above 80% even with heavily discharged cells.

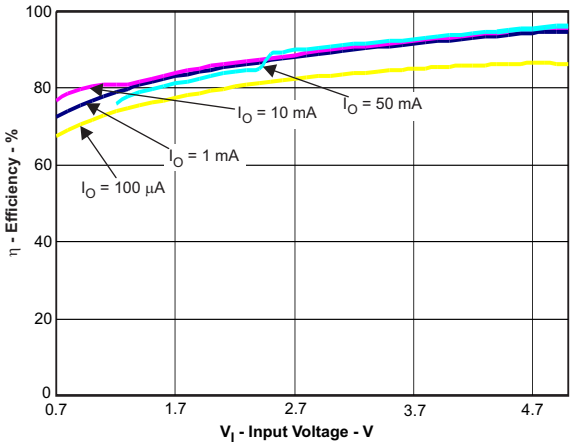

Figure 27. TPS61222 Performance

11.2.2 Specific Application, Variable Output Voltage Supply

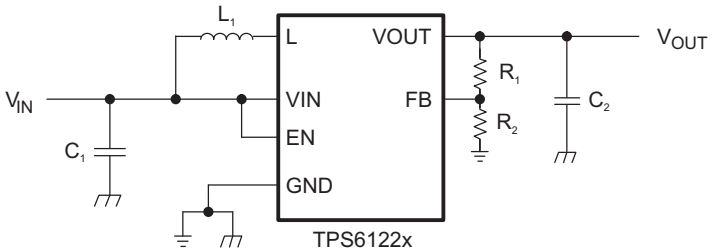

Figure 28. Application Circuit For Adjustable Output Voltage Option

11.2.2.1 Design Requirements

- Single 4.2 V output at up to 50 mA
- Power source, two AA alkaline cells
- Greater than 80% conversion efficiency

11.2.2.2 Detailed Design Procedure

The design procedure for this application is identical to that for the fixed-output supply except for programming the output voltage.

11.2.2.2.1 Device Selection

This application example uses the TPS61220 so that the output voltage can be set at 4.2 V.

11.2.2.2.2 Programming The Output Voltage

In the adjustable output versions, an external resistor divider is used to adjust the output voltage. The resistor divider must be connected between VOUT, FB and GND as shown in Figure 28. When the output voltage is regulated properly, the typical voltage value at the FB pin is 500 mV for the adjustable devices. The maximum recommended value for the output voltage is 6.0 V. The current through the resistor divider should be about 100 times greater than the current into the FB pin. The typical current into the FB pin is 0.01 µA, and the voltage across the resistor between FB and GND, R_2, is typically 500 mV. Based on those two values, the recommended value for R_2 should be lower than 500 kΩ, in order to set the divider current to 1 µA or higher. The value of the resistor connected between VOUT and FB, R_1, depending on the needed output voltage (V_{OUT}), can be calculated using Equation 5:

$$R_1 = R_2 \times \left(\frac{V_{OUT}}{V_{FB}} - 1 \right) \tag{5}$$

For this example, if an output voltage of 4.2 V is needed, a 1.2-MΩ resistor is calculated for R_1 when 160 kΩ is selected for R_2. This would yield an output voltage of 4.25 V, neglecting resistor tolerances.

11.2.2.2.3 Inductor Selection

See *Inductor Selection* for a discussion on inductor choice.

11.2.2.2.4 Capacitor Selection

The procedure for selecting capacitors is the same as for the fixed output voltage circuit. See *Capacitor Selection*.

11.2.2.3 Application Curves

Figure 29 shows the excellent efficiency of the converter, which remains above 80% with heavily discharged cells.

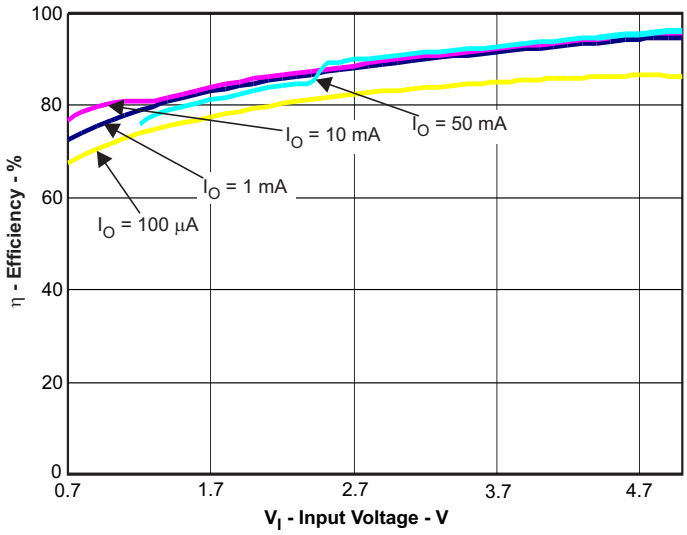

Figure 29. TPS61220 Performance

Copyright © 2009–2014, Texas Instruments Incorporated

12 Power Supply Recommendations

12.1 Typical Power Sources

The high conversion efficiency of this device encourages the use of a wide range of battery types. Photovoltaic cells and large capacitors ('supercapacitors') may also serve as power sources within the limits specified in *Recommended Operating Conditions*.

12.2 Input Voltage Effects On Output Current and Efficiency

The TPS6122x devices have a wide input-voltage range, and deliver enough current to be applicable to many portable applications. However, at lower extremes of input voltage, less output current is available, and efficiency is somewhat less. Figure 1 - Figure 11 show the tradeoffs between input voltage, output current capacity and conversion efficiency, and allow the designer to plan how far to discharge a battery array before system shutdown occurs.

12.3 Behavior While Disabled

When the device is disabled, the output voltage follows the power-source voltage as shown in Figure 12.

12.4 Startup

See the description of the *Startup* sequence for more information.

13 Layout

13.1 Layout Guidelines

As for all switching power supplies, the layout is an important step in the design, especially at high peak currents and high switching frequencies. If the layout is not carefully done, the regulator could show stability problems as well as EMI problems. Therefore, use wide and short traces for the main current path and for the power ground paths. The input and output capacitor, as well as the inductor should be placed as close as possible to the IC.

The feedback divider in an application using the TPS61220 should be placed as close as possible to the control ground pin of the IC. To route the ground path from the resistor divider, use short traces as well, separated from the power ground traces. This avoids ground shift problems, which can occur due to superimposition of power ground current and control ground current. Assure that the ground traces are connected close to the device GND pin.

13.2 Layout Example

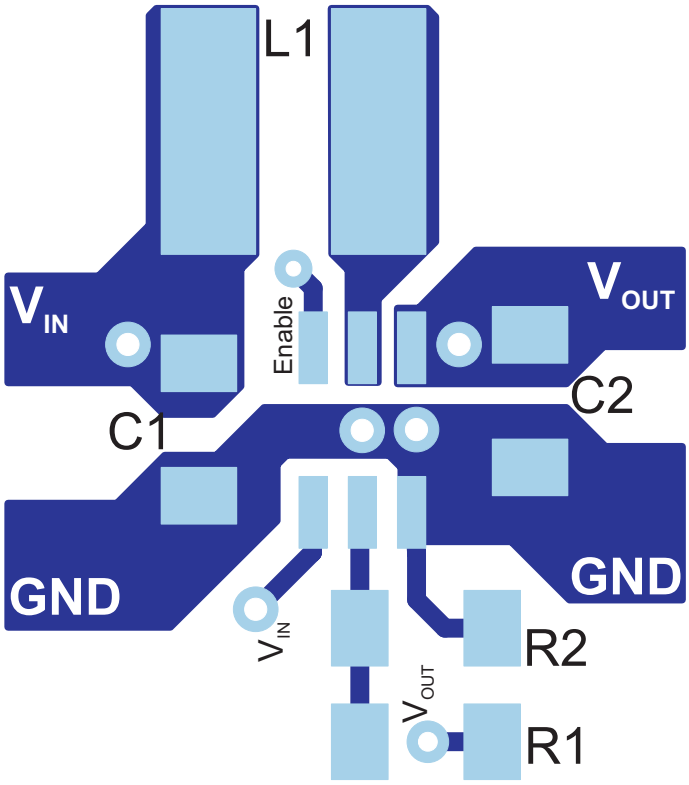

Figure 30. PCB Layout Suggestion For Adjustable Output Voltage Options

13.3 Thermal Considerations

Implementation of integrated circuits in low-profile and fine-pitch surface-mount packages typically requires special attention to power dissipation. Many system-dependent issues such as thermal coupling, airflow, added heat sinks and convection surfaces, and the presence of other heat-generating components affect the power-dissipation limits of a given component.

Three basic approaches for enhancing thermal performance are listed below.

- Improving the power-dissipation capability of the PCB design
- Improving the thermal coupling of the component to the PCB
- Introducing airflow in the system

For more details on how to use the thermal parameters in the dissipation ratings table please check the Thermal Characteristics Application Note (SZZA017) and the IC Package Thermal Metrics Application Note (SPRA953).

Copyright © 2009–2014, Texas Instruments Incorporated

14 Device and Documentation Support

14.1 Device Support

14.1.1 Third-Party Products Disclaimer

TI'S PUBLICATION OF INFORMATION REGARDING THIRD-PARTY PRODUCTS OR SERVICES DOES NOT CONSTITUTE AN ENDORSEMENT REGARDING THE SUITABILITY OF SUCH PRODUCTS OR SERVICES OR A WARRANTY, REPRESENTATION OR ENDORSEMENT OF SUCH PRODUCTS OR SERVICES, EITHER ALONE OR IN COMBINATION WITH ANY TI PRODUCT OR SERVICE.

14.1.2 Development Support

TPS61220EVM-319 Evaluation Module

SwitcherPro Switching Power Supply Design Tool (Circuit Design & Simulation)

14.2 Documentation Support

14.2.1 Related Documentation

Gas Sensor Platform Reference Design

Wireless Heart Monitor with Bluetooth Low Energy

14.3 Related Links

The table below lists quick access links. Categories include technical documents, support and community resources, tools and software, and quick access to sample or buy.

Table 3. Related Links

PARTS	PRODUCT FOLDER	SAMPLE & BUY	TECHNICAL DOCUMENTS	TOOLS & SOFTWARE	SUPPORT & COMMUNITY
TPS61220	Click here	Click here	Click here	Click here	Click here
TPS61221	Click here	Click here	Click here	Click here	Click here
TPS61222	Click here	Click here	Click here	Click here	Click here

14.4 Trademarks

SwitcherPro is a trademark of Texas Instruments.
All other trademarks are the property of their respective owners.

14.5 Electrostatic Discharge Caution

These devices have limited built-in ESD protection. The leads should be shorted together or the device placed in conductive foam during storage or handling to prevent electrostatic damage to the MOS gates.

14.6 Glossary

SLYZ022 — *TI Glossary*.

This glossary lists and explains terms, acronyms, and definitions.

15 Mechanical, Packaging, and Orderable Information

The following pages include mechanical packaging and orderable information. This information is the most current data available for the designated devices. This data is subject to change without notice and revision of this document. For browser-based versions of this data sheet, refer to the left-hand navigation.

Copyright © 2009–2014, Texas Instruments Incorporated

PACKAGING INFORMATION

Orderable Device	Status (1)	Package Type	Package Drawing	Pins	Package Qty	Eco Plan (2)	Lead finish/ Ball material (6)	MSL Peak Temp (3)	Op Temp (°C)	Device Marking (4/5)	Samples
TPS61220DCKR	ACTIVE	SC70	DCK	6	3000	RoHS & Green	NIPDAU	Level-1-260C-UNLIM	-40 to 85	CKR	Samples
TPS61220DCKT	ACTIVE	SC70	DCK	6	250	RoHS & Green	NIPDAU	Level-1-260C-UNLIM	-40 to 85	CKR	Samples
TPS61221DCKR	ACTIVE	SC70	DCK	6	3000	RoHS & Green	NIPDAU	Level-1-260C-UNLIM	-40 to 85	CKS	Samples
TPS61221DCKT	ACTIVE	SC70	DCK	6	250	RoHS & Green	NIPDAU	Level-1-260C-UNLIM	-40 to 85	CKS	Samples
TPS61222DCKR	ACTIVE	SC70	DCK	6	3000	RoHS & Green	NIPDAU	Level-1-260C-UNLIM	-40 to 85	CKT	Samples
TPS61222DCKT	ACTIVE	SC70	DCK	6	250	RoHS & Green	NIPDAU	Level-1-260C-UNLIM	-40 to 85	CKT	Samples

(1) The marketing status values are defined as follows:
ACTIVE: Product device recommended for new designs.
LIFEBUY: TI has announced that the device will be discontinued, and a lifetime-buy period is in effect.
NRND: Not recommended for new designs. Device is in production to support existing customers, but TI does not recommend using this part in a new design.
PREVIEW: Device has been announced but is not in production. Samples may or may not be available.
OBSOLETE: TI has discontinued the production of the device.

(2) **RoHS:** TI defines "RoHS" to mean semiconductor products that are compliant with the current EU RoHS requirements for all 10 RoHS substances, including the requirement that RoHS substance do not exceed 0.1% by weight in homogeneous materials. Where designed to be soldered at high temperatures, "RoHS" products are suitable for use in specified lead-free processes. TI may reference these types of products as "Pb-Free".
RoHS Exempt: TI defines "RoHS Exempt" to mean products that contain lead but are compliant with EU RoHS pursuant to a specific EU RoHS exemption.
Green: TI defines "Green" to mean the content of Chlorine (Cl) and Bromine (Br) based flame retardants meet JS709B low halogen requirements of <=1000ppm threshold. Antimony trioxide based flame retardants must also meet the <=1000ppm threshold requirement.

(3) MSL, Peak Temp. - The Moisture Sensitivity Level rating according to the JEDEC industry standard classifications, and peak solder temperature.

(4) There may be additional marking, which relates to the logo, the lot trace code information, or the environmental category on the device.

(5) Multiple Device Markings will be inside parentheses. Only one Device Marking contained in parentheses and separated by a "~" will appear on a device. If a line is indented then it is a continuation of the previous line and the two combined represent the entire Device Marking for that device.

(6) Lead finish/Ball material - Orderable Devices may have multiple material finish options. Finish options are separated by a vertical ruled line. Lead finish/Ball material values may wrap to two lines if the finish value exceeds the maximum column width.

Important Information and Disclaimer: The information provided on this page represents TI's knowledge and belief as of the date that it is provided. TI bases its knowledge and belief on information provided by third parties, and makes no representation or warranty as to the accuracy of such information. Efforts are underway to better integrate information from third parties. TI has taken and continues to take reasonable steps to provide representative and accurate information but may not have conducted destructive testing or chemical analysis on incoming materials and chemicals. TI and TI suppliers consider certain information to be proprietary, and thus CAS numbers and other limited information may not be available for release.

In no event shall TI's liability arising out of such information exceed the total purchase price of the TI part(s) at issue in this document sold by TI to Customer on an annual basis.

OTHER QUALIFIED VERSIONS OF TPS61222 :

- Enhanced Product: TPS61222-EP

NOTE: Qualified Version Definitions:

- Enhanced Product - Supports Defense, Aerospace and Medical Applications

TAPE AND REEL INFORMATION

REEL DIMENSIONS

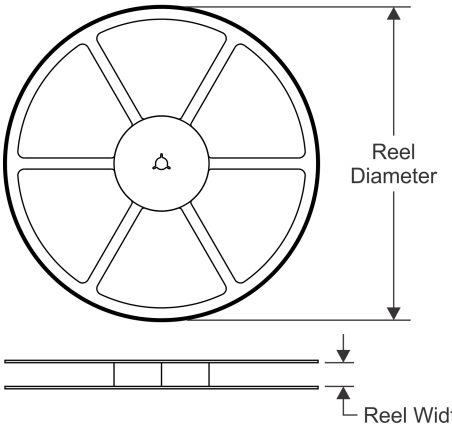

TAPE DIMENSIONS

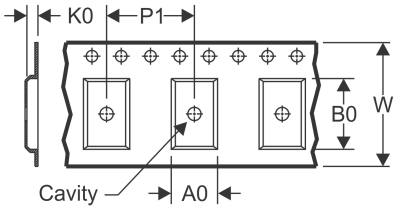

A0	Dimension designed to accommodate the component width
B0	Dimension designed to accommodate the component length
K0	Dimension designed to accommodate the component thickness
W	Overall width of the carrier tape
P1	Pitch between successive cavity centers

QUADRANT ASSIGNMENTS FOR PIN 1 ORIENTATION IN TAPE

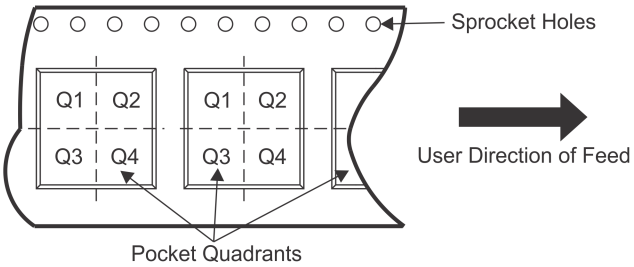

*All dimensions are nominal

Device	Package Type	Package Drawing	Pins	SPQ	Reel Diameter (mm)	Reel Width W1 (mm)	A0 (mm)	B0 (mm)	K0 (mm)	P1 (mm)	W (mm)	Pin1 Quadrant
TPS61220DCKR	SC70	DCK	6	3000	179.0	8.4	2.2	2.5	1.2	4.0	8.0	Q3
TPS61220DCKR	SC70	DCK	6	3000	178.0	9.0	2.4	2.5	1.2	4.0	8.0	Q3
TPS61220DCKT	SC70	DCK	6	250	178.0	9.0	2.4	2.5	1.2	4.0	8.0	Q3
TPS61220DCKT	SC70	DCK	6	250	179.0	8.4	2.2	2.5	1.2	4.0	8.0	Q3
TPS61221DCKR	SC70	DCK	6	3000	178.0	9.0	2.4	2.5	1.2	4.0	8.0	Q3
TPS61221DCKR	SC70	DCK	6	3000	179.0	8.4	2.2	2.5	1.2	4.0	8.0	Q3
TPS61221DCKT	SC70	DCK	6	250	179.0	8.4	2.2	2.5	1.2	4.0	8.0	Q3
TPS61221DCKT	SC70	DCK	6	250	178.0	9.0	2.4	2.5	1.2	4.0	8.0	Q3
TPS61222DCKR	SC70	DCK	6	3000	179.0	8.4	2.2	2.5	1.2	4.0	8.0	Q3
TPS61222DCKR	SC70	DCK	6	3000	178.0	9.0	2.4	2.5	1.2	4.0	8.0	Q3
TPS61222DCKT	SC70	DCK	6	250	178.0	9.0	2.4	2.5	1.2	4.0	8.0	Q3
TPS61222DCKT	SC70	DCK	6	250	179.0	8.4	2.2	2.5	1.2	4.0	8.0	Q3

TAPE AND REEL BOX DIMENSIONS

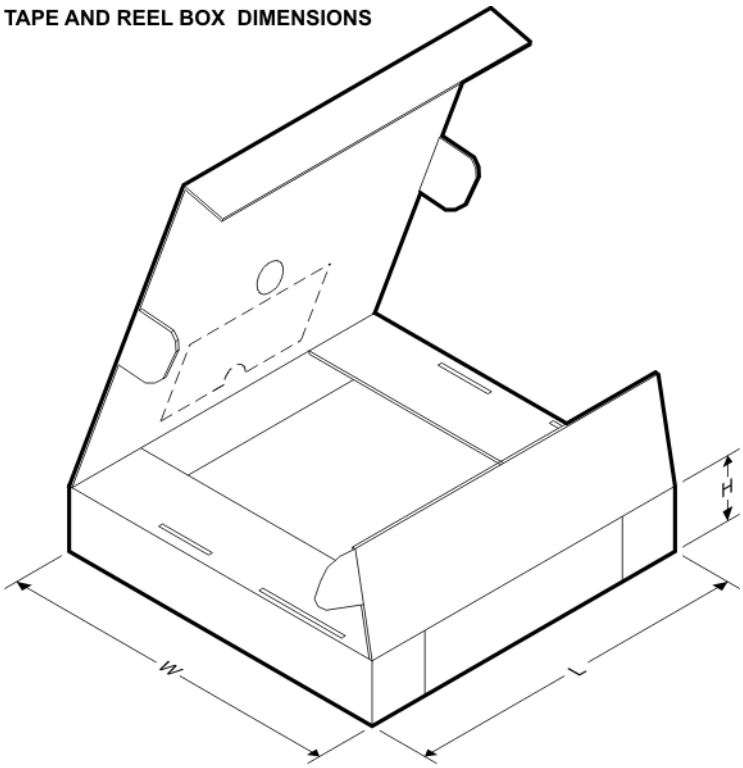

*All dimensions are nominal

Device	Package Type	Package Drawing	Pins	SPQ	Length (mm)	Width (mm)	Height (mm)
TPS61220DCKR	SC70	DCK	6	3000	200.0	183.0	25.0
TPS61220DCKR	SC70	DCK	6	3000	180.0	180.0	18.0
TPS61220DCKT	SC70	DCK	6	250	180.0	180.0	18.0
TPS61220DCKT	SC70	DCK	6	250	200.0	183.0	25.0
TPS61221DCKR	SC70	DCK	6	3000	180.0	180.0	18.0
TPS61221DCKR	SC70	DCK	6	3000	200.0	183.0	25.0
TPS61221DCKT	SC70	DCK	6	250	200.0	183.0	25.0
TPS61221DCKT	SC70	DCK	6	250	180.0	180.0	18.0
TPS61222DCKR	SC70	DCK	6	3000	200.0	183.0	25.0
TPS61222DCKR	SC70	DCK	6	3000	180.0	180.0	18.0
TPS61222DCKT	SC70	DCK	6	250	180.0	180.0	18.0
TPS61222DCKT	SC70	DCK	6	250	203.0	203.0	35.0

DCK (R–PDSO–G6) PLASTIC SMALL–OUTLINE PACKAGE

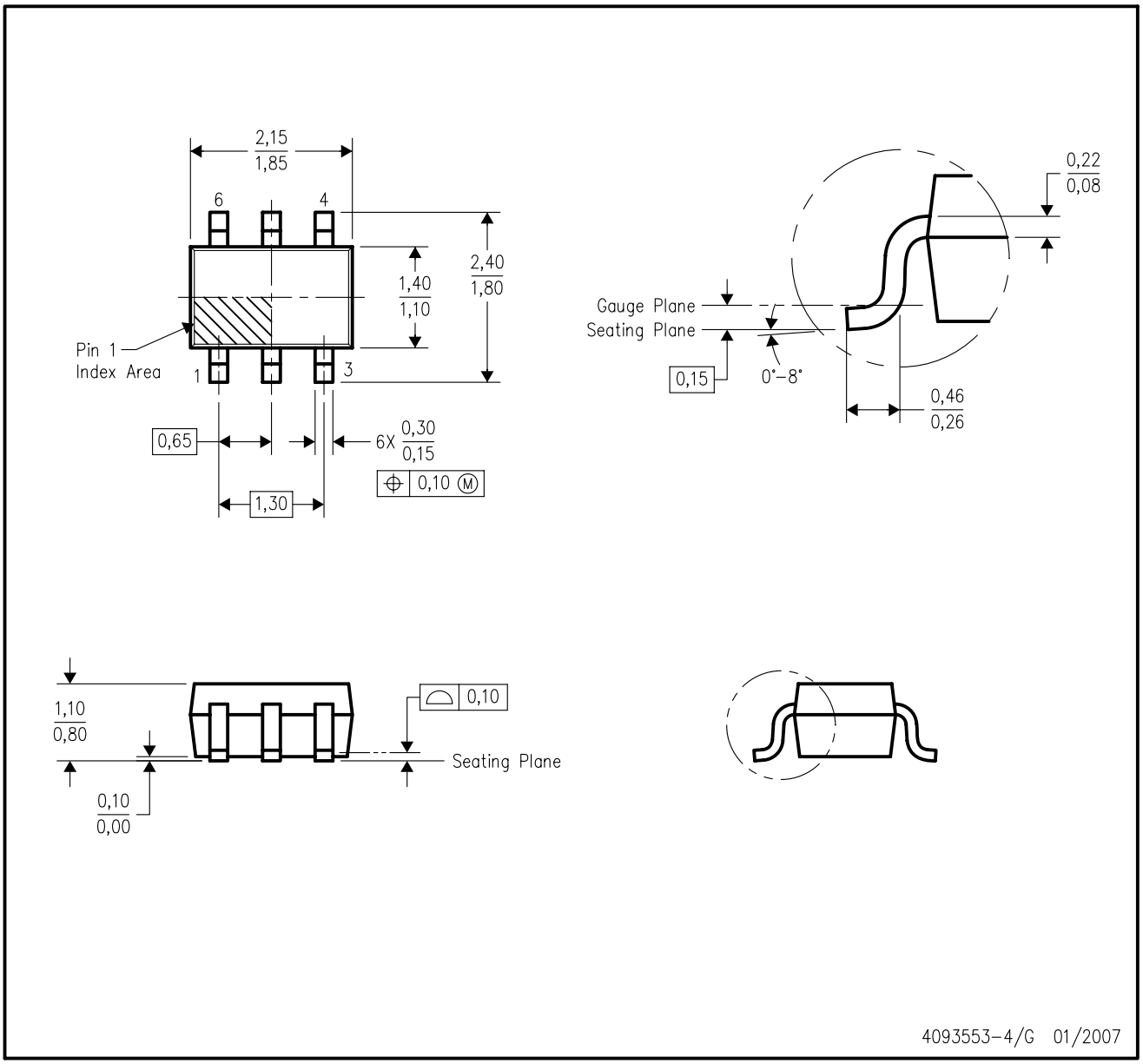

NOTES:
A. All linear dimensions are in millimeters.
B. This drawing is subject to change without notice.
C. Body dimensions do not include mold flash or protrusion. Mold flash and protrusion shall not exceed 0.15 per side.
D. Falls within JEDEC MO–203 variation AB.

DCK (R-PDSO-G6) PLASTIC SMALL OUTLINE

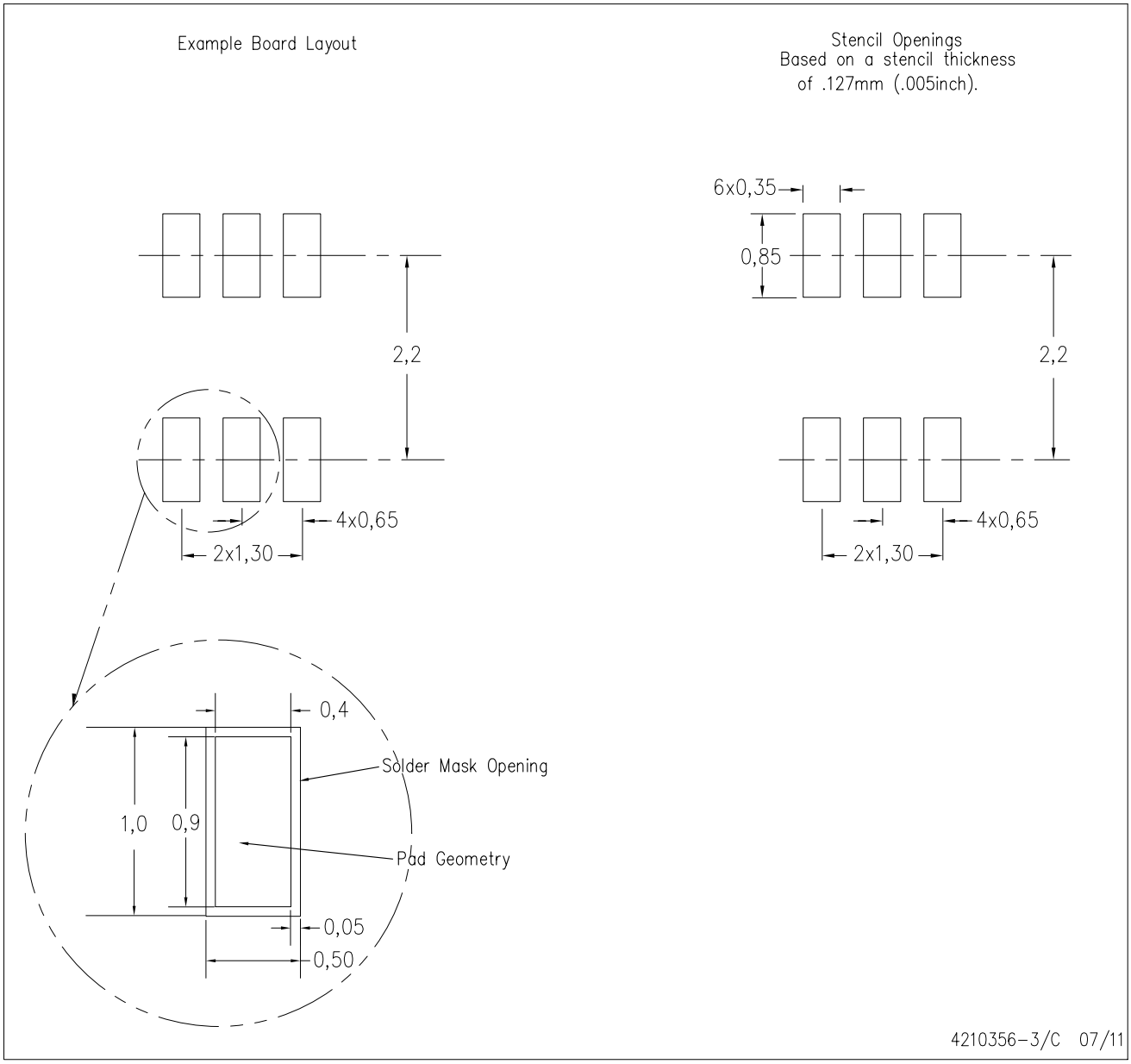

NOTES:
A. All linear dimensions are in millimeters.
B. This drawing is subject to change without notice.
C. Customers should place a note on the circuit board fabrication drawing not to alter the center solder mask defined pad.
D. Publication IPC-7351 is recommended for alternate designs.
E. Laser cutting apertures with trapezoidal walls and also rounding corners will offer better paste release. Customers should contact their board assembly site for stencil design recommendations. Example stencil design based on a 50% volumetric metal load solder paste. Refer to IPC-7525 for other stencil recommendations.

IMPORTANT NOTICE AND DISCLAIMER

TI PROVIDES TECHNICAL AND RELIABILITY DATA (INCLUDING DATASHEETS), DESIGN RESOURCES (INCLUDING REFERENCE DESIGNS), APPLICATION OR OTHER DESIGN ADVICE, WEB TOOLS, SAFETY INFORMATION, AND OTHER RESOURCES “AS IS” AND WITH ALL FAULTS, AND DISCLAIMS ALL WARRANTIES, EXPRESS AND IMPLIED, INCLUDING WITHOUT LIMITATION ANY IMPLIED WARRANTIES OF MERCHANTABILITY, FITNESS FOR A PARTICULAR PURPOSE OR NON-INFRINGEMENT OF THIRD PARTY INTELLECTUAL PROPERTY RIGHTS.

These resources are intended for skilled developers designing with TI products. You are solely responsible for (1) selecting the appropriate TI products for your application, (2) designing, validating and testing your application, and (3) ensuring your application meets applicable standards, and any other safety, security, or other requirements. These resources are subject to change without notice. TI grants you permission to use these resources only for development of an application that uses the TI products described in the resource. Other reproduction and display of these resources is prohibited. No license is granted to any other TI intellectual property right or to any third party intellectual property right. TI disclaims responsibility for, and you will fully indemnify TI and its representatives against, any claims, damages, costs, losses, and liabilities arising out of your use of these resources.

TI’s products are provided subject to TI’s Terms of Sale (https:www.ti.com/legal/termsofsale.html) or other applicable terms available either on ti.com or provided in conjunction with such TI products. TI’s provision of these resources does not expand or otherwise alter TI’s applicable warranties or warranty disclaimers for TI products.

Mailing Address: Texas Instruments, Post Office Box 655303, Dallas, Texas 75265
Copyright © 2021, Texas Instruments Incorporated