TPS61378-Q1 具有负载断开功能的 25µA 静态电流同步升压转换器

1 特性

- 符合面向汽车应用的 AEC-Q100 标准
  - 器件温度等级 1：-40°C 至 125°C 环境工作温度范围
- 提供功能安全
  - 可帮助进行功能安全系统设计的文档
- 灵活的输入和输出工作范围
  - 输入电压范围：2.3V 至 14V
  - 可编程输出电压范围：4.0V 至 18.5V
  - 固定输出选项：5V、5.25V 和 5.5V
  - 可编程峰值电流限制：1 A 至 4.8 A
- 避免 AM 频带干扰和串扰
  - 动态可编程开关频率：200kHz 至 2.2MHz
  - 扩频调频
  - 可选的时钟同步
- 尽量减小解决方案尺寸，用于空间受限型应用
  - 集成式 LS/HS/ISO FET：$R_{DS(ON)}$ 50mΩ/50mΩ/100mΩ
  - 支持高达 2.2MHz，L-C 较小
- 尽量减少轻负载和空闲状态的电流消耗
  - VIN 引脚静态电流为 25µA
  - VIN 引脚关断电流为 0.5µA
  - 可选择自动 PFM 和强制 PWM 模式
  - 关断期间或出现故障时真正负载断开连接
- 集成型保护特性
  - 支持接近 VOUT 运行电压的 VIN
  - 输入欠压锁定和输出过压保护
  - 断续输出短路保护
  - 电源正常状态指示器
  - 165°C 的热关断保护限制
- 0.8A 负载条件下进行 3.3V 至 9V 转换时效率高于 90%

2 应用

- 高级驾驶辅助系统 (ADAS)
- 汽车信息娱乐系统与仪表组
- 车身电子装置和照明
- 紧急呼叫 (eCall)

3 说明

TPS61378-Q1 是一款完全集成的同步升压转换器，集成了负载断开功能。输入电压范围从 2.3V 到 14V，最大输出电压高达 18.5V。可编程的开关电流限制范围为 1A 至 4.8A。该器件在 V_{IN} 条件下消耗 25µA 的静态电流。

TPS61378-Q1 采用峰值电流模式控制，可编程开关频率范围为 200kHz 到 2.2MHz。在中等到重负载条件下，该器件在固定频率 PWM 模式下运行。在轻负载条件下，通过配置 MODE 引脚可实现两种可选模式：自动 PFM 模式和强制 PWM 模式，以便在轻负载条件下实现效率和抗噪性平衡。可与外部时钟同步开关频率。TPS61378-Q1 使用内部时钟展频，可在 FPWM 模式下实现低电磁干扰。此外，还有内部软启动时间来限制浪涌电流。

TPS61378-Q1 有多种固定输出电压版本，可节省外部反馈电阻器。它支持外部环路补偿，在更广泛的 V_{OUT}/V_{IN} 范围内优化稳定性和瞬态响应。它还集成了稳健的保护特性，包括输出短路保护、输出过压保护和热关断保护。TPS61378-Q1 采用具有可湿性侧面的 3mm × 3mm 16 引脚 QFN 封装。

器件信息

器件型号	封装(1)	封装尺寸（标称值）
TPS61378-Q1	VQFN-16	3.0mm × 3.0mm

(1) 如需了解所有可用封装，请参阅数据表末尾的可订购产品附录。

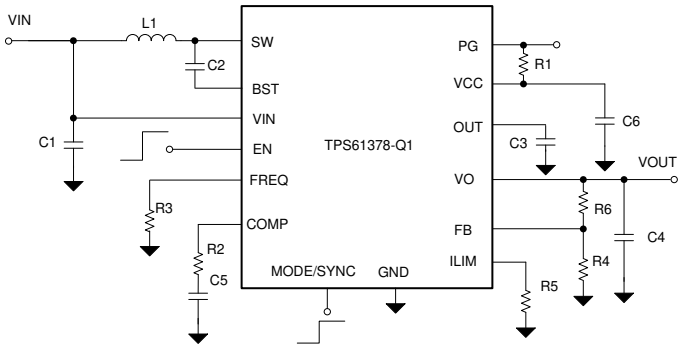

典型应用

本文档旨在为方便起见，提供有关 TI 产品中文版本的信息，以确认产品的概要。有关适用的官方英文版本的最新信息，请访问 www.ti.com，其内容始终优先。TI 不保证翻译的准确性和有效性。在实际设计之前，请务必参考最新版本的英文版本。

Table of Contents

1 特性 ... 1
2 应用 ... 1
3 说明 ... 1
4 Revision History ... 2
5 Device Comparison Table ... 3
6 Pin Configuration and Functions ... 4
7 Specifications ... 5
7.1 Absolute Maximum Ratings ... 5
7.2 ESD Ratings ... 5
7.3 Recommended Operating Conditions ... 5
7.4 Thermal Information ... 5
7.5 Electrical Characteristics ... 6
7.6 Typical Characteristics ... 8
8 Detailed Description ... 11
8.1 Overview ... 11
8.2 Functional Block Diagram ... 12
8.3 Feature Description ... 12
8.4 Device Functional Modes ... 14
9 Application and Implementation ... 16
9.1 Application Information ... 16
9.2 Typical Application ... 16
10 Power Supply Recommendations ... 25
11 Layout ... 26
11.1 Layout Guidelines ... 26
11.2 Layout Example ... 26
12 Device and Documentation Support ... 27
12.1 Device Support ... 27
12.2 接收文档更新通知 ... 27
12.3 支持资源 ... 27
12.4 Trademarks ... 27
12.5 术语表 ... 27
12.6 Electrostatic Discharge Caution ... 27
13 Mechanical, Packaging, and Orderable Information ... 27

4 Revision History

Changes from Revision C (June 2021) to Revision D (October 2021) — **Page**

- Replaced the operating ambient temperature with the operating junction temperature and added table note in 节 7.3 ... 5
- Updated 节 8.3.13 ... 14
- Updated 图 9-2 ... 20

Changes from Revision B (February 2021) to Revision C (June 2021) — **Page**

- Updated resistor from FB to GND values ... 3
- Updated voltage reference specifications ... 6
- Updated 节 9.2.2.1 ... 16

Changes from Revision A (October 2020) to Revision B (February 2021) — **Page**

- Added TPS613783-Q1 and TPS613785-Q1 variants to data sheet ... 6

Changes from Revision * (May 2020) to Revision A (October 2020) — **Page**

- 将 TPS61378-Q1 器件状态从“预告信息”更改为“量产数据” ... 1
- 更新了整个文档中的表、图和交叉参考的编号格式 ... 1

Copyright © 2021 Texas Instruments Incorporated

5 Device Comparison Table

PART NUMBER	OUTPUT VOLTAGE (V)	RESISTOR FROM FB TO GND (R_{FB_LOW})	SPREAD SPECTRUM
TPS61378-Q1	5	$0\Omega \leqslant R_{FB_LOW} \leqslant 2.4\ k\Omega$	Enable
	5.25	$3.6k\Omega \leqslant R_{FB_LOW} \leqslant 4.8k\Omega$	
	5.5	$7.2k\Omega \leqslant R_{FB_LOW} \leqslant 9.6k\Omega$	
	Adjustable	$14.4k\Omega \leqslant R_{FB_LOW} \leqslant 100k\Omega$	
TPS613781-Q1(1)	5.7	$0\Omega \leqslant R_{FB_LOW} \leqslant 2.4\ k\Omega$	Enable
	6.2	$3.6k\Omega \leqslant R_{FB_LOW} \leqslant 4.8k\Omega$	
	7	$7.2k\Omega \leqslant R_{FB_LOW} \leqslant 9.6k\Omega$	
	8	$14.4k\Omega \leqslant R_{FB_LOW} \leqslant 100k\Omega$	
TPS613782-Q1(1)	9	$0\Omega \leqslant R_{FB_LOW} \leqslant 2.4\ k\Omega$	Enable
	10	$3.6k\Omega \leqslant R_{FB_LOW} \leqslant 4.8k\Omega$	
	11	$7.2k\Omega \leqslant R_{FB_LOW} \leqslant 9.6k\Omega$	
	12	$14.4k\Omega \leqslant R_{FB_LOW} \leqslant 100k\Omega$	
TPS613783-Q1	5	$0\Omega \leqslant R_{FB_LOW} \leqslant 2.4\ k\Omega$	Disable
	5.25	$3.6k\Omega \leqslant R_{FB_LOW} \leqslant 4.8k\Omega$	
	5.5	$7.2k\Omega \leqslant R_{FB_LOW} \leqslant 9.6k\Omega$	
	Adjustable	$14.4k\Omega \leqslant R_{FB_LOW} \leqslant 100k\Omega$	
TPS613784-Q1(1)	5.7	$0\Omega \leqslant R_{FB_LOW} \leqslant 2.4\ k\Omega$	Disable
	6.2	$3.6k\Omega \leqslant R_{FB_LOW} \leqslant 4.8k\Omega$	
	7	$7.2k\Omega \leqslant R_{FB_LOW} \leqslant 9.6k\Omega$	
	8	$14.4k\Omega \leqslant R_{FB_LOW} \leqslant 100k\Omega$	
TPS613785-Q1	9	$0\Omega \leqslant R_{FB_LOW} \leqslant 2.4\ k\Omega$	Disable
	10	$3.6k\Omega \leqslant R_{FB_LOW} \leqslant 4.8k\Omega$	
	11	$7.2k\Omega \leqslant R_{FB_LOW} \leqslant 9.6k\Omega$	
	12	$14.4k\Omega \leqslant R_{FB_LOW} \leqslant 100k\Omega$	

(1) Product Preview. Contact TI factory for more information.

Copyright © 2021 Texas Instruments Incorporated

6 Pin Configuration and Functions

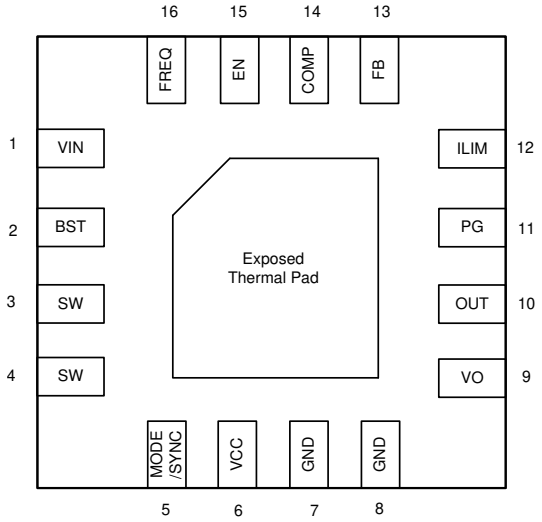

图 6-1. 16-Pin WQFN RTE Package (Transparent Top View)

表 6-1. Pin Functions

PIN		I/O	DESCRIPTION
NAME	NO.		
VIN	1	I	IC power supply input
BST	2	I	Power supply for high-side N-MOSFET gate drivers. A capacitor must be connected between this pin and the SW pin.
SW	3, 4	PWR	The switching node pin of the converter. It is connected to the drain of the internal low-side FET and the source of the high-side FET.
MODE/SYNC	5	I	Mode selection pin. MODE = high, forced PWM mode MODE = low or floating, auto PFM mode This pin can also be used to synchronize the external clock. Refer to 表 8-1 for details.
VCC	6	O	Output of internal regulator. A ceramic capacitor with more than 1 μF must be connected between this pin and GND.
GND	7, 8	PWR	Power ground of the IC. It is connected to the source of the low-side FET.
VO	9	PWR	Output of the isolation FET. Connect load to this pin to achieve input/output isolation.
OUT	10	PWR	Output of the drain of the HS FET. Connect this pin because the output can disable the load disconnect/short protection feature (or short this pin with the VO pin).
PG	11	O	Power good indicator and open drain output
ILIM	12	I	Current limit setting pin. Use a resistor to set the desired peak current limit. Refer to *节 8.3.7* for details.
FB	13	I	Feedback pin. Use a resistor divider to set the desired output voltage. Refer to *节 9.2.2.1* for details.
COMP	14	I	Output of the internal transconductance error amplifier. An external RC network is connected to this pin to optimize the loop stability and response time.
EN	15	I	Enable logic input
FREQ	16	I	Frequency setting pin. Connect a resistor between this pin and GND pin to set the desired frequency.
Thermal Pad	-	-	The thermal pad must be connected to the power ground plane for good power dissipation.

Copyright © 2021 Texas Instruments Incorporated

7 Specifications

7.1 Absolute Maximum Ratings

over operating free-air temperature range (unless otherwise noted)(1)

		MIN	MAX	UNIT
Voltage range at terminals (2)	VIN	-0.3	16	V
Voltage range at terminals (2)	VO, SW, OUT	– 0.3	23	V
	BST	– 0.3	SW + 6	V
	MODE/SYNC, FB, FREQ, ILIM, VCC, COMP, EN	– 0.3	6	V
	PG	-0.3	20	V
T_J (3)	Operating junction temperature	– 40	150	°C
T_{stg}	Storage temperature	– 65	150	°C

(1) Stresses beyond those listed under *Absolute Maximum Ratings* may cause permanent damage to the device. These are stress ratings only, which do not imply functional operation of the device at these or any other conditions beyond those indicated under *Recommended Operating Conditions*. Exposure to absolute-maximum-rated conditions for extended periods may affect device reliability.
(2) All voltage values are with respect to network ground terminal.
(3) High junction temperatures degrade operating lifetime. Operating lifetime is de-rated for junction temperatures greater than 125°C

7.2 ESD Ratings

			VALUE	UNIT
$V_{(ESD)}$ (1)	Electrostatic discharge	Human-body model (HBM), per AEC Q100-002(2)	±2000	V
		Charged-device model (CDM), per AEC Q100-011, all pins(3)	±500	
$V_{(ESD)}$ (1)	Electrostatic discharge	Charged-device model (CDM), per AEC Q100-011, corner pins (1,4,5,8,9,12,13,16)(3)	±750	V

(1) Electrostatic discharge (ESD) to measure device sensitivity and immunity to damage caused by assembly line electrostatic discharges in to the device.
(2) Level listed above is the passing level per ANSI, ESDA, and JEDEC JS-001. JEDEC document JEP155 states that 500-V HBM allows safe manufacturing with a standard ESD control process. Manufacturing with less than 500-V HBM is possible with the necessary precautions.
(3) Level listed above is the passing level per EIA-JEDEC JESD22-C101. JEDEC document JEP157 states that 250-V CDM allows safe manufacturing with a standard ESD control process. Manufacturing with less than 250-V CDM is possible with the necessary precautions.

7.3 Recommended Operating Conditions

over operating free-air temperature range (unless otherwise noted)

		MIN	NOM	MAX	UNIT
V_{IN}	Input voltage	2.3		14	V
V_{OUT}	Outputvoltage	4		18.5	V
T_J	Operating junction temperature(1)	– 40		150	°C

(1) High junction temperatures degrade operating lifetimes. Operating lifetime is de-rated for junction temperatures greater than 125°C.

7.4 Thermal Information

THERMAL METRIC(1)		TPS61378-Q1 RTE 16 PINS	UNIT
$R_{\theta JA}$	Junction-to-ambient thermal resistance	46.2	°C/W
$R_{\theta JC(top)}$	Junction-to-case (top) thermal resistance	43.5	°C/W
$R_{\theta JB}$	Junction-to-board thermal resistance	18.5	°C/W
ψ_{JT}	Junction-to-top characterization parameter	1.1	°C/W
ψ_{JB}	Junction-to-board characterization parameter	18.5	°C/W

Copyright © 2021 Texas Instruments Incorporated

THERMAL METRIC(1)		TPS61378-Q1 RTE 16 PINS	UNIT
$R_{\theta JC(bot)}$	Junction-to-case (bottom) thermal resistance	8.8	°C/W

(1) For more information about traditional and new thermal metrics, see the *Semiconductor and IC Package Thermal Metrics* application report, SPRA953.

7.5 Electrical Characteristics

T_J = -40 to 125°C, L = 1 µH, V_{IN} = 3.3 V and V_{OUT} = 9 V (VO pin). Typical values are at T_J = 25°C, (unless otherwise noted)

PARAMETER		TEST CONDITIONS	MIN	TYP	MAX	UNIT
POWER SUPPLY						
V_{IN}	Input voltage range		2.3		14	V
V_{IN_UVLO}	VIN under voltage lockout threshold	V_{IN} rising		2.2	2.3	V
		V_{IN} falling		2.04	2.2	V
V_{IN_HYS}	VIN UVLO hysteresis			160		mV
V_{CC_UVLO}	VCC UVLO threshold	V_{CC} rising		2.2		V
V_{CC_HYS}	VCC UVLO hysteresis	V_{CC} hysteresis		150		mV
V_{CC}	VCC regulation	I_{VCC} = 6 mA, V_{OUT} = 9V		4.8		V
I_Q	Quiescent current into V_{IN} pin	IC enabled, no load, V_{IN} = 3.3 V, V_{OUT} = 18.5 V, V_{FB} = V_{REF} + 0.1 V,		25	35	µA
I_Q	Quiescent current into OUT pin	IC enabled, no load, V_{IN} = 3.3 V, V_{OUT} = 18.5 V, V_{FB} = V_{REF} + 0.1 V,		10	20	µA
I_{SD}	Shutdown current into VIN pin	IC disabled, V_{IN} =14 V, EN = GND		0.6	5	µA
I_{SW_LKG}	Leakage current into SW	IC disabled, V_{IN} = OUT = SW =14 V			5	µA
I_{VO_LKG}	Reverse leakage current into VO	IC disabled, OUT= VO = 5 V, SW = 0			5	µA
OUTPUT VOLTAGE						
V_{OVP}	Output over-voltage protection threshold	V_{IN} = 3.3 V, V_{OUT} rising	19.3	20	20.5	V
V_{OVP_HYS}	Output over-voltage protection hysteresis	V_{IN} = 3.3 V, OVP threshold		0.5		V
VOLTAGE REFERENCE						
V_{REF}	Reference Voltage at FB pin	T_J = -40 to 125°C, R_{FB} = 16.0kΩ	0.788	0.800	0.812	V
V_{OUT_5V}		T_J = -40 to 125°C, R_{FB} = 2.0 kΩ	4.85	5.00	5.15	V
$V_{OUT_5.25V}$		T_J = -40 to 125°C, R_{FB} = 4.0 kΩ	5.10	5.25	5.35	V
$V_{OUT_5.5V}$		T_J = -40 to 125°C, R_{FB} = 8.0 kΩ	5.35	5.50	5.65	V
V_{OUT_5V}		TPS613783Q1, T_J = -40 to 125°C, R_{FB} = 2.0 kΩ	4.85	5.00	5.15	V
$V_{OUT_5.25V}$		TPS613783Q1, T_J = -40 to 125°C, R_{FB} = 4.0 kΩ	5.10	5.25	5.35	V
$V_{OUT_5.5V}$		TPS613783Q1, T_J = -40 to 125°C, R_{FB} = 8.0 kΩ	5.35	5.50	5.65	V
V_{OUT_9V}		TPS613785Q1, T_J = -40 to 125°C, R_{FB} = 2.0 kΩ	8.75	9.00	9.15	V
V_{OUT_10V}		TPS613785Q1, T_J = -40 to 125°C, R_{FB} = 4.0 kΩ	9.75	10.00	10.20	V
V_{OUT_11V}		TPS613785Q1, T_J = -40 to 125°C, R_{FB} = 8.0 kΩ	10.70	11.00	11.20	V
V_{OUT_12V}		TPS613785Q1, T_J = -40 to 125°C, R_{FB} = 16.0 kΩ	11.70	12.00	12.22	V
I_{FB_LKG}	Leakage current into FB pin				50	nA
POWER SWITCH						
$R_{DS(on)}$	Low-side MOSFET on resistance	V_{CC} = 4.85 V		50		mΩ
$R_{DS(on)}$	High-side MOSFET on resistance	V_{CC} = 4.85 V		50		mΩ
$R_{DS(on)}$	Isolation MOSFET on resistance	V_{CC} = 4.85 V		100		mΩ

Copyright © 2021 Texas Instruments Incorporated

T_J = -40 to 125°C, L = 1 µH, V_{IN} = 3.3 V and V_{OUT} = 9 V (VO pin). Typical values are at T_J = 25°C, (unless otherwise noted)

PARAMETER		TEST CONDITIONS	MIN	TYP	MAX	UNIT
CURRENT LIMIT						
I_{LIM_SW}	Peak switching current limit FPWM	R_{LIM} = 20 kΩ , Duty cycle = 65%	4	4.8	5.55	A
I_{LIM_SW}	Peak switching current limit Auto PFM	R_{LIM} = 20 kΩ , Duty cycle = 65%	4	4.8	5.55	A
I_{LIM_SW}	Peak switching current limit FPWM	R_{LIM} = 102 kΩ , Duty cycle = 65%, 4.7uH		0.75		A
I_{LIM_SW}	Peak switching current limit Auto PFM	R_{LIM} = 102 kΩ , Duty cycle = 65%, 4.7uH		0.75		A
$I_{LIM_SS_1}$	Peak switching current limit at softstart	V_{IN} = 3.3 V, V_{OUT} = 0 V, R_{LIM} = 20 kΩ	0.9	1.15	1.4	A
SWITCHING FREQUENCY						
Fsw	Switching frequency	R_{FREQ} = 18 kΩ	2050	2200	2400	kHz
Fsw	Switching frequency	R_{FREQ} = 218 kΩ	180	200	230	kHz
D_{max}	Maximum Duty Cycle	R_{FREQ} = 18 kΩ	78			%
t_{ON_min}	Minimal on time			70		ns
F_{DITHER}				10%		Fsw
$F_{pattern}$				0.4%		Fsw
ERROR AMPLIFIER						
I_{SINK}	COMP pin sink current	V_{FB} = V_{REF} + 0.2V		6		uA
I_{SOURCE}	COMP pin source current	V_{FB} = V_{REF} - 0.2V		6		uA
V_{CCLPH}	COMP pin high clamp voltage	V_{FB} = V_{REF} - 0.2V, ILIM = 4.8 A		1.3		V
V_{CCLPL}	COMP pin high low voltage	V_{FB} = V_{REF} + 0.2V,		0.6		V
G_{mEA}	Error amplifier trans conductance	V_{COMP} = 1.0 V		70		uS
POWER GOOD						
V_{PG_TH}	PG threhold for rising FB voltage	Reference to V_{REF}		90%		
V_{PG_HYS}	PG hysteresis	Reference to V_{REF}		5%		
I_{PG_SINK}	PG pin sink current capability	V_{PG} = 0.4 V		20		mA
t_{PG_DELAY}	PG delay time		2.5	3.4	4.3	ms
DOWN MODE						
t_{EN_DELAY}	Delay time between EN high and device working			0.4		ms
t_{SS}	Softstart time			2.5		ms
t_{HCP_ON}	Hiccup on time			1.8		ms
t_{HCP_OFF}	Hiccup off time			67		ms
SYNC TIMING						
f_{SYNC_MIN}				200		kHz
f_{SYNC_MAX}				2200		kHz
EN/SYNC LOGIC						
VI_H	EN, MODE/SYNC pins Logic high threshold				1.2	V
VI_L	EN, MODE/SYNC pins Logic Low threshold		0.4			V
R_{DOWN}	EN, MODE/SYNC pins internal pull down resistor			800		kΩ
THERMAL SHUTDOWN						
t_{SD_R}	Thermal shutdown rising threshold	TJ rising		165		°C
t_{SD_F}	Thermal shutdown falling threshold	TJ falling		145		°C

Copyright © 2021 Texas Instruments Incorporated

7.6 Typical Characteristics

V_{IN} = 3.3 V, V_{OUT} = 9 V (VO pin), T_A = 25°C, Fsw = 2.2 MHz, unless otherwise noted.

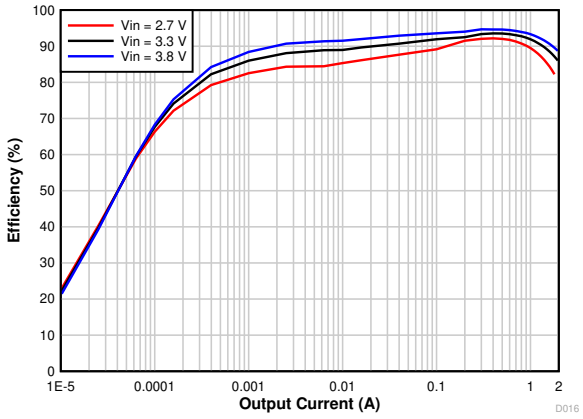

VOUT = 5 V Auto PFM Fsw = 2.2 MHz

图 7-1. 5 V_{OUT} Efficiency vs Output Current

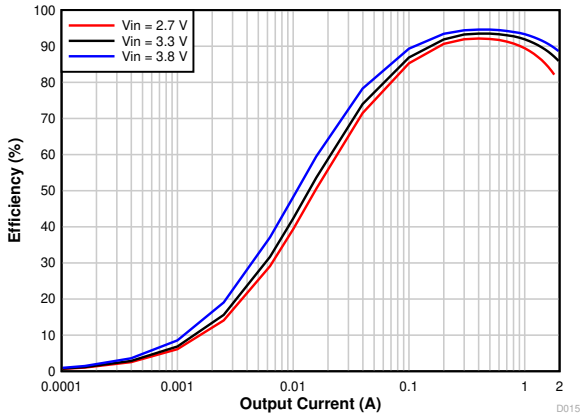

VOUT = 5 V FPWM Fsw = 2.2 MHz

图 7-2. 5 V_{OUT} Efficiency vs Output Current

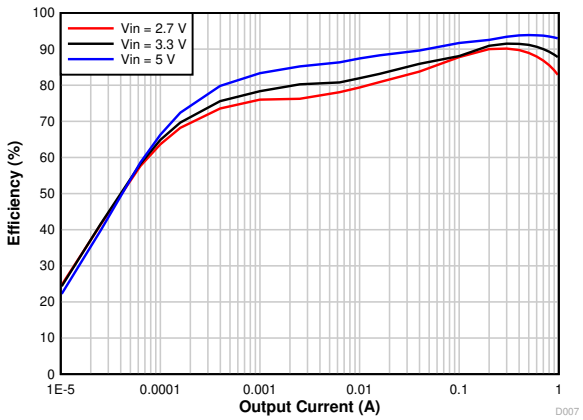

VOUT = 9 V Auto PFM Fsw = 2.2 MHz

图 7-3. 9 V_{OUT} Efficiency vs Output Current

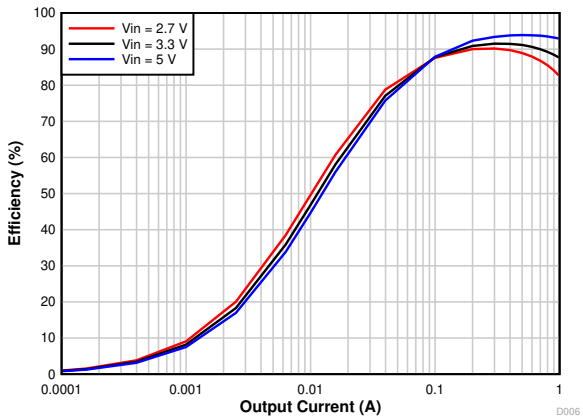

VOUT = 9 V FPWM Fsw = 2.2 MHz

图 7-4. 9 V_{OUT} Efficiency vs Output Current

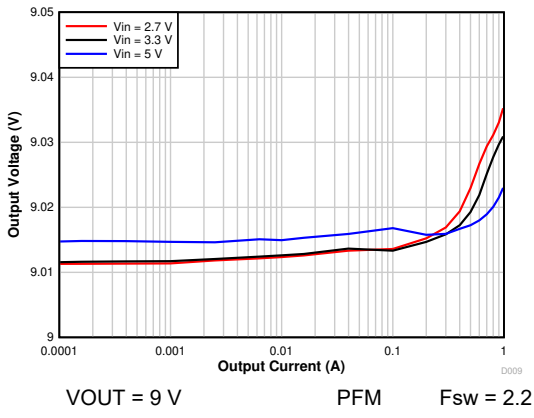

VOUT = 9 V PFM Fsw = 2.2 MHz

图 7-5. 9 V_{OUT} Regulation vs Output Current

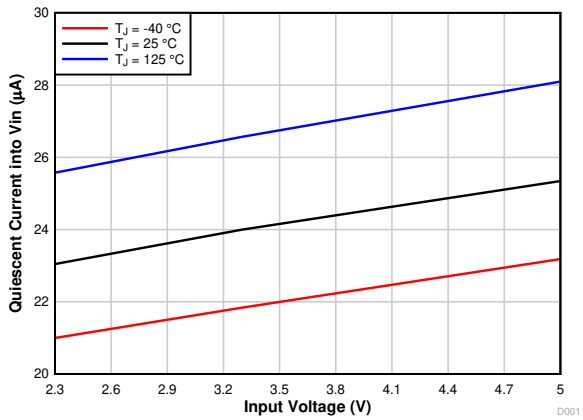

图 7-6. Quiescent Current into V_{IN} vs Input Voltage

Copyright © 2021 Texas Instruments Incorporated

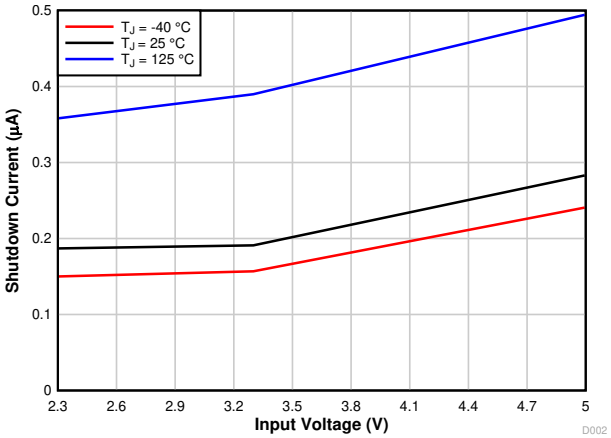

图 7-7. Shutdown Current vs Input Voltage

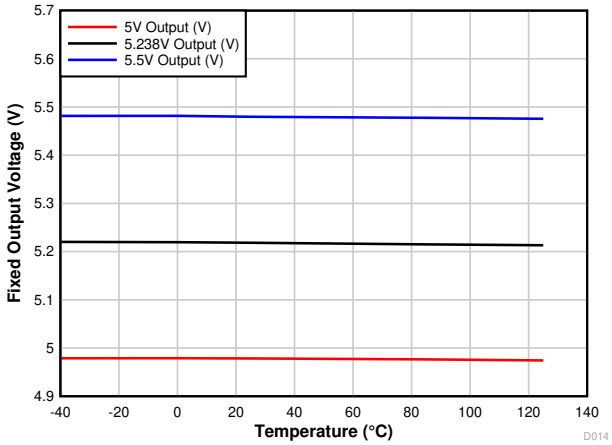

图 7-8. Fixed Output Voltage vs Temperature

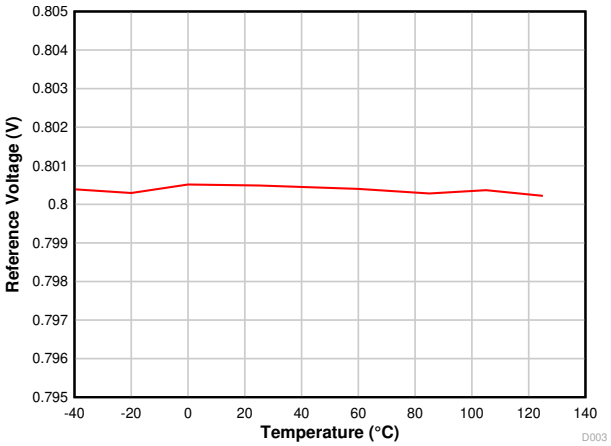

图 7-9. Reference Voltage vs Temperature

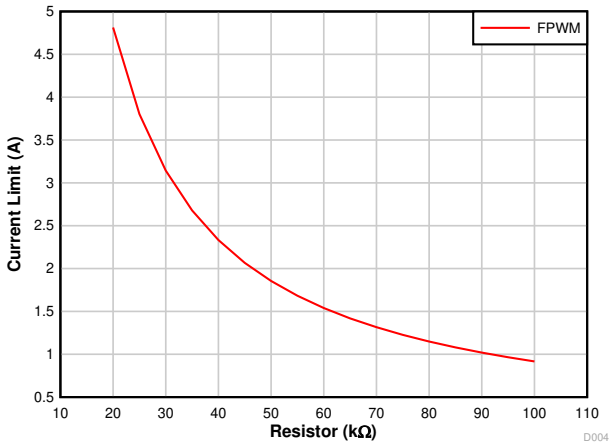

图 7-10. Current Limit vs Setting Resistance

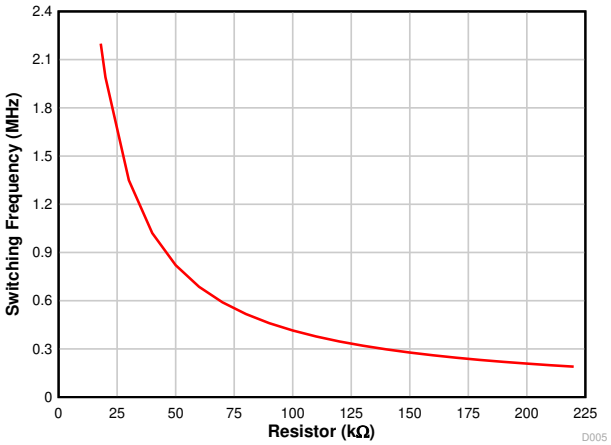

图 7-11. Switching Frequency vs Setting Resistance

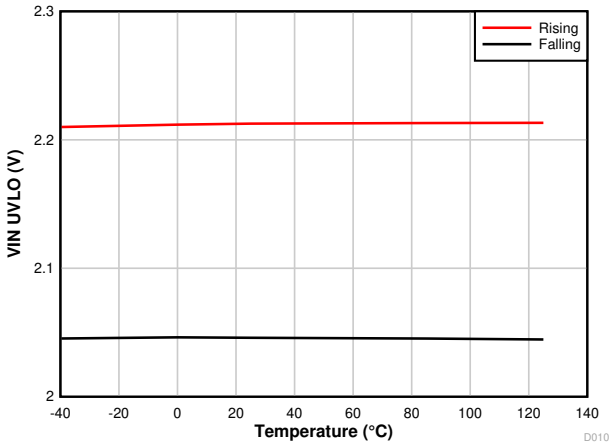

图 7-12. V_{IN} UVLO Threshold Voltage vs Temperature

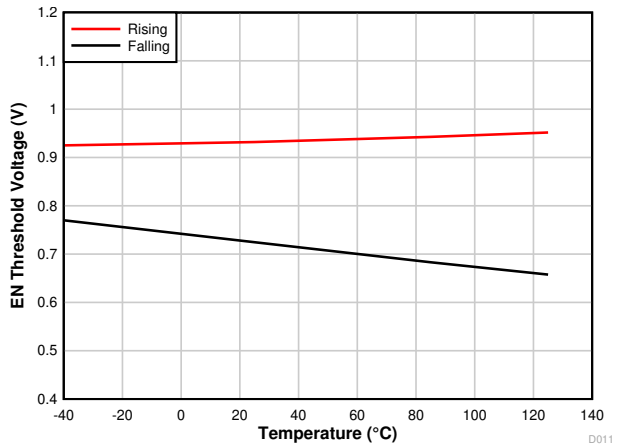

图 7-13. EN Threshold Voltage vs Temperature

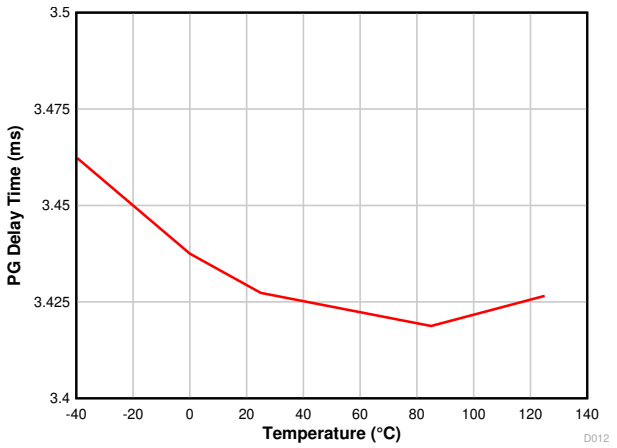

图 7-14. PG Delay Time vs Temperature

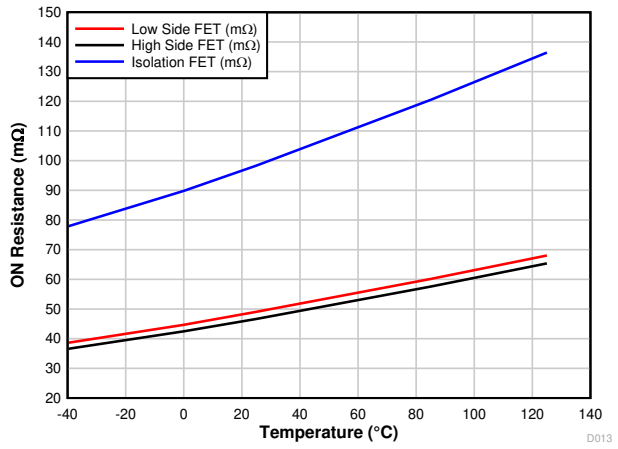

图 7-15. R_{DSON} vs Temperature

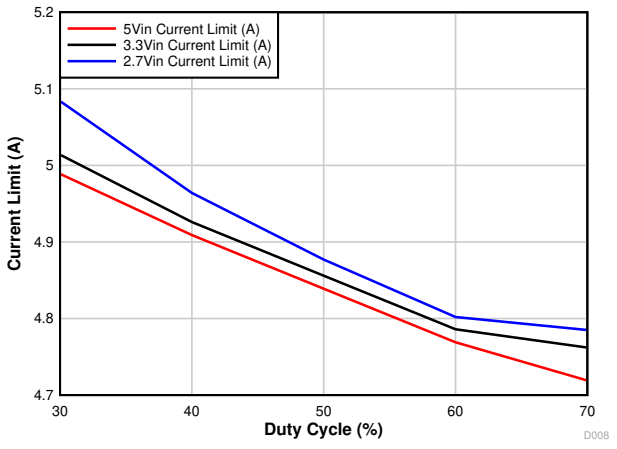

图 7-16. Duty Cycle vs Current Limit

Copyright © 2021 Texas Instruments Incorporated

8 Detailed Description

8.1 Overview

The TPS61378-Q1 is a fully-integrated synchronous boost converter with load disconnect function. It supports output voltage up to 18.5 V with a maximum of a 4.8-A programmable switching peak current limit. The input voltage ranges from 2.3 V to 14 V while consuming 25-µA quiescent current.

The TPS61378-Q1 utilizes the fixed-frequency peak current control scheme, which has an internal oscillator and supports adjustable switching frequency from 200 kHz to 2.2 MHz.

The TPS61378-Q1 operates with fixed-frequency pulse width modulation (PWM) from medium to heavy load. At the beginning of each switching cycle, the low-side N-MOSFET switch is turned on. The inductor current ramps up to a peak current that is determined by the output of the internal error amplifier (EA). Once the switching peak current triggers the output of the EA, the low-side N-MOSFET is turned off and the high-side N-MOSFET is turned on after a short dead time. The high-side N-MOSFET switch is not turned off until the next cycle as determined by the internal oscillator. The low-side switch turns on again after a short dead time and the switching cycle is repeated.

The TPS61378-Q1 provides either auto PFM or forced PWM for the light load operation by configuring the MODE/SYNC pin. In forced PWM mode, the switching frequency remains constant across the entire load range, which helps avoid frequency variation with load. The internal oscillator can be synchronized to an external clock applied on the MODE/SYNC pin. Spread spectrum modulation of the frequency in forced PWM mode helps optimize the EMI performance for automotive applications. In auto PFM mode, the switching frequency can decrease, resulting in higher efficiency.

The TPS61378-Q1 implements a cycle-by-cycle current limit to protect the device from overload during the boost operation phase. If the output current further increases and triggers the output voltage to fall below the input voltage, the TPS61378-Q1 enters into hiccup mode short protection.

There is a built-in soft-start time, which prevents the inrush current during the start-up. The TPS61378-Q1 also provides a power good (PG) indicator to enable the power sequence control for start-up.

The TPS61378-Q1 also has a number of protection features including output short protection, output overvoltage protection (OVP), and thermal shutdown protection (OTP).

Copyright © 2021 Texas Instruments Incorporated

8.2 Functional Block Diagram

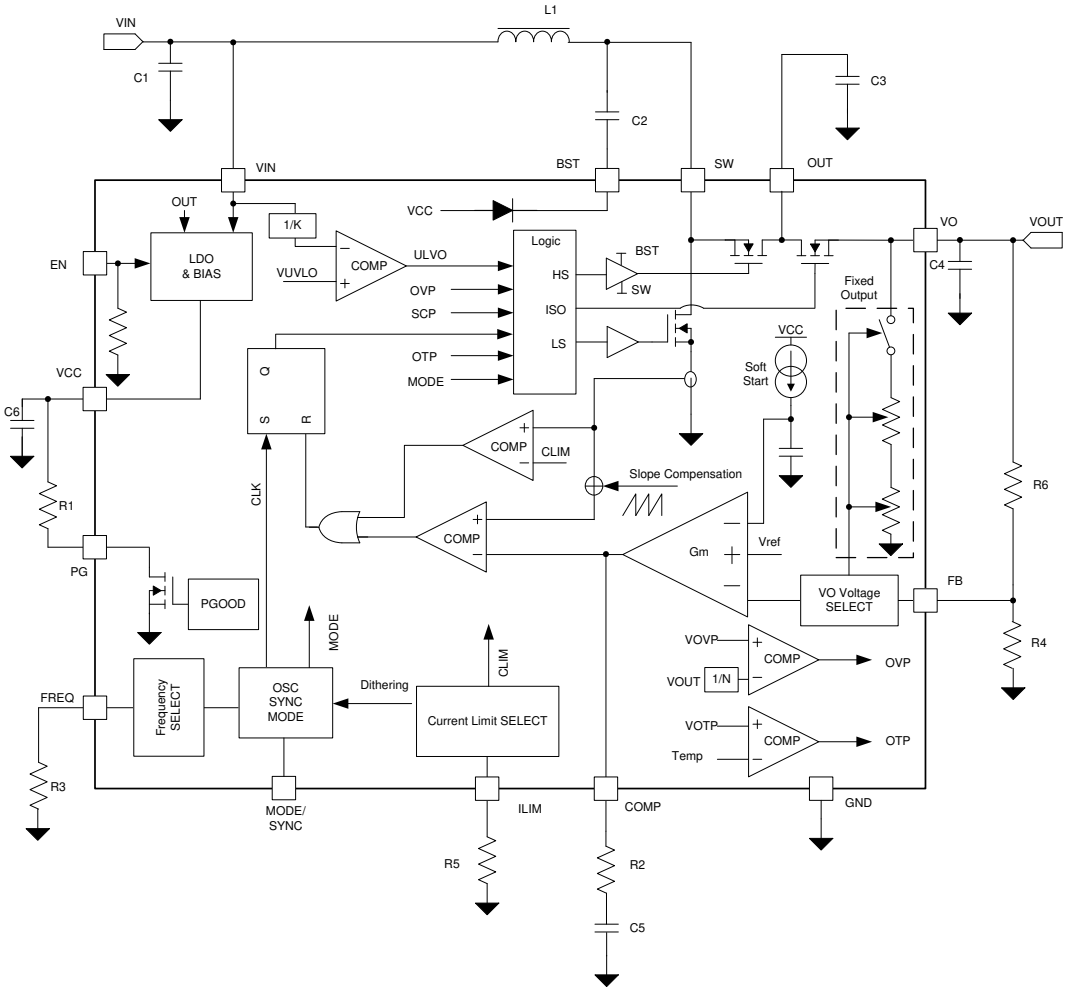

8.3 Feature Description

8.3.1 VCC Power Supply

The internal LDO in the TPS61378-Q1 outputs a regulated voltage of 4.8 V with 10-mA output current capability. A ceramic capacitor is connected between the VCC pin and GND pin to stabilize the VCC voltage and also decouple the noise on the VCC pin. The value of this ceramic capacitor should be above 1 µF. A ceramic capacitor with an X7R or X5R grade dielectric with a voltage rating higher than 10 V is recommended.

8.3.2 Input Undervoltage Lockout (UVLO)

An undervoltage lockout (UVLO) circuit stops the operation of the converter when the input voltage drops below the UVLO threshold of 2.04 V (typical). A hysteresis of 160 mV (typical) is added so that the device cannot be enabled again until the input voltage exceeds 2.2 V (typical). This function is implemented to prevent the device from malfunctioning when the input voltage is between 2.04 V and 2.2 V.

8.3.3 Enable and Soft Start

When the input voltage is above the UVLO threshold and the EN pin is pulled above 1.2 V, the TPS61378-Q1 is enabled. The device starts to monitor the FB pin. With a typical 400-µs delay time after EN is pulled high, the TPS61378-Q1 starts switching. There is an internal built-in start-up time, typically 2.5 ms, to limit the inrush current during start-up.

Copyright © 2021 Texas Instruments Incorporated

8.3.4 Shut Down

When the input voltage is below the UVLO threshold or the EN pin is pulled low, the TPS61378-Q1 is in shutdown mode and all the functions are disabled. The input voltage is isolated from the output to minimize the leakage currents.

8.3.5 Switching Frequency Setting

The TPS61378-Q1 uses a fixed-frequency control scheme. The switching frequency can be programmed between 200 kHz and 2.2 MHz using a resistor from the FREQ pin to GND. The resistor must be connected when the oscillator is synchronized by an external clock. The resistance is defined by 方程式 1.

$$F_{SW}(MHz) = \frac{41.9}{R_{FREQ}(k\Omega) + 1.05} \quad (1)$$

where

- R_{FREQ} is the resistance between the FREQ pin and the GND pin

For example, the switching frequency is 2.2 MHz if the resistance between the FREQ pin and GND is 18 kΩ. This pin cannot be left floating or tied to VCC.

8.3.6 Spread Spectrum Frequency Modulation

The TPS61378-Q1 uses a triangle waveform to spread the switching frequency with ±10% of normal frequency. The frequency of the triangle waveform is typically 0.4% of the switching frequency. For example, if the normal switching frequency of the TPS61378-Q1 is programmed to 2.2 MHz, the spread spectrum function modulates the switching frequency in the range of 1.98 MHz to 2.42 MHz in a triangle behavior with an 8.8-kHz rate.

The spread spectrum is only available while the clock of the TPS61378-Q1 is free running at its natural frequency. Any of the following conditions overrides spread spectrum, turning it off:

- An external clock is applied to the MODE/SYNC pin.
- The device works in PFM operation at light load.

8.3.7 Adjustable Peak Current Limit

The TPS61378-Q1 adopts a cycle-by-cycle peak current limit internally. The low-side switch is turned off immediately as soon as the switch peak current triggers the limit threshold. The peak switch current limit can be set by a resistor from the ILIM pin to ground. The relationship between the current limit and the resistor is shown in 方程式 2.

$$R_{LIM}(k\Omega) = 1.184 + \frac{90.56}{I_{LIM}(A)} \quad (2)$$

where

- R_{ILIM} is the resistance between the ILIM pin and the GND pin
- I_{LIM} is switch peak current limit

For instance, the current limit is set to 4.8 A if the R_{LIM} is 20 kΩ. This pin cannot be left floating or connected to VCC.

8.3.8 Bootstrap

The TPS61378-Q1 has an integrated bootstrap regulator circuit. A small ceramic capacitor is needed between the BST pin and SW pin to provide the gate drive supply voltage for high-side switches. The bootstrap capacitor is charged during the time when the low-side switch is in the ON state. The value of this ceramic capacitor should be above 0.1 µF. A ceramic capacitor with an X7R or X5R grade dielectric with a voltage rating higher than 6.3 V is recommended.

Copyright © 2021 Texas Instruments Incorporated

8.3.9 Load Disconnect

The TPS61378-Q1 integrates a load disconnect function when the input source is DC, completely cutting off the path between the input side and output side during shutdown.

The output disconnect function also allows the output short protection and minimizes the inrush current at start-up.

8.3.10 MODE/SYNC Configuration

表 8-1 summarizes the MODE/SYNC function and the entry condition.

表 8-1. MODE/SYNC Configuration

MODE/SYNC PIN CONFIGURATION	MODE
Logic Low or Floating	Auto PFM Mode
Logic High	Forced PWM Mode
External Synchronization	Forced PWM Mode

The TPS61378-Q1 can be synchronized to an external clock applied to the MODE/SYNC pin.

8.3.11 Overvoltage Protection (OVP)

If the output voltage exceeds the OVP threshold (typically 20 V), the TPS61378-Q1 immediately stops switching until the output voltage drops below the recovery threshold (typically 19.5 V). This function protects the device against excessive voltage.

8.3.12 Output Short Protection/Hiccup

In addition to the cycle-by-cycle current limit function, the TPS61378-Q1 also has output short protection. If the output current causes the low-side FET to reach current limit and pull the output voltage below the input voltage, the device enters into short circuit protection mode, triggering the hiccup timer. When the hiccup timer is triggered, the device limits the current to a relative lower level for 1.8 ms and then shuts down. After 67 ms, it will restart. If the short condition disappears, the device will automatically restart.

When FB voltage is below $\leqslant$ 0.1 V during fault condition, the current limit threshold is reduced to 1/5 of the programmed current limit. Frequency is clamped to 1.1 MHz if the FREQ pin setting is greater than 1.1 MHz.

8.3.13 Power-Good Indicator

The TPS61378-Q1 integrates a power-good function. The power-good output consists of an open-drain NMOS, requiring an external pullup resistor connect to a suitable voltage supply like VCC. The PG pin goes high with a typical 3.4-ms delay time after VOUT reaches 90% of the target output voltage. When the output voltage drops below 85% of the target output voltage, the PG pin immediately goes low without delay.

8.3.14 Thermal Shutdown

A thermal shutdown is implemented to prevent damage due to excessive heat and power dissipation. Typically, the thermal shutdown occurs at junction temperatures exceeding 165°C. When the thermal shutdown is triggered, the device stops switching and recovers when the junction temperature falls below 145°C (typical).

8.4 Device Functional Modes

8.4.1 Forced PWM Mode

The TPS61378-Q1 enters forced PWM mode by pulling the MODE/SYNC pin to logic high for more than five switching cycles. In forced PWM mode, the TPS61378-Q1 keeps the switching frequency constant at light load condition. When the load current decreases, the output of the internal error amplifier also decreases to keep the inductor peak current down. When the output current decreases further, the high-side switch is not turned off even if the current of the high-side switch goes negative to keep the frequency constant.

Copyright © 2021 Texas Instruments Incorporated

8.4.2 Auto PFM Mode

The TPS61378-Q1 enters auto PFM Mode by pulling the MODE/SYNC pin to logic low for more than five switching cycles or leaving the pin floating. The TPS61378-Q1 improves the efficiency at light load when operating in PFM mode. When the output current decreases to a certain level, the output voltage of the error amplifier is clamped by the internal circuit. If the output current reduces further, the inductor current through the high-side switch will be clamped but not lowered further. Pulses are skipped to improve the efficiency at light load.

8.4.3 External Clock Synchronization

The TPS61378-Q1 supports external clock synchronization with a range of 200 kHz to 2.2 MHz. The TPS61378-Q1 remains in forced PWM mode and operates in CCM across the entire load range if the oscillator is synchronized by an external clock. The spread spectrum feature is disabled when external synchronization is used.

8.4.4 Down Mode

The TPS61378-Q1 features down mode operation when input voltage is close to or higher than output voltage. In down mode, output voltage is regulated at target value, even when V_{IN} > V_O. The TPS61378-Q1 high-side and low-side FETs are switching devices that always work in boost operation, where the isolation FET always works as a linear device.

For boost circuits, on-time or duty cycle is reduced as input voltage approaches output voltage. The TPS61378-Q1 enters down mode when V_{IN} reaches 85% (typical) of V_O voltage at 2.2 MHz. Exiting down mode requires V_{IN} to be reduced below 85% (typical) of V_O voltage at 2.2 MHz.

In normal operation, the isolation FET is fully on.

When down mode is triggered and V_{IN} is less than VO pin voltage, the OUT pin has a fixed 2 V (typical) above VO pin voltage. An isolation FET works in LDO mode to regulate VO pin voltage with a 2-V constant voltage drop.

When down mode is triggered and V_{IN} is 100 mV (typical) higher than VO pin voltage, the OUT pin has an approximated 3 V (typical) above the V_{IN} pin voltage. As V_{IN} keeps rising, the OUT pin continues rising with 3 V on top of V_{IN}. In addition, an isolation FET works in LDO mode to regulate VO pin voltage with a voltage differential of the OUT pin and VO pin.

Refer to 图 8-1.

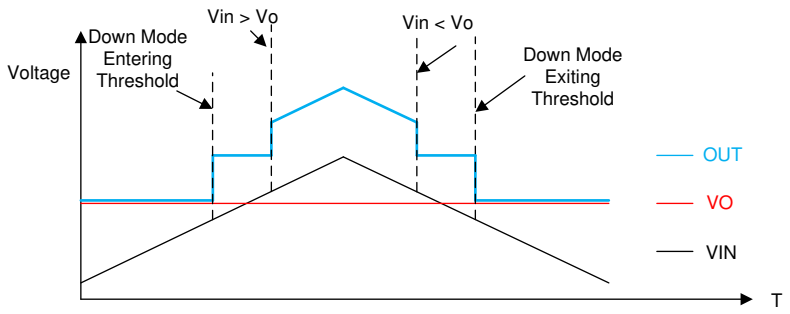

图 8-1. Down Mode

Take care during short-to-ground condition when operation V_{IN} is above 6 V. During hiccup on, the device operates in down mode and the isolation FET voltage drop is V_{IN} + 3 V (OUT pin to VO pin).

Copyright © 2021 Texas Instruments Incorporated

9 Application and Implementation

Note

以下应用部分中的信息不属于 TI 器件规格的范围，TI 不担保其准确性和完整性。TI 的客 户应负责确定器件是否适用于其应用。客户应验证并测试其设计，以确保系统功能。

9.1 Application Information

The TPS61378-Q1 is a 25-µA quiescent current boost converter that supports a 2.3-V to 14-V input voltage range. The device also supports load disconnect to minimize the leakage current. The following design procedure can be used to select component values for the TPS61378-Q1.

9.2 Typical Application

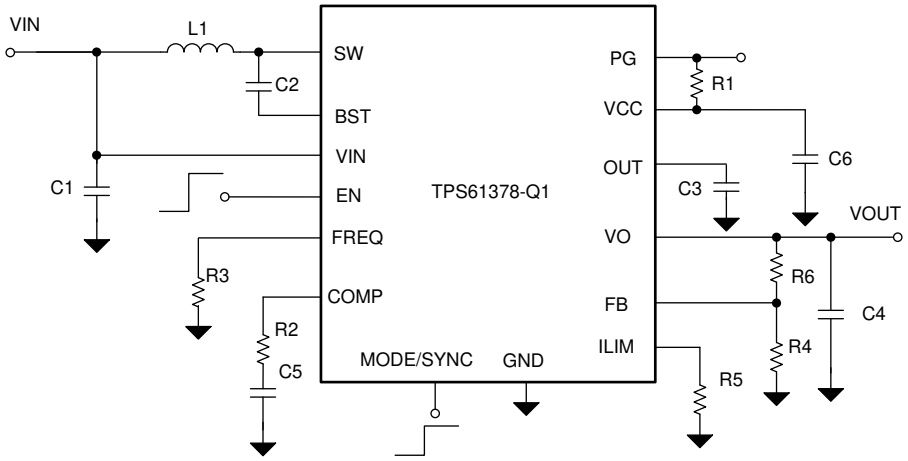

图 9-1. Typical Application

9.2.1 Design Requirements

A typical application example is dual cameras powered through a coax cable, which normally requires 9.0-V output as its bias voltage and consumes less than 600 mA current. 800-mA load current is designed to provide margin. The following design procedure can be used to select external component values for the TPS61378-Q1.

表 9-1. Design Requirements

PARAMETERS	VALUES
Input Voltage	3.3 V to 6.4 V
Output Voltage	9.0 V
Switching Frequency	2.2 MHz
Output Current	800 mA
Output Voltage Ripple	± 25 mV

9.2.2 Detailed Design Procedure

9.2.2.1 Programming the Output Voltage

There are two ways to set the output voltage of the TPS61378-Q1: adjustable or fixed. If the resistance between FB and GND is higher than 14.4 kΩ and less than 100kΩ during start-up, the TPS61378-Q1 works as an adjustable output version. The FB pin is connected to the negative input of the internal error amplifier directly. The output voltage can be programmed by adjusting the external resistor divider R_{Upper} and R_{Lower} according to 方程式 3. When the output voltage is in well regulation, the typical voltage at the FB pin is V_{REF} of 0.8 V.

Copyright © 2021 Texas Instruments Incorporated

$$V_{OUT} = V_{REF} \times \frac{(R_{Upper} + R_{Lower})}{R_{Lower}} \quad (3)$$

For some applications where the resistor needs to be as low as possible, the low-side divider can be 20 kΩ. The reference voltage is 0.8 V and the high-side divider is 205 kΩ for 9-V output voltage.

For other applications without specific requirements on divider resistance, you can choose R_{Lower} to be approximately 80.6 kΩ. Slightly increasing or decreasing R_{Lower} can result in closer output voltage matching when using standard values resistors.

For the best accuracy, R_{Lower} is recommended to be smaller than 100 kΩ to ensure that the current flowing through R_{Lower} is at least 100 times larger than FB pin leakage current. Changing R_{Lower} towards the lower value increases the robustness against noise injection. Changing R_{Lower} to higher values reduces the quiescent current to achieve higher efficiency at light load.

If the resistance between FB and GND is less than 9.6kΩ during start-up, the TPS61378-Q1 works as a fixed output voltage version. The TPS61378-Q1 uses the internal resistor divider.

For 5-V fixed output voltage, R_{Lower} is between 0Ω and 2.4kΩ and R_{Upper} should be removed.

For 5.25-V fixed output voltage, R_{Lower} is between 3.6kΩ and 4.8 kΩ and R_{Upper} should be removed.

For 5.5-V fixed output voltage, R_{Lower} is between 7.2kΩ and 9.6kΩ and R_{Upper} should be removed.

9.2.2.2 Setting the Switching Frequency

The switching frequency of the TPS61378-Q1 is set at 2.2 MHz. Use 方程式 1 to calculate the required resistor value. The calculated value is 18 kΩ to get the frequency of 2.2 MHz.

9.2.2.3 Setting the Current Limit

The current limit of the TPS61378-Q1 can be programmed by an external resistor. For a target current limit of 4.8 A, use 方程式 2. The calculated resistor value is 20 kΩ.

9.2.2.4 Selecting the Inductor

A boost converter normally requires two main passive components for storing energy during power conversion: an inductor and an output capacitor. The inductor affects the steady state efficiency (including the ripple and efficiency), transient behavior, and loop stability, which makes the inductor the most critical component in application.

When selecting the inductor and the inductance, the other important parameters are:

- The maximum current rating (RMS and peak current should be considered)
- The series resistance
- Operating temperature

The TPS61378-Q1 has built-in slope compensation to avoid subharmonic oscillation associated with current mode control. If the inductor value is too low and makes the inductor peak-to-peak ripple higher than 2 A, the slope compensation may not be adequate, and the loop can be unstable. Therefore, it is recommended to make the peak-to-peak current ripple between 800 mA to 2 A when selecting the inductor.

The inductance can be calculated by 方程式 4, 方程式 5, and 方程式 6:

$$\Delta I_L = \frac{V_{IN} \times D}{L \times f_{SW}} \quad (4)$$

$$\Delta I_{L_R} = Ripple\% \times \frac{V_{OUT} \times I_{OUT}}{\eta \times V_{IN}} \quad (5)$$

Copyright © 2021 Texas Instruments Incorporated

$$L = \frac{1}{\text{Ripple \%}} \times \frac{\eta \times V_{IN}}{V_{OUT} \times I_{OUT}} \times \frac{V_{IN} \times D}{f_{SW}} \quad (6)$$

where

- Δ_{IL} is the peak-peak inductor current ripple
- V_{IN} is the input voltage
- D is the duty cycle
- L is the inductor
- f_{SW} is the switching frequency
- Ripple % is the ripple ration versus the DC current
- V_{OUT} is the output voltage
- I_{OUT} is the output current
- η is the efficiency

The current flowing through the inductor is the inductor ripple current plus the average input current. During power up, load faults, or transient load conditions, the inductor current can increase above the peak inductor current calculated.

Inductor values can have ±20%, or even ±30%, tolerance with no current bias. When the inductor current approaches the saturation level, the inductance can decrease 20% to 35% from the value at 0-A bias current, depending on how the inductor vendor defines saturation. When selecting an inductor, make sure the rated current, especially the saturation current, is larger than its peak current during the operation.

The inductor peak current varies as a function of the load, switching frequency, and input and output voltages. The peak current can be calculated with 方程式 7 and 方程式 8.

$$I_{PEAK} = I_{IN} + \frac{1}{2} \times \Delta I_L \quad (7)$$

where

- I_{PEAK} is the peak current of the inductor
- I_{IN} is the input average current
- Δ_{IL} is the ripple current of the inductor

The input DC current is determined by the output voltage. The output current can be calculated by:

$$I_{IN} = \frac{V_{OUT} \times I_{OUT}}{V_{IN} \times \eta} \quad (8)$$

where

- I_{IN} is the input current of the inductor
- V_{OUT} is the output voltage
- V_{IN} is the input voltage
- η is the efficiency

While the inductor ripple current depends on the inductance, the frequency, the input voltage, and duty cycle are calculated by 方程式 4. Replace 方程式 4 and 方程式 8 into 方程式 7 and get the inductor peak current:

$$I_{PEAK} = \frac{I_{OUT}}{(1-D) \times \eta} + \frac{1}{2} \times \frac{V_{IN} \times D}{L \times f_{SW}} \quad (9)$$

where

- I_{PEAK} is the peak current of the inductor

Copyright © 2021 Texas Instruments Incorporated

- I_{OUT} is the output current
- D is the duty cycle
- η is the efficiency
- V_{IN} is the input voltage
- L is the inductor
- f_{SW} is the switching frequency

The heat rating current (RMS) is can be calculated with 方程式 10:

$$I_{L_RMS} = \sqrt{I_{IN}^2 + \frac{1}{12}(\Delta I_L)^2} \quad (10)$$

where

- I_{L_RMS} is the RMS current of the inductor
- I_{IN} is the input current of the inductor
- ΔI_L is the ripple current of the inductor

It is important that the peak current does not exceed the inductor saturation current and the RMS current is not over the temperature-related rating current of the inductors.

For a given physical inductor size, increasing inductance usually results in an inductor with lower saturation current. The total losses of the coil consists of the DC resistance (DCR) loss and the following frequency-dependent loss:

- The losses in the core material (magnetic hysteresis loss, especially at high switching frequencies)
- Additional losses in the conductor from the skin effect (current displacement at high frequencies)
- Magnetic field losses of the neighboring windings (proximity effect)

For a certain inductor, the larger current ripple (smaller inductor) generates the higher DC and also the frequency-dependent loss. An inductor with lower DCR is basically recommended for higher efficiency. However, it is usually a tradeoff between the loss and foot print. 表 9-2 lists some recommended inductors.

表 9-2. Recommended Inductors

PART NUMBER	L (μH)	DCR TYP (mΩ) MAX	SATURATION CURRENT (A)	SIZE (L × W × H mm)	VENDOR(1)
XEL4030-471MEB	0.47	4.1	15.5	4 x 4 x 3	Coilcraft
XEL4030-102MEB	1	8.9	9	4 x 4 x 3	Coilcraft
DFE2HCAHR47MJ0L	0.47	25	5.1	2.5 x 2 x 1.2	Murata
DFE322520FD-1R0M	1	22	7.5	3.2 x 2.5 x 2	Murata
TFM322512ALMAR47MTAA	0.47	16	7.6	3.2 x 2.5 x 1.2	TDK
TFM322512ALMA1R0MTAA	1	30	5.1	3.2 x 2.5 x 1.2	TDK

(1) See the *Third-party Products Disclaimer*.

9.2.2.5 Selecting the Output Capacitors

The output capacitor is mainly selected to meet the requirements at load transient or steady state. The loop is compensated for the output capacitor selected. The output ripple voltage is related to the equivalent series resistance (ESR) of the capacitor and its capacitance. Assuming a capacitor with zero ESR, the minimum capacitance needed for a given ripple can be calculated by 方程式 11:

$$C_{OUT} = \frac{I_{OUT} \times (V_{OUT} - V_{IN})}{f_{SW} \times \Delta V \times V_{OUT}} \quad (11)$$

where

- C_{OUT} is the output capacitor

Copyright © 2021 Texas Instruments Incorporated

- I_{OUT} is the output current
- V_{OUT} is the output voltage
- V_{IN} is the input voltage
- Δ_V is the output voltage ripple required
- f_{SW} is the switching frequency

The additional output ripple component caused by ESR is calculated by 方程式 12:

$$\Delta V_{ESR} = I_{OUT} \times R_{ESR} \quad (12)$$

where

- ΔV_{ESR} is the output voltage ripple caused by ESR
- R_{ESR} is the resistor in series with the output capacitor

For the ceramic capacitor, the ESR ripple can be neglected. However, for the tantalum or electrolytic capacitors, it must be considered if used.

The minimum ceramic output capacitance needed to meet a load transient requirement can be estimated using 方程式 13:

$$C_{OUT} = \frac{\Delta I_{STEP}}{2\pi \times f_{BW} \times \Delta V_{TRAN}} \quad (13)$$

where

- ΔI_{STEP} is the transient load current step
- ΔV_{TRAN} is the allowed voltage dip for the load current step
- f_{BW} is the control loop bandwidth (that is, the frequency where the control loop gain crosses zero)

For the output capacitor on the OUT pin, the effective capacitance is recommended between 0.22 μF to 1 μF.

Take care when evaluating the derating of a ceramic capacitor under the DC bias. Ceramic capacitors can derate by as much as 70% of the capacitance at the respective rated voltage. Therefore, enough margins on the voltage rating must be considered to ensure adequate capacitance at the required output voltage.

9.2.2.6 Selecting the Input Capacitors

Multilayer ceramic capacitors are an excellent choice for the input decoupling of the step-up converter since they have extremely low ESR and are available in small footprints. Input capacitors must be located as close as possible to the device. While a 22-μF input capacitor or equivalent is sufficient for the most applications, larger values can be used to reduce input current ripple.

Take care when using only ceramic input capacitors. When a ceramic capacitor is used at the input and the power is being supplied through long wires, such as from a wall adapter, a load step at the output can induce ringing at the VIN pin. This ringing can couple to the output and be mistaken as loop instability or can even damage the device. Additional "bulk" capacitance (electrolytic or tantalum) in this circumstance, must be placed between C_{IN} and the power source lead to reduce ringing that can occur between the inductance of the power source leads and C_{IN}.

9.2.2.7 Loop Stability and Compensation

9.2.2.7.1 Small Signal Model

The TPS61378-Q1 uses the fixed frequency peak current mode control. There is an internal adaptive slope compensation to avoid subharmonic oscillation. With the inductor current information sensed, the small-signal model of the power stage reduces from a two-pole system, created by L and C_{OUT}, to a single-pole system, created by R_{OUT} and C_{OUT}. The single-pole system is easily used with the loop compensation. 图 9-2 shows the equivalent small signal elements of a boost converter.

Copyright © 2021 Texas Instruments Incorporated

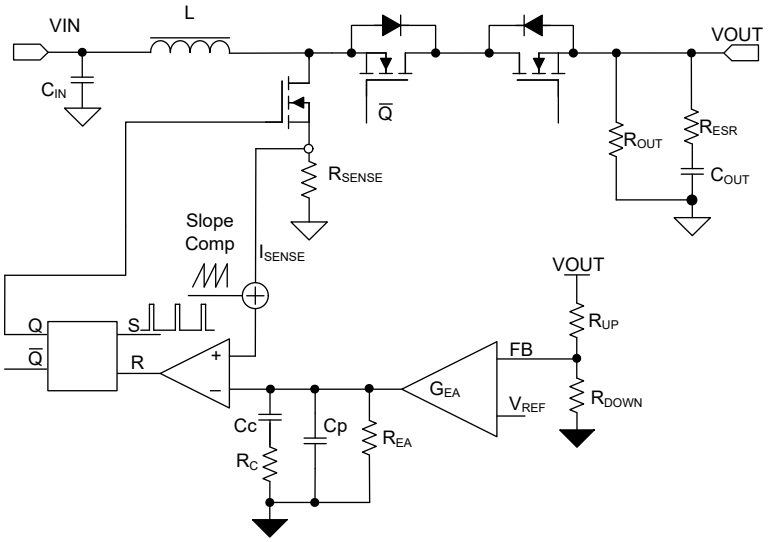

图 9-2. TPS61378-Q1 Control Equivalent Circuitry Model

The small signal of power stage is:

$$K_{PS}(S) = \frac{R_{OUT} \times (1-D)}{2 \times R_{SENSE}} \times \frac{(1+\frac{S}{2\pi \times f_{ESR}})(1-\frac{S}{2\pi \times f_{RHP}})}{(1+\frac{S}{2\pi \times f_P})} \quad (14)$$

where

- D is the duty cycle
- R_{OUT} is the output load resistor
- R_{SENSE} is the equivalent internal current sense resistor, which is typically 118 mΩ

The single pole of the power stage is:

$$f_P = \frac{2}{2\pi \times R_{OUT} \times C_{OUT}} \quad (15)$$

where

- C_{OUT} is the output capacitance. For a boost converter having multiple identical output capacitors in parallel, simply combine the capacitors with the equivalent capacitance

The zero created by the ESR of the output capacitor is:

$$f_{ESR} = \frac{1}{2\pi \times R_{ESR} \times C_{OUT}} \quad (16)$$

where

- R_{ESR} is the equivalent resistance in series of the output capacitor

The right-hand plane zero is:

$$f_{RHP} = \frac{R_{OUT} \times (1-D)^2}{2\pi \times L} \quad (17)$$

where

Copyright © 2021 Texas Instruments Incorporated

- D is the duty cycle
- R_{OUT} is the output load resistor
- L is the inductance

方程式 18 shows the equation for feedback resistor network and the error amplifier.

$$H_{EA}(S) = G_{EA} \times R_{EA} \times \frac{R_{DOWN}}{R_{UP} + R_{DOWN}} \times \frac{1 + \frac{S}{2 \times \pi \times f_Z}}{(1 + \frac{S}{2 \times \pi \times f_{P1}}) \times (1 + \frac{S}{2 \times \pi \times f_{P2}})} \quad (18)$$

where

- R_{EA} is the output impedance of the error amplifier, typically R_{EA} = 500 MΩ
- f_{P1}, f_{P2} is the pole's frequency of the compensation
- f_Z is the zero’ s frequency of the compensation network

$$f_{P1} = \frac{1}{2\pi \times R_{EA} \times C_c} \quad (19)$$

where

- C_C is the zero capacitor compensation

$$f_{P2} = \frac{1}{2\pi \times R_C \times C_P} \quad (20)$$

where

- C_P is the pole capacitor compensation
- R_C is the resistor of the compensation network

$$f_Z = \frac{1}{2\pi \times R_C \times C_C} \quad (21)$$

9.2.2.7.2 Loop Compensation Design Steps

With the small signal models coming out, the next step is to calculate the compensation network parameters with the given inductor and output capacitance.

1. **Set the Crossover Frequency, f_C.**

   The first step is to set the loop crossover frequency, f_C. The higher the crossover frequency, the faster the loop response is. It is generally accepted that the loop gain crosses over no higher than the lower of either 1/10 of the switching frequency, f_{SW}, or 1/5 of the RHPZ frequency, f_{RHPZ}. Then, calculate the loop compensation network values of R_C, C_C, and C_P by the following equations.
2. **Set the Compensation Resistor, R_C.**

   By placing f_Z below f_C, for frequencies above f_C, R_C | | R_{EA} ~ = R_C, so R_C × G_{EA} sets the compensation gain. Setting the compensation gain, $K_{COMP\text{-}dB}$, at f_Z results in the total loop gain, $T_{(s)}$ = $K_{PS(s)}$ × $H_{EA(s)}$, being zero at f_C.

   Therefore, to approximate a single-pole rolloff up to f_{P2}, rearrange 方程式 18 to solve for RC so that the compensation gain, K_{EA}, at f_C is the negative of the gain, K_{PS}. Read at frequency f_C for the power stage bode plot or more simply:

Copyright © 2021 Texas Instruments Incorporated

$$K_{EA}(f_C) = 20 \times \log(G_{EA} \times R_C \times \frac{R_{DOWN}}{R_{UP} + R_{DOWN}}) = -K_{PS}(f_C) \quad (22)$$

where

- K_{EA} is gain of the error amplifier network
- K_{PS} is the gain of the power stage
- G_{EA} is the transconductance of the amplifier, the typical value of G_{EA} = 70 µA / V

3. **Set the Compensation Zero capacitor, C_C.**

Place the compensation zero at the power stage R_{OUT} ,C_{OUT} pole’ s position to get:

$$f_Z = \frac{1}{2\pi \times R_C \times C_C} \quad (23)$$

Set $f_Z = f_P$, and get:

$$C_C = \frac{R_{OUT} \times C_{OUT}}{2R_C} \quad (24)$$

4. **Set the Compensation Pole Capacitor, C_P.**

Place the compensation pole at the zero produced by R_{ESR} and C_{OUT}. It is useful for canceling unhelpful effects of the ESR zero.

$$f_{P2} = \frac{1}{2\pi \times R_C \times C_P} \quad (25)$$

$$f_{ESR} = \frac{1}{2\pi \times R_{ESR} \times C_{OUT}} \quad (26)$$

Set $f_{P2} = f_{ESR}$, and get:

$$C_P = \frac{R_{ESR} \times C_{OUT}}{R_C} \quad (27)$$

9.2.2.7.3 Selecting the Bootstrap Capacitor

The bootstrap capacitor between the BST and SW pin supplies the gate current to charge the high-side FET device gate during the turnon of each cycle. The gate current also supplies charge for the bootstrap capacitor. The recommended value of the bootstrap capacitor is 0.1 µF to 1 µF. C_{BST} must be a good quality, low-ESR ceramic capacitor located at the pins of the device to minimize potentially damaging voltage transients caused by trace inductance. A value of 0.1 µF was selected for this design example.

9.2.2.7.4 V_{CC} Capacitor

The primary purpose of the V_{CC} capacitor is to supply the peak transient currents of the driver and bootstrap capacitor and provide stability for the V_{CC} regulator. The value of C_{VCC} must be at least 10 times greater than the value of C_{BST}, and must be a good quality, low-ESR ceramic capacitor. C_{VCC} must be placed close to the pins of the IC to minimize potentially damaging voltage transients caused by the trace inductance. A value of 2.2 µF was selected for this design example.

Copyright © 2021 Texas Instruments Incorporated

9.2.3 Application Curves

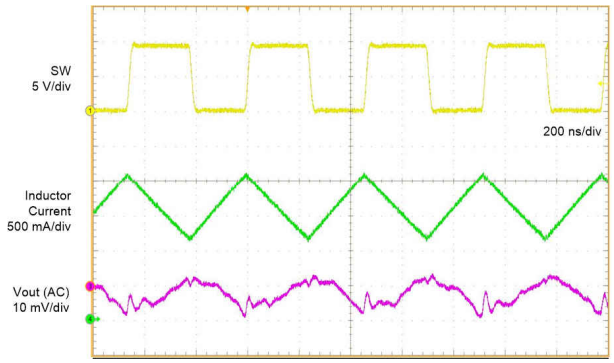

图 9-3. Switching Waveform V_{IN} = 5 V, V_{OUT} = 9 V, I_{OUT} = 800 mA, FPWM

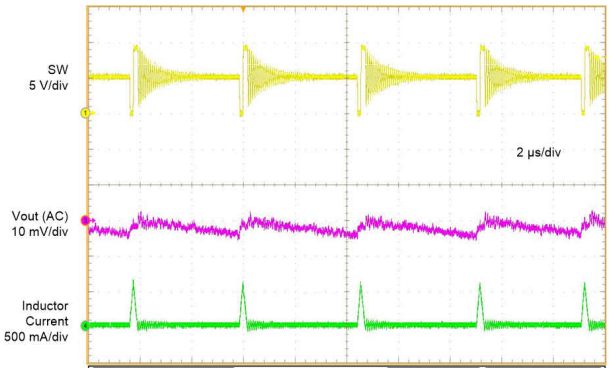

图 9-4. Switching Waveform V_{IN} = 5 V, V_{OUT} = 9 V, I_{OUT} = 0 mA, Auto PFM

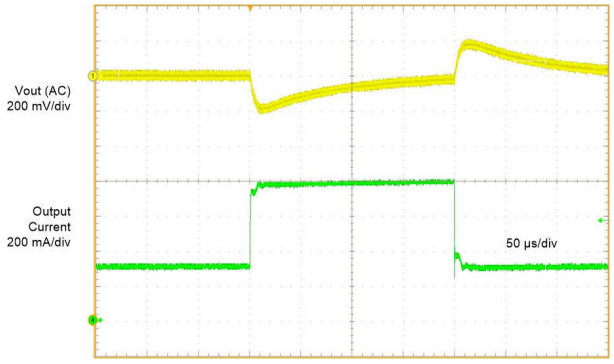

图 9-5. Load Transient V_{IN} = 5 V, V_{OUT} = 9 V, I_{OUT} = 300 mA to 800 mA, FPWM

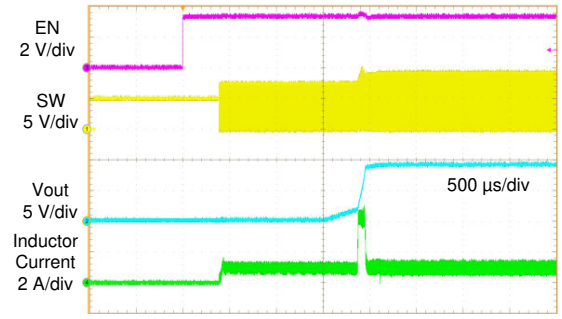

图 9-6. Start-up from EN Waveform V_{IN} = 5 V, V_{OUT} = 9 V, I_{OUT} = 500 mA, FPWM

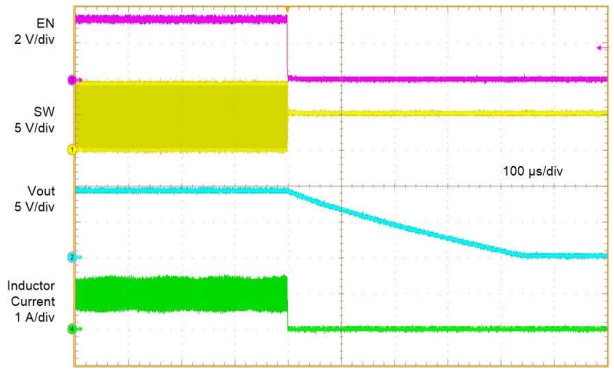

图 9-7. Shutdown from EN Waveforms V_{IN} = 5 V, V_{OUT} = 9 V, I_{OUT} = 500 mA, FPWM

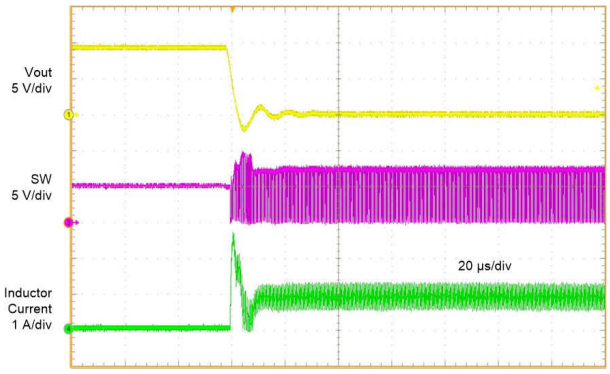

图 9-8. Short Circuit Protection V_{IN} = 5 V, V_{OUT} = 9 V, FPWM

Copyright © 2021 Texas Instruments Incorporated

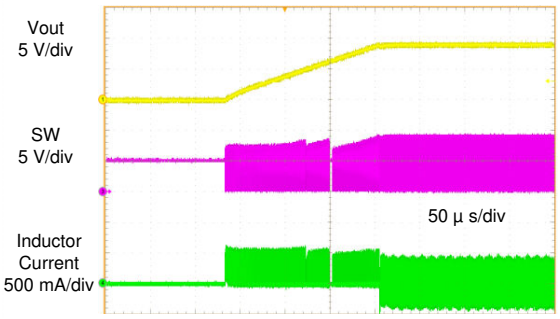

图 9-9. Short Circuit Recovery V_{IN} = 5 V, V_{OUT} = 9 V, I_{OUT} = 0 mA, FPWM

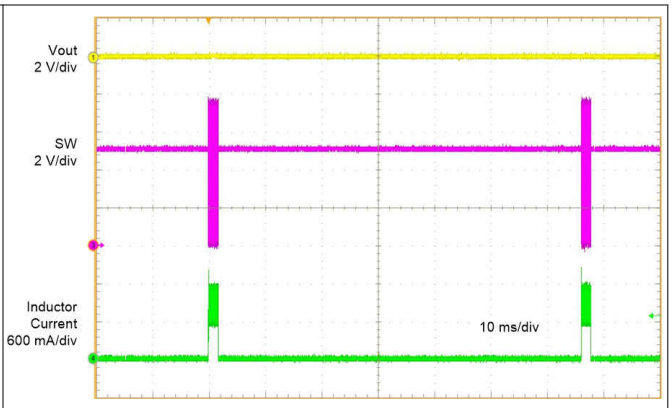

图 9-10. Hiccup Short Circuit Protection V_{IN} = 5 V, V_{OUT} = 9 V, FPWM

10 Power Supply Recommendations

The TPS61378-Q1 is designed to operate from an input voltage supply range between 2.3 V to 14 V. This input supply must be well regulated. If the input supply is located more than a few inches from the device, the bulk capacitance can be required in addition to the ceramic bypass capacitors. An electrolytic capacitor with a value of 47 µF is a typical choice.

Copyright © 2021 Texas Instruments Incorporated

11 Layout

11.1 Layout Guidelines

As for all switching power supplies, the layout is an important step in the design, especially at high peak currents and high switching frequencies. If the layout is not carefully done, the regulator can show stability problems as well as EMI problems. Therefore, use wide and short traces for the main current path and for the power ground paths. The input and output capacitor, as well as the inductor must be placed as close as possible to the IC.

11.2 Layout Example

The bottom layer is a large GND plane connected by vias.

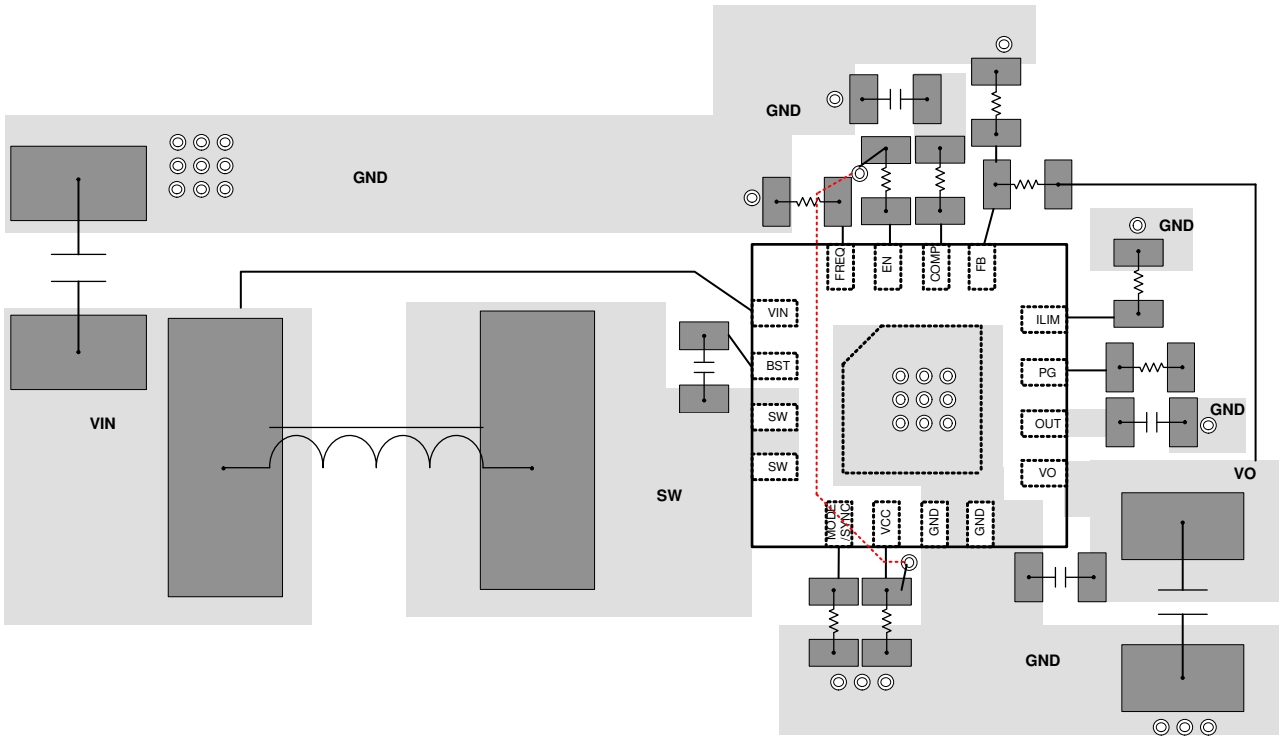

图 11-1. Recommended Layout

Copyright © 2021 Texas Instruments Incorporated

12 Device and Documentation Support

12.1 Device Support

12.1.1 第三方产品免责声明

TI 发布的与第三方产品或服务有关的信息，不能构成与此类产品或服务或保修的适用性有关的认可，不能构成此类产品或服务单独或与任何 TI 产品或服务一起的表示或认可。

12.2 接收文档更新通知

要接收文档更新通知，请导航至 ti.com 上的器件产品文件夹。点击 *订阅更新* 进行注册，即可每周接收产品信息更改摘要。有关更改的详细信息，请查看任何已修订文档中包含的修订历史记录。

12.3 支持资源

TI E2E™ 支持论坛是工程师的重要参考资料，可直接从专家获得快速、经过验证的解答和设计帮助。搜索现有解答或提出自己的问题可获得所需的快速设计帮助。

链接的内容由各个贡献者“按原样”提供。这些内容并不构成 TI 技术规范，并且不一定反映 TI 的观点；请参阅 TI 的《使用条款》。

12.4 Trademarks

TI E2E™ is a trademark of Texas Instruments.
所有商标均为其各自所有者的财产。

12.5 术语表

TI 术语表　　本术语表列出并解释了术语、首字母缩略词和定义。

12.6 Electrostatic Discharge Caution



This integrated circuit can be damaged by ESD. Texas Instruments recommends that all integrated circuits be handled with appropriate precautions. Failure to observe proper handling and installation procedures can cause damage.

ESD damage can range from subtle performance degradation to complete device failure. Precision integrated circuits may be more susceptible to damage because very small parametric changes could cause the device not to meet its published specifications.

13 Mechanical, Packaging, and Orderable Information

The following pages include mechanical, packaging, and orderable information. This information is the most current data available for the designated devices. This data is subject to change without notice and revision of this document. For browser-based versions of this data sheet, refer to the left-hand navigation.

Copyright © 2021 Texas Instruments Incorporated

重要声明和免责声明

TI 提供技术和可靠性数据（包括数据表）、设计资源（包括参考设计）、应用或其他设计建议、网络工具、安全信息和其他资源，不保证没有瑕疵且不做出任何明示或暗示的担保，包括但不限于对适销性、某特定用途方面的适用性或不侵犯任何第三方知识产权的暗示担保。

这些资源可供使用 TI 产品进行设计的熟练开发人员使用。您将自行承担以下全部责任：(1) 针对您的应用选择合适的 TI 产品，(2) 设计、验证并测试您的应用，(3) 确保您的应用满足相应标准以及任何其他安全、安保或其他要求。这些资源如有变更，恕不另行通知。TI 授权您仅可将这些资源用于研发本资源所述的 TI 产品的应用。严禁对这些资源进行其他复制或展示。您无权使用任何其他 TI 知识产权或任何第三方知识产权。您应全额赔偿因在这些资源的使用中对 TI 及其代表造成的任何索赔、损害、成本、损失和债务，TI 对此概不负责。

TI 提供的产品受 TI 的销售条款 (https:www.ti.com/legal/termsofsale.html) 或 ti.com 上其他适用条款/TI 产品随附的其他适用条款的约束。TI 提供这些资源并不会扩展或以其他方式更改 TI 针对 TI 产品发布的适用的担保或担保免责声明。

邮寄地址：Texas Instruments, Post Office Box 655303, Dallas, Texas 75265
Copyright © 2021，德州仪器 (TI) 公司

PACKAGING INFORMATION

Orderable Device	Status (1)	Package Type	Package Drawing	Pins	Package Qty	Eco Plan (2)	Lead finish/ Ball material (6)	MSL Peak Temp (3)	Op Temp (°C)	Device Marking (4/5)	Samples
TPS613783QWRTERQ1	ACTIVE	WQFN	RTE	16	3000	RoHS & Green	NIPDAU	Level-2-260C-1 YEAR	-40 to 125	2G8H	Samples
TPS613785QWRTERQ1	ACTIVE	WQFN	RTE	16	3000	RoHS & Green	NIPDAU	Level-2-260C-1 YEAR	-40 to 125	2G9H	Samples
TPS61378QWRTERQ1	ACTIVE	WQFN	RTE	16	3000	RoHS & Green	NIPDAU	Level-2-260C-1 YEAR	-40 to 125	2ELH	Samples

(1) The marketing status values are defined as follows:
ACTIVE: Product device recommended for new designs.
LIFEBUY: TI has announced that the device will be discontinued, and a lifetime-buy period is in effect.
NRND: Not recommended for new designs. Device is in production to support existing customers, but TI does not recommend using this part in a new design.
PREVIEW: Device has been announced but is not in production. Samples may or may not be available.
OBSOLETE: TI has discontinued the production of the device.

(2) **RoHS:** TI defines "RoHS" to mean semiconductor products that are compliant with the current EU RoHS requirements for all 10 RoHS substances, including the requirement that RoHS substance do not exceed 0.1% by weight in homogeneous materials. Where designed to be soldered at high temperatures, "RoHS" products are suitable for use in specified lead-free processes. TI may reference these types of products as "Pb-Free".
RoHS Exempt: TI defines "RoHS Exempt" to mean products that contain lead but are compliant with EU RoHS pursuant to a specific EU RoHS exemption.
Green: TI defines "Green" to mean the content of Chlorine (Cl) and Bromine (Br) based flame retardants meet JS709B low halogen requirements of <=1000ppm threshold. Antimony trioxide based flame retardants must also meet the <=1000ppm threshold requirement.

(3) MSL, Peak Temp. - The Moisture Sensitivity Level rating according to the JEDEC industry standard classifications, and peak solder temperature.

(4) There may be additional marking, which relates to the logo, the lot trace code information, or the environmental category on the device.

(5) Multiple Device Markings will be inside parentheses. Only one Device Marking contained in parentheses and separated by a "~" will appear on a device. If a line is indented then it is a continuation of the previous line and the two combined represent the entire Device Marking for that device.

(6) Lead finish/Ball material - Orderable Devices may have multiple material finish options. Finish options are separated by a vertical ruled line. Lead finish/Ball material values may wrap to two lines if the finish value exceeds the maximum column width.

Important Information and Disclaimer: The information provided on this page represents TI's knowledge and belief as of the date that it is provided. TI bases its knowledge and belief on information provided by third parties, and makes no representation or warranty as to the accuracy of such information. Efforts are underway to better integrate information from third parties. TI has taken and continues to take reasonable steps to provide representative and accurate information but may not have conducted destructive testing or chemical analysis on incoming materials and chemicals. TI and TI suppliers consider certain information to be proprietary, and thus CAS numbers and other limited information may not be available for release.

In no event shall TI's liability arising out of such information exceed the total purchase price of the TI part(s) at issue in this document sold by TI to Customer on an annual basis.

TAPE AND REEL INFORMATION

REEL DIMENSIONS

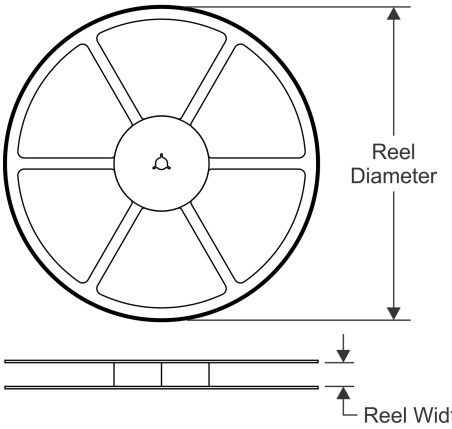

TAPE DIMENSIONS

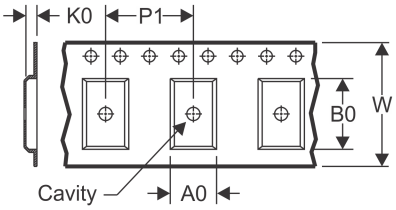

A0	Dimension designed to accommodate the component width
B0	Dimension designed to accommodate the component length
K0	Dimension designed to accommodate the component thickness
W	Overall width of the carrier tape
P1	Pitch between successive cavity centers

QUADRANT ASSIGNMENTS FOR PIN 1 ORIENTATION IN TAPE

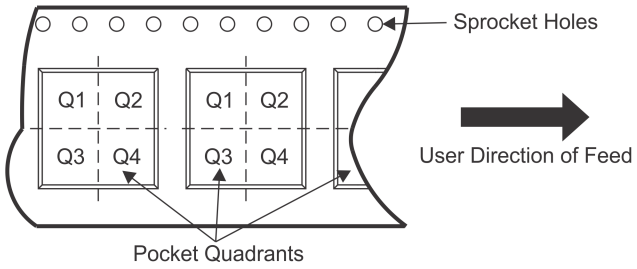

*All dimensions are nominal

Device	Package Type	Package Drawing	Pins	SPQ	Reel Diameter (mm)	Reel Width W1 (mm)	A0 (mm)	B0 (mm)	K0 (mm)	P1 (mm)	W (mm)	Pin1 Quadrant
TPS613783QWRTERQ1	WQFN	RTE	16	3000	330.0	12.4	3.3	3.3	1.1	8.0	12.0	Q2
TPS613785QWRTERQ1	WQFN	RTE	16	3000	330.0	12.4	3.3	3.3	1.1	8.0	12.0	Q2
TPS61378QWRTERQ1	WQFN	RTE	16	3000	330.0	12.4	3.3	3.3	1.1	8.0	12.0	Q2

TAPE AND REEL BOX DIMENSIONS

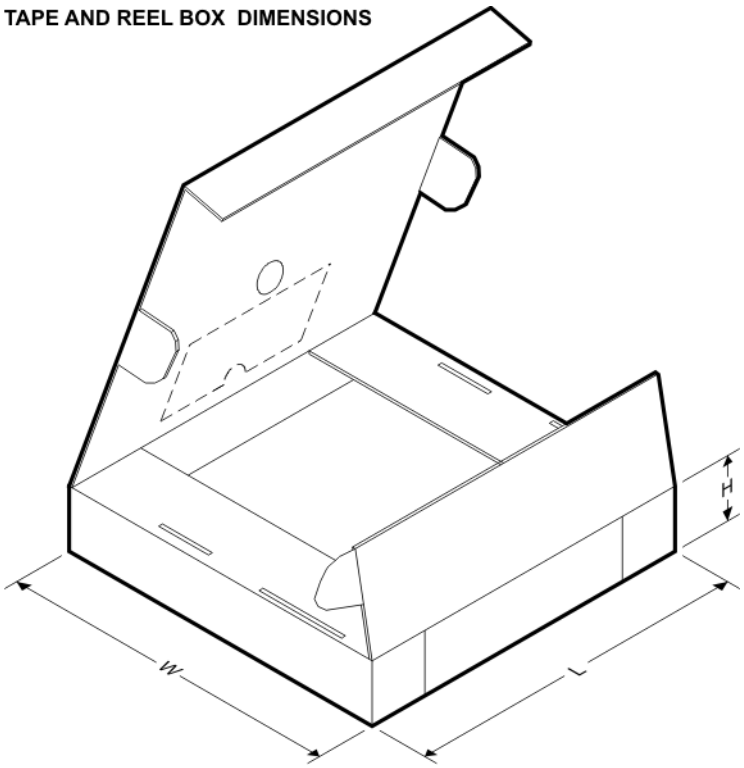

*All dimensions are nominal

Device	Package Type	Package Drawing	Pins	SPQ	Length (mm)	Width (mm)	Height (mm)
TPS613783QWRTERQ1	WQFN	RTE	16	3000	367.0	367.0	35.0
TPS613785QWRTERQ1	WQFN	RTE	16	3000	367.0	367.0	35.0
TPS61378QWRTERQ1	WQFN	RTE	16	3000	367.0	367.0	35.0

GENERIC PACKAGE VIEW

RTE 16

WQFN - 0.8 mm max height

3 x 3, 0.5 mm pitch

PLASTIC QUAD FLATPACK - NO LEAD

This image is a representation of the package family, actual package may vary.
Refer to the product data sheet for package details.

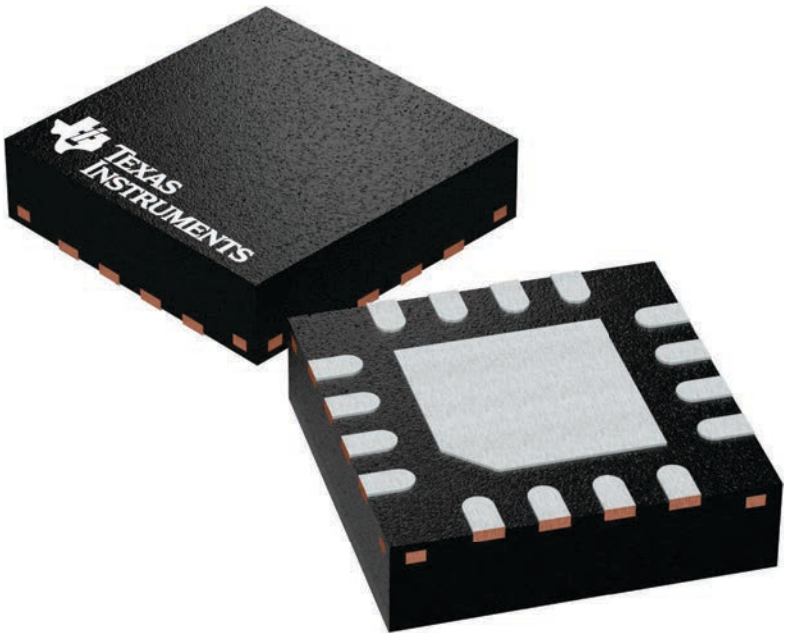

RTE0016K

PACKAGE OUTLINE

WQFN - 0.8 mm max height

PLASTIC QUAD FLATPACK - NO LEAD

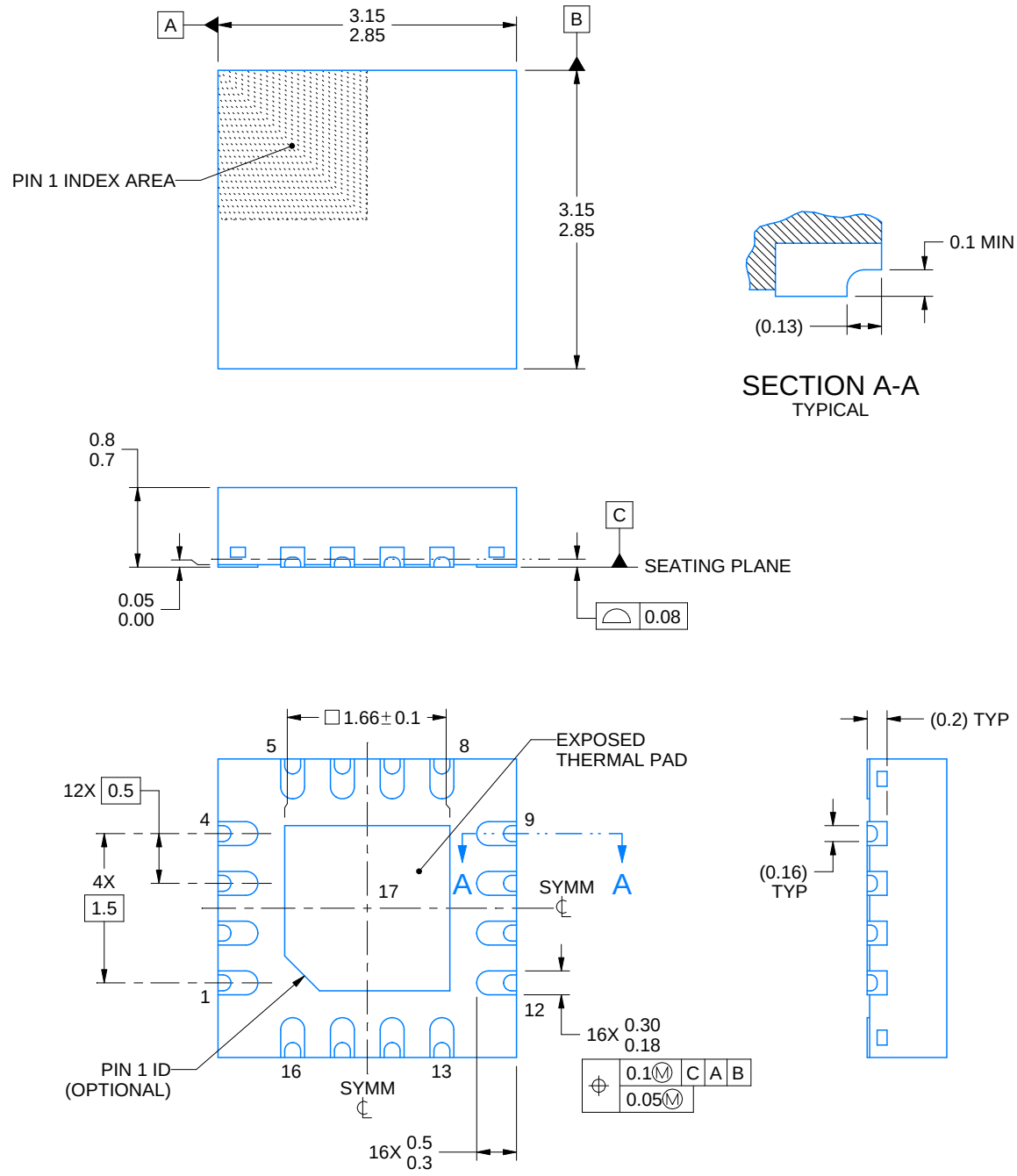

NOTES:

1. All linear dimensions are in millimeters. Any dimensions in parenthesis are for reference only. Dimensioning and tolerancing per ASME Y14.5M.
2. This drawing is subject to change without notice.
3. The package thermal pad must be soldered to the printed circuit board for thermal and mechanical performance.

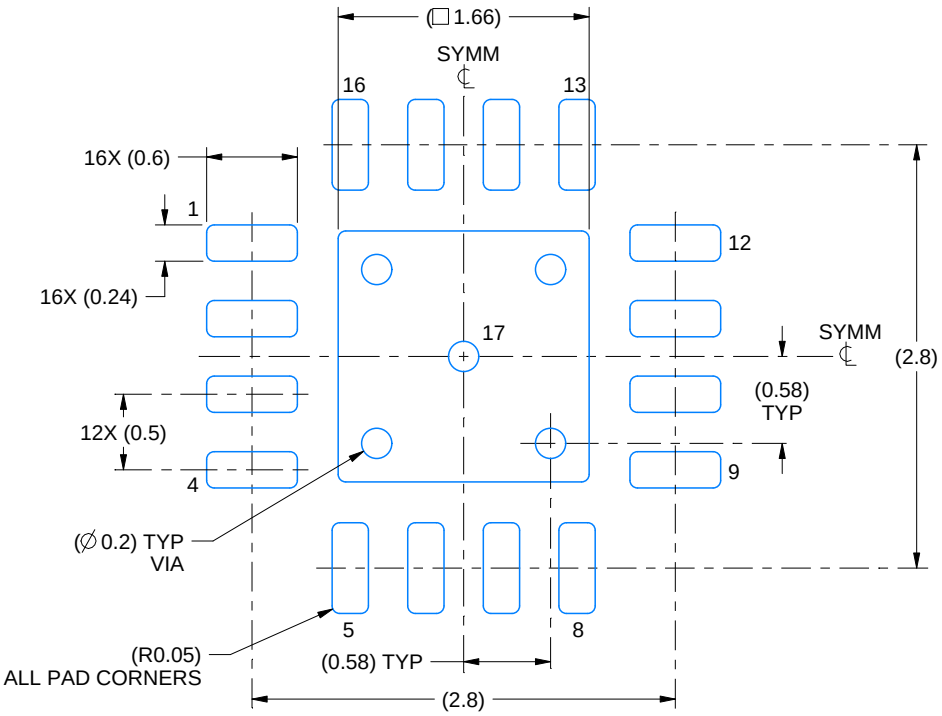

LAND PATTERN EXAMPLE
EXPOSED METAL SHOWN
SCALE:20X

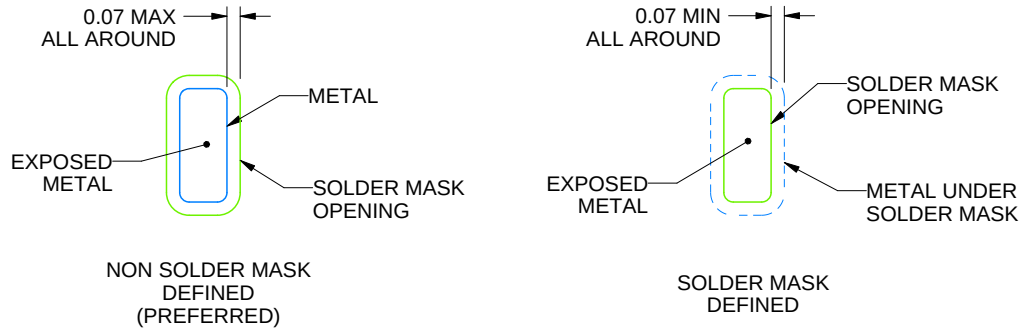

SOLDER MASK DETAILS

4224938/B 06/2019

NOTES: (continued)

4. This package is designed to be soldered to a thermal pad on the board. For more information, see Texas Instruments literature number SLUA271 (www.ti.com/lit/slua271).
5. Vias are optional depending on application, refer to device data sheet. If any vias are implemented, refer to their locations shown on this view. It is recommended that vias under paste be filled, plugged or tented.

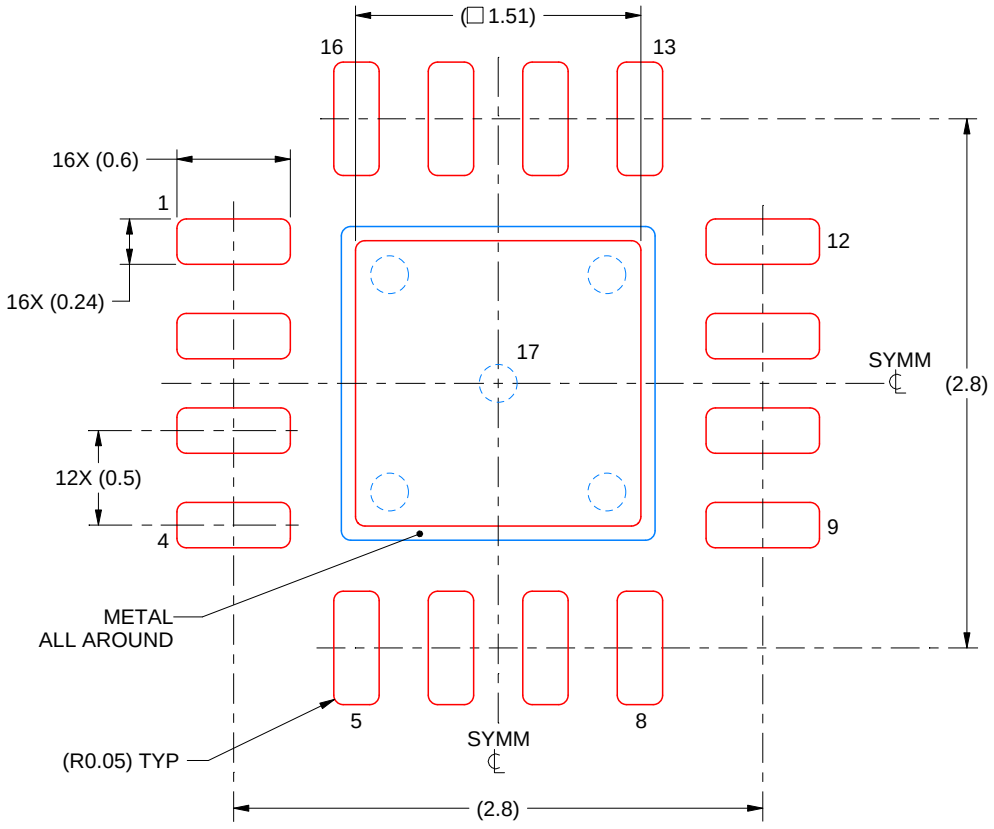

SOLDER PASTE EXAMPLE
BASED ON 0.125 mm THICK STENCIL

EXPOSED PAD 17:
84% PRINTED SOLDER COVERAGE BY AREA UNDER PACKAGE
SCALE:25X

4224938/B 06/2019

NOTES: (continued)

6. Laser cutting apertures with trapezoidal walls and rounded corners may offer better paste release. IPC-7525 may have alternate design recommendations.

重要声明和免责声明

TI“按原样”提供技术和可靠性数据（包括数据表）、设计资源（包括参考设计）、应用或其他设计建议、网络工具、安全信息和其他资源，不保证没有瑕疵且不做出任何明示或暗示的担保，包括但不限于对适销性、某特定用途方面的适用性或不侵犯任何第三方知识产权的暗示担保。

这些资源可供使用 TI 产品进行设计的熟练开发人员使用。您将自行承担以下全部责任：(1) 针对您的应用选择合适的 TI 产品，(2) 设计、验证并测试您的应用，(3) 确保您的应用满足相应标准以及任何其他功能安全、信息安全、监管或其他要求。

这些资源如有变更，恕不另行通知。TI 授权您仅可将这些资源用于研发本资源所述的 TI 产品的应用。严禁对这些资源进行其他复制或展示。您无权使用任何其他 TI 知识产权或任何第三方知识产权。您应全额赔偿因在这些资源的使用中对 TI 及其代表造成的任何索赔、损害、成本、损失和债务，TI 对此概不负责。

TI 提供的产品受 TI 的销售条款或 ti.com 上其他适用条款/TI 产品随附的其他适用条款的约束。TI 提供这些资源并不会扩展或以其他方式更改 TI 针对 TI 产品发布的适用的担保或担保免责声明。

TI 反对并拒绝您可能提出的任何其他或不同的条款。

邮寄地址：Texas Instruments, Post Office Box 655303, Dallas, Texas 75265
Copyright © 2022，德州仪器 (TI) 公司