TUSB522P 3.3V 双通道 USB 3.1 GEN 1 转接驱动器、均衡器

1 特性

- USB3.1 GEN 1 5Gbps 双通道转接驱动器，由 3.3V 电源供电运行
- 超低功耗架构
  - 工作：98mA
  - U2、U3：1.2mA
  - 断开：265µA
  - 关断：60µA
- 绝佳接收器均衡
  - 3dB、6dB 和 9dB 三种增益设置（2.5GHz 时）
- 输出驱动器去加重功能，0dB、3.5dB 和 6dB 三种配置可供选择
- 自动低频周期信号 (LFPS) 去加重控制，满足 USB 3.1 认证要求
- 无主机/设备端要求
- 支持热插拔
- 工业级温度范围：-40ºC 至 85ºC (TUSB522PI)
- 商业级温度范围：0ºC 至 70ºC (TUSB522P)

2 应用

- 手机
- 平板电脑
- 笔记本电脑
- 台式机
- 扩展坞
- 背板和有源电缆

3 说明

TUSB522P 是一款支持 5Gbps 数据传输速率的第四代双单工通道 USB 3.1 GEN 1 转接驱动器和信号调节器。该器件采用超低功耗架构，在由 3.3V 电源供电运行时功耗非常低。转接驱动器还支持 USB 3.1 低功耗模式，可进一步降低空闲状态下的功耗。

双通道能力使得该系统能够在发送和接收数据路径上保持信号的完整性。接收器均衡有三种增益设置，用以克服插入损耗和码间串扰造成的通道性能退化。这些设置由 EQ 引脚控制。为了补偿传输线路损耗，输出驱动器还支持使用引脚 DE 配置去加重功能。此外，自动 LFPS 去加重控制有助于实现与 USB 3.1 完全兼容。这些设置使得 USB 3.1 第 1 代路径中的 TUSB522P 能够达到最佳性能，并延长信号传输距离以及实现灵活安置。

器件信息(1)

器件型号	封装	封装尺寸（标称值）
TUSB522P	VQFN (24)	4.00mm x 4.00mm
TUSB522PI		

(1) 如需了解所有可用封装，请参阅数据表末尾的可订购产品附录。

简化原理图

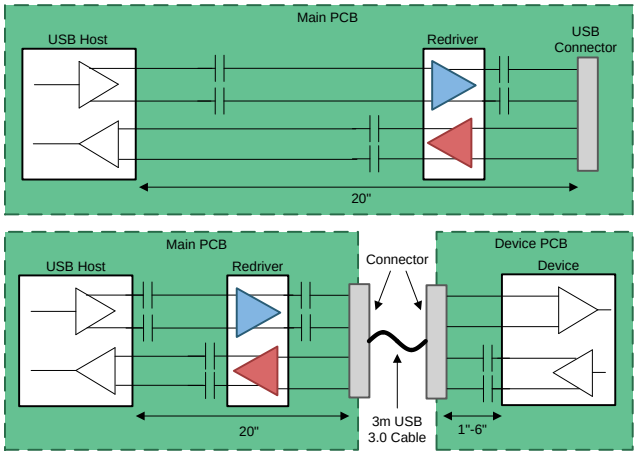

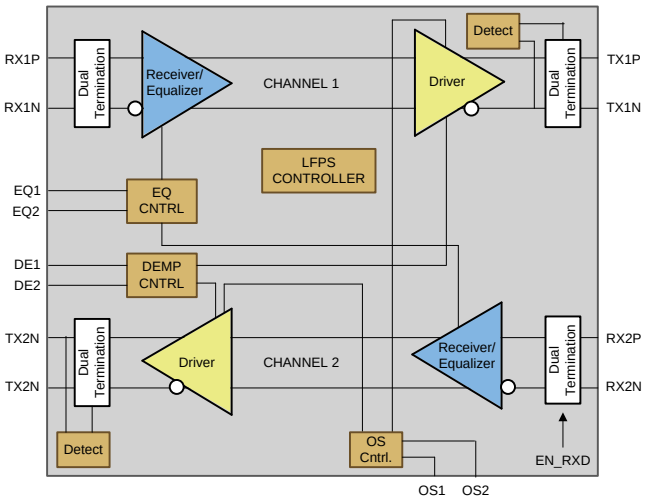

Copyright © 2016, Texas Instruments Incorporated

本文档旨在为方便起见，提供有关 TI 产品中文版本的信息，以确认产品的概要。 有关适用的官方英文版本的最新信息，请访问 www.ti.com，其内容始终优先。 TI 不保证翻译的准确性和有效性。 在实际设计之前，请务必参考最新版本的英文版本。

目录

1 特性 ... 1
2 应用 ... 1
3 说明 ... 1
4 修订历史记录 ... 2
5 **Pin Configuration and Functions** ... 3
6 **Specifications** ... 4
6.1 Absolute Maximum Ratings ... 4
6.2 ESD Ratings ... 4
6.3 Recommended Operating Conditions ... 4
6.4 Thermal Information ... 5
6.5 Electrical Characteristics, Power Supply ... 5
6.6 Electrical Characteristics, DC ... 5
6.7 Electrical Characteristics, AC ... 6
7 **Detailed Description** ... 8
7.1 Overview ... 8
7.2 Functional Block Diagram ... 8
7.3 Feature Description ... 9
7.4 Device Functional Modes ... 10
8 **Application and Implementation** ... 11
8.1 Application Information ... 11
8.2 Typical Application ... 11
9 **Power Supply Recommendations** ... 13
10 **Layout** ... 14
10.1 Layout Guidelines ... 14
10.2 Layout Example ... 14
11 器件和文档支持 ... 15
11.1 文档支持 ... 15
11.2 相关链接 ... 15
11.3 接收文档更新通知 ... 15
11.4 社区资源 ... 15
11.5 商标 ... 15
11.6 静电放电警告 ... 15
11.7 Glossary ... 15
12 机械、封装和可订购信息 ... 15

4 修订历史记录

Changes from Revision C (May 2019) to Revision D — **Page**

- Changed pin 11 From: TX1N To: TX2N and pin 12 From: TX1P To: TX2P in Figure 2 ... 11

Changes from Revision B (November 2017) to Revision C — **Page**

- 删除了 RGE0024F 机械页面 ... 15

Changes from Revision A (October 2016) to Revision B — **Page**

- Changed the values in the FOR OS = HIGH column of Table 1 ... 10

Changes from Original (July 2016) to Revision A — **Page**

- 已将器件状态从“产品预览”更改为“量产数据” ... 1

Copyright © 2016–2019, Texas Instruments Incorporated

5 Pin Configuration and Functions

RGE Package
24-Pin (VQFN)
Top View

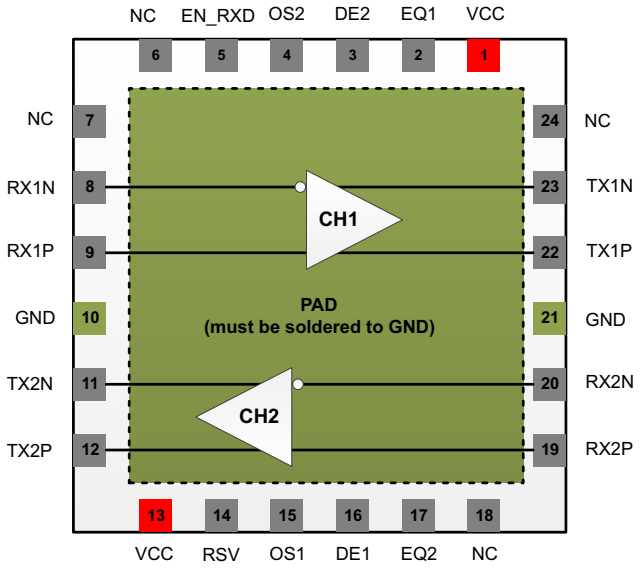

Pin Functions

PIN		I/O	DESCRIPTION
NAME	NO.		
RX1N	8	Differential I	Differential input for 5 Gbps negative signal on Channel 1
RX1P	9	Differential I	Differential input for 5 Gbps positive signal on Channel 1
TX1N	23	Differential O	Differential output for 5 Gbps negative signal on Channel 1
TX1P	22	Differential O	Differential output for 5 Gbps positive signal on Channel 1
RX2N	20	Differential I	Differential input for 5 Gbps negative signal on Channel 2
RX2P	19	Differential I	Differential input for 5 Gbps positive signal on Channel 2
TX2N	11	Differential O	Differential output for 5 Gbps negative signal on Channel 2
TX2P	12	Differential O	Differential output for 5 Gbps positive signal on Channel 2
EQ1	2	I, CMOS	Sets the receiver equalizer gain for Channel 1. 3-state input with integrated pull-up and pull-down resistors. EQ1 = Low = 3 dB EQ1 = Mid = 6 dB EQ1 = High = 9 dB
DE1	16	I, CMOS	Sets the output de-emphasis for Channel 1. 3-state input with integrated pull-up and pull-down resistors. DE1 = Low = 0 dB DE1 = Mid = -3.5 dB DE1 = High = -6.2 dB Note: When OS = Low
OS1	15	I, CMOS	Sets the output swing (differential voltage amplitude) for Channel 1. 2-state input with an integrated pull down resistor. OS1 = Low = 0.9 mV OS1 = High = 1.1 mV
EQ2	17	I, CMOS	Sets the receiver equalizer gain for Channel 2. 3-state input with integrated pull-up and pull-down resistors. EQ2 = Low = 3 dB EQ2 = Mid = 6 dB EQ2 = High = 9 dB

Copyright © 2016–2019, Texas Instruments Incorporated

Pin Functions (continued)

PIN		I/O	DESCRIPTION
NAME	NO.		
DE2	3	I, CMOS	Sets the output de-emphasis for Channel 2. 3-state input with integrated pull-up and pull-down resistors. DE2 = Low = 0 dB DE2 = Mid = -3.5 dB DE2 = High = -6.2 dB Note: When OS = Low
OS2	4	I, CMOS	Sets the output swing (differential voltage amplitude) for Channel 2. 2-state input with an integrated pull down resistor. OS2 = Low = 0.9 mV OS2 = High = 1.1 mV
EN_RXD	5	I, CMOS	Enable. The device has a 660-kΩ pulldown resistor. Device is active when EN_RXD = High. Drive actively high or install a pullup resistor (recommend 4.7 KΩ) for normal operation. Does reset state machine.
RSV	14	I, CMOS	Reserved. Can be left as No-connect.
VCC	1, 13	P	Positive Power Supply. Power Supply is 3.3 V.
GND	10, 21, PAD	G	Ground. PAD must be connected to Ground. Pins 10, 21 can be connected to Ground or left unconnected.
NC	6, 7, 18, 24		No Connection. These pins can be tied to any desired voltages including connecting them to GND.

6 Specifications

6.1 Absolute Maximum Ratings

over operating free-air temperature range (unless otherwise noted)[1]

		MIN	MAX	UNIT
Supply Voltage Range[2]	V_{CC}	–0.5	4	V
Voltage Range at any input or output terminal	Differential I/O	–0.5	1.5	V
	CMOS Inputs	–0.5	4	V
Junction temperature, T_J			105	°C
Storage temperature, T_{stg}		–65	150	°C

(1) Stresses beyond those listed under *Absolute Maximum Ratings* may cause permanent damage to the device. These are stress ratings only, which do not imply functional operation of the device at these or any other conditions beyond those indicated under *Recommended Operating Conditions*. Exposure to absolute-maximum-rated conditions for extended periods may affect device reliability.
(2) All voltage values are with respect to the GND terminals.

6.2 ESD Ratings

		VALUE	UNIT
$V_{(ESD)}$ Electrostatic discharge	Human-body model (HBM), per ANSI/ESDA/JEDEC JS-001[1]	±2000	V
	Charged-device model (CDM), per JEDEC specification JESD22-C101[2]	±500	

(1) JEDEC document JEP155 states that 500-V HBM allows safe manufacturing with a standard ESD control process.
(2) JEDEC document JEP157 states that 250-V CDM allows safe manufacturing with a standard ESD control process.

6.3 Recommended Operating Conditions

over operating free-air temperature range (unless otherwise noted)

			MIN	NOM	MAX	UNIT
V_{CC}	Main power supply		3	3.3	3.6	V
	Supply Ramp Requirement				100	ms
$V_{(PSN)}$	Supply Noise on V_{CC} Terminals				100	mV
T_A	Operating free-air temperature	TUSB522P	0		70	°C
		TUSB522PI	–40		85	°C
$C_{(AC)}$	AC coupling capacitor		75	100	200	nF

Copyright © 2016–2019, Texas Instruments Incorporated

6.4 Thermal Information

THERMAL METRIC[1]		TUSB522P RGE (VQFN) 24 PINS	UNIT
$R_{\theta JA}$	Junction-to-ambient thermal resistance	51.2	°C/W
$R_{\theta JC(top)}$	Junction-to-case (top) thermal resistance	55.9	°C/W
$R_{\theta JB}$	Junction-to-board thermal resistance	28.3	°C/W
ψ_{JT}	Junction-to-top characterization parameter	2.0	°C/W
ψ_{JB}	Junction-to-board characterization parameter	28.3	°C/W
$R_{\theta JC(bot)}$	Junction-to-case (bottom) thermal resistance	9.7	°C/W

(1) For more information about traditional and new thermal metrics, see the *Semiconductor and IC Package Thermal Metrics* application report.

6.5 Electrical Characteristics, Power Supply

over operating free-air temperature range (unless otherwise noted)

PARAMETER		TEST CONDITIONS	MIN	TYP	MAX	UNIT
$I_{CC(ACTIVE)}$	Average active current	Link in U0 with GEN1 data transmission. RSV, EQ cntrl pins = NC, EN_RXD = V_{CC}, k28.5 pattern at 5 Gbps, V_{ID} = 1000 mVpp, OS = 900 mV and DE = 3.5 dB		98		mA
$I_{CC(U2U3)}$	Average current in U2/U3	Link in U2 or U3		1.2		mA
$I_{CC(NC)}$	Average current disconnect mode	Link in Disconnect mode		265		µA
$I_{CC(SHUTDOWN)}$	Average shutdown current	EN_RXD = L		60		µA

6.6 Electrical Characteristics, DC

over operating free-air temperature range (unless otherwise noted)

PARAMETER		TEST CONDITIONS	MIN	TYP	MAX	UNIT
3-State CMOS Inputs(EQ1/2, DE1/2)						
V_{IH}	High-level input voltage		V_{CC} x 0.8			V
V_{IM}	Mid-level input voltage			V_{CC} / 2.		V
V_{IL}	Low-level input voltage				V_{CC} x 0.2	V
V_F	Floating voltage	V_{IN} = High impedance		0.36 x V_{CC}		V
R_{PU}	Internal pull-up resistance			410		kΩ
R_{PD}	Internal pull-down resistance			240		kΩ
I_{IH}	High-level input current	V_{IN} = 3.6 V			26	µA
I_{IL}	Low-level input current	V_{IN} = GND, V_{CC} = 3.6.V	–26			µA
2-State CMOS Input (OS1/2, EN_RXD)						
V_{IH}	High-level input voltage		V_{CC} x 0.7			V
V_{IL}	Low-level input voltage				V_{CC} x 0.3	V
R_{PD}	Internal pull-down resistance			660		kΩ
I_{IH}	Low-level input current	V_{IN} = 3.6 V			25	µA
I_{IL}	Low-level input current	V_{IN} = GND, V_{CC} = 3.6.V	–10			µA

Copyright © 2016–2019, Texas Instruments Incorporated

6.7 Electrical Characteristics, AC

over operating free-air temperature range (unless otherwise noted)

PARAMETER		TEST CONDITIONS	MIN	TYP	MAX	UNIT
Differential Receiver (RXP, RXN)						
$V_{(RX-DIFF-PP)}$	Input differential voltage swing.	AC-coupled differential peak-to-peak signal measured post CTLE through a reference channel	100		1200	mVpp
$V_{(RX-DC-CM)}$	Common-mode voltage bias in the receiver (DC)			0.7		V
$R_{(RX-DIFF-DC)}$	Differential input impedance (DC)	Present after a GEN1 device is detected on TXP/TXN	72		120	Ω
$R_{(RX-CM-DC)}$	Receiver DC Common Mode impedance		18		30	Ω
$Z_{(RX-HIGH-IMP-DC-POS)}$	Common-mode input impedance with termination disabled (DC)	Present when no GEN1 device is detected on TXP/TXN. Measured over the range of 0-500 mV with respect to GND.	25			kΩ
$V_{(RX-SIGNAL-DET-DIFF-PP)}$	Input Differential peak-to-peak Signal Detect Assert Level	At 5 Gbps, no input channel loss clock pattern		85		mV
$V_{(RX-IDLE-DET-DIFF-PP)}$	Input Differential peak-to-peak Signal Detect De-assert Level			85		mV
$V_{(RX-LFPS-DET-DIFF-PP)}$	Low Frequency Periodic Signaling (LFPS) Detect Threshold	Below the minimum is squelched.	100		300	mV
$V_{(RX-CM-AC-P)}$	Peak RX AC common mode voltage	Measured at package pin			150	mV
$V_{(detect)}$	Voltage change to allow receiver detect	Positive voltage to sense receiver termination			600	mV
$C_{(RX-PARASITIC)}$	Voltage change to allow receiver detect	At 2.5 GHz	0.17	0.63	0.99	pF
$R_{L(RX-DIFF)}$	Differential Return Loss	50 MHz – 1.25 GHz at 90 Ω		–19		dB
		2.5 GHz at 90 Ω		–14		dB
$R_{L(RX-CM)}$	Common Mode Return Loss	50 MHz – 1.25 GHz at 90 Ω		–13		dB
Differential Transmitter (TXP, TXN)						
$V_{(TX-DIFF-PP)}$	Transmitter differential voltage swing (transition-bit)	OS Low, 0dB DE	0.8	0.9		Vpp
		OS High, 0dB DE		1.1	1.2	Vpp
$V_{(TX-DIFF-PP-LFPS)}$	LFPS differential voltage swing	OS Low, High	0.8		1.2	Vpp
$V_{(TX-DE-RATIO)}$	Transmitter differential voltage De-Emphasis ratio	DE = Low		0		dB
		DE = Floating		–3.5		dB
		DE = High		–6.2		dB
$V_{(TX-RCV-DETECT)}$	Amount of voltage change allowed during Receiver Detection				600	mV
$V_{(TX-CM-IDLE-DELTA)}$	Transmitter idle common-mode voltage change while in U2/U3 and not actively transmitting LFPS		–600		600	mV
$V_{(TX-DC-CM)}$	Common-mode voltage bias in the transmitter (DC)			0.7		V
$V_{(TX-CM-AC-PP-ACTIVE)}$	Tx AC Common-mode voltage active	Max mismatch from Txp + Txn for both time and amplitude			100	mVpp
$V_{(TX-IDLE-DIFF-AC-PP)}$	AC Electrical idle differential peak-to-peak output voltage	At package pins	0		10	mV
$V_{(TX-IDLE-DIFF-DC)}$	DC Electrical idle differential output voltage	At package pins after low pass filter to remove AC component	0		10	mV
$V_{(TX-CM-DC-ACTIVE-IDLE-DELTA)}$	Absolute DC common mode voltage between U1 and U0	At package pin			200	mV
$C_{(TX)}$	TX input capacitance to GND	At 2.5 GHz			1.25	pF
$R_{(TX-DIFF)}$	Differential impedance of the driver		72		120	Ω
$R_{(TX-CM)}$	Common-mode impedance of the driver	Measured with respect to AC ground over 0-500 mV	18		30	Ω
$I_{(TX-SHORT)}$	TX short circuit current	TX± shorted to GND			60	mA
$C_{(TX-PARASITIC)}$	TX input capacitance for return loss	Package Pins		0.63	1.02	F
$R_{L(RX-DIFF)}$	Differential Return Loss	50 MHz – 1.25 GHz at 90 Ω		12		dB
		1.25 – 2.5 GHz at 90 Ω		8		dB

Copyright © 2016–2019, Texas Instruments Incorporated

Electrical Characteristics, AC (continued)

over operating free-air temperature range (unless otherwise noted)

PARAMETER		TEST CONDITIONS	MIN	TYP	MAX	UNIT
$R_{L(RX-CM)}$	Common Mode Return Loss	50 MHz – 1.25 GHz at 90 Ω		13		dB
		1.25 –2.5 GHz		11		dB
AC Characteristic						
Xtalk	Differential Cross Talk between TX and RX signal Pairs	At 2.5 GHz		–40		dB
$V_{(CM-TX-AC)}$	AC Common-mode voltage swing in active mode	Within U0 and within LFPS			100	mVpp
$V_{(TX-IDLE-DIFF-AC-PP)}$	Differential voltage swing during electrical idle	Tested with a high-pass filter	0		10	V
$R_{L(TX-DIFF)}$	Differential Return Loss	f = 50 MHz - 1.25 GHz		12		dB
		1.25 –2.5 Ghz		8		dB
$R_{L(TX-CM)}$	Common Mode Return Loss	f = 50 MHz - 1.25 GHz		16		dB
		1.25 –2.5 GHz		13		dB
t_J	Total Jitter	Minimum input and output trace at 2.5 GHz, V_{CC} = 3.3 V		15		ps
$V_{(TX-CM-\Delta U1-U0)}$	Absolute delta of DC CM voltage during active and idle states				100	mV
$V_{(TX-IDLE-DIFF-DC)}$	DC Electrical idle differential output voltage	Voltage must be low pass filtered to remove any AC component	0		12	mV

Copyright © 2016–2019, Texas Instruments Incorporated

7 Detailed Description

7.1 Overview

The TUSB522P is designed to overcome channel loss due to inter-symbol interference and crosstalk when 5 Gbps USB3.1 GEN1 signals travel across a PCB or cable. The dual channel architecture is a one-chip, low-power solution, extending the possible channel length for transmit and receive data paths in an application. For a Host application, this enables the system to pass both transmitter compliance and receiver jitter tolerance tests.

The re-driver recovers incoming data by applying equalization that compensates for channel loss, and drives out signals with a high differential voltage. Each channel has a receiver equalizer with selectable gain settings. The equalization should be set based on the amount of insertion loss in channel 1 or 2 before the TUSB522P receivers. Likewise, the output drivers support configuration of De-Emphasis. Independent equalization and de-emphasis control for each channel can be set using EQ1/2 and DE1/2 pins.

The TUSB522P advanced state machine makes it transparent to hosts and devices. After power up, the TUSB522P periodically performs receiver detection on the TX pairs. If it detects a USB3.1 GEN1 receiver, the RX termination is enabled, and the TUSB522P is ready to re-drive.

The device ultra-low-power architecture operates at a 3.3-V power supply and achieves Enhanced performance. The automatic LFPS De-Emphasis control further enables the system to be USB3.1 compliant.

7.2 Functional Block Diagram

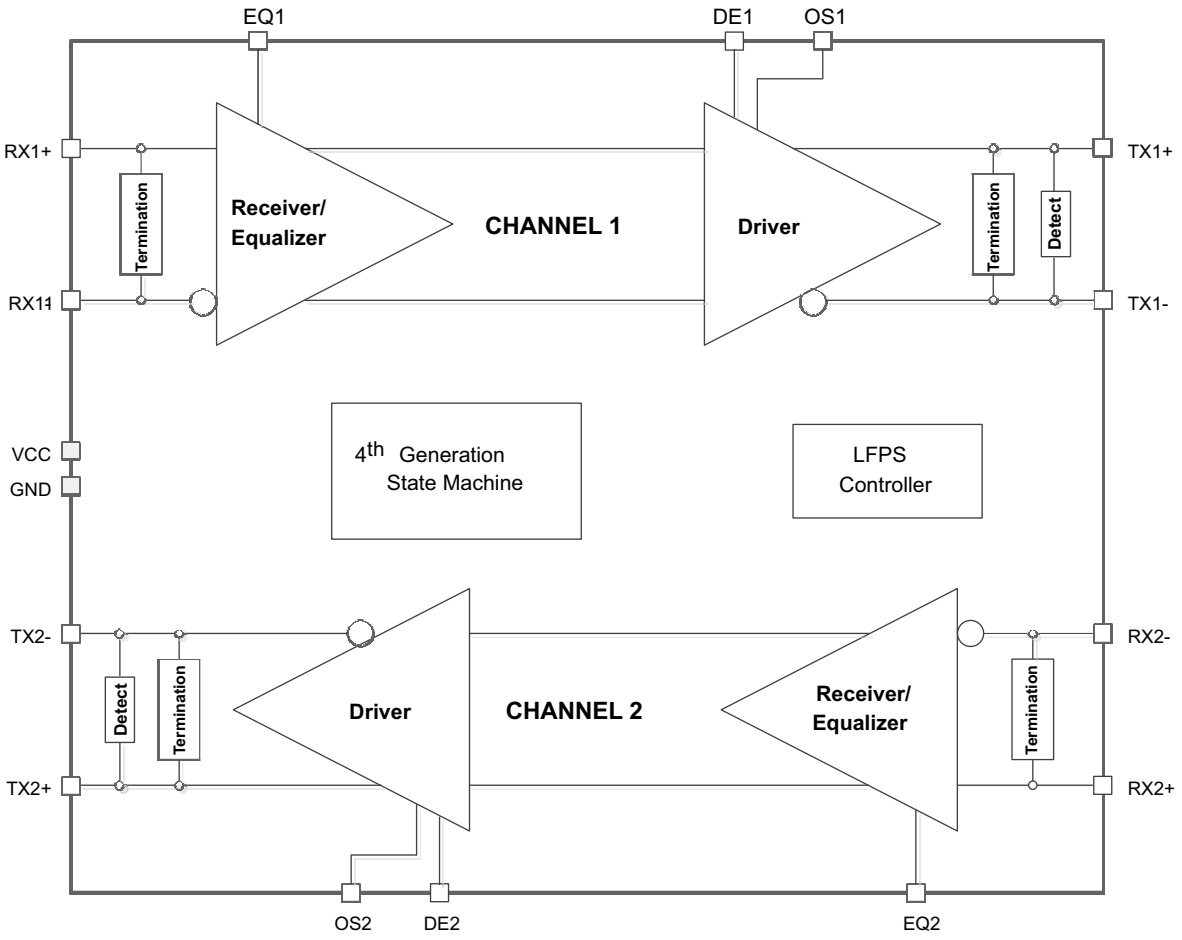

Copyright © 2016–2019, Texas Instruments Incorporated

7.3 Feature Description

7.3.1 Receiver Equalization

The purpose of receiver equalization is to compensate for channel insertion loss and inter-symbol interference in the system before the input of the TUSB522P. The receiver overcomes these losses by attenuating the low frequency components of the signals with respect to the high frequency components. The proper gain setting should be selected to match the channel insertion loss before the input of the TUSB522P receivers. The gain setting may differ for channel 1 and channel 2.

7.3.2 De-Emphasis Control and Output Swing

The differential driver output provides selectable de-emphasis and output swing control in order to achieve USB3.1 compliance. The TUSB522P offers a unique way to adjust output de-emphasis and transmitter swing based on the OS1/2 and DE1/2 pins. The level of de-emphasis required in the system depends on the channel length after the output of the re-driver. The output swing and de-emphasis levels may differ for channel 1 and channel 2.

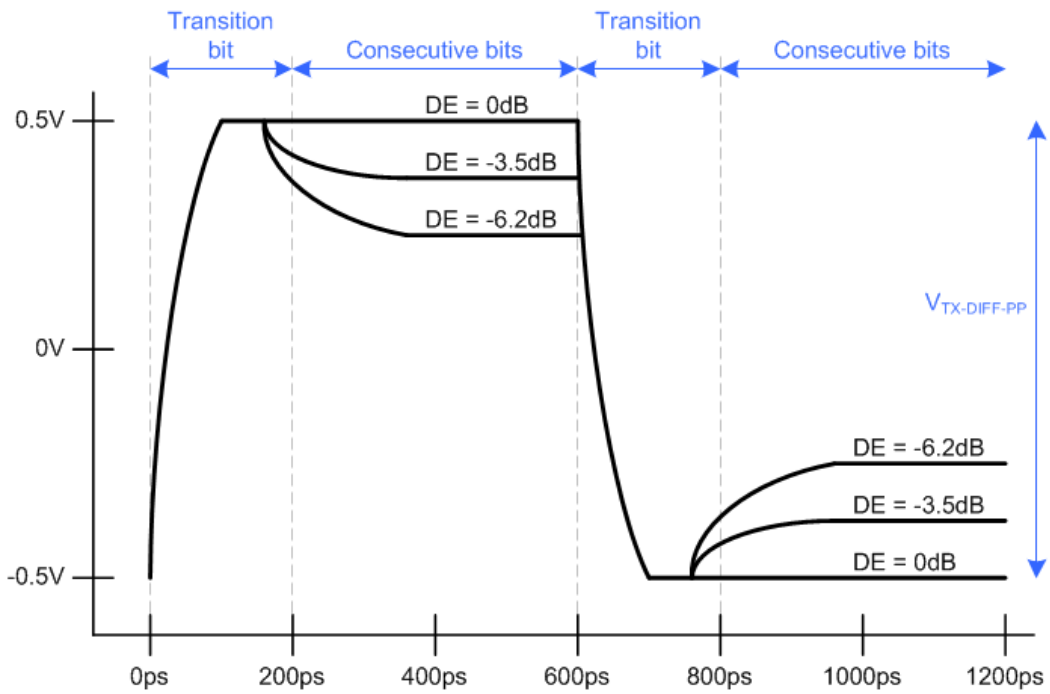

Figure 1. Transmitter Differential Voltage, OS = Floating

7.3.3 Automatic LFPS Detection

The TUSB522P features an intelligent low frequency periodic signaling (LFPS) controller. The controller senses the low frequency signals and automatically disables the driver de-emphasis, for full USB3.1 compliance.

Copyright © 2016–2019, Texas Instruments Incorporated

7.4 Device Functional Modes

7.4.1 Device Configuration

Table 1. Control Pin Settings (Typical Values)

PIN	DESCRIPTION	LOGIC STATE	GAIN	
EQ1/EQ2	Equalization Amount	Low	3 dB	
		Floating	6 dB	
		High	9 dB	
PIN	**DESCRIPTION**	**LOGIC STATE**	**OUTPUT DIFFERENTIAL VOLTAGE FOR THE TRANSISTION BIT**	
OS1/OS2	Output Swing Amplitude	LOW	0.9 Vpp	
		HIGH	1.1 Vpp	
PIN	**DESCRIPTION**	**LOGIC STATE**	**DE-EMPHASIS RATIO**	
			FOR OS = LOW	**FOR OS = HIGH**
DE1/DE2	De-Emphasis Amount	Low	0 dB	0 dB
		Floating	–3.5 dB	–3.5 dB
		High	–6.2 dB	–6.2 dB

7.4.2 Power Modes

The TUSB522P has 3 primary power modes:

7.4.2.1 U0 Mode (Active Power Mode)

During active power mode, U0, the device is transmitting USB SS data or USB LFPS signaling. The U0 mode is the highest power state of the TUSB522P. Anytime super-speed traffic is being received, the TUSB522P remains in this mode.

7.4.2.2 U2/U3 (Low Power Mode)

While in this mode, the TUSB522P periodically performs far-end receiver detection.

7.4.2.3 Disconnect Mode - RX Detect

In this state, the TUSB522P periodically checks for far-end receiver termination on both TX. Upon detection of the far-end receiver's termination on both ports, the TUSB522P will transition to U0 mode.

7.4.2.4 Shutdown Mode

Shutdown mode is entered when the EN_RXD pin is driven low. This is lowest power setting for the device.

Copyright © 2016–2019, Texas Instruments Incorporated

8 Application and Implementation

NOTE

Information in the following applications sections is not part of the TI component specification, and TI does not warrant its accuracy or completeness. TI's customers are responsible for determining suitability of components for their purposes. Customers should validate and test their design implementation to confirm system functionality.

8.1 Application Information

The TUSB522P is a dual-channel single-lane re-driver and signal conditioner designed to compensate for ISI jitter caused by attenuation through passive mediums such as traces or cables. The TUSB522P has two independent channels to allow optimization in both upstream and downstream directions through three EQ and six De-Emphasis settings.

8.2 Typical Application

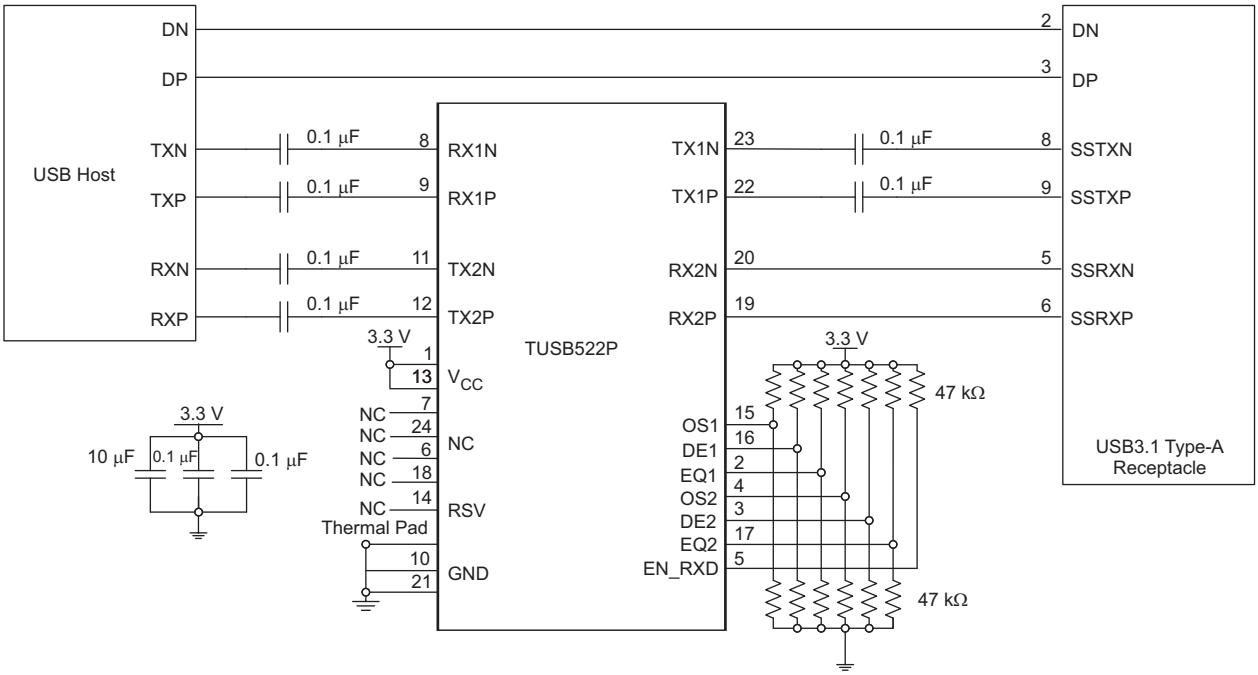

Figure 2. Embedded Host Application

Typical Application (continued)

8.2.1 Design Requirements

For this design example, use the parameters shown in Table 2.

Table 2. Design Parameters

PARAMETERS	VALUE
V_{CC} Supply (3 V – 3.6 V)	3.3 V
AC Coupling Capacitor (75nF to 265nF)	100 nF
Host to TUSB522P FR4 Length (Inches)	20
Host to TUSB522P FR4 Trace Width (mils)	4
TUSB522P to Connector FR4 Length (Inches)	6
TUSB522P to Connector FR4 Trace Width (mils)	4
EQ1 (RX1P/RX1N)	9 dB (EQ1 = High)
De-Emphasis 2 (TX2P/TX2N)	-6.2 dB (OS2 = Low, DE2 = High)
EQ2 (RX2P/RX2N)	6 dB (EQ2 = Floating)
De-Emphasis 1 (TX1P/TX1N)	-3.5 dB (OS1 = Low, DE1 = Floating)
Output Swing 1 (OS1)	900 mV (OS1 = Low)
Output Swing 2 (OS2)	900 mV (OS2 = Low)

8.2.2 Detailed Design Procedure

The TUSB522P differential receivers and transmitters have internal BIAS and termination. Due to this, the TUSB522P must be connected to the USB Host and receptacle through ac-coupling capacitors. In this example, as depicted in Table 1, 100 nF capacitors are placed on TX2P, TX2N, RX1P, RX1N, TX1P and TX1N. No ac-coupling capacitors are placed on the RX2P and RX2N pins because it is assumed the device downstream of the TUSB522P will have ac-coupling capacitors on its transmitter as defined by the USB 3.1 specification.

Copyright © 2016–2019, Texas Instruments Incorporated

8.2.3 Application Curves

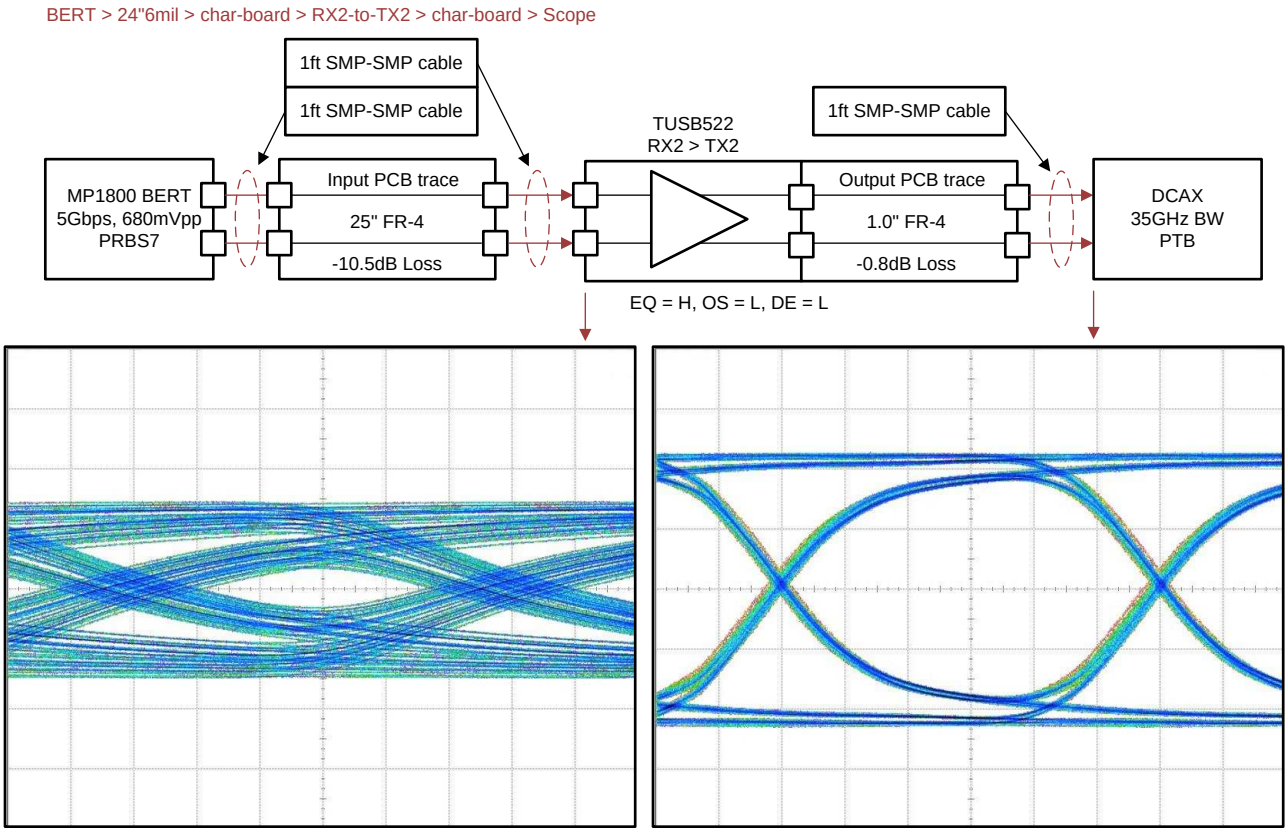

9 Power Supply Recommendations

The TUSB522P is designed to operate with a 3.3-V power supply. Levels above those listed in the Absolute Ratings table should not be used. If using a higher voltage system power supply, a voltage regulator can be used to step down to 3.3 V. Decoupling capacitors should be used to reduce noise and improve power supply integrity. A 0.1-µF capacitor should be used on each power pin.

10 Layout

10.1 Layout Guidelines

- RXP/N and TXP/N pairs should be routed with controlled 90-Ω differential impedance (±15%).
- Keep away from other high speed signals.
- Intra-pair routing should be kept to within 2mils.
- Length matching should be near the location of mismatch.
- Each pair should be separated at least by 3 times the signal trace width.
- The use of bends in differential traces should be kept to a minimum. When bends are used, the number of left and right bends should be as equal as possible and the angle of the bend should be ≥ 135 degrees. This will minimize any length mismatch causes by the bends and therefore minimize the impact bends have on EMI.
- Route all differential pairs on the same of layer.
- The number of VIAS should be kept to a minimum. It is recommended to keep the VIAS count to 2 or less.
- Keep traces on layers adjacent to ground plane.
- Do NOT route differential pairs over any plane split.
- Adding Test points will cause impedance discontinuity; and will therefore, negatively impact signal performance. If test points are used, they should be placed in series and symmetrically. They must not be placed in a manner that causes a stub on the differential pair.
- The 100-nF capacitors on the TXP and SSTXN nets must be placed close to the USB connector (Type A, Type B, and so forth).
- The ESD and EMI protection devices (if used) must also be placed as close as possible to the USB connector.
- Place voltage regulators as far away as possible from the differential pairs.
- In order to minimize crosstalk, TI recommends keeping high-speed signals away from each other. Each pair must be separated by at least 5 times the signal trace width. Separating with ground also helps minimize crosstalk.

10.2 Layout Example

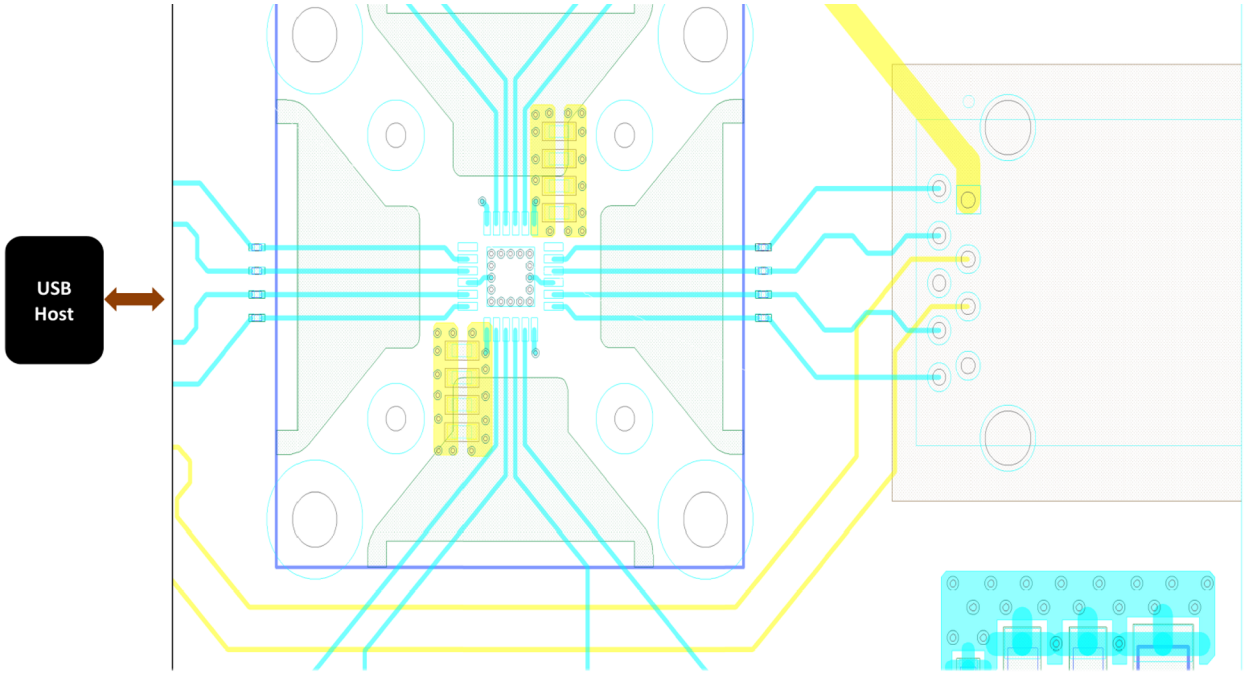

Figure 3. Example Layout

版权 © 2016–2019, Texas Instruments Incorporated

11 器件和文档支持

11.1 文档支持

11.1.1 相关文档

请参阅如下相关文档：

11.2 相关链接

下表列出了快速访问链接。类别包括技术文档、支持与社区资源、工具和软件，以及申请样片或购买产品的快速链接。

11.3 接收文档更新通知

要接收文档更新通知，请导航至 TI.com.cn 上的器件产品文件夹。单击右上角的*通知我* 进行注册，即可每周接收产品信息更改摘要。有关更改的详细信息，请查看任何已修订文档中包含的修订历史记录。

11.4 社区资源

The following links connect to TI community resources. Linked contents are provided "AS IS" by the respective contributors. They do not constitute TI specifications and do not necessarily reflect TI's views; see TI's Terms of Use.

TI E2E™ Online Community ***TI's Engineer-to-Engineer (E2E) Community.*** Created to foster collaboration among engineers. At e2e.ti.com, you can ask questions, share knowledge, explore ideas and help solve problems with fellow engineers.

Design Support ***TI's Design Support*** Quickly find helpful E2E forums along with design support tools and contact information for technical support.

11.5 商标

E2E is a trademark of Texas Instruments.
All other trademarks are the property of their respective owners.

11.6 静电放电警告

ESD 可能会损坏该集成电路。德州仪器 (TI) 建议通过适当的预防措施处理所有集成电路。如果不遵守正确的处理措施和安装程序，可能会损坏集成电路。

ESD 的损坏小至导致微小的性能降级，大至整个器件故障。 精密的集成电路可能更容易受到损坏，这是因为非常细微的参数更改都可能会导致器件与其发布的规格不相符。

11.7 Glossary

SLYZ022 — *TI Glossary*.

This glossary lists and explains terms, acronyms, and definitions.

12 机械、封装和可订购信息

以下页面包含机械、封装和可订购信息。这些信息是指定器件的最新可用数据。数据如有变更，恕不另行通知，且不会对此文档进行修订。如需获取此数据表的浏览器版本，请查阅左侧的导航栏。

PACKAGING INFORMATION

Orderable Device	Status (1)	Package Type	Package Drawing	Pins	Package Qty	Eco Plan (2)	Lead finish/ Ball material (6)	MSL Peak Temp (3)	Op Temp (°C)	Device Marking (4/5)	Samples
TUSB522PIRGER	ACTIVE	VQFN	RGE	24	3000	RoHS & Green	NIPDAU	Level-2-260C-1 YEAR	-40 to 85	TUSB 522P	Samples
TUSB522PIRGET	ACTIVE	VQFN	RGE	24	250	RoHS & Green	NIPDAU	Level-2-260C-1 YEAR	-40 to 85	TUSB 522P	Samples
TUSB522PRGER	ACTIVE	VQFN	RGE	24	3000	RoHS & Green	NIPDAU	Level-2-260C-1 YEAR	0 to 70	TUSB 522P	Samples
TUSB522PRGET	ACTIVE	VQFN	RGE	24	250	RoHS & Green	NIPDAU	Level-2-260C-1 YEAR	0 to 70	TUSB 522P	Samples

(1) The marketing status values are defined as follows:
ACTIVE: Product device recommended for new designs.
LIFEBUY: TI has announced that the device will be discontinued, and a lifetime-buy period is in effect.
NRND: Not recommended for new designs. Device is in production to support existing customers, but TI does not recommend using this part in a new design.
PREVIEW: Device has been announced but is not in production. Samples may or may not be available.
OBSOLETE: TI has discontinued the production of the device.

(2) **RoHS:** TI defines "RoHS" to mean semiconductor products that are compliant with the current EU RoHS requirements for all 10 RoHS substances, including the requirement that RoHS substance do not exceed 0.1% by weight in homogeneous materials. Where designed to be soldered at high temperatures, "RoHS" products are suitable for use in specified lead-free processes. TI may reference these types of products as "Pb-Free".
RoHS Exempt: TI defines "RoHS Exempt" to mean products that contain lead but are compliant with EU RoHS pursuant to a specific EU RoHS exemption.
Green: TI defines "Green" to mean the content of Chlorine (Cl) and Bromine (Br) based flame retardants meet JS709B low halogen requirements of <=1000ppm threshold. Antimony trioxide based flame retardants must also meet the <=1000ppm threshold requirement.

(3) MSL, Peak Temp. - The Moisture Sensitivity Level rating according to the JEDEC industry standard classifications, and peak solder temperature.

(4) There may be additional marking, which relates to the logo, the lot trace code information, or the environmental category on the device.

(5) Multiple Device Markings will be inside parentheses. Only one Device Marking contained in parentheses and separated by a "~" will appear on a device. If a line is indented then it is a continuation of the previous line and the two combined represent the entire Device Marking for that device.

(6) Lead finish/Ball material - Orderable Devices may have multiple material finish options. Finish options are separated by a vertical ruled line. Lead finish/Ball material values may wrap to two lines if the finish value exceeds the maximum column width.

Important Information and Disclaimer: The information provided on this page represents TI's knowledge and belief as of the date that it is provided. TI bases its knowledge and belief on information provided by third parties, and makes no representation or warranty as to the accuracy of such information. Efforts are underway to better integrate information from third parties. TI has taken and

continues to take reasonable steps to provide representative and accurate information but may not have conducted destructive testing or chemical analysis on incoming materials and chemicals.
TI and TI suppliers consider certain information to be proprietary, and thus CAS numbers and other limited information may not be available for release.

In no event shall TI's liability arising out of such information exceed the total purchase price of the TI part(s) at issue in this document sold by TI to Customer on an annual basis.

TAPE AND REEL INFORMATION

REEL DIMENSIONS

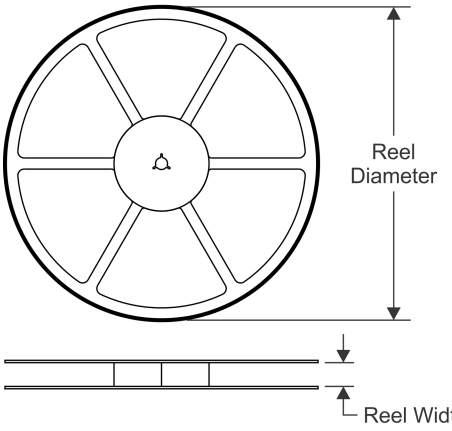

TAPE DIMENSIONS

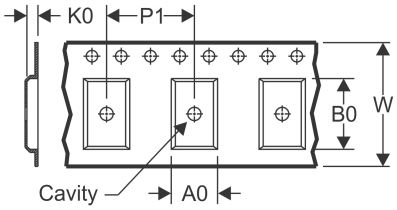

A0	Dimension designed to accommodate the component width
B0	Dimension designed to accommodate the component length
K0	Dimension designed to accommodate the component thickness
W	Overall width of the carrier tape
P1	Pitch between successive cavity centers

QUADRANT ASSIGNMENTS FOR PIN 1 ORIENTATION IN TAPE

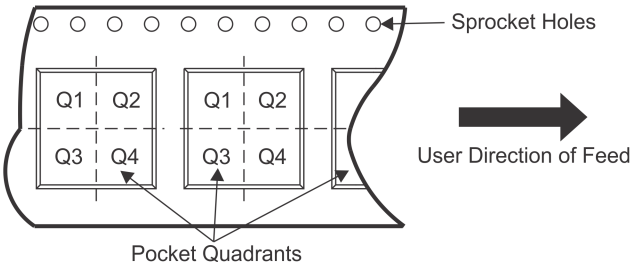

*All dimensions are nominal

Device	Package Type	Package Drawing	Pins	SPQ	Reel Diameter (mm)	Reel Width W1 (mm)	A0 (mm)	B0 (mm)	K0 (mm)	P1 (mm)	W (mm)	Pin1 Quadrant
TUSB522PIRGER	VQFN	RGE	24	3000	330.0	12.4	4.25	4.25	1.15	8.0	12.0	Q2
TUSB522PIRGET	VQFN	RGE	24	250	180.0	12.4	4.25	4.25	1.15	8.0	12.0	Q2
TUSB522PRGER	VQFN	RGE	24	3000	330.0	12.4	4.25	4.25	1.15	8.0	12.0	Q2
TUSB522PRGET	VQFN	RGE	24	250	180.0	12.4	4.25	4.25	1.15	8.0	12.0	Q2

TAPE AND REEL BOX DIMENSIONS

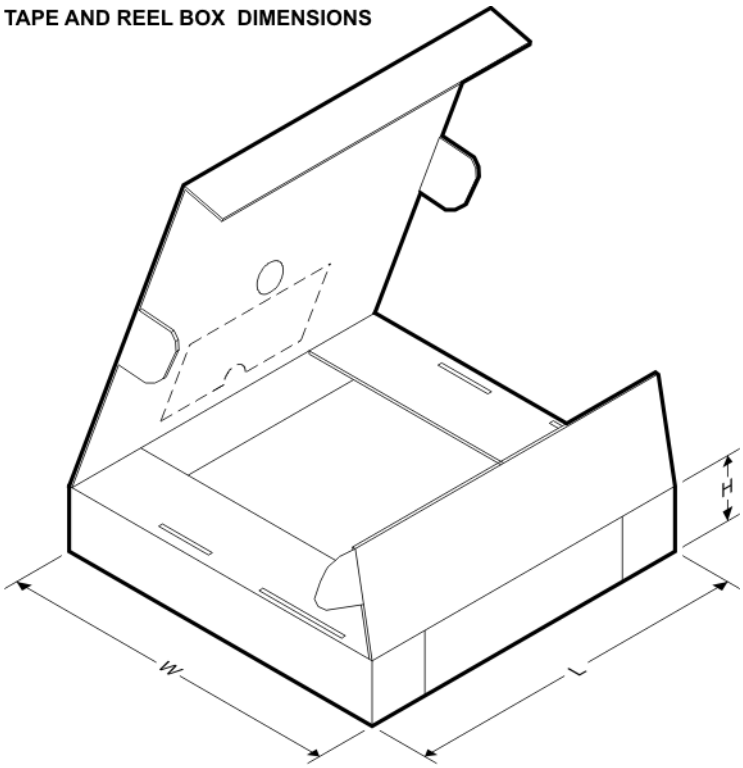

*All dimensions are nominal

Device	Package Type	Package Drawing	Pins	SPQ	Length (mm)	Width (mm)	Height (mm)
TUSB522PIRGER	VQFN	RGE	24	3000	853.0	449.0	35.0
TUSB522PIRGET	VQFN	RGE	24	250	210.0	185.0	35.0
TUSB522PRGER	VQFN	RGE	24	3000	853.0	449.0	35.0
TUSB522PRGET	VQFN	RGE	24	250	210.0	185.0	35.0

RGE 24 VQFN - 1 mm max height

PLASTIC QUAD FLATPACK - NO LEAD

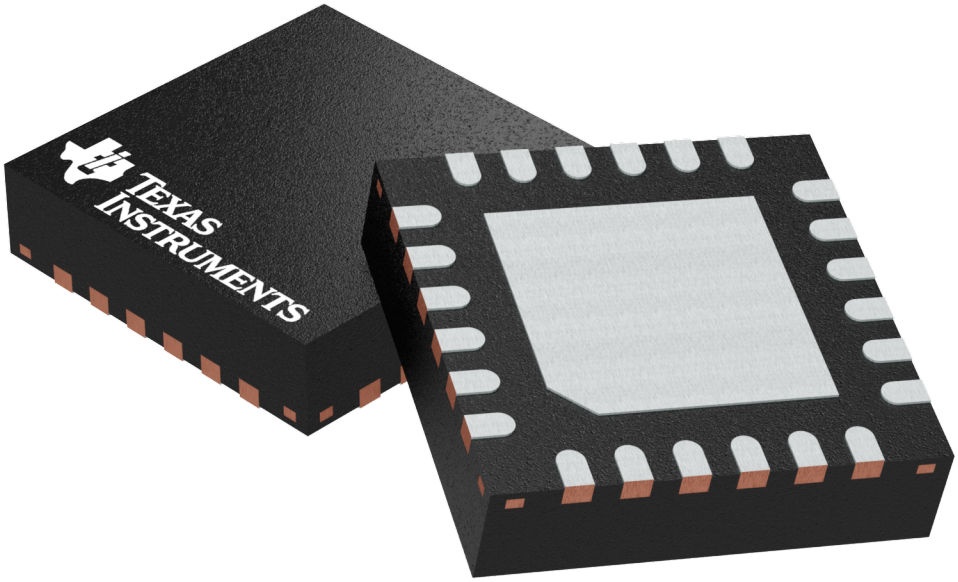

Images above are just a representation of the package family, actual package may vary.
Refer to the product data sheet for package details.

PLASTIC QUAD FLATPACK- NO LEAD

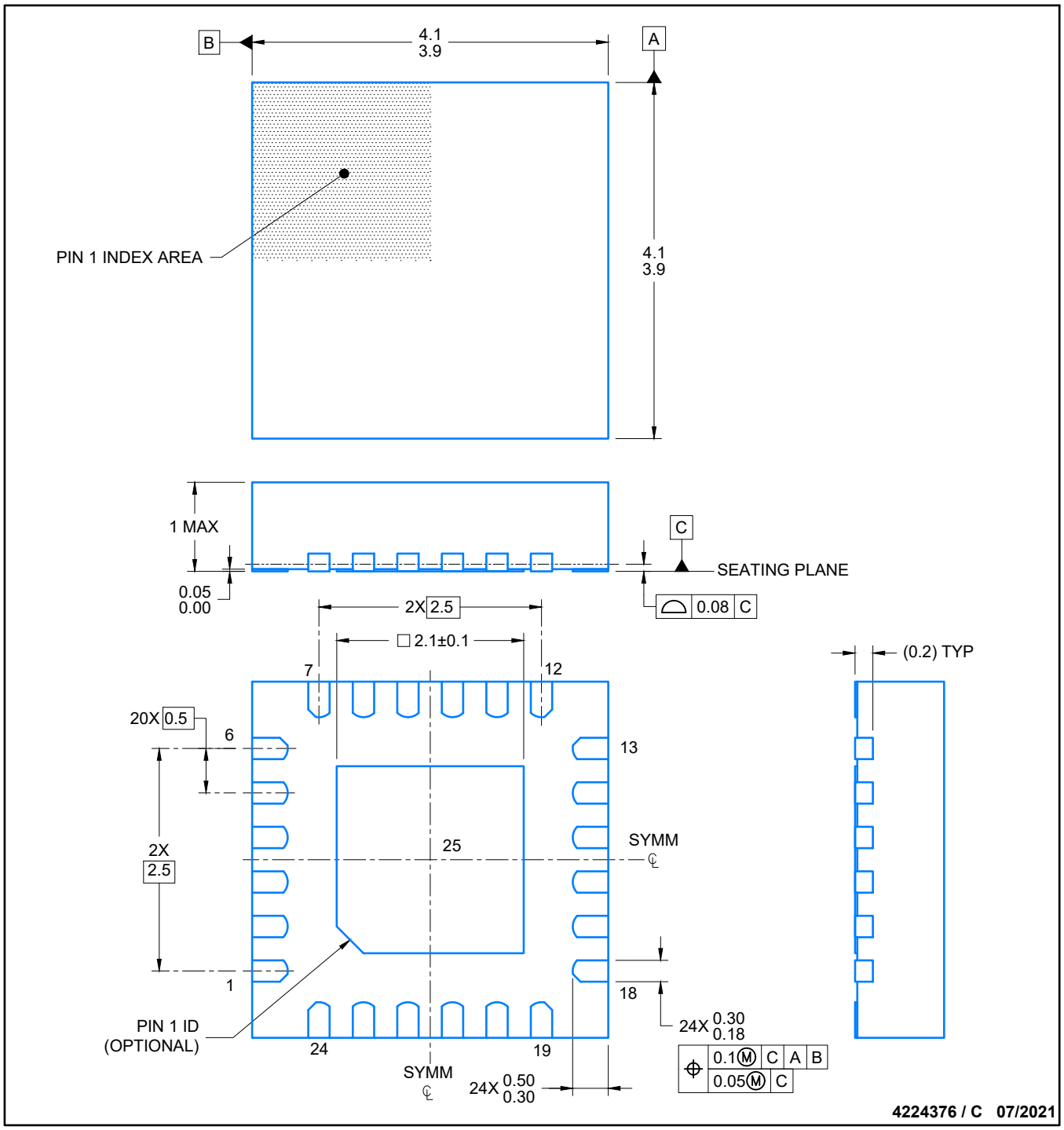

NOTES:

1. All linear dimensions are in millimeters. Any dimensions in parenthesis are for reference only. Dimensioning and tolerancing per ASME Y14.5M.
2. This drawing is subject to change without notice.
3. The package thermal pad must be soldered to the printed circuit board for thermal and mechanical performance.

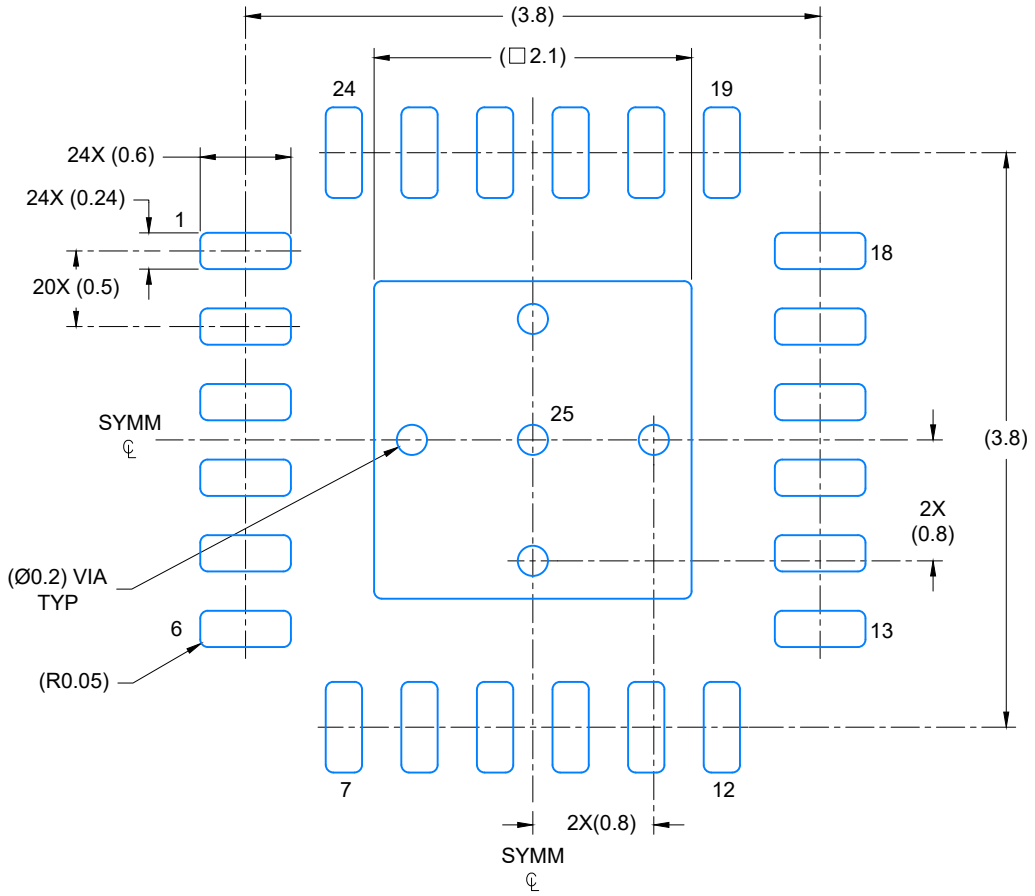

LAND PATTERN EXAMPLE
SCALE: 20X

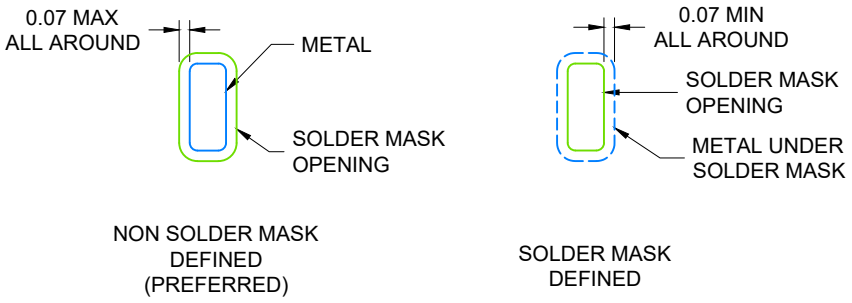

SOLDER MASK DETAILS

4224376 / C 06/2021

NOTES: (continued)

4. This package is designed to be soldered to a thermal pad on the board. For more information, see Texas Instruments literature number SLUA271 (www.ti.com/lit/slua271).
5. Solder mask tolerances between and around signal pads can vary based on board fabrication site.

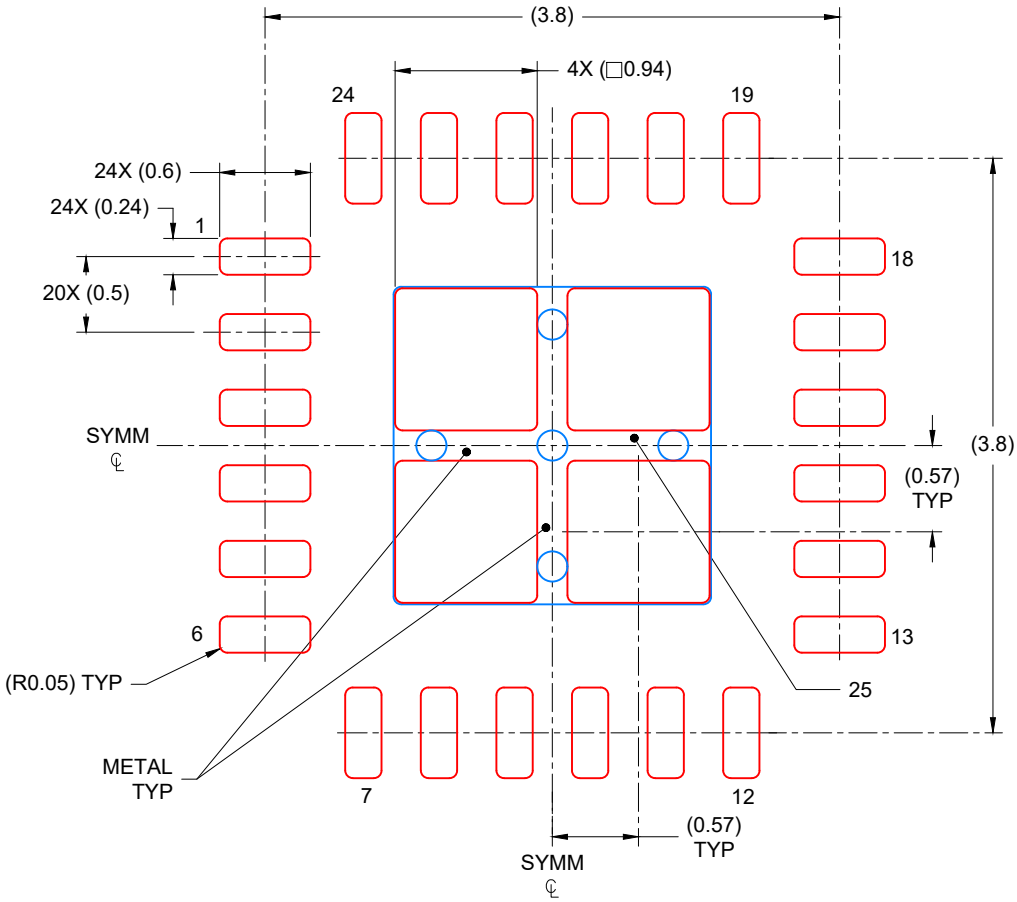

SOLDER PASTE EXAMPLE
BASED ON 0.125 mm THICK STENCIL

EXPOSED PAD
80% PRINTED COVERAGE BY AREA
SCALE: 20X

4224376 / C 06/2021

NOTES: (continued)

6. Laser cutting apertures with trapezoidal walls and rounded corners may offer better paste release. IPC-7525 may have alternate design recommendations..

重要声明和免责声明

TI 提供技术和可靠性数据（包括数据表）、设计资源（包括参考设计）、应用或其他设计建议、网络工具、安全信息和其他资源，不保证没有瑕疵且不做出任何明示或暗示的担保，包括但不限于对适销性、某特定用途方面的适用性或不侵犯任何第三方知识产权的暗示担保。

这些资源可供使用 TI 产品进行设计的熟练开发人员使用。您将自行承担以下全部责任：(1) 针对您的应用选择合适的 TI 产品，(2) 设计、验证并测试您的应用，(3) 确保您的应用满足相应标准以及任何其他安全、安保或其他要求。这些资源如有变更，恕不另行通知。TI 授权您仅可将这些资源用于研发本资源所述的 TI 产品的应用。严禁对这些资源进行其他复制或展示。您无权使用任何其他 TI 知识产权或任何第三方知识产权。您应全额赔偿因在这些资源的使用中对 TI 及其代表造成的任何索赔、损害、成本、损失和债务，TI 对此概不负责。

TI 提供的产品受 TI 的销售条款 (https:www.ti.com.cn/zh-cn/legal/termsofsale.html) 或 ti.com.cn 上其他适用条款/TI 产品随附的其他适用条款的约束。TI 提供这些资源并不会扩展或以其他方式更改 TI 针对 TI 产品发布的适用的担保或担保免责声明。

邮寄地址：上海市浦东新区世纪大道 1568 号中建大厦 32 楼，邮政编码：200122
Copyright © 2021 德州仪器半导体技术（上海）有限公司