TUSB1142 USB Type-C™ 10 Gbps USB 3.2 2:1/1:2 多路复用器/多路信号分离器的自适应线性转接驱动器

1 特性

- USB Type-C 2:1 转接驱动器多路复用器
- USB 3.2 5 Gbps 和 10 Gbps 支持
- 高级 USB 电源管理
  - 有源：550 mW（典型值）
  - 断开：1.5 mW
  - 已禁用 (EN = L)：0.130 mW
- 16 种 EQ 设置在 5 GHz 下高达 12 dB
- 为面向 USB 连接器的端口选择自适应或固定接收器均衡
- 为面向系统的端口选择线性或限幅转接驱动器（SSRX 变送器）
- 低于 1V V_{TX-CM} 和 V_{RX-CM}
- 通过 I^2C 或引脚搭接进行配置
- 在 1.8V 或 3.3V I^2C 电平之间进行选择
- 由 3.3V 单电源供电运行

2 应用

- 笔记本电脑和台式机
- 扩展坞
- 数据存储
- 联网外设和打印机

说明

TUSB1142 是一款具有 1:2 多路信号分离器或 2:1 多路复用器功能的 10 Gbps USB 3.2 线性转接驱动器，适用于 USB-C™ 应用。TUSB1142 用于驻留在主机和 USB-C 插座之间或 USB 器件和 USB-C 插座之间。TUSB1142 支持第 2 代 USB 3.2 (10 Gbps) 和第 1 代 USB 3.2 (5 Gbps) 以及 USB 3.2 低功耗状态（断开、U1、U2 和 U3）。

TUSB1142 具有创新的自适应接收器均衡 (AEQ) 功能。AEQ 功能将自动确定其认为的 TUSB1142 和插入 USB 连接器的 USB 器件之间的最优 ISI 补偿设置，从而提高互操作性。

TUSB1142 由 3.3V 单电源供电运行，并采用 40 引脚 WQFN 封装。

器件信息(1)

器件型号	封装	封装尺寸（标称值）
TUSB1142	WQFN (40)	4.00mm × 6.00mm

(1) 如需了解所有可用封装，请参阅数据表末尾的可订购产品附录。

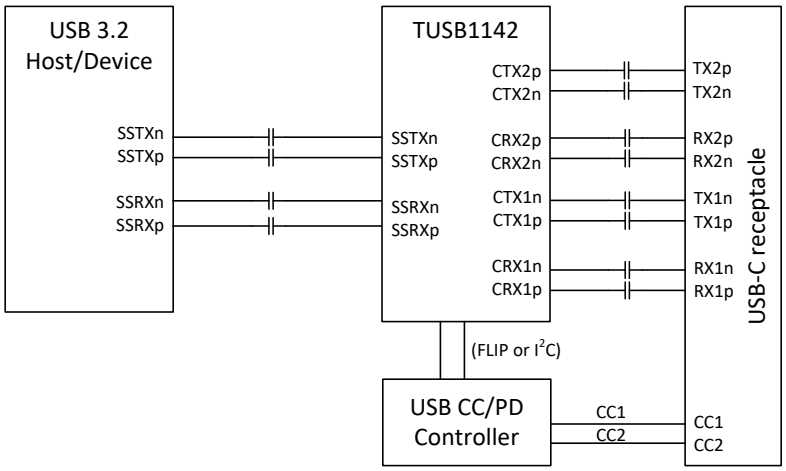

简化版原理图

本文档旨在为方便起见，提供有关 TI 产品中文版本的信息，以确认产品的概要。有关适用的官方英文版本的最新信息，请访问 www.ti.com，其内容始终优先。TI 不保证翻译的准确性和有效性。在实际设计之前，请务必参考最新版本的英文版本。

Table of Contents

1 特性.... 1
2 应用.... 1
3 Revision History.... 2
4 Pin Configuration and Functions.... 3
5 Specifications.... 6
5.1 Absolute Maximum Ratings.... 6
5.2 ESD Ratings.... 6
5.3 Recommended Operating Conditions.... 6
5.4 Thermal Information.... 6
5.5 Power Supply Characteristics.... 7
5.6 Control I/O DC Electrical Characteristics.... 7
5.7 USB Electrical Characteristics.... 9
5.8 Timing Requirements.... 11
5.9 Switching Characteristics.... 11
5.10 Typical Characteristics.... 13
6 Parameter Measurement Information.... 15
7 Detailed Description.... 18
7.1 Overview.... 18
7.2 Functional Block Diagram.... 19
7.3 Feature Description.... 20
7.4 Device Functional Modes.... 24
7.5 Programming.... 26
7.6 Register Map.... 32
8 Application and Implementation.... 41
8.1 Application Information.... 41
9 Typical Application.... 41
10 Design Requirements.... 42
11 Detailed Design Procedure.... 42
11.1 USB SSTX Receiver Configuration.... 44
11.2 USB CRX1/2 Receiver Configuration.... 44
12 Application Curves.... 45
13 Power Supply Recommendations.... 45
14 Layout.... 45
14.1 Layout Guidelines.... 45
14.2 Layout Example.... 46
15 Device and Documentation Support.... 47
15.1 接收文档更新通知.... 47
15.2 支持资源.... 47
15.3 Trademarks.... 47
15.4 Electrostatic Discharge Caution.... 47
15.5 术语表.... 47
16 Mechanical, Packaging, and Orderable Information.... 47

3 Revision History

DATE	REVISION	NOTES
April 2022	*	Initial Release

Copyright © 2022 Texas Instruments Incorporated

4 Pin Configuration and Functions

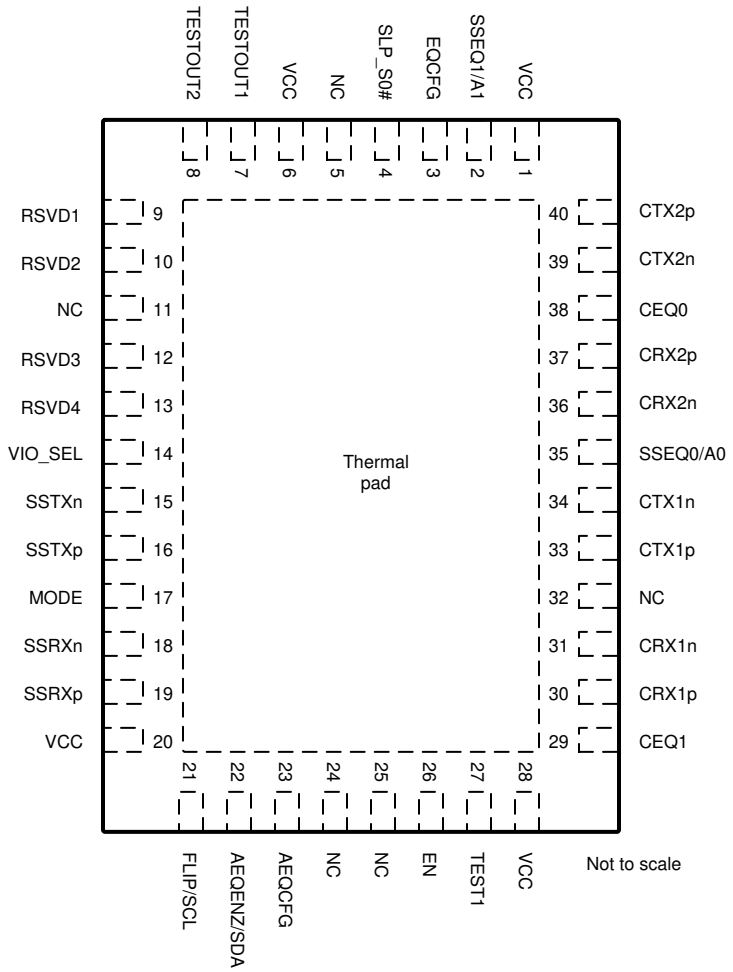

图 4-1. TUSB1142 RNQ Package, 40-Pin WQFN (Top View)

表 4-1. Pin Functions

PIN		TYPE(1)	DESCRIPTION
NAME	NO.		
VCC	1	P	3.3 V supply
SSEQ1/A1	2	4-level I (PU/PD)	In I²C mode, this pin along with A0 pin selects the 7-bit I2C target address (refer to 表 7-8). In pin-strap mode, this pin along with SSEQ0 selects the receiver EQ for SSTX and/or SSTX (refer to 表 7-3).
EQCFG	3	4-level I (PU/PD)	In pin-strap mode, this controls how CEQ[1:0] pins and SSEQ[1:0] are used. Refer to 节 7.4.2 for details. In I²C mode, this pin is for TI internal test and must be left floating for normal operation.
SLP_S0#	4	I (PU)	SLP_S0#. This pin will control whether or not Rx.Detect function is enabled. If this pin is low and device is in Disconnect state, Rx termination will be disabled. If this pin is low and device is U2/U3 state, Rx termination will be enabled. 1: Rx.Detect Enabled. 0: Rx.Detect Disabled.
NC	5		No internal connection.
VCC	6	P	3.3 V supply
TESTOUT1	7	O	For internal TI test only. For normal operation this pin should be left unconnected.
TESTOUT2	8	O	For internal TI test only. For normal operation this pin should be left unconnected.

表 4-1. Pin Functions (continued)

PIN		TYPE(1)	DESCRIPTION
NAME	NO.		
RSVD1	9	I	Reserved. Leave pin unconnected
RSVD2	10	I	Reserved. Leave pin unconnected
NC	11		No internal connection.
RSVD3	12	O	Reserved. Leave pin unconnected
RSVD4	13	O	Reserved. Leave pin unconnected.
VIO_SEL	14	4-level I (PU/PD)	Selects the input thresholds for I2C (SDA and SCL). "0": I2C 3.3 V "R": I2C 1.8 V "F": I2C 3.3 V. "1": I2C 1.8 V.
SSTXn	15	I	Differential negative input for USB port. Should be connected to USB 3.2 Host transmit port through an external 220 nF AC-coupling capacitor.
SSTXp	16	I	Differential positive input for USB port. Should be connected to USB 3.2 Host transmit port through an external 220 nF AC-coupling capacitor.
MODE	17	4-level I (PU/PD)	This pin selects whether device is in I^2C mode or pin-strap mode. Refer to 表 7-5 for details.
SSRXn	18	O	Differential negative output for USB port. Should be connected to USB 3.2 Host receiver port through an external 220 nF AC-coupling capacitor.
SSRXp	19	O	Differential positive output for USB port. Should be connected to USB 3.2 Host receiver port through an external 220 nF AC-coupling capacitor.
VCC	20	P	3.3 V supply
FLIP/SCL	21	I	In I^2C mode, this pin functions as I2C clock. In pin-strap In pin-strap mode, this pin controls the orientation of the MUX (Refer to 表 7-4).
AEQENZ/SDA	22	I/O	In I^2C mode, this pin functions as I2C data. In pin-strap mode, this pin controls whether or not AEQ is enabled. 0: AEQ enabled 1: AEQ disabled
AEQCFG	23	4-level I (PU/PD)	In pin-strap mode, this pin controls the FULLAEQ_UPPER_EQ limit. In I^2C mode, this function is controlled by the FULLAEQ_UPPER_EQ register. "0": FULLAEQ_UPPER_EQ = Ah "R": FULLAEQ_UPPER_EQ = Fh "F": FULLAEQ_UPPER_EQ = 8h "1": FULLAEQ_UPPER_EQ = Ch
NC	24		No internal connection
NC	25		No internal connection
EN	26	I (PU)	When low, the differential receiver's termination will be disabled and differential drivers will be disabled. On rising edge of EN, device will sample four-level inputs and function based on the sampled state of the pins. This pin has a internal 500k pull-up to VCC. Please note this pin will also reset internal configuration registers.
TEST1	27	I	TI Test1. Under normal operations, this pin shall be connected directly or pull-down to GND.
VCC	28	P	3.3 V supply
CEQ1	29	4-level I (PU/PD)	In pin-strap mode, this pin along with CEQ0 selects the receiver EQ for CRX1 and/or CRX2 (Refer to 表 7-2).
CRX1p	30	I	Differential positive input for USB port 1. Should be connected to RX1p pin of USB connector. Connection can be DC-coupled to USB connector. Optionally, connection can be through an external 330 nF AC-coupling capacitor.
CRX1n	31	I	Differential negative input for USB port 1. Should be connected to RX1n pin of USB connector. Connection can be DC-coupled to USB connector. Optionally, connection can be through an external 330 nF AC-coupling capacitor.
NC	32		No internal connection.

Copyright © 2022 Texas Instruments Incorporated

表 4-1. Pin Functions (continued)

PIN		TYPE(1)	DESCRIPTION
NAME	NO.		
CTX1p	33	O	Differential positive output for USB port 1. Should be connected to TX1p pin of USB connector through an external 220 nF AC-coupling capacitor.
CTX1n	34	O	Differential negative output for USB port 1. Should be connected to TX1n pin of USB connector through an external 220 nF AC-coupling capacitor.
SSEQ0/A0	35	4-level I (PU/PD)	In I^2C mode, this pin along with A1 pin selects the 7-bit I2C target address (refer to 表 7-8). In pin-strap mode, this pin along with SSEQ1 selects the receiver EQ for SSTX and/or SSTX (refer to 表 7-3).
CRX2n	36	I	Differential negative input for USB port 2. Should be connected to RX2n pin of USB connector. Connection can be DC-coupled to USB connector. Optionally, connection can be through an external 330 nF AC-coupling capacitor.
CRX2p	37	I	Differential positive input for USB port 2. Should be connected to RX2p pin of USB connector. Connection can be DC-coupled to USB connector. Optionally, connection can be through an external 330 nF AC-coupling capacitor.
CEQ0	38	4-level I (PU/PD)	In pin-strap mode, this pin along with CEQ1 selects the receiver EQ for CRX1 and/or CRX2 (Refer to 表 7-2).
CTX2n	39	O	Differential negative output for USB port 2. Should be connected to TX2n pin of USB connector through an external 220 nF AC-coupling capacitor.
CTX2p	40	O	Differential positive output for USB port 2. Should be connected to TX2p pin of USB connector through an external 220 nF AC-coupling capacitor.
Thermal Pad		G	Thermal pad. Connect to a solid ground plane.

(1) I = Input, O = Output, I/O = Input or Output, G = Ground, P = Power, PD = Internal Pull-down, PU = Internal Pull-up.

Copyright © 2022 Texas Instruments Incorporated

5 Specifications

5.1 Absolute Maximum Ratings

over operating free-air temperature range (unless otherwise noted)[1]

		MIN	MAX	UNIT
Supply Voltage Range	V_{CC}	– 0.3	4	V
Voltage Range at any input or output pin	Differential voltage between positive and negative inputs	-2.5	2.5	V
	Voltage at differential inputs	– 0.5	4	V
	CMOS Inputs	– 0.5	4	V
Maximum junction temperature, T_J	TUSB1142		105	°C
	TUSB1142I		125	°C
Storage temperature, T_{stg}		– 65	150	°C

(1) Operation outside the *Absolute Maximum Ratings* may cause permanent device damage. Absolute maximum ratings do not imply functional operation of the device at these or any other conditions beyond those listed under *Recommended Operating Conditions*. If briefly operating outside the *Recommended Operating Conditions* but within the *Absolute Maximum Ratings*, the device may not sustain damage, but it may not be fully functional. Operating the device in this manner may affect device reliability, functionality, performance, and shorten the device lifetime.

5.2 ESD Ratings

			VALUE	UNIT
$V_{(ESD)}$	Electrostatic discharge	Human-body model (HBM), per ANSI/ESDA/JEDEC JS-001[1]	±2000	V
		Charged-device model (CDM), per ANSI/ESDA/JEDEC JS-002[2]	±1500	

(1) JEDEC document JEP155 states that 500-V HBM allows safemanufacturing with a standard ESD control process.
(2) JEDEC document JEP157 states that 250-V CDM allows safemanufacturing with a standard ESD control process.

5.3 Recommended Operating Conditions

over operating free-air temperature range (unless otherwise noted)

		MIN	NOM	MAX	UNIT
V_{CC}	Main power supply	3.0	3.3	3.6	V
	Main supply ramp requirement	0.1		50	ms
$V_{(I2C)}$	Supply that external resistors are pulled up to for both SDA and SCL pins	1.7		3.6	V
$V_{(PSN)}$	Supply Noise on V_{CC} pins (less than 4MHz)			50	mVpp
T_A	TUSB1142 Operating free-air temperature	0		70	°C
	TUSB1142I Operating free-air temperature	-40		85	°C

5.4 Thermal Information

THERMAL METRIC[1]		TUSB1142 RNQ (WQFN) 40 PINS	UNIT
$R_{\theta JA}$	Junction-to-ambient thermal resistance	31.4	°C/W
$R_{\theta JC(top)}$	Junction-to-case (top) thermal resistance	21.8	°C/W
$R_{\theta JB}$	Junction-to-board thermal resistance	12.2	°C/W
ψ_{JT}	Junction-to-top characterization parameter	0.3	°C/W
ψ_{JB}	Junction-to-board characterization parameter	12.2	°C/W
$R_{\theta JC(bot)}$	Junction-to-case (bottom) thermal resistance	4.3	°C/W

(1) For more information about traditional and new thermalmetrics, see the *Semiconductor and ICPackage Thermal Metrics* application report.

Copyright © 2022 Texas Instruments Incorporated

5.5 Power Supply Characteristics

over operating free-air temperature range (unless otherwise noted)

PARAMETER		TEST CONDITIONS	MIN	TYP	MAX	UNIT
$P_{ACTIVE-USB-1Port}$	Average active power USB Only for single port.	Link in U0 with GEN2 data transmission; EQ control pins = NC; PRBS7 pattern at 10 Gbps, V_{ID} = 1000 mV_{PP} ; LINR_L3; EN = H;		275		mW
$P_{NC-USB-SLP\#}$	Average power with no connection with SLP_S0#	No USB3.2 GEN2 device is connected to CTX1; EN = H; SLP_S0#;		0.13		mW
$P_{NC-USB-1Port}$	Average power with no connection	No USB3.2 GEN2 device is connected to CTX1; EN = H;		1.5		mW
$P_{U2U3-SLP\#}$	Average power in U2/U3 with SLP_S0#	Link in U2 or U3; EN = H; SLP_S0# = L;		0.24		mW
$P_{U2U3-1Port}$	Average power in U2/U3	Link in U2 or U3; EN = H;		1.9		mW
$P_{DISABLED-I2C}$	Device Disabled power in I^2C mode	MODE = "F"; EN = H; CTLSEL = 0h;		0.108		mW
$P_{DISABLED}$	Device Disabled power in pin-strap	MODE != "F"; EN = L;		0.130		mW

5.6 Control I/O DC Electrical Characteristics

over operating free-air temperature range (unless otherwise noted)

PARAMETER		TEST CONDITIONS	MIN	TYP	MAX	UNIT
4-level Inputs						
4-Level V_{TH}	Threshold 0 / R	V_{CC} = 3.3 V		0.55		V
4-Level V_{TH}	Threshold R/ Float	V_{CC} = 3.3 V		1.65		V
4-Level V_{TH}	Threshold Float / 1	V_{CC33} = 3.3 V		2.7		V
I_{IH}	High level input current with internal resistors disabled.	V_{CC} = 3.6 V; V_{IN} = 3.6 V	-5		5	µA
I_{IL}	Low level input current with internal resistors disabled	V_{CC} = 3.6 V; V_{IN} = 0 V	-1		1	µA
I_{IH-REN}	High level input current with internal resistors enabled.	V_{CC} = 3.6 V; V_{IN} = 3.6 V	20		60	µA
I_{IL-REN}	Low level input current with internal resistors enabled.	V_{CC} = 3.6 V; V_{IN} = 0 V	–100		-40	µA
R_{PU}	Internal pull-up resistance			48		kΩ
R_{PD}	Internal pull-down resistance			98		kΩ
2-State CMOS Input (EN, SLP_S0#)						
V_{IH}	High-level input voltage		1.2		3.6	V
V_{IL}	Low-level input voltage		-0.3		0.6	V
R_{PU}	Internal pull-up resistance (EN, SLP_S0#)		250	400	550	kΩ
I_{IH}	High-level input current (EN, SLP_S0#)	V_{IN} = 3.6 V; MODE != "F"; VIO_SEL = "0" or "R";	-5		5	µA
I_{IL}	Low-level input current (EN, SLP_S0#)	V_{IN} = GND, V_{CC} = 3.6 V; MODE != "F"; VIO_SEL = "0" or "R";	–11		11	µA
I^2C Control Pins (SCL, SDA)						
V_{IH_1p8V}	High-level input voltage when configured for 1.8V I2C level	MODE = "F"; VIO_SEL = "R" or "1";	1.2		3.6	V
V_{IL_1p8V}	Low-level input voltage when configured for 1.8V I2C level	MODE = "F"; VIO_SEL = "R" or "1";	-0.3		0.6	V
V_{IH_3p3V}	High-level input voltage when configured for 3.3V I2C level	MODE = "F"; VIO_SEL = "0" or "F";	2.0		3.6	V
V_{IL_3p3V}	Low-level input voltage when configured for 3.3V I2C level	MODE = "F"; VIO_SEL = "0" or "F";	-0.3		0.8	V
V_{OL}	Low-level output voltage	MODE = "F"; I_{OL} = 6 mA	0		0.4	V
I_{OL}	Low-level output current	MODE = "F"; V_{OL} = 0.4 V	20			mA
$I_{I(I2C)}$	Input current	0.1 x $V_{(I2C)}$ < Input voltage < 3.3 V	–1		1	µA
$C_{I(I2C)}$	Input capacitance				10	pF

5.6 Control I/O DC Electrical Characteristics (continued)

over operating free-air temperature range (unless otherwise noted)

PARAMETER		TEST CONDITIONS	MIN	TYP	MAX	UNIT
$C_{(I2C_FM+_BUS)}$	I2C bus capacitance for FM+ (1MHz)				150	pF
$C_{(I2C_FM_BUS)}$	I2C bus capacitance for FM (400kHz)				150	pF
$R_{(EXT_I2C_FM+)}$	External resistors on both SDA and SCL when operating at FM+ (1MHz)	$C_{(I2C_FM+_BUS)}$ = 150 pF	620	820	910	Ω
$R_{(EXT_I2C_FM)}$	External resistors on both SDA and SCL when operating at FM (400kHz)	$C_{(I2C_FM_BUS)}$ = 150 pF	620	1500	2200	Ω

Copyright © 2022 Texas Instruments Incorporated

5.7 USB Electrical Characteristics

over operating free-air temperature and voltage range (unless otherwise noted)

PARAMETER		TEST CONDITIONS	MIN	TYP	MAX	UNIT
USB Gen 2 Differential Receiver (CRX1p/n, CRX2p/n, SSTX)						
$V_{(RX-DIFF-PP)}$	Input differential peak-peak voltage swing linear dynamic range	AC-coupled differential peak-to-peak signal measured post CTLE through a reference channel		1200		mVpp
$V_{(RX-DC-CM)}$	Common-mode voltage bias in the receiver (DC)			0		V
$V_{RX_CM-INST}$	Max Instantaneous RX DC common mode voltage change under all operating conditions (OFF to ON, Disabled to USB, etc…)	Measured at non-device side of AC coupling capacitor with 200-kΩ load.	-300		500	mV
$R_{(RX-DIFF-DC)}$	Differential input impedance (DC)	Present after a GEN2 device is detected.	72	90	120	Ω
$R_{(RX-CM-DC)}$	Receiver DC common mode impedance	Present after a GEN2 device is detected.	18		30	Ω
$Z_{(RX-HIGH-IMP-DC-POS)}$	Common-mode input impedance with termination disabled (DC)	Present when no GEN2 device is detected on transmitter. Measured over the range of 0 – 500 mV with respect to GND.	25			kΩ
$V_{(SIGNAL-DET-DIFF-PP)}$	Input differential peak-to-peak signal detect assert level	At 10 Gbps, no input loss, PRBS7 pattern		75		mV
$V_{(RX-IDLE-DET-DIFF-PP)}$	Input differential peak-to-peak signal detect de-assert Level	At 10 Gbps, no input loss, PRBS7 pattern		55		mV
$V_{(RX-LFPS-DET-DIFF-PP)}$	Low frequency periodic signaling (LFPS) detect threshold	Below the minimum is squelched	100		300	mV
$V_{(RX-CM-AC-P)}$	Peak RX AC common-mode voltage	Measured at package pin			150	mV
$C_{(RX)}$	RX input capacitance to GND	At 5 GHz;			1	pF
$R_{L(RX-DIFF)}$	Differential return Loss	50 MHz – 1.25 GHz at 85 Ω;		-22		dB
		5 GHz at 85 Ω;		-20		dB
$R_{L(RX-CM)}$	Common-mode return loss	50 MHz – 5 GHz at 85 Ω;		-12		dB
E_{Q_SSTX15}	SSTX->CTX1 Receiver equalization at 5 GHz	SSEQ1_SEL = 15; Gain at 5 GHz minus Gain at 10 MHz;		13.6		dB
E_{Q_RX15}	CRX1 -> SSRX Receiver equalization at 5 GHz	CEQ1_SEL = 15; Gain at 5 GHz minus Gain at 10 MHz;		12.7		dB
$C_{AC-USB1}$	Required external AC capacitor on SSTX		75		265	nF
$C_{AC-USB2}$	Optional external AC capacitor on CRX1 and CRX2.		297		363	nF
USB Gen 2 Differential Transmitter (CTX1p/n, CTX2p/n, SSRX)						
$V_{TX(DIFF-PP)}$	Transmitter dynamic differential voltage swing range.	EQ15; VID = 1Vpp; LINR_L3		1200		mVpp
$V_{TX(RCV-DETECT)}$	Amount of voltage change allowed during receiver detection				600	mV
$V_{TX-CM-INST-ONOFF}$	Max Instantaneous TX DC common mode voltage change under operating condition: OFF to ON, ON to OFF, during Rx.Detect; Disconnect to U0, U2/U3 to Disconnect.	Measured single-ended at non-device side of AC coupling capacitor with 200-kΩ load.	-500		800	mV
$V_{TX(CM-IDLE-DELTA)}$	Transmitter idle common-mode voltage change while in U2/U3 and not actively transmitting LFPS		–300		600	mV
$V_{TX(DC-CM)}$	Common-mode voltage bias in the transmitter (DC)		0.5	0.76	1	V
$V_{TX(CM-AC-PP-ACTIVE)}$	Tx AC common-mode voltage active	Max mismatch from Txp + Txn for both time and amplitude			100	mVpp
$V_{TX(IDLE-DIFF-AC-PP)}$	AC electrical idle differential peak-to-peak output voltage	At package pins	0		10	mV
$V_{TX(CM-DC-ACTIVE-IDLE-DELTA)}$	Absolute DC common-mode voltage between U1 and U0	At package pin			200	mV
$R_{TX(DIFF)}$	Differential impedance of the driver		80	90	120	Ω

5.7 USB Electrical Characteristics (continued)

over operating free-air temperature and voltage range (unless otherwise noted)

PARAMETER		TEST CONDITIONS	MIN	TYP	MAX	UNIT
$R_{TX(CM)}$	Common-mode impedance of the driver	Measured with respect to AC ground over 0 – 500 mV	18		30	Ω
$V_{SSRX-LIMITED-VODL0}$	SSRX differential peak-to-peak voltage when configured for limited redriver and LINR_L0	TX_PRESHOOT_EN = 0; TX_DEEMPHASIS_EN = 0;		750		mVpp
$V_{SSRX-LIMITED-VODL1}$	SSRX differential peak-to-peak voltage when configured for limited redriver and LINR_L1	TX_PRESHOOT_EN = 0; TX_DEEMPHASIS_EN = 0;		900		mVpp
$V_{SSRX-LIMITED-VODL2}$	SSRX differential peak-to-peak voltage when configured for limited redriver and LINR_L2	TX_PRESHOOT_EN = 0; TX_DEEMPHASIS_EN = 0;		1000		mVpp
$V_{SSRX-LIMITED-VODL3}$	SSRX differential peak-to-peak voltage when configured for limited redriver and LINR_L3	TX_PRESHOOT_EN = 0; TX_DEEMPHASIS_EN = 0;		1100		mVpp
$V_{SSRX-DE-RATIO0}$	SSRX de-emphasis when configured for limited redriver and de-emphasis enabled.	TX_PRESHOOT_EN = 0; TX_DEEMPHASIS_EN = 1; TX_DEEPHASIS = 2'b00; USB_SSRX_VOD = 2'b00 (LINR_L3); Refer to 图 6-7		-1.8		dB
$V_{SSRX-DE-RATIO1}$	SSRX de-emphasis when configured for limited redriver and de-emphasis enabled.	TX_PRESHOOT_EN = 0; TX_DEEMPHASIS_EN = 1; TX_DEEPHASIS = 2'b01; USB_SSRX_VOD = 2'b00 (LINR_L3); Refer to 图 6-7		-2.1		dB
$V_{SSRX-DE-RATIO2}$	SSRX de-emphasis when configured for limited redriver and de-emphasis enabled.	TX_PRESHOOT_EN = 0; TX_DEEMPHASIS_EN = 1; TX_DEEPHASIS = 2'b10; USB_SSRX_VOD = 2'b00 (LINR_L3); Refer to 图 6-7		-3.2		dB
$V_{SSRX-DE-RATIO3}$	SSRX de-emphasis when configured for limited redriver and de-emphasis enabled.	TX_PRESHOOT_EN = 0; TX_DEEMPHASIS_EN = 1; TX_DEEPHASIS = 2'b11; USB_SSRX_VOD = 2'b00 (LINR_L3); Refer to 图 6-7		-3.8		dB
$V_{SSRX-PRESH-RATIO0}$	SSRX pre-shoot level when configured for limited redriver and pre-shoot enabled.	TX_PRESHOOT_EN = 1; TX_DEEMPHASIS_EN = 0; TX_PRESHOOT = 2'b00; USB_SSRX_VOD = 2'b00 (LINR_L3); Refer to 图 6-6		1.6		dB
$V_{SSRX-PRESH-RATIO1}$	SSRX pre-shoot level when configured for limited redriver and pre-shoot enabled.	TX_PRESHOOT_EN = 1; TX_DEEMPHASIS_EN = 0; TX_PRESHOOT = 2'b01; USB_SSRX_VOD = 2'b00 (LINR_L3); Refer to 图 6-6		2.1		dB
$V_{SSRX-PRESH-RATIO2}$	SSRX pre-shoot level when configured for limited redriver and pre-shoot enabled.	TX_PRESHOOT_EN = 1; TX_DEEMPHASIS_EN = 0; TX_PRESHOOT = 2'b10; USB_SSRX_VOD = 2'b00 (LINR_L3); Refer to 图 6-6		2.5		dB
$V_{SSRX-PRESH-RATIO3}$	SSRX pre-shoot level when configured for limited redriver and pre-shoot enabled.	TX_PRESHOOT_EN = 1; TX_DEEMPHASIS_EN = 0; TX_PRESHOOT = 2'b11; USB_SSRX_VOD = 2'b00 (LINR_L3); Refer to 图 6-6		3.0		dB
$I_{TX(SHORT)}$	TX short circuit current	TX± shorted to GND			60	mA
$C_{TX(PARASITIC)}$	TX input capacitance for return loss	At package pins, at 5 GHz			1.25	pF
$R_{LTX(DIFF)}$	Differential return loss	50 MHz – 1.25 GHz at 85 Ω		-28		dB
$R_{LTX(CM)}$	Common-mode return loss	50 MHz – 5 GHz at 85 Ω		-12		dB
$C_{TX-AC(COUPLING)}$	External required AC coupling capacitor		75		265	nF
AC Characteristics						
Crosstalk_CRXTX	Differential crosstalk between CTX1/2 and CRX1/2 signal pairs	85 Ω; At 5 GHz; SSEQ[1:0] = 0; CEQ[1:0] = 0;			-40	dB

Copyright © 2022 Texas Instruments Incorporated

5.7 USB Electrical Characteristics (continued)

over operating free-air temperature and voltage range (unless otherwise noted)

PARAMETER		TEST CONDITIONS	MIN	TYP	MAX	UNIT
$CP_{LF-LINRL0}$	Low-frequency -1dB compression point at LINR_L0 setting.	20 MHz clock pattern; VID is 200 mV to 1200 mV in 10 mV steps;		750		mVpp
$CP_{HF-LINRL0}$	High-frequency -1dB compression point at LINR_L0 setting.	5 GHz clock pattern; VID is 200mV to 1200mV in 10mV steps;		650		mVpp
$CP_{LF-LINRL1}$	Low-frequency -1dB compression point at LINR_L1 setting.	20 MHz clock pattern; VID is 200 mV to 1200 mV in 10 mV steps;		850		mVpp
$CP_{HF-LINRL1}$	High-frequency -1dB compression point at LINR_L1 setting.	5 GHz clock pattern; VID is 200 mV to 1200 mV in 10 mV steps;		750		mVpp
$CP_{LF-LINRL2}$	Low-frequency -1dB compression point at LINR_L2 setting.	20 MHz clock pattern; VID is 200 mV to 1200 mV in 10 mV steps;		950		mVpp
$CP_{HF-LINRL2}$	High-frequency -1dB compression point at LINR_L2 setting.	5 GHz clock pattern; VID is 200 mV to 1200 mV in 10 mV steps;		850		mVpp
$CP_{LF-LINRL3}$	Low-frequency -1dB compression point at LINR_L3 setting.	20 MHz clock pattern; VID is 200 mV to 1200 mV in 10mV steps;		1050		mVpp
$CP_{HF-LINRL3}$	High-frequency -1dB compression point at LINR_L3 setting.	5 GHz clock pattern; VID is 200 mV to 1200 mV in 10 mV steps;		900		mVpp
f_{LF}	Low frequency cutoff	200 mV_{PP}< V_{ID} < 1200 mV_{PP}		20	50	kHz
$t_{TX_DJ_SSTX1-CTX1}$	TX output deterministic residual jitter SSTX-> CTX.	Optimal EQ setting; 12-in prechannel (SDD21 = -11.2 dB); 1.6-in post channel (SDD21 = -1.8 dB); PRBS7; 10 Gbps		.05		UI

5.8 Timing Requirements

			MIN	NOM	MAX	UNIT
USB3.1						
$t_{IDLEEntry}$	Delay from U0 to electrical idle	Refer to 图 6-4.			10	ns
$t_{IDELExit_U1}$	U1 exit time: break in electrical idle to the transmission of LFPS	Refer to 图 6-4.			1	ns
$t_{IDLEExit_U2U3}$	U2/U3 exit time: break in electrical idle to transmission of LFPS	Refer to 图 6-4.		10		µs
t_{RXDET_INTVL}	RX detect interval while in Disconnect				12	ms
$t_{IDLEExit_DISC}$	Disconnect Exit Time			10		µs
t_{Exit_SHTDN}	Shutdown Exit Time				0.75	ms
$t_{AEQ_FULL_DONE}$	Maximum time to obtain optimum EQ setting when operating in Full AEQ mode.				400	µs
$t_{AEQ_FAST_DONE}$	Maximum time to determine appropriate EQ setting when operating in Fast AEQ mode.				60	µs
t_{DIFF_DLY}	Differential Propagation Delay	Refer to 图 6-3.			300	ps
t_R, t_F	Output Rise/Fall time	20%-80% of differential voltage measured 1.7 inch from the output pin; Refer to 图 6-5.	30			ps
t_{RF_MM}	Output Rise/Fall time mismatch	20%-80% of differential voltage measured 1.7 inch from the output pin			2.6	ps
Power-up						
t_{EN_LOW}	EN pin held low after supply reaches VCC(min)	Refer to 图 6-1	5			ms
t_{CFG_SU}	CFG(1) high	Refer to 图 6-1	250			µs
t_{CFG_HD}	CFG(1) high	Refer to 图 6-1	500			µs

(1) Following pins comprise CFG pins: MODE, CEQ[1:0], SSEQ[1:0], EQCFG, AEQCFG

5.9 Switching Characteristics

over operating free-air temperature range (unless otherwise noted)

PARAMETER	TEST CONDITIONS	MIN	TYP	MAX	UNIT
I²C					

5.9 Switching Characteristics (continued)

over operating free-air temperature range (unless otherwise noted)

PARAMETER		TEST CONDITIONS	MIN	TYP	MAX	UNIT
f_{SCL}	I^2C clock frequency				1	MHz
t_{BUF}	Bus free time between START and STOP conditions	Refer to 图 6-2	0.5			µs
t_{HD_STA}	Hold time after repeated START condition. After this period, the first clock pulse is generated	Refer to 图 6-2	0.26			µs
t_{LOW}	Low period of the I^2C clock	Refer to 图 6-2	0.5			µs
t_{HIGH}	High period of the I^2C clock	Refer to 图 6-2	0.26			µs
t_{SU_STA}	Setup time for a repeated START condition	Refer to 图 6-2	0.26			µs
t_{HD_DAT}	Data hold time	Refer to 图 6-2	0			µs
t_{SU_DAT}	Data setup time	Refer to 图 6-2	50			ns
t_R	Rise time of both SDA and SCL signals	Refer to 图 6-2			120	ns
t_F	Fall time of both SDA and SCL signals	Refer to 图 6-2	20 × ($V_{(I2C)}$/5.5 V)		120	ns
t_{SU_STO}	Setup time for STOP condition	Refer to 图 6-2	0.26			µs
C_b	Capacitive load for each bus line				150	pF

Copyright © 2022 Texas Instruments Incorporated

5.10 Typical Characteristics

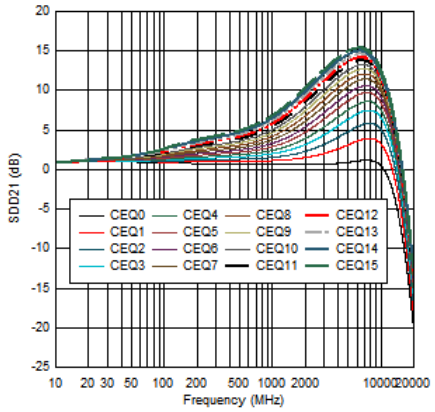

图 5-1. USB CRX1 EQ Settings Curves at 85 Ω (from simulation)

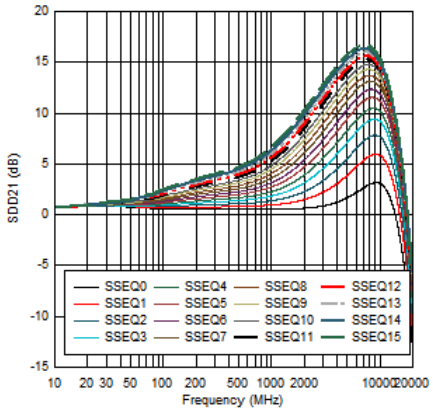

图 5-2. USB SSTX EQ Settings Curves at 85 Ω (from simulation)

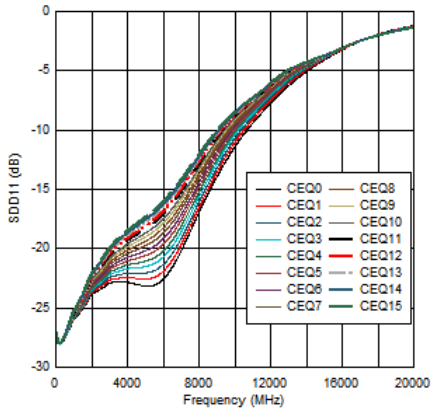

图 5-3. CRX1 Input Return Loss Performance at 85 Ω (from simulation)

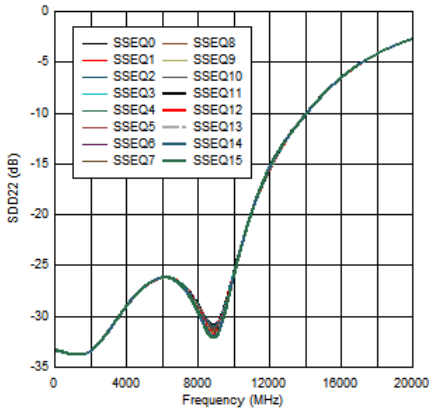

图 5-4. CTX1 Output Return Loss Performance at 85 Ω (from simulation)

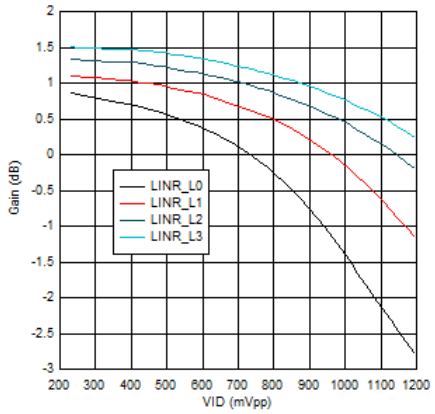

图 5-5. USB SSRX VOD Linearity Settings at 20 MHz and EQ = 0

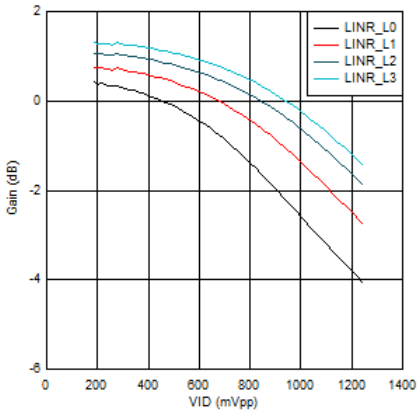

图 5-6. USB SSRX VOD Linearity Settings at 5 GHz and EQ = 0

5.10 Typical Characteristics (continued)

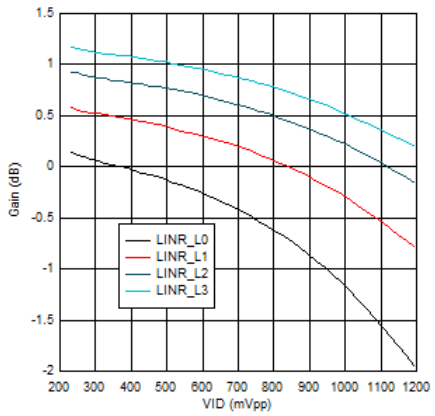

图 5-7. USB CTX1 VOD Linearity Settings at 20 MHz and EQ = 0

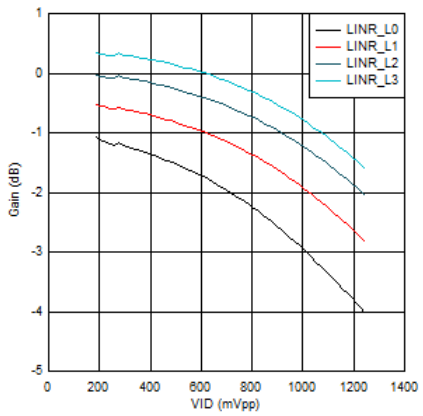

图 5-8. USB CTX1 VOD Linearity Settings at 5 GHz and EQ = 0

Copyright © 2022 Texas Instruments Incorporated

6 Parameter Measurement Information

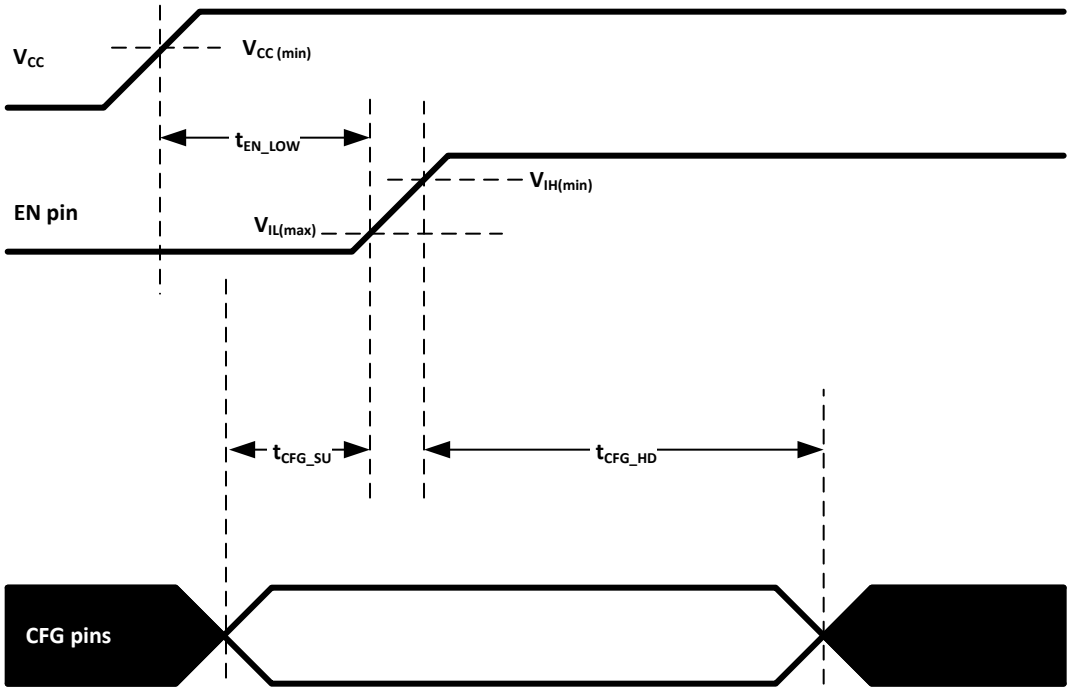

图 6-1. Power-On Timing Requirements

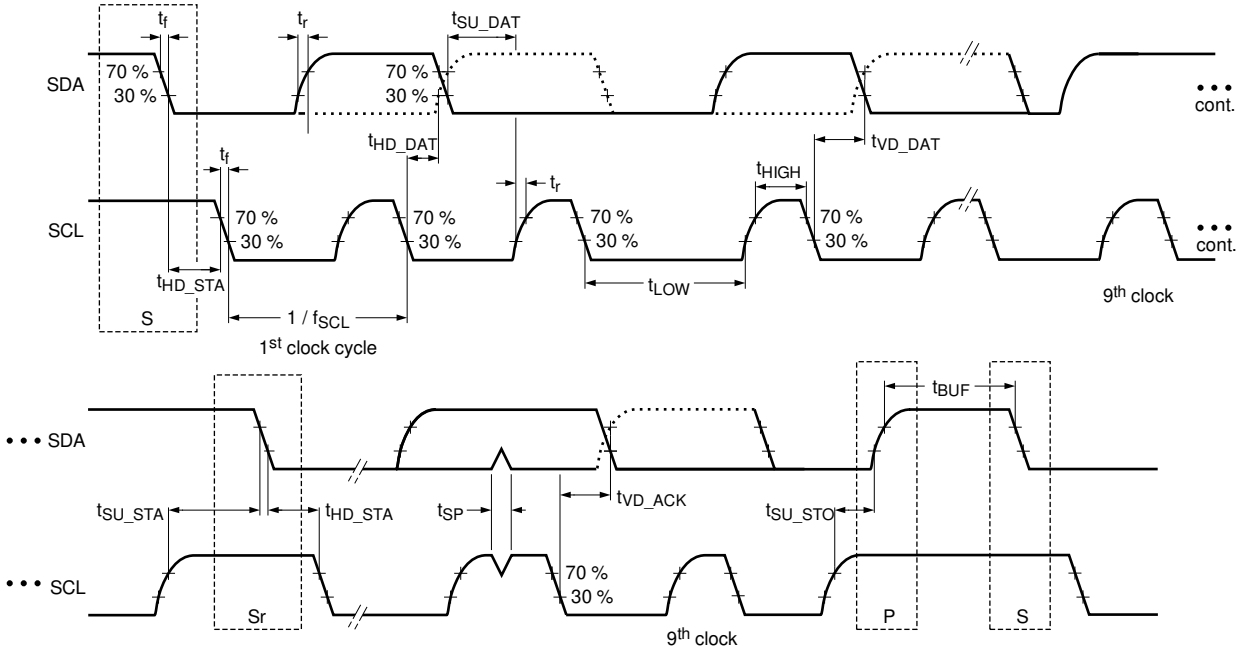

图 6-2. I2C Timing Diagram Definitions

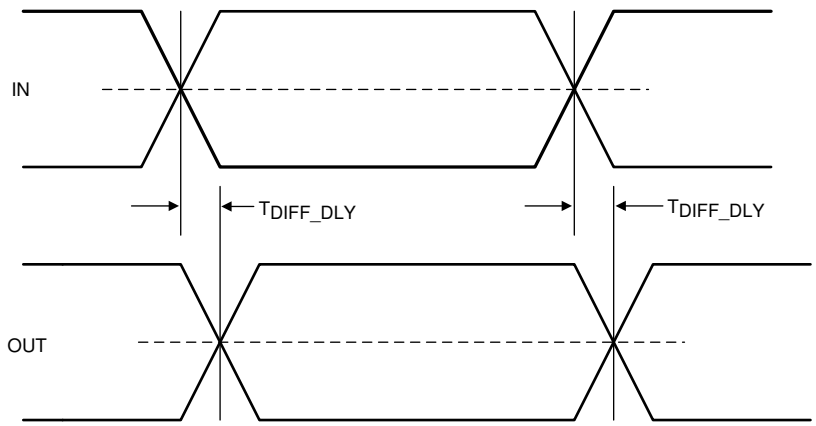

图 6-3. USB Propagation Delay

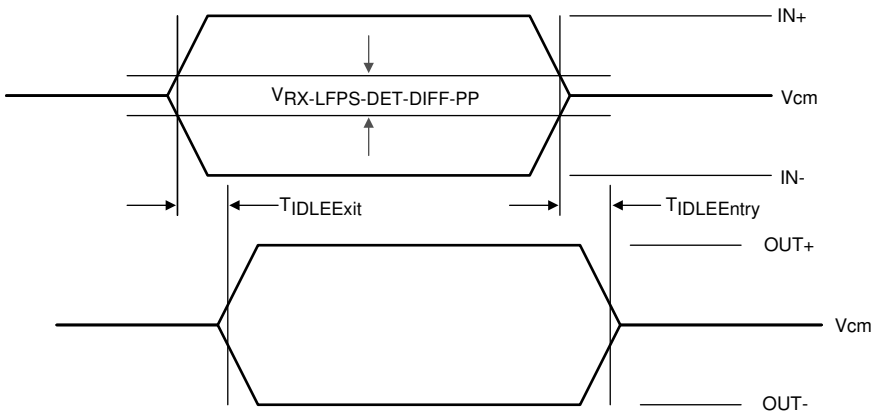

图 6-4. Electrical Idle Exit and Entry Delay

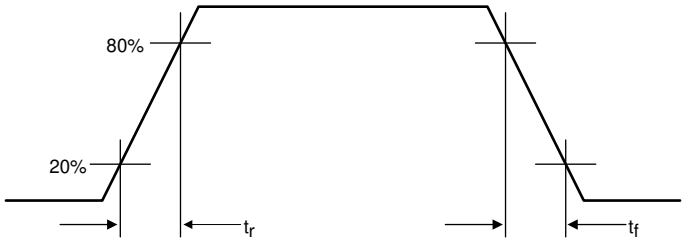

图 6-5. Output Rise and Fall Times

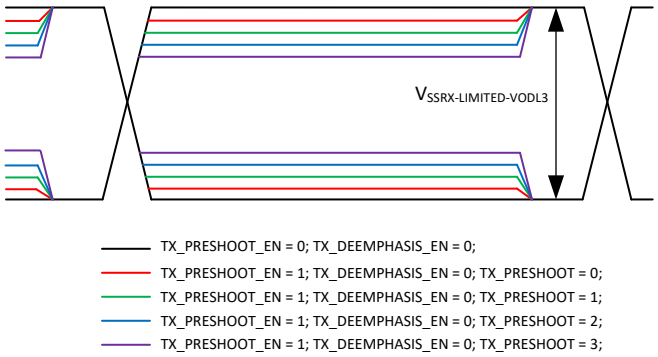

图 6-6. SSRX Limited Pre-Shoot only

Copyright © 2022 Texas Instruments Incorporated

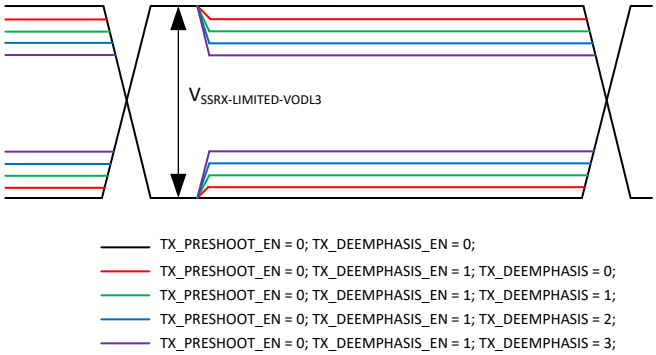

图 6-7. SSRX Limited De-Emphasis Only

7 Detailed Description

7.1 Overview

The TUSB1142 is a 10 Gbps USB 3.2 linear redriver with 1:2 DeMUX or 2:1 Mux function for USB-C applications. The TUSB1142 is intended to reside between a Host and a USB-C receptacle or between a USB device and a USB-C receptacle. The TUSB1142 supports both USB 3.2 Gen2 (10 Gbps) and Gen1 (5 Gbps) as well as USB 3.2 low power states (Disconnect, U1, U2, and U3).

The TUSB1142 supports up to 16 receiver equalization settings controlled by either pin-strap pins or through I2C registers. The USB connector facing receivers (CRX1 and CRX2) support three equalization modes: Fixed EQ, Fast AEQ, and Full AEQ. Selection between these modes is done through either pin-strap pins or through I2C regisrers. The other receivers (SSTX) only support Fixed EQ.

The TUSB1142 operates as a linear redriver for signals traversing from the SSTX receivers towards CTX1/2 transmitters. It can operate as either a linear redriver or limited redriver for signals traversing from CRX1/2 receivers towards SSRX transmitters. TUSB1142 defaults to linear redriver but can be enabled for limited redriver by I2C register. When enabled for limited redriver, the SSRX transmitter support four levels of pre-shoot and four-levels of de-emphasis.

Copyright © 2022 Texas Instruments Incorporated

7.2 Functional Block Diagram

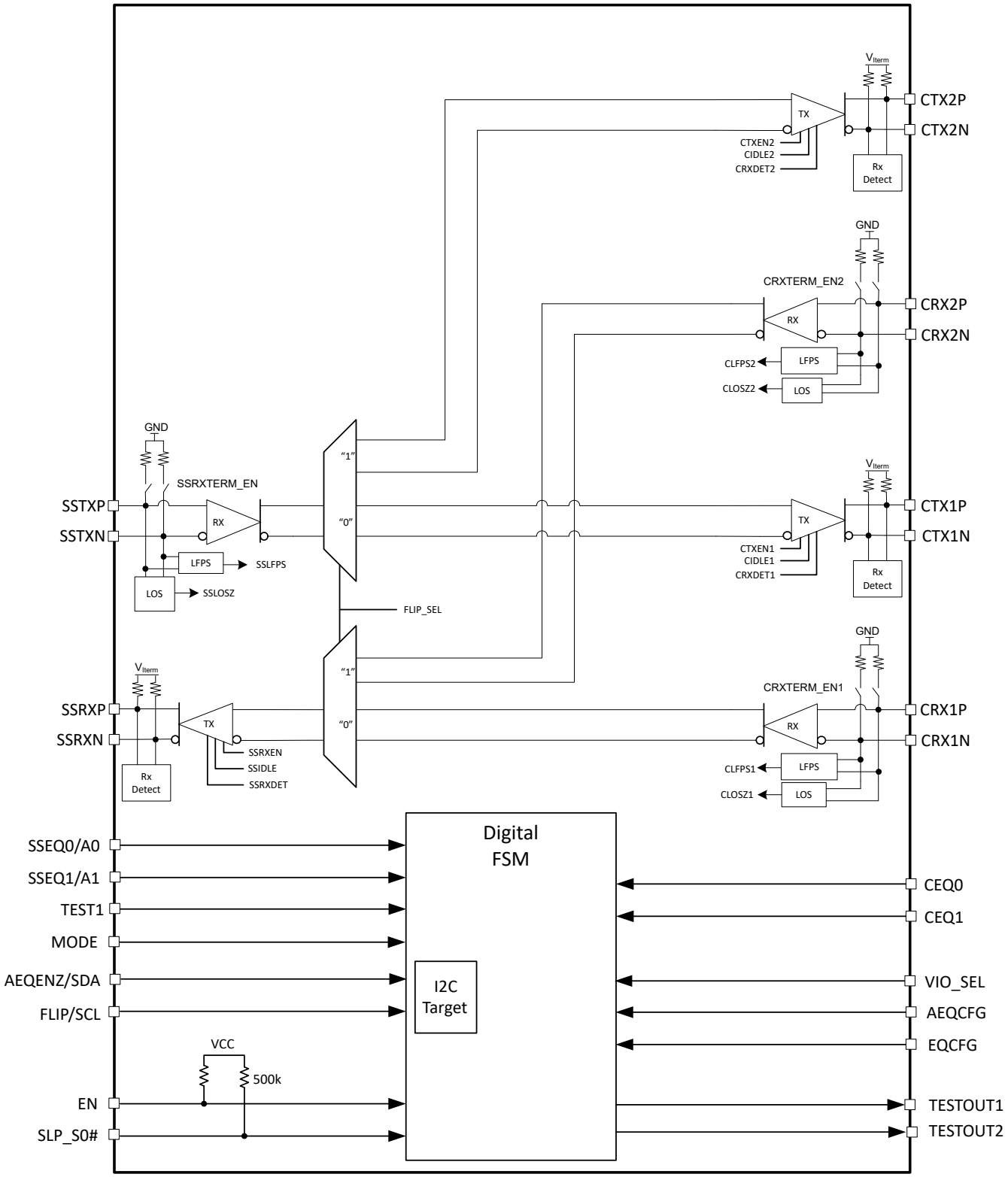

7.3 Feature Description

7.3.1 4-Level Inputs

The TUSB1142 has 4-level inputs pins that are used to control the receiver equalization gain, transmitter voltage swing, and place TUSB1142 into different modes of operation. These 4-level inputs utilize a resistor divider to help set the 4 valid levels and provide a wider range of control settings. There are internal pull-up and pull-down resistors. These resistors, together with the external resistor connection combine to achieve the desired voltage level.

表 7-1. 4-Level Control Pin Settings

LEVEL	SETTINGS
0	Tie 1-kΩ 5% to GND.
R	Tie 20-kΩ 5% to GND.
F	Float (leave pin open)
1	Tie 1-kΩ 5% to V_{CC}.

备注

All 4-level inputs are latched after the rising edge of EN pin. After these pins are sampled, the internal pull-up and pull-down resistors will be isolated in order to save power.

7.3.2 USB Receiver Linear Equalization

The purpose of receiver equalization is to compensate for channel insertion loss and inter-symbol interference in the system before the input of the TUSB1142. The receiver overcomes these losses by attenuating the low frequency components of the signals with respect to the high frequency components. The proper gain setting should be selected to match the channel insertion loss before the input of the TUSB1142 receivers. Two 4-level inputs pins enable up to 16 possible equalization settings when in pin-strap mode. The TUSB1142's USB 3.2 host, hub, and device receivers (SSTX) and USB 3.2 USB connector receivers (CRX1/2) each have their own two 4-level inputs. The TUSB1142 also provides the flexibility of adjusting settings through I^2C registers.

The TUSB1142's USB host, hub, and device facing port receiver (SSTX) only support Fixed EQ (FEQ). The TUSB1142 implements three different equalizer features for the USB connector facing port receivers (CRX1 and CRX2): Fixed EQ (FEQ), Fast Adaptive EQ (Fast AEQ), and Full Adaptive EQ (Full AEQ). In Fixed EQ operation, a single setting is used for all possible devices (with and without cable) inserted into the USB receptacle. The Fast AEQ feature will distinguish between a short channel and a long channel. A short channel represents a low loss use case of a USB 3.2 device plugged directly into USB receptacle without a cable. A long channel represents the high loss use case of the USB 3.2 device plugged into the receptacle through a USB cable. In Fast AEQ mode, TUSB1142 will select between two pre-determined settings based on whether or not channel is short or long. When TUSB1142 is configured for Full AEQ, the TUSB1142 will automatically determine what it believes is the best equalization setting each time a USB device is inserted into the USB receptacle. In Full AEQ mode, the TUSB1142 will attempt to determine the best settings regardless if the channel is short, long, or somewhere in between.

备注

Adaptive EQ is only supported on CRX1 and CRX2. Adaptive EQ must only be used when CRX1 and CRX2 is connected to a USB receptacle. If CRX1 and CRX2 is connected directly (not through a USB receptacle) to a USB Host, USB Hub or USB Device, then adaptive EQ must be disabled. AEQ should never be enabled in a active cable application. If daisy chaining multiple TUSB1142, AEQ should only be enabled on the TUSB1142 that is near the USB receptacle.

Copyright © 2022 Texas Instruments Incorporated

7.3.2.1 Linear EQ Configuration

Each of the TUSB1142 receiver lanes have individual controls for receiver equalization. The receiver equalization gain value can be controlled either through I²C registers or through pin-straps. 表 7-2 and 表 7-3 details the gain value for each available combination when TUSB1142 is in pin-strap mode. These same options are also available in I²C mode by updating registers CEQ1_SEL, CEQ2_SEL, and SSEQ1_SEL.

表 7-2. USB Connector Facing Port Receiver (CRX1 and CRX2 pins) Equalization Control

Register(s): CEQ1_SEL or CEQ2_SEL Equalization Setting #	CEQ1 PIN Level	CEQ0 PIN Level	EQ Gain at 5 GHz minus Gain at 100 MHz (dB)
0	0	0	-0.4
1	0	R	1.9
2	0	F	3.5
3	0	1	5.0
4	R	0	6.1
5	R	R	7.2
6	R	F	8.0
7	R	1	8.8
8	F	0	9.6
9	F	R	10.2
10	F	F	10.7
11	F	1	11.2
12	1	0	11.6
13	1	R	12.0
14	1	F	12.4
15	1	1	12.7

表 7-3. USB Host Facing Port Receiver (SSTX) Equalization Control

Register(s): SSEQ1_SEL Equalization Setting #	SSEQ1 PIN LEVEL	SSEQ0 PIN LEVEL	EQ Gain at 5 GHz minus Gain at 100 MHz (dB)
0	0	0	0.6
1	0	R	2.8
2	0	F	4.5
3	0	1	6.0
4	R	0	7.0
5	R	R	8.0
6	R	F	9.0
7	R	1	10.0
8	F	0	10.6
9	F	R	11.2
10	F	F	11.7
11	F	1	12.2
12	1	0	12.5
13	1	R	13.0
14	1	F	13.3
15	1	1	13.6

Copyright © 2022 Texas Instruments Incorporated

7.3.2.2 Full Adaptive Equalization

The Full AEQ mode attempts to find what it believes is the best equalization value for CRX1 and CRX2 receivers by starting at the lowest EQ value and sweeping through all EQ combinations up to the value programmed into FULLAEQ_UPPER_EQ field. The default is to sweep through nine EQ values (zero to eight). The number of EQ combinations can be adjusted by programming FULLAEQ_UPPER_EQ register. The TUSB1142 also provides the ability to add or subtract some over/under equalization to compensate for channel in front of TUSB1142 by programming OVER_EQ_CTRL field to a non-zero value. If OVER_EQ_SIGN = 0, the TUSB1142 will add the value programmed into OVER_EQ_CTRL to the EQ value determined by the full adaptation. If OVER_EQ_SIGN = 1, the TUSB1142 will subtract the value programmed into OVER_EQ_CTRL from the EQ value determined by the full adaptation. For example, if full adaptation determines the best equalization value to be 4 and OVER_EQ_CTRL is 2 and OVER_EQ_SIGN = 0, the EQ setting used by TUSB1142 will be 6. The TUSB1142 hardware will always limit the sum of OVER_EQ_CTRL and the determined optimal EQ from full adaptation to be less than or equal to 15.

备注

Full AEQ is supported in both pin-strap and I^2C mode. In pin-strap mode, enable or disable of Full AEQ is determined by the state of AEQENZ pin.

7.3.2.3 Fast Adaptive Equalization

The Fast AEQ mode is used to distinguish two channels (short channel and a long channel) and choose the appropriate receiver equalization setting for that channel. Because Fast AEQ only distinguishes between two choices, the AEQ time is a lot shorter than Full AEQ mode which minimizes impact to USB link training.

When Fast AEQ is enabled and channel is determined to be short, the TUSB1142 will use the value programmed into the CEQx_SEL, where x = 1 or 2. If the TUSB1142 determines channel is not short, the TUSB1142 will switch to EQ value programmed into LONG_EQx register, where x = 1 or 2. During initial system evaluation, it is recommended to perform both short and long channel USB 3.1 RX JTOL Gen2 testing and program CEQx_SEL and LONG_EQx to the value which produced the best results for each channel configuration.

The TUSB1142 will determine short and long based on the estimate eye height. The value programmed into FASTAEQ_LIMITS register will determine the eye height limits. Software can change the defaults of this register to lower or raise the limits.

备注

Fast AEQ is only supported in I^2C mode.

EQ_OVERRIDE field must be set for values programmed into CEQx_SEL and LONG_EQx to be used.

7.3.3 USB Transmitter

7.3.3.1 Linearity VOD

Linearity VOD defines the linearity range of the TUSB1142. When TUSB1142 is in linear VOD mode, the output VOD is a linear function of the input VID. For example, if the signal at TUSB1142's input (VID) is at 600 mVpp then the TUSB1142's output VOD will be around 600 mVpp. Linearity VOD mode is the default operation of the TUSB1142. Linear VOD mode is supported on SSRX and CTX1/2 transmitters.

The TUSB1142 provides four different linearity VOD settings. All four settings are available in I^2C mode through register control. In pin-strap mode, the linearity is fixed at the highest setting.

Copyright © 2022 Texas Instruments Incorporated

7.3.3.2 Limited VOD

Limited VOD mode is used to set the actual VOD level and is used when TUSB1142 is configured in limited redriver mode. In this mode the VOD is no longer a linear function of the input VID. For example, if the signal at TUSB1142's input (VID) is at 600 mVpp then the TUSB1142's output VOD will be around 1000 mVpp (assuming LINR_L3 is selected). The limited redriver mode is only supported on the SSRX transmitter. The TUSB1142 provides four different limited VOD settings. All four settings are available through register control.

备注

Limited redriver mode is disabled by default and can only be enabled by setting the SSRX_LIMIT_ENABLE register. Once enabled, the VOD level for SSRX transmitters is controlled by the USB_SSRX_VOD register

7.3.3.3 Transmit Equalization (Limited Redriver Mode Only)

The TUSB1142 in limited redriver mode offers pre-shoot and de-emphasis controls for SSRX transmitter. The TUSB1142 offers four pre-shoot levels and four de-emphasis levels. These levels can be changed by modifying I^2C registers.

SSRX transmitter equalization is controlled by TX_PRESHOOT and TX_DEEMPHASIS fields. When SSRX_LIMIT_ENABLE = 1 and TX_PRESHOOT_EN = 1, the TX_PRESHOOT field selects between four different pre-shoot levels. When SSRX_LIMIT_ENABLE = 1 and TX_DEEMPHASIS_EN = 1, the TX_DEEMPHASIS field selects between four different de-emphasis levels.

备注

Transmitter equalization control is not supported in pin-strap mode.

7.3.4 USB 3.2 2:1 MUX Description

The TUSB1142 implements a 2:1 MUX between the USB-C receptacle and the USB 3.2 Host, Hub or device. In pin-strap mode the selection of MUX path is controlled from the FLIP pin. In I^2C mode, the MUX is controlled by FLIP_SEL register. Refer to 表 7-4 for details.

表 7-4. USB 3.2 MUX Control

FLIP pin or FLIP_SEL register	EN pin or CTLSEL register	USB Path
X	0	Disabled
0	1	CRX1 -> SSRX
		SSTX -> CTX1
1	1	CRX2 -> SSRX
		SSTX -> CTX2

7.3.5 USB Polarity Inversion

The USB 3.2 standard requires all host, hubs, and devices support USB polarity inversion detection and correction. For this reason, polarity between TUSB1142 and USB connector as well as between USB Host/Device and TUSB1142 does not have to be maintained. Not maintaining polarity will simplify layout by eliminating the need to swap P and N in the layout. The 图 7-1 shows example in which polarity between USB host and redriver is not maintained.

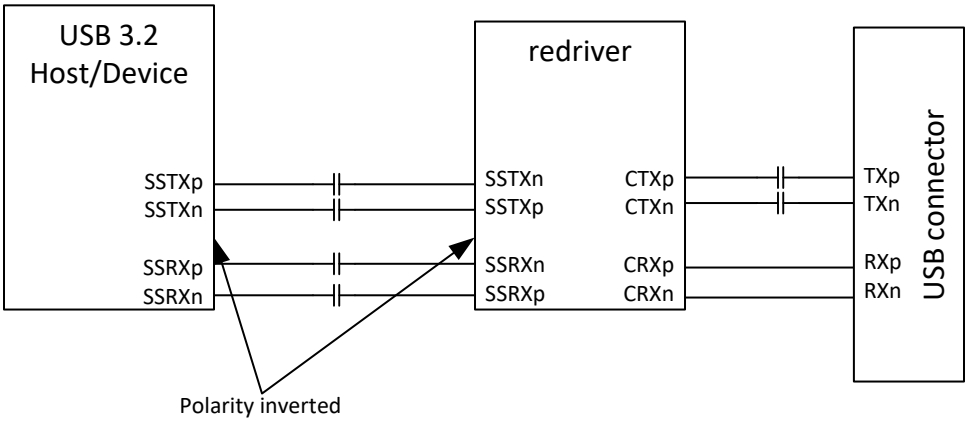

图 7-1. Polarity Inversion Example

7.3.6 Receiver Detect Control

The SLP_S0# pin offers system designers the ability to control the TUSB1142 Rx.Detect functionality during Disconnect and U2/U3 states and therefore achieving lower consumption in these states. When the system is in a low power state (Sx where x = 1, 2, 3, 4, or 5), system can assert SLP_S0# low to disable TUSB1142 receiver detect functionality. While SLP_S0# is asserted low and USB 3.2 interface is in U3, the TUSB1142 keeps receiver termination active. The TUSB1142 will not respond to any LFPS signaling while in this state. This means that system wake from U3 is not supported while SLP_S0# is asserted low. If the TUSB1142 is in Disconnect state when SLP_S0# is asserted low, then TUSB1142 disables all channels receiver termination and disables receiver detect functionality. When SLP_S0# is asserted high, the TUSB1142 resumes normal operation of performing far-end receiver termination detection.

7.4 Device Functional Modes

7.4.1 MODE Pin

The MODE pin selects between between I^2C mode and pin-strap mode. Refer to 表 7-5 for details.

In I^2C mode, the TUSB1142 supports either 1.8-V LVCMOS or 3.3-V LVCMOS signalling based on the sampled state of VIO_SEL pin.

表 7-5. MODE pin Function

MODE pin level	Description
0	Pin-strap mode.
R	Reserved
F	I^2C Mode
1	Reserved.

Copyright © 2022 Texas Instruments Incorporated

7.4.2 Rx EQ Configuration in Pin-Strap Mode

The TUSB1142 configured in pin-strap mode uses the follow pins to control the EQ setting for each of its receivers: EQCFG pin, SSEQ[1:0] pins, CEQ[1:0] pins.

表 7-6. Pin-strap: SSTX Receiver EQ Configuration

SSTX Receiver	SSEQ[1:0] pin level	Gain at 5 GHz	EQCFG pin level
SSTX	SSEQ0 = "0"	3 dB	"1" or "R"
	SSEQ0 = "R"	6 dB	"1" or "R"
	SSEQ0 = "F"	9 dB	"1" or "R"
	SSEQ0 = "1"	12 dB	"1" or "R"
	16 possible settings based on SSEQ0 and SSEQ1	Refer to 表 7-3.	"0" or "F"

The following table describes receiver equalization controls for the receivers facing the USB connector.

表 7-7. Pin Strap: CRX1 and CRX2 EQ Configuration with AEQ Disabled

CRX Receiver	CEQ[1:0] pin level	Gain at 5 GHz	EQCFG pin level
CRX1	CEQ0 = "0"	3 dB	"0" or "R"
	CEQ0 = "R"	6 dB	"0" or "R"
	CEQ0 = "F"	9 dB	"0" or "R"
	CEQ0 = "1"	12 dB	"0" or "R"
	16 possible settings based on CEQ0 and CEQ1	Refer to 表 7-2.	"F" or "1"
CRX2	CEQ1 = "0"	3 dB	"0" or "R"
	CEQ1 = "R"	6 dB	"0" or "R"
	CEQ1 = "F"	9 dB	"0" or "R"
	CEQ1 = "1"	12 dB	"0" or "R"
	16 possible settings based on CEQ0 and CEQ1	Refer to 表 7-2.	"F" or "1"

Copyright © 2022 Texas Instruments Incorporated

7.4.3 USB 3.2 Power States

The TUSB1142 monitors the physical layer conditions like receiver termination, electrical idle, LFPS, and SuperSpeed signaling rate to determine the state of the USB 3.1 interface. Depending on the state of the USB 3.2 interface, the TUSB1142 can be in one of four primary modes of operation when USB 3.1 is enabled: Disconnect, U2/U3, U1, and U0 (Active).

The *Disconnect* state is the state in which TUSB1142 has not detected far-end termination on both upstream facing port (UFP) or downstream facing port (DFP). The disconnect mode is the lowest power mode of each of the four states. The TUSB1142 remains in this state until far-end receiver termination has been detected on both UFP (SSRX) and DFP (CTX). The TUSB1142 immediately exits this mode and enters U0 once far-end termination is detected.

Once in *U0* state, the TUSB1142 will redrive all traffic received on the port in both directions. U0 is the highest power mode of all USB 3.2 power states. The TUSB1142 remains in U0 state until electrical idle occurs on both UFP and DFP. Upon detecting electrical idle, the TUSB1142 immediately transitions to U1.

The *U1* state is the intermediate mode between U0 mode and U2/U3 mode. In U1 mode, the TUSB1142 UFP and DFP receiver termination remains enabled. The UFP and DFP transmitter DC common mode is maintained. The power consumption in U1 is similar to power consumption of U0.

Next to the disconnect state, the *U2/U3* state is next lowest power state. While in this state, the TUSB1142 periodically performs far-end receiver detection. Anytime the far-end receiver termination is not detected on either UFP or DFP, the TUSB1142 leaves the U2/U3 state and transitions to the Disconnect state. It also monitors for a valid LFPS. Upon detection of a valid LFPS, the TUSB1142 immediately transitions to the U0 state. In U2/U3 state, the TUSB1142 receiver terminations remain enabled but the TX DC common mode voltage is not maintained.

7.4.4 Disabling U1 and U2

In systems which have U1 and U2 disabled, it may be necessary to disable U1 and U2 in TUSB1142. In I^2C mode this can be accomplished by setting the USB3_U1_DISABLE field. In pin-strap mode U1 and U2 is enabled by default and can't be disabled.

7.5 Programming

7.5.1 Pseudocode Examples

7.5.1.1 Fixed EQ with Linear Redriver Mode

```
// (address, data)
// Initial power-on configuration.

(0x0A, 0x11), // Linear redriver, EQ_OVERRIDE and USB 3.2
(0x1C, 0x80), // Disable AEQ enable.
(0x32, 0xC0), // VOD control
(0x20, 0x44), // USB connector CRx1/CRx2 EQ setting
(0x21, 0x05), // SSTX receiver EQ.
```

```
// Controls when selecting between normal and flip orientation.
If (USBonly_normal) // USB-C connected and normal orientation.
{ (0x0A,0x11); }
Else if (USBonly_flip) // USB-C connected and Flip orientation.
{ (0x0A, 0x15); }
Else // Nothing connected to USB-C connector. Disable USB 3.2.
{ (0x0A, 0x10); }
```


Copyright © 2022 Texas Instruments Incorporated

7.5.1.2 Fixed EQ with Limited Redriver Mode

```
// (address, data)
// Initial power-on configuration.

(0x0A, 0x91), // Limited redriver, EQ_OVERRIDE and USB 3.2
(0x0B, 0x6F), // SSRX limited.  Preshoot and de-emphasis.


(0x1C, 0x80), // Disable AEQ enable.
(0x32, 0xC0), // VOD control
(0x20, 0x44), // USB connector CRx1/CRx2 EQ setting
(0x21, 0x05), // SSTX receiver EQ.
```

```
// Controls when selecting between normal and flip orientation.
If (USBonly_normal) // USB-C connected and normal orientation.
{ (0x0A,0x91); }
Else if (USBonly_flip) // USB-C connected and Flip orientation.
{ (0x0A, 0x95); }
Else // Nothing connected to USB-C connector. Disable USB 3.2.
{ (0x0A, 0x90); }
```

7.5.1.3 Fast AEQ with Linear Redriver Mode

```
// (address, data)
// Initial power-on configuration.

(0x0A, 0x11), // Linear redriver, EQ_OVERRIDE and USB 3.2
(0x1C, 0x81), // Fast AEQ enable.
(0x32, 0xC0), // VOD control
(0x1D, 0x10), // Over EQ adjustment
(0x1E, 0x77), // USB connector CRx1/CRx2 long channel EQ setting
(0x20, 0x11), // USB connector CRx1/CRx2 short channel EQ setting
(0x21, 0x05), // SSTX receiver EQ.
```

```
// Controls when selecting between normal and flip orientation.
If (USBonly_normal) // USB-C connected and normal orientation.
{ (0x0A,0x11); }
Else if (USBonly_flip) // USB-C connected and Flip orientation.
{ (0x0A, 0x15); }
Else // Nothing connected to USB-C connector. Disable USB 3.2.
{ (0x0A, 0x10); }
```

Copyright © 2022 Texas Instruments Incorporated

7.5.1.4 Fast AEQ with Limited Redriver Mode

```
// (address, data)
// Initial power-on configuration.

(0x0A, 0x91), // Limited redriver, EQ_OVERRIDE and USB 3.2
(0x0B, 0x6F), // SSRX limited.  Preshoot and de-emphasis.


(0x32, 0xC0), // VOD control
(0x1C, 0x81), // Fast AEQ enable.
(0x1D, 0x10), // Over EQ adjustment
(0x1E, 0x77), // USB connector CRx1/CRx2 long channel EQ setting
(0x20, 0x11), // USB connector CRx1/CRx2 short channel EQ setting
(0x21, 0x05), // SSTX receiver EQ.
```

```
// Controls when selecting between normal and flip orientation.
If (USBonly_normal) // USB-C connected and normal orientation.
{ (0x0A,0x91); }
Else if (USBonly_flip) // USB-C connected and Flip orientation.
{ (0x0A, 0x95); }
Else // Nothing connected to USB-C connector. Disable USB 3.2.
{ (0x0A, 0x90); }
```

7.5.1.5 Full AEQ with Linear Redriver Mode

```
// (address, data)
// Initial power-on configuration.

(0x0A, 0x11), // Linear redriver, EQ_OVERRIDE and USB 3.2
(0x32, 0xC0), // VOD control
(0x1C, 0x85), // Full AEQ enable. Set upper EQ limit to 0x8.
(0x1D, 0x10), // Over EQ adjustment
(0x20, 0x11), // USB connector CRx1/CRx2 EQ. Not used in Full AEQ.
(0x21, 0x05), // SSTX receiver EQ.
```

```
// Controls when selecting between normal and flip orientation.
If (USBonly_normal) // USB-C connected and normal orientation.
{ (0x0A,0x11); }
Else if (USBonly_flip) // USB-C connected and Flip orientation.
{ (0x0A, 0x15); }
Else // Nothing connected to Type-C. Disable USB 3.2.
{ (0x0A, 0x10); }
```


Copyright © 2022 Texas Instruments Incorporated

7.5.1.6 Full AEQ with Limited Redriver Mode

```
// (address, data)
// Initial power-on configuration.

(0x0A, 0x91), // Limited redriver, EQ_OVERRIDE and USB 3.2
(0x0B, 0x6F), // SSRX limited.  Preshoot and de-emphasis.


(0x32, 0xC0), // VOD control
(0x1C, 0x85), // Full AEQ enable.
(0x1D, 0x10), // Over EQ adjustment
(0x20, 0x11), // USB connector CRx1/CRx2 short channel EQ setting. Not used for Full AEQ.
(0x21, 0x05), // SSTX receiver EQ.
```

```
// Controls when selecting between normal and flip orientation.
If (USBonly_normal) // USB-C connected and normal orientation.
{ (0x0A,0x91); }
Else if (USBonly_flip) // USB-C connected and Flip orientation.
{ (0x0A, 0x95); }
Else // Nothing connected to USB-C connector. Disable USB 3.2.
{ (0x0A, 0x90); }
```

7.5.2 TUSB1142 I²C Address Options

For further programmability, the TUSB1142 can be controlled using I²C. The SCL and SDA pins are used for I²C clock and I²C data respectively.

表 7-8. TUSB1142 I²C Target Address

SSEQ1/A1 PIN LEVEL	SSEQ0/A0 PIN LEVEL	7-bit Address	Bit 7 (MSB)	Bit 6	Bit 5	Bit 4	Bit 3	Bit 2	Bit 1	Bit 0 (W/R)
0	0	44h	1	0	0	0	1	0	0	0/1
0	R	45h	1	0	0	0	1	0	1	0/1
0	F	46h	1	0	0	0	1	1	0	0/1
0	1	47h	1	0	0	0	1	1	1	0/1
R	0	20h	0	1	0	0	0	0	0	0/1
R	R	21h	0	1	0	0	0	0	1	0/1
R	F	22h	0	1	0	0	0	1	0	0/1
R	1	23h	0	1	0	0	0	1	1	0/1
F	0	10h	0	0	1	0	0	0	0	0/1
F	R	11h	0	0	1	0	0	0	1	0/1
F	F	12h	0	0	1	0	0	1	0	0/1
F	1	13h	0	0	1	0	0	1	1	0/1
1	0	Ch	0	0	0	1	1	0	0	0/1
1	R	Dh	0	0	0	1	1	0	1	0/1
1	F	Eh	0	0	0	1	1	1	0	0/1
1	1	Fh	0	0	0	1	1	1	1	0/1

Copyright © 2022 Texas Instruments Incorporated

7.5.3 TUSB1142 I²C Target Behavior

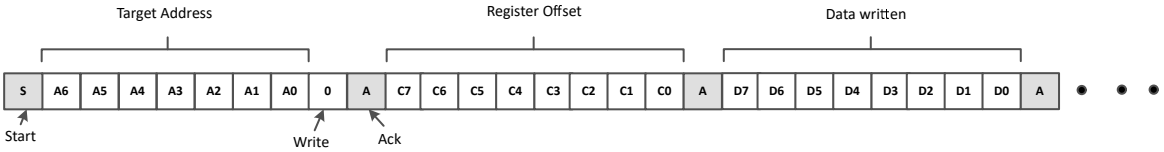

图 7-2. I2C Write with Data

The following procedure should be followed to write data to TUSB1142 I²C registers (refer to 图 7-2):

1. The controller initiates a write operation by generating a start condition (S), followed by the TUSB1142 7-bit address and a zero-value "W/R" bit to indicate a write cycle.
2. The TUSB1142 acknowledges the address cycle.
3. The controller presents the register offset within TUSB1142 to be written, consisting of one byte of data, MSB-first.
4. The TUSB1142 acknowledges the sub-address cycle.
5. The controller presents the first byte of data to be written to the I²C register.
6. The TUSB1142 acknowledges the byte transfer.
7. The controller may continue presenting additional bytes of data to be written, with each byte transfer completing with an acknowledge from the TUSB1142.
8. The controller terminates the write operation by generating a stop condition (P).

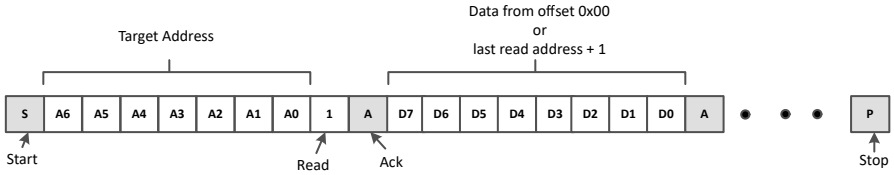

图 7-3. I2C Read Without Repeated Start

The following procedure should be followed to read the TUSB1142 I²C registers without a repeated Start (refer 图 7-3).

1. The controller initiates a read operation by generating a start condition (S), followed by the TUSB1142 7-bit address and a zero-value "W/R" bit to indicate a read cycle.
2. The TUSB1142 acknowledges the 7-bit address cycle.
3. Following the acknowledge the controller continues sending clock.
4. The TUSB1142 transmit the contents of the memory registers MSB-first starting at register 00h or last read register offset+1. If a write to the I²C register occurred prior to the read, then the TUSB1142 shall start at the register offset specified in the write.
5. The TUSB1142 waits for either an acknowledge (ACK) or a not-acknowledge (NACK) from the controller after each byte transfer; the I²C controller acknowledges reception of each data byte transfer.
6. If an ACK is received, the TUSB1142 transmits the next byte of data as long as controller provides the clock. If a NAK is received, the TUSB1142 stops providing data and waits for a stop condition (P).
7. The controller terminates the write operation by generating a stop condition (P).

Copyright © 2022 Texas Instruments Incorporated

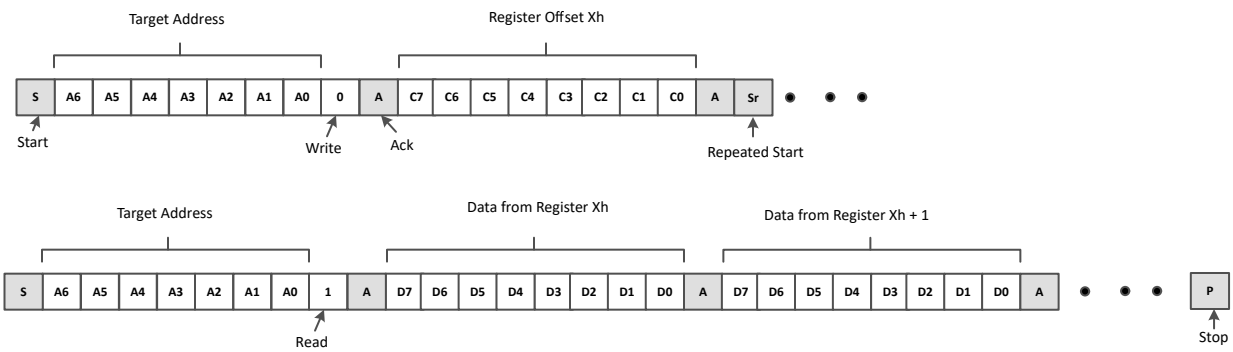

图 7-4. I2C Read with Repeated Start

The following procedure should be followed to read the TUSB1142 I^{2}C registers with a repeated Start (refer 图 7-4).

1. The controller initiates a read operation by generating a start condition (S), followed by the TUSB1142 7-bit address and a zero-value “W/R” bit to indicate a write cycle.
2. The TUSB1142 acknowledges the 7-bit address cycle.
3. The controller presents the register offset within TUSB1142 to be written, consisting of one byte of data, MSB-first.
4. The TUSB1142 acknowledges the register offset cycle.
5. The controller presents a repeated start condition (Sr).
6. The controller initiates a read operation by generating a start condition (S), followed by the TUSB1142 7-bit address and a one-value “W/R” bit to indicate a read cycle.
7. The TUSB1142 acknowledges the 7-bit address cycle.
8. The TUSB1142 transmit the contents of the memory registers MSB-first starting at the register offset.
9. The TUSB1142 shall wait for either an acknowledge (ACK) or a not-acknowledge (NACK) from the controller after each byte transfer; the I^{2}C controller acknowledges reception of each data byte transfer.
10. If an ACK is received, the TUSB1142 transmits the next byte of data as long as controller provides the clock. If a NAK is received, the TUSB1142 stops providing data and waits for a stop condition (P).
11. The controller terminates the read operation by generating a stop condition (P).

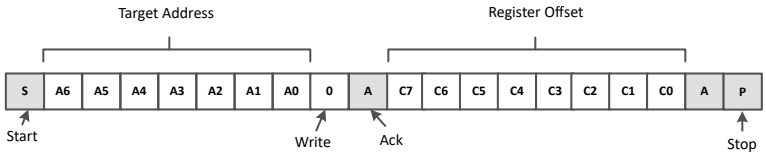

图 7-5. I2C Write Without Data

The following procedure should be followed for setting a starting sub-address for I^{2}C reads (refer to 图 7-5).

1. The controller initiates a write operation by generating a start condition (S), followed by the TUSB1142 7-bit address and a zero-value “W/R” bit to indicate a write cycle.
2. The TUSB1142 acknowledges the address cycle.
3. The controller presents the register offset within TUSB1142 to be written, consisting of one byte of data, MSB-first.
4. The TUSB1142 acknowledges the register offset cycle.
5. The controller terminates the write operation by generating a stop condition (P).

备注

After initial power-up, if no register offset is included for the read procedure (refer to 图 7-3), then reads start at register offset 00h and continue byte by byte through the registers until the I²C controller terminates the read operation. During a read operation, the TUSB1142 auto-increments the I²C internal register address of the last byte transferred independent of whether or not an ACK was received from the I2C controller.

7.6 Register Map

7.6.1 TUSB1142 Registers

表 7-9 lists the memory-mapped registers for the TUSB1142 registers. All register offset addresses not listed in 表 7-9 should be considered as reserved locations and the register contents should not be modified.

表 7-9. TUSB1142 Registers

Offset	Acronym	Register Name	Section
8h	Rev_ID	Revision ID Register	节 7.6.1.1
Ah	General_1	General Register	节 7.6.1.2
Bh	TX1EQ_CTRL	TX1 EQ Control	节 7.6.1.3
1Ch	AEQ_CONTROL1	AEQ Controls	节 7.6.1.4
1Dh	AEQ_CONTROL2	AEQ Controls	节 7.6.1.5
1Eh	AEQ_LONG	AEQ setting for Long channel	节 7.6.1.6
20h	USBC_EQ	EQ control for CRX1 and CRX2 receivers	节 7.6.1.7
21h	SS_EQ	EQ Control for SSTX receiver	节 7.6.1.8
22h	USB3_MISC	Misc USB3 Controls	节 7.6.1.9
24h	USB1_STATUS	USB1 state machine status	节 7.6.1.10
25h	USB2_STATUS	USB2 state machine status	节 7.6.1.11
32h	VOD_CTRL	VOD Linearity and AEQ Controls	节 7.6.1.12
3Bh	AEQ1_STATUS	Full and Fast AEQ status	节 7.6.1.13
3Ch	AEQ2_STATUS	Full and Fast AEQ status	节 7.6.1.14
50h	AEQ_CONTROL_AUX1		节 7.6.1.15
51h	AEQ_CONTROL_AUX2		节 7.6.1.16
52h	AEQ_CONTROL_AUX3		节 7.6.1.17

Complex bit access types are encoded to fit into small table cells. 表 7-10 shows the codes that are used for access types in this section.

表 7-10. TUSB1142 Access Type Codes

Access Type	Code	Description
Read Type		
H	H	Set or cleared by hardware
R	R	Read
RH	R H	Read Set or cleared by hardware
Write Type		
W	W	Write
W1C	W 1C	Write 1 to clear
W1S	W 1S	Write 1 to set

Copyright © 2022 Texas Instruments Incorporated

表 7-10. TUSB1142 Access Type Codes (continued)

Access Type	Code	Description
WtoP	W	Write
Reset or Default Value		
-n		Value after reset or the default value

7.6.1.1 Rev_ID Register (Offset = 8h) [Reset = 01h]

Rev_ID is shown in 表 7-11.

Return to the 表 7-9.

表 7-11. Rev_ID Register Field Descriptions

Bit	Field	Type	Reset	Description
7-0	REVISION_ID	RH	1h	Device Revision

7.6.1.2 General_1 Register (Offset = Ah) [Reset = 00h]

General_1 is shown in 表 7-12.

Return to the 表 7-9.

This register is used to enable USB as well as selecting the orientation of the MUX. Software should set EQ_OVERRIDE bit in order for EQ registers to be used instead of pins.

表 7-12. General_1 Register Field Descriptions

Bit	Field	Type	Reset	Description
7	SSRX_LIMIT_ENABLE	R/W	0h	Limited redriver mode enable for SSRX transmitter. 0h = Linear Redriver 1h = Limited Redriver
6	RESERVED	R	0h	Reserved
5	RESERVED	R	0h	Reserved
4	EQ_OVERRIDE	R/W	0h	Setting this field will allow software to use EQ settings from registers instead of value sampled from pins. 0h = EQ settings based on sampled state of EQ pins. 1h = EQ settings based on programmed value of each of the EQ registers.
3	RESERVED	R	0h	Reserved
2	FLIP_SEL	R/W	0h	This field controls the orientation. 0h = Normal Orientation 1h = Flip orientation.
1-0	CTLSEL	R/W	0h	Controls whether USB is enabled or not. 0h = Disabled 1h = USB enabled. 2h = Disabled 3h = USB enabled

7.6.1.3 TX1EQ_CTRL Register (Offset = Bh) [Reset = 6Fh]

TX1EQ_CTRL is shown in 表 7-13.

Return to the 表 7-9.

This register controls the pre-shoot and de-emphasis levels for SSRX when limited redriver mode is enabled.

表 7-13. TX1EQ_CTRL Register Field Descriptions

Bit	Field	Type	Reset	Description
7-6	SSRX_PRESHOOT	R/W	1h	SSRX TX preshoot level (pre-cursor). 0h = 1.5 dB 1h = 2 dB 2h = 2.3 dB 3h = 2.8 dB
5	SSRX_PRESHOOT_EN	R/W	1h	SSRX TX preshoot (pre-cursor) enabled. Valid only when SSRX_LIMIT_ENABLE = 1. 0h = Disabled (0 dB) 1h = Enabled
4-3	SSRX_DEEMPHASIS	R/W	1h	SSRX TX de-emphasis level (post-cursor) 0h = -1.5 dB 1h = -2.1 dB 2h = -3.2 dB 3h = -3.8 dB
2	SSRX_DEEMPHASIS_EN	R/W	1h	SSRX TX de-emphasis (post-cursor) enable. Valid only when SSRX_LIMIT_ENABLE = 1. 0h = Disabled (0 dB) 1h = Enabled
1-0	RESERVED	R/W	3h	Reserved

7.6.1.4 AEQ_CONTROL1 Register (Offset = 1Ch) [Reset = 85h]

AEQ_CONTROL1 is shown in 表 7-14.

Return to the 表 7-9.

This register is used to enable adaptive EQ and select between Fast and Full adaptive EQ.

表 7-14. AEQ_CONTROL1 Register Field Descriptions

Bit	Field	Type	Reset	Description
7-4	FULLAEQ_UPPER_EQ	R/W	8h	This field sets the maximum EQ value to check for full AEQ mode when in I^2C mode.
3	USB3_U1_DISABLE	R/W	0h	This field when set will cause entry to U3 instead of U1 when electrical idle is detected. 0h = U1 entry after electrical idle. 1h = U3 entry after electrical idle.
2-1	AEQ_MODE	R/W	2h	Selects Adaption mode (Fast, or one of three Full modes). 0h = Fast AEQ. 1h = Full AEQ, with hits counted at mideye for every EQ iteration (using current EQ setting). 2h = Full AEQ, algorithm II. 3h = Full AEQ, with hits counted at mideye only for first EQ iteration (using EQ set to the MID_HC_EQ value).
0	AEQ_EN	R/W	1h	Controls whether or not adaptive EQ for USB downstream facing port is enabled. 0h = AEQ disabled 1h = AEQ enabled

7.6.1.5 AEQ_CONTROL2 Register (Offset = 1Dh) [Reset = 10h]

AEQ_CONTROL2 is shown in 表 7-15.

Return to the 表 7-9.

This register allows for controls for the Fast AEQ limits as well as adding or reducing final EQ value used by the Full AEQ function.

Copyright © 2022 Texas Instruments Incorporated

表 7-15. AEQ_CONTROL2 Register Field Descriptions

Bit	Field	Type	Reset	Description
7	OVER_EQ_SIGN	R/W	0h	Selects the sign for OVER_EQ_CTRL field. 0h = positive 1h = negative
6	RESERVED	R	0h	Reserved
5-3	FASTAEQ_LIMITS	R/W	2h	Selects the upper/lower limits of DAC for determining short vs long channel. 0h = ± 0 mV 1h = ± 40 mV 2h = ± 80 mV 3h = ± 120 mV 4h = ± 160 mV 5h = ± 200 mV 6h = ± 240 mV 7h = ± 280 mV
2-0	OVER_EQ_CTRL	R/W	0h	This field will increase or decrease the AEQ by value programmed into this field. For example, full AEQ value is 6 and this field is programmed to 2 and OVER_EQ_SIGN = 0, then EQ value used will be 8. This field is only used in Full AEQ mode. 0h = 0 or -8 1h = 1 or -7 2h = 2 or -6 3h = 3 or -5 4h = 4 or -4 5h = 5 or -3 6h = 6 or -2 7h = 7 or -1

7.6.1.6 AEQ_LONG Register (Offset = 1Eh) [Reset = 77h]

AEQ_LONG is shown in 表 7-16.

Return to the 表 7-9.

This register is used to program the EQ used for long channel setting when Fast AEQ is enabled.

表 7-16. AEQ_LONG Register Field Descriptions

Bit	Field	Type	Reset	Description
7-4	LONG_CEQ2	R/W	7h	When AEQ_EN = 1 and AEQ_MODE = x0 (i.e., Fast), selects EQ setting for USB connector port2 (CRX2) when long channel is detected. The user should program this field with the value that provides the best Rx JTOL results for a long channel configuration.
3-0	LONG_CEQ1	R/W	7h	When AEQ_EN = 1 and AEQ_MODE = x0, selects EQ setting for USB connector port1 (CRX1) when long channel is detected. The user should program this field with the value that provides the best Rx JTOL results for a long channel configuration.

7.6.1.7 USBC_EQ Register (Offset = 20h) [Reset = 00h]

USBC_EQ is shown in 表 7-17.

Return to the 表 7-9.

This register controls the receiver equalization setting for the connector receiver (CRX1 and CRX2).

表 7-17. USBC_EQ Register Field Descriptions

Bit	Field	Type	Reset	Description
7-4	CEQ2_SEL	RH/W	0h	If AEQ_EN = 0, this field selects EQ for USB CRX2 receiver which faces the USB-C receptacle. When EQ_OVERRIDE = 0b, this field reflects the sampled state of CEQ[1:0] pins. When EQ_OVERRIDE = 1b, software can change the EQ setting for CRX2p/n pins based on value written to this field. When AEQ_EN = 1 and AEQ_MODE = x0, selects EQ setting for USB connector port2 (CRX2) when short channel is detected. The user should program this field with the value that provides the best Rx JTOL results for a short channel configuration.
3-0	CEQ1_SEL	RH/W	0h	If AEQ_EN = 0, this field selects EQ for USB CRX1 receiver which faces the USB-C receptacle. When EQ_OVERRIDE = 0b, this field reflects the sampled state of CEQ[1:0] pins. When EQ_OVERRIDE = 1b, software can change the EQ setting for CRX1p/n pins based on value written to this field. When AEQ_EN = 1 and AEQ_MODE = x0, selects EQ setting for USB connector port1 (CRX1) when short channel is detected. The user should program this field with the value that provides the best Rx JTOL results for a short channel configuration.

7.6.1.8 SS_EQ Register (Offset = 21h) [Reset = 00h]

SS_EQ is shown in 表 7-18.

Return to the 表 7-9.

This register controls the receiver equalization setting for the SSTX.

表 7-18. SS_EQ Register Field Descriptions

Bit	Field	Type	Reset	Description
7-4	RESERVED	RH/W	0h	Reserved
3-0	SSEQ1_SEL	RH/W	0h	This field selects EQ for USB SSTX receiver which faces the USB host. When EQ_OVERRIDE = 0b, this field reflects the sampled state of SSEQ[1:0] pins. When EQ_OVERRIDE = 1b, software can change the EQ setting for SSTXp/n pins based on value written to this field.

7.6.1.9 USB3_MISC Register (Offset = 22h) [Reset = 04h]

USB3_MISC is shown in 表 7-19.

Return to the 表 7-9.

表 7-19. USB3_MISC Register Field Descriptions

Bit	Field	Type	Reset	Description
7	RXD_START_TERM	R/W	0h	Termination setting at start of RX detection following warm reset and at entry to SS.Inactive. 0h = Maintain termination. 1h = Turn off termination. Avoid compliance failures due to race between local and remote rxd in case of disconnect. If connection remains next state was polling regardless.
6-5	U23_RXDET_INTERVAL	R/W	0h	This field controls the Rx.Detect interval for the downstream facing port (CTX1P/N and CTX2P/N) when in U2/U3. 0h = 48 ms 1h = 84 ms 2h = 120 ms 3h = 156 ms
4	DISABLE_U2U3_RXDET	R/W	0h	Controls whether or not Rx.Detect is performed in U2/U3 state. 0h = Rx.Detect in U2/U3 enabled. 1h = Rx.Detect in U2/U3 disabled.

Copyright © 2022 Texas Instruments Incorporated

表 7-19. USB3_MISC Register Field Descriptions (continued)

Bit	Field	Type	Reset	Description
3-2	DFP_RXDET_INTERVAL	R/W	1h	This field controls the Rx.Detect interval for the downstream facing port (CTX1P/N and CTX2P/N). 0h = 4 ms 1h = 6 ms 2h = 36 ms 3h = 84 ms
1	DIS_WARM_RESET_RXD	R/W	0h	Disables receiver detection following warm reset if device starts polling during warm reset. 0h = whether receiver detection is done following warm reset depends on other settings. 1h = if USB FSM detects that device started polling during warm reset, it will not do receiver detection.
0	USB_COMPLIANCE_CTRL	R/W	0h	Controls whether compliance mode detection is determined by FSM or disabled 0h = Compliance mode determined by FSM. 1h = Compliance mode disabled.

7.6.1.10 USB1_STATUS Register (Offset = 24h) [Reset = 01h]

USB1_STATUS is shown in 表 7-20.

Return to the 表 7-9.

表 7-20. USB1_STATUS Register Field Descriptions

Bit	Field	Type	Reset	Description
7	USB1_FASTAEQ_STAT	RH	0h	When AEQ_EN = 1 and AEQ_MODE = x0, this status field indicates whether short or long EQ setting is used. When AEQ_EN = 0, this field will always default to 0h. 0h = Short channel EQ used. 1h = Long channel EQ used.
6	RESERVED	RH/W1C	0h	Reserved
5	RESERVED	RH	0h	Reserved
4	RESERVED	RH	0h	Reserved
3	CM_ACTIVE1	RH	0h	Compliance mode status. 0h = Not in USB3.1 compliance mode. 1h = In USB3.1 compliance mode.
2	U0_STAT1	RH	0h	U0 Status. Set if enters U0 state.
1	U2U3_STAT1	RH	0h	U2/U3 Status. Set if enters U2/U3 state.
0	DISC_STAT1	RH	1h	Disconnect Status. Set if enters Disconnect state.

7.6.1.11 USB2_STATUS Register (Offset = 25h) [Reset = 01h]

USB2_STATUS is shown in 表 7-21.

Return to the 表 7-9.

表 7-21. USB2_STATUS Register Field Descriptions

Bit	Field	Type	Reset	Description
7	USB2_FASTAEQ_STAT	RH	0h	When AEQ_EN = 1 and AEQ_MODE = x0, this status field indicates whether short or long EQ setting is used. When AEQ_EN = 0, this field will always default to 0h. 0h = Short channel EQ used. 1h = Long channel EQ used.
6	RESERVED	RH/W1C	0h	Reserved
5	RESERVED	RH	0h	Reserved

表 7-21. USB2_STATUS Register Field Descriptions (continued)

Bit	Field	Type	Reset	Description
4	RESERVED	RH	0h	Reserved
3	CM_ACTIVE2	RH	0h	Compliance mode status. 0h = Not in USB3.1 compliance mode. 1h = In USB3.1 compliance mode.
2	U0_STAT2	RH	0h	U0 Status. Set if enters U0 state.
1	U2U3_STAT2	RH	0h	U2/U3 Status. Set if enters U2/U3 state.
0	DISC_STAT2	RH	1h	Disconnect Status. Set if enters Disconnect state.

7.6.1.12 VOD_CTRL Register (Offset = 32h) [Reset = C0h]

VOD_CTRL is shown in 表 7-22.

Return to the 表 7-9.

This register controls the transmitters output linearity range for both UFP and DFP. When device is configured for limited redriver (SSRX_LIMIT_ENABLE field is set), USB_SSRX_VOD controls the VOD level for SSRX limited driver.

表 7-22. VOD_CTRL Register Field Descriptions

Bit	Field	Type	Reset	Description
7-6	LFPS_VOD	R/W	3h	VOD linearity control for SSRX, CTX1, and CTX2 when LFPS is being transmitted. 0h = LINR_L3 (highest) 1h = LINR_L2 2h = LINR_L1 3h = LINR_L0 (lowest)
5-4	RESERVED	R	0h	Reserved
3-2	USB_CTX12_VOD	R/W	0h	VOD linearity control for USB connector facing ports (CTX1 and CTX2). 0h = LINR_L3 (highest) 1h = LINR_L2 2h = LINR_L1 3h = LINR_L0 (lowest)
1-0	USB_SSRX12_VOD	R/W	0h	VOD linearity control for USB upstream facing port (SSRX). When SSRX_LIMIT_ENABLE = 1, then this field controls the limited VOD for SSRX. 0h = LINR_L3 (highest) 1h = LINR_L2 2h = LINR_L1 3h = LINR_L0 (lowest)

7.6.1.13 AEQ1_STATUS Register (Offset = 3Bh) [Reset = 00h]

AEQ1_STATUS is shown in 表 7-23.

Return to the 表 7-9.

This register provides the status of AEQ function.

表 7-23. AEQ1_STATUS Register Field Descriptions

Bit	Field	Type	Reset	Description
7-5	RESERVED	R	0h	Reserved
4	RESERVED	RH	0h	Reserved

Copyright © 2022 Texas Instruments Incorporated

表 7-23. AEQ1_STATUS Register Field Descriptions (continued)

Bit	Field	Type	Reset	Description
3-0	AEQ1_EQ_STAT	RH	0h	Optimal EQ determined by FSM after the completion of Full AEQ. This field will also indicate EQ used for Fast AEQ. This field will include the value programmed into OVER_EQ_CTRL field.

7.6.1.14 AEQ2_STATUS Register (Offset = 3Ch) [Reset = 00h]

AEQ2_STATUS is shown in 表 7-24.

Return to the 表 7-9.

This register provides the status of AEQ function.

表 7-24. AEQ2_STATUS Register Field Descriptions

Bit	Field	Type	Reset	Description
7-5	RESERVED	R	0h	Reserved
4	RESERVED	RH	0h	Reserved
3-0	AEQ2_EQ_STAT	RH	0h	Optimal EQ determined by FSM after the completion of Full AEQ. This field will also indicate EQ used for Fast AEQ. This field will include the value programmed into OVER_EQ_CTRL field.

7.6.1.15 AEQ_CONTROL_AUX1 Register (Offset = 50h) [Reset = 00h]

AEQ_CONTROL_AUX1 is shown in 表 7-25.

Return to the 表 7-9.

表 7-25. AEQ_CONTROL_AUX1 Register Field Descriptions

Bit	Field	Type	Reset	Description
7-6	RESERVED	R	0h	Reserved
5-2	RESERVED	R	0h	Reserved
1-0	RESERVED	R	0h	Reserved

7.6.1.16 AEQ_CONTROL_AUX2 Register (Offset = 51h) [Reset = 07h]

AEQ_CONTROL_AUX2 is shown in 表 7-26.

Return to the 表 7-9.

表 7-26. AEQ_CONTROL_AUX2 Register Field Descriptions

Bit	Field	Type	Reset	Description
7-5	RESERVED	R	0h	Reserved
4	EQ_MERGE	R/W	0h	Initial EQ result merge control. This field controls how the EQ results from the positive and negative VOD offsets steps are merged to produce the initial EQ value. This field is applicable only when the AEQ_MODE field is set to 2'b10. 0h = Use max of pos/neg VOD EQs 1h = Use min of pos/neg VOD EQs
3-0	MID_HC_EQ	R/W	7h	Sets EQ value during the mid-eye hit-count capture step. This field is applicable only when the AEQ_MODE field is set to 2'b10 or 2'b11.

7.6.1.17 AEQ_CONTROL_AUX3 Register (Offset = 52h) [Reset = 86h]

AEQ_CONTROL_AUX3 is shown in 表 7-27.

Return to the 表 7-9.

表 7-27. AEQ_CONTROL_AUX3 Register Field Descriptions

Bit	Field	Type	Reset	Description
7-5	HC_EQ_THR	R/W	4h	Sets the hit-count threshold during the EQ search steps. The algorithm will find the minimum EQ setting such that the hit-count is at or above value N_eq, where: N_eq = HC_me * (128-HC_EQ_THR)/128 and HC_me is the mid-eye hit-count. This field is applicable only when the AEQ_MODE field is set to 2'b10.
4	RESERVED	R	0h	Reserved
3-0	HC_VOD_THR	R/W	6h	Sets the hit-count threshold during the VOD search steps. The algorithm will find the maximum DAC VOD setting such that the hit-count is at or above the threshold value N_vod, where: N_vod = HC_me * HC_VOD_THR/128 and HC_me is the mid-eye hit-count. This field is applicable only when the AEQ_MODE field is set to 2'b10.

Copyright © 2022 Texas Instruments Incorporated

8 Application and Implementation

备注

以下应用部分中的信息不属于 TI 器件规格的范围，TI 不担保其准确性和完整性。TI 的客 户应负责确定器件是否适用于其应用。客户应验证并测试其设计，以确保系统功能。

8.1 Application Information

The TUSB1142 is a linear redriver designed specifically to compensate for intersymbol interference (ISI) jitter causes by signal attenuation through a passive medium like PCB traces or cables. Placing the TUSB1142 between the USB connector and a USB 3.2 host, hub, and device can correct signal integrity issues resulting in a more robust system.

9 Typical Application

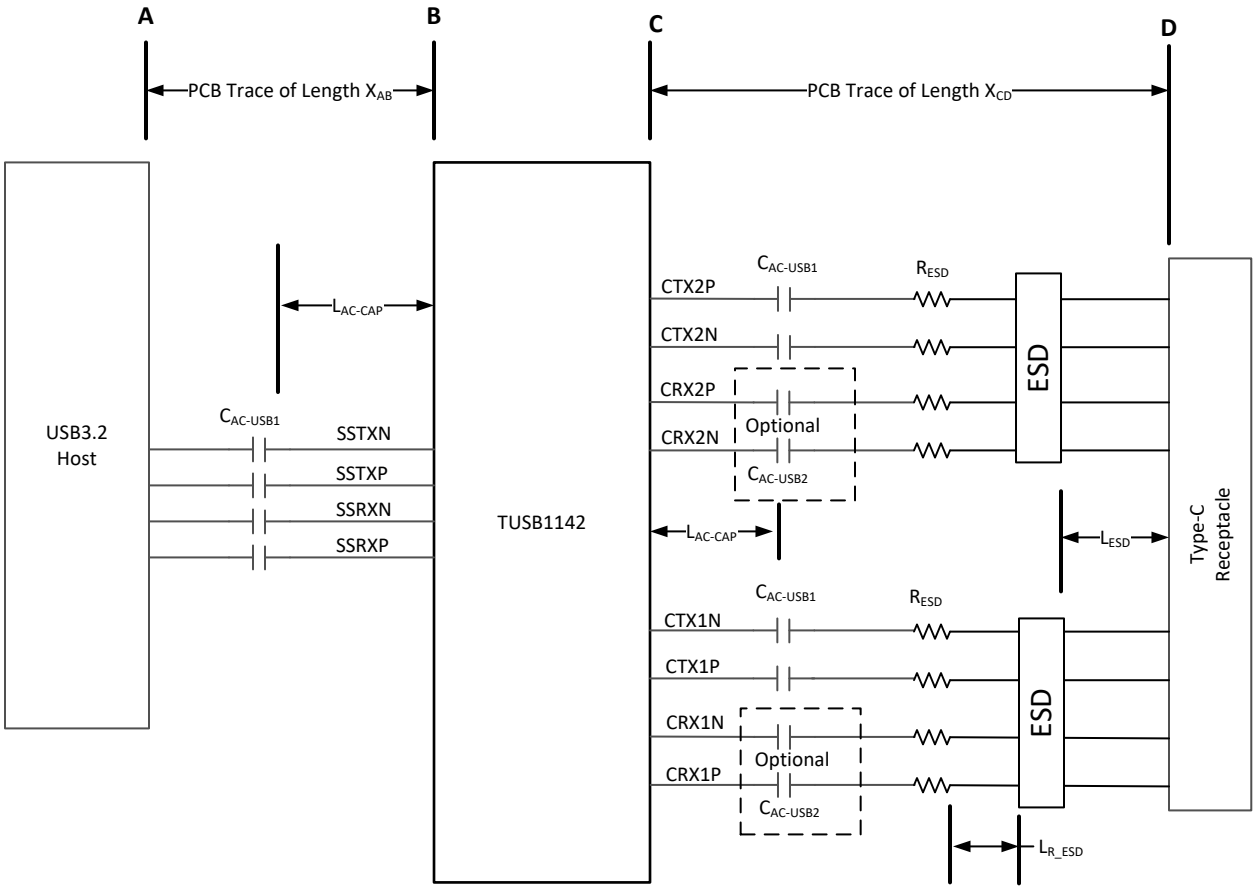

图 9-1. Typical USB Host Application

10 Design Requirements

For this design example, use the parameters shown in 表 10-1.

表 10-1. Design Parameters

PARAMETER	VALUE
10 Gbps USB 3.2 pre-channel A to B PCB trace length, X_{AB}. Refer to 图 9-1.	2 inches <= X_{AB} <= 12 inches - X_{CD}
10 Gbps USB post-channel C to D PCB trace length, X_{CD}. Refer to 图 9-1.	up to 4 inches
Minimum distance of the AC capacitors from TUSB1142, L_{AC-CAP}	0.4 inches
Maximum distance of ESD component from the USB receptacle, L_{ESD}	1.0 inches
Maximum distance of series resistor (R_{ESD}) from ESD component, L_{R_ESD}.	0.25 inches
$C_{AC-USB1}$ AC-coupling capacitor (75 nF to 265 nF)	220 nF
$C_{AC-USB2}$ AC-coupling capacitor (297 nF to 363 nF)	Options: • RX1 and RX2 are DC-coupled to USB receptacle • 330 nF AC-couple with R_{RX} resistor
Optional R_{RX} resistor (220-kΩ ± 5%)	No used
R_{ESD} (0-Ω to 2.2-Ω)	1-Ω
V_{CC} supply (3-V to 3.6-V)	3.3-V
I^2C Mode or Pin-strap Mode	I^2C Mode. (MODE = "F")
1.8-V or 3.3-V I^2C Interface	3.3-V I^2C. VIO_SEL pin to Float "F".

11 Detailed Design Procedure

A typical usage of the TUSB1142 device is shown in 图 11-1. The device can be configure either through its GPIO pins or through its I^2C interface. In the following example, a Type-C PD controller or microcontroller is used to configure the device through the I^2C interface. In I^2C mode, the equalization settings for each receiver can be independently controlled through I^2C registers. For this reason, all of the equalization pins (SSEQ[1:0], and CEQ[1:0]) can be left unconnected. If these pins are left unconnected, the TUSB1142 7-bit I2C target address will be 0x12 because both SSEQ1/A1 and SSEQ0/A0 will be at pin level *F*. If a different I2C target address is desired, SSEQ1/A1 and SSEQ0/A0 pins should be set to a level which produces the desired I2C target address.

Copyright © 2022 Texas Instruments Incorporated

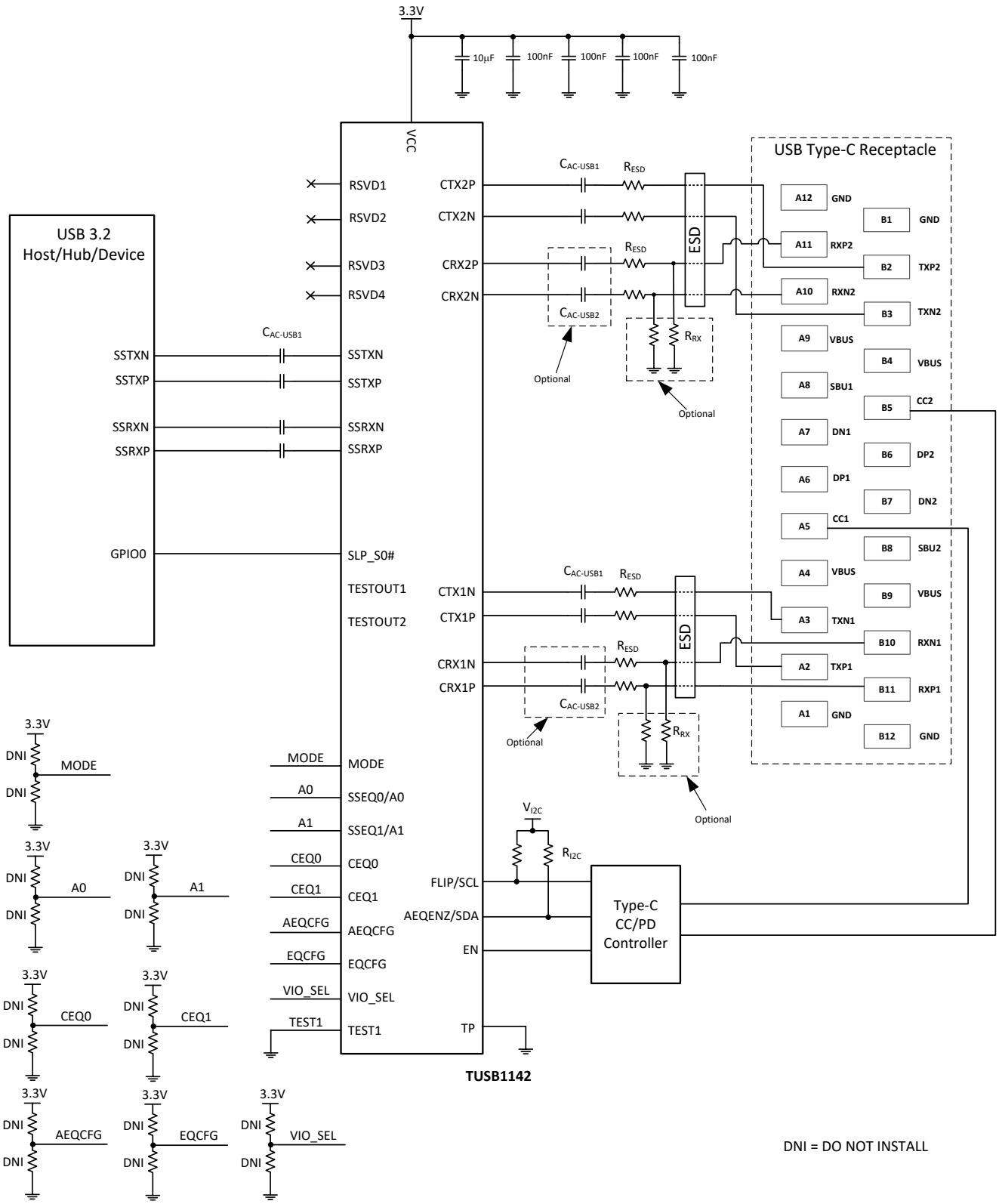

图 11-1. Application Circuit

11.1 USB SSTX Receiver Configuration

Configuring the TUSB1142 involves understanding the insertion loss (SDD21) of the pre-channel (X_{AB}). The TUSB1142's SSEQ[1:0] pins if pin-strap mode, or if I^2C mode, SSEQ1_SEL registers should be set to the level of the pre-channel insertion loss at 5 GHz. A good rule for FR4 trace insertion loss at 5 GHz is ≈-1 dB per inch. Using this rule, if the pre-channel for USB (X_{AB}) is 8-inches, the TUSB1142 SSEQ should be programmed to -8 dB.

11.2 USB CRX1/2 Receiver Configuration

11.2.1 Fixed Equalization

In Fixed EQ operation, a single EQ setting is used for all possible devices inserted into the USB receptacle (with or without an USB cable). It is recommended to set TUSB1142 CEQ[1:0] pins if pin-strap mode, or CEQ1_SEL and CEQ2_SEL if I^2C mode to about 4 db to 5 dB greater than loss of the post channel (X_{CD}). For example, if post channel is 0.5 inches, then assuming -1 dB per inch at 5 GHz, CEQ1_SEL and CEQ2_SEL should be programmed to 4.5 to 5.5 dB. It is recommended to perform USB 3.1 Rx JTOL long and short channel tests to optimize the setting. Depending of the USB 3.2 Host, a single EQ setting which satisfies both the long and short channel tests may not be possible. If this is the case, then it is recommended to use AEQ mode.

11.2.2 Full Adaptive Equalization

In Full AEQ mode, the TUSB1142 will determine the best settings regardless if the channel is short, long or somewhere in between. In pin-strap mode, the Full AEQ is enabled based on the state of AEQENZ pin. In I^2C mode, the Full AEQ feature is enabled by default. Full AEQ is enabled when AEQ_MODE = 1, 2, or 3, and AEQ_EN = 0x1.

11.2.3 Fast Adaptive Equalization

Fast Adaptive EQ will distinguish between a short and long channel and select a pre-determined EQ setting based on which channel is detected. Fast AEQ is available only I^2C mode. Fast AEQ is enabled when AEQ_MODE = 0 and AEQ_EN = 1.

The EQ setting used for short channel should be programmed into CEQ1_SEL and CEQ2_SEL registers. It is recommended to program these registers about 1 dB to 2 dB more than the loss of post channel (X_{CD}). For example, if post channel is 0.5 inches, then assuming -1dB insertion loss per inch at 5 GHz, CEQ1_SEL and CEQ2_SEL should be programmed to 1.5 to 2.5 dB. It is recommended to perform USB 3.2 Rx JTOL Short channel test to find the optimal short channel setting.

The EQ setting used for long channel should be programmed into LONG_CEQ1 and LONG_CEQ2. It is recommended to program these registers about 4 to 5 dB more than the loss of post channel (X_{CD}). For example, if post channel is 0.5 inches, then assuming -1 dB per inch at 5 GHz, LONG_CEQ1 and LONG_CEQ2 should be programmed to 4.5 to 5.5 dB. It is recommended to perform USB 3.2 Rx JTOL Long channel test to find the optimal long channel setting.

Copyright © 2022 Texas Instruments Incorporated

12 Application Curves

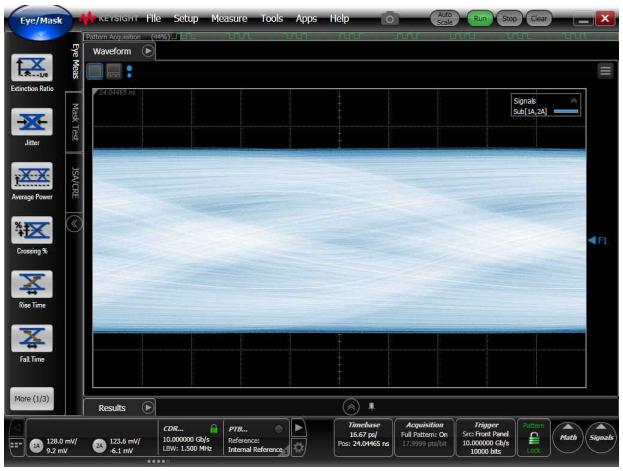

图 12-1. 10 Gbps Input Eye At SSTX After 12.5 dB at 5 GHz Pre-channel

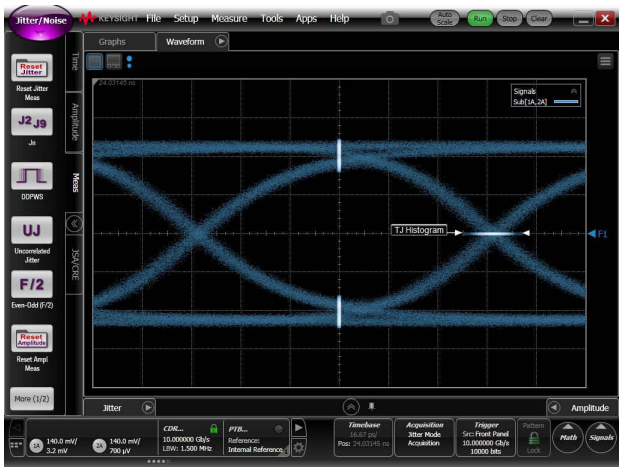

图 12-2. 10 Gbps Output Eye at CTX1 After 1.2 dB at 5 GHz Post-Channel

13 Power Supply Recommendations

The TUSB1142 is designed to operate with a 3.3 V power supply. Levels above those listed in the *Absolute Maximum Ratings* table should not be used. If using a higher voltage system power supply, a voltage regulator can be used to step down to 3.3 V. Decoupling capacitors should be used to reduce noise and improve power supply integrity. A 0.1 μF de-coupling capacitor should be used on each power pin. The de-coupling capacitor should be placed close as possible to the power pin. It is also recommended to have a single bulk capacitor of 1 μF to 10 μF.

14 Layout

14.1 Layout Guidelines

1. SSTXP/N, SSRXP/N, CRX1P/N, CRX2PN, CTX1P/N, and CTX2P/N pairs should be routed with controlled 90-Ω differential impedance (±10%).
2. There is no inter-pair length match requirement.
3. Keep away from other high speed signals.
4. Intra-pair routing (between P and N) should be kept to less than 5 mils.
5. Length matching should be near the location of mismatch.
6. Each pair should be separated at least by 3 times the signal trace width.
7. The use of bends in differential traces should be kept to a minimum. When bends are used, the number of left and right bends should be as equal as possible and the angle of the bend should be ⩾ 135 degrees. This will minimize any length mismatch caused by the bends and therefore minimize the impact bends have on EMI.
8. Route all differential pairs on the same of layer.
9. The number of vias should be kept to a minimum. It is recommended to keep the vias count to 2 or less.
10. Keep traces on layers adjacent to ground plane.
11. Do not route differential pairs over any plane split.
12. Adding test points will cause impedance discontinuity, and therefore, negatively impact signal performance. If test points are used, they should be placed in series and symmetrically. They must not be placed in a manner that causes a stub on the differential pair.
13. Highly recommended to have reference plane void under USB-C receptacle's super speed pins to minimize the capacitance effect of the receptacle.
14. Highly recommended to have reference plane void under the AC-coupling capacitances.

Copyright © 2022 Texas Instruments Incorporated

14.2 Layout Example

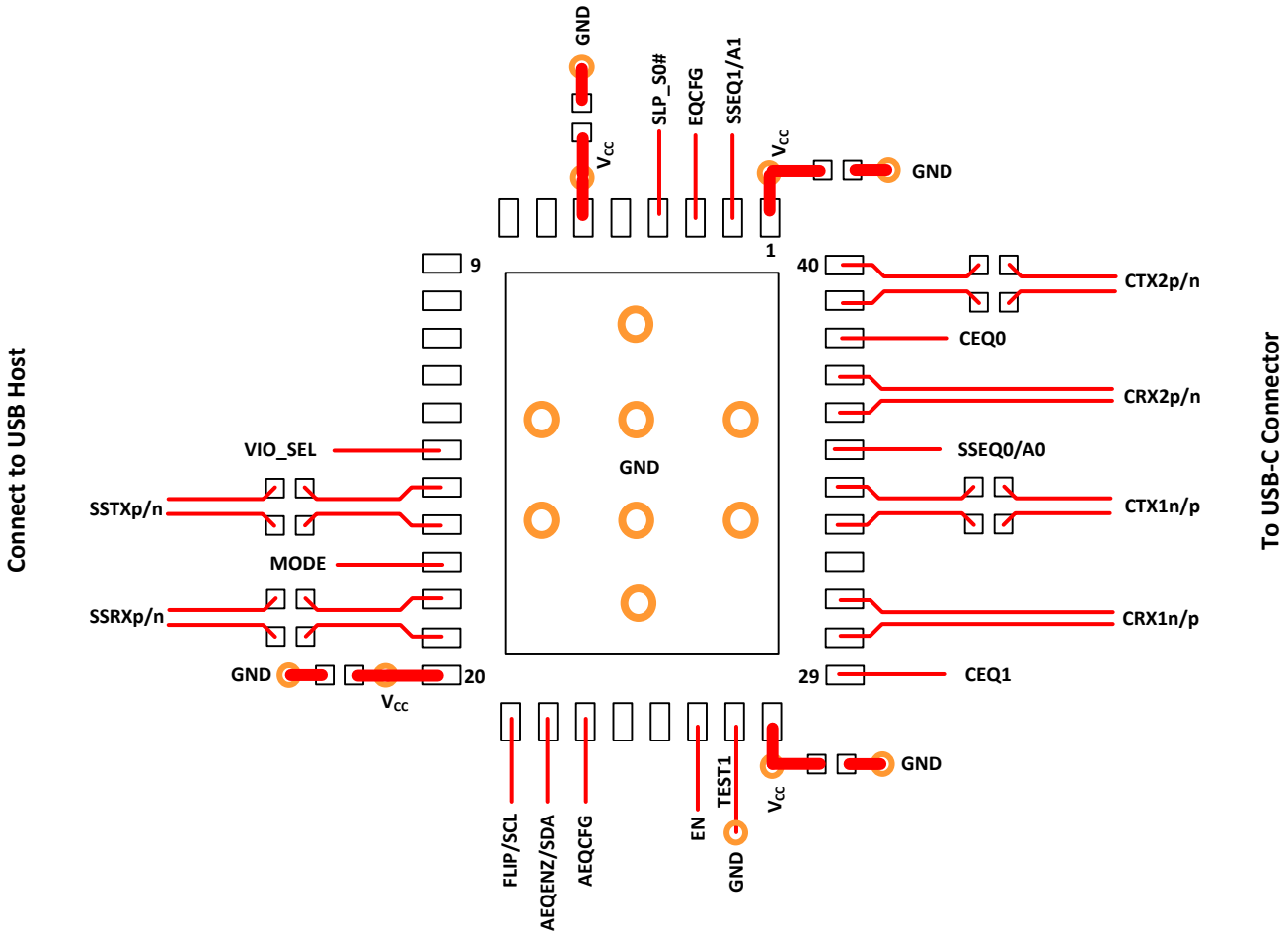

图 14-1. Layout Example

Copyright © 2022 Texas Instruments Incorporated

15 Device and Documentation Support

TI offers an extensive line of development tools. Tools and software to evaluate the performance of the device, generate code, and develop solutions are listed below.

15.1 接收文档更新通知

要接收文档更新通知，请导航至 ti.com 上的器件产品文件夹。点击*订阅更新* 进行注册，即可每周接收产品信息更改摘要。有关更改的详细信息，请查看任何已修订文档中包含的修订历史记录。

15.2 支持资源

TI E2E™ 支持论坛是工程师的重要参考资料，可直接从专家获得快速、经过验证的解答和设计帮助。搜索现有解答或提出自己的问题可获得所需的快速设计帮助。

链接的内容由各个贡献者“按原样”提供。这些内容并不构成 TI 技术规范，并且不一定反映 TI 的观点；请参阅 TI 的《使用条款》。

15.3 Trademarks

USB Type-C™ is a trademark of Universal Serial Bus Implementers Forum.
USB-C™ is a trademark of Universal Serial Bus Implementers Forum.
TI E2E™ is a trademark of Texas Instruments.
所有商标均为其各自所有者的财产。

15.4 Electrostatic Discharge Caution

This integrated circuit can be damaged by ESD. Texas Instruments recommends that all integrated circuits be handled with appropriate precautions. Failure to observe proper handling and installation procedures can cause damage.

ESD damage can range from subtle performance degradation to complete device failure. Precision integrated circuits may be more susceptible to damage because very small parametric changes could cause the device not to meet its published specifications.

15.5 术语表

TI 术语表	本术语表列出并解释了术语、首字母缩略词和定义。

16 Mechanical, Packaging, and Orderable Information

The following pages include mechanical, packaging, and orderable information. This information is the most current data available for the designated devices. This data is subject to change without notice and revision of this document. For browser-based versions of this data sheet, refer to the left-hand navigation.

PACKAGING INFORMATION

Orderable Device	Status (1)	Package Type	Package Drawing	Pins	Package Qty	Eco Plan (2)	Lead finish/ Ball material (6)	MSL Peak Temp (3)	Op Temp (°C)	Device Marking (4/5)	Samples
TUSB1142IRNQR	ACTIVE	WQFN	RNQ	40	3000	RoHS & Green	NIPDAU	Level-2-260C-1 YEAR	-40 to 85	TSB04	Samples
TUSB1142IRNQT	ACTIVE	WQFN	RNQ	40	250	RoHS & Green	NIPDAU	Level-2-260C-1 YEAR	-40 to 85	TSB04	Samples
TUSB1142RNQR	ACTIVE	WQFN	RNQ	40	3000	RoHS & Green	NIPDAU	Level-2-260C-1 YEAR	0 to 70	TSB04	Samples
TUSB1142RNQT	ACTIVE	WQFN	RNQ	40	250	RoHS & Green	NIPDAU	Level-2-260C-1 YEAR	0 to 70	TSB04	Samples

(1) The marketing status values are defined as follows:
ACTIVE: Product device recommended for new designs.
LIFEBUY: TI has announced that the device will be discontinued, and a lifetime-buy period is in effect.
NRND: Not recommended for new designs. Device is in production to support existing customers, but TI does not recommend using this part in a new design.
PREVIEW: Device has been announced but is not in production. Samples may or may not be available.
OBSOLETE: TI has discontinued the production of the device.

(2) **RoHS:** TI defines "RoHS" to mean semiconductor products that are compliant with the current EU RoHS requirements for all 10 RoHS substances, including the requirement that RoHS substance do not exceed 0.1% by weight in homogeneous materials. Where designed to be soldered at high temperatures, "RoHS" products are suitable for use in specified lead-free processes. TI may reference these types of products as "Pb-Free".
RoHS Exempt: TI defines "RoHS Exempt" to mean products that contain lead but are compliant with EU RoHS pursuant to a specific EU RoHS exemption.
Green: TI defines "Green" to mean the content of Chlorine (Cl) and Bromine (Br) based flame retardants meet JS709B low halogen requirements of <=1000ppm threshold. Antimony trioxide based flame retardants must also meet the <=1000ppm threshold requirement.

(3) MSL, Peak Temp. - The Moisture Sensitivity Level rating according to the JEDEC industry standard classifications, and peak solder temperature.

(4) There may be additional marking, which relates to the logo, the lot trace code information, or the environmental category on the device.

(5) Multiple Device Markings will be inside parentheses. Only one Device Marking contained in parentheses and separated by a "~" will appear on a device. If a line is indented then it is a continuation of the previous line and the two combined represent the entire Device Marking for that device.

(6) Lead finish/Ball material - Orderable Devices may have multiple material finish options. Finish options are separated by a vertical ruled line. Lead finish/Ball material values may wrap to two lines if the finish value exceeds the maximum column width.

Important Information and Disclaimer: The information provided on this page represents TI's knowledge and belief as of the date that it is provided. TI bases its knowledge and belief on information provided by third parties, and makes no representation or warranty as to the accuracy of such information. Efforts are underway to better integrate information from third parties. TI has taken and

continues to take reasonable steps to provide representative and accurate information but may not have conducted destructive testing or chemical analysis on incoming materials and chemicals.
TI and TI suppliers consider certain information to be proprietary, and thus CAS numbers and other limited information may not be available for release.

In no event shall TI's liability arising out of such information exceed the total purchase price of the TI part(s) at issue in this document sold by TI to Customer on an annual basis.

PACKAGE OUTLINE

RNQ0040A

WQFN - 0.8 mm max height

PLASTIC QUAD FLATPACK - NO LEAD

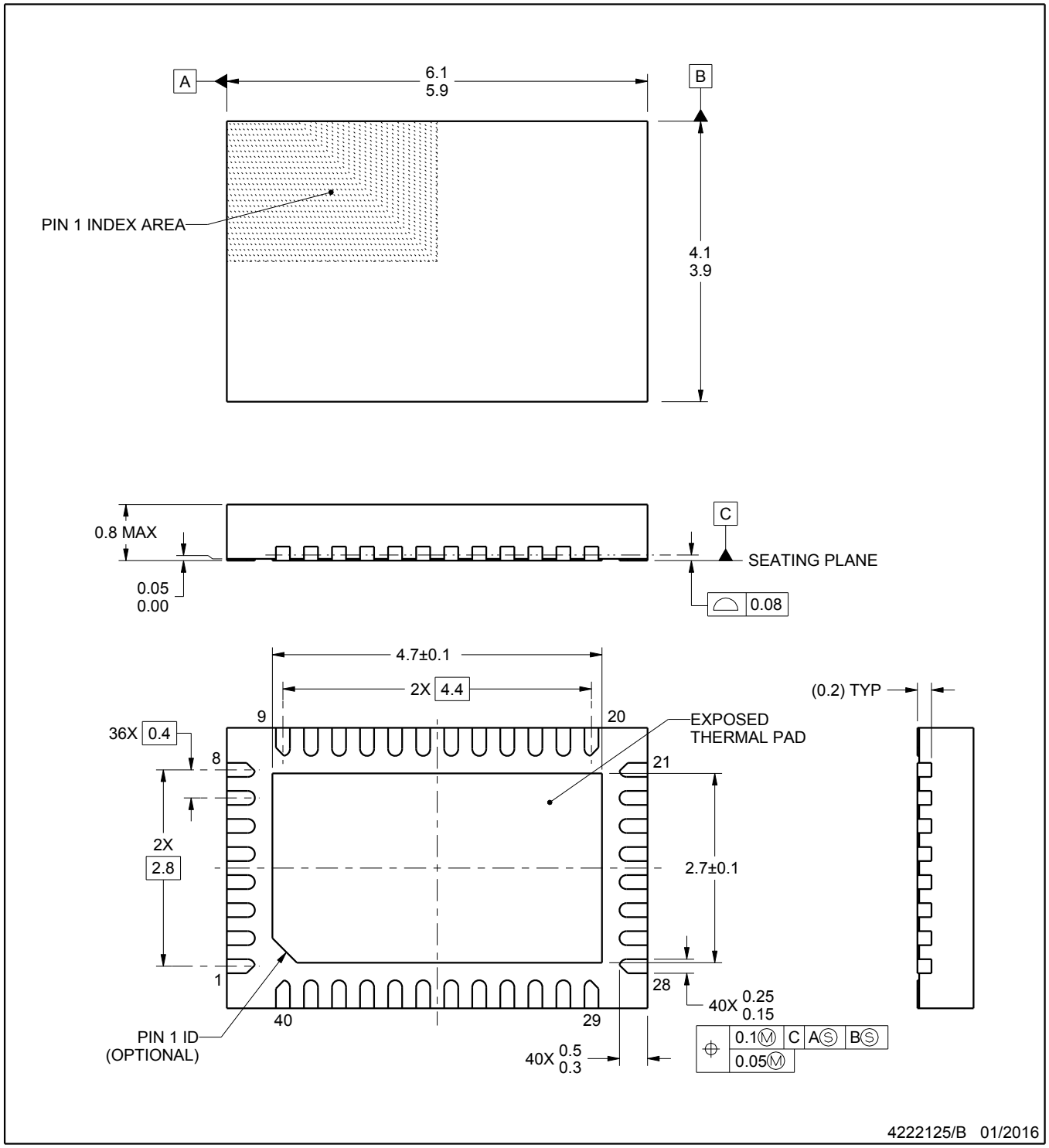

NOTES:

1. All linear dimensions are in millimeters. Any dimensions in parenthesis are for reference only. Dimensioning and tolerancing per ASME Y14.5M.
2. This drawing is subject to change without notice.
3. The package thermal pad must be soldered to the printed circuit board for thermal and mechanical performance.

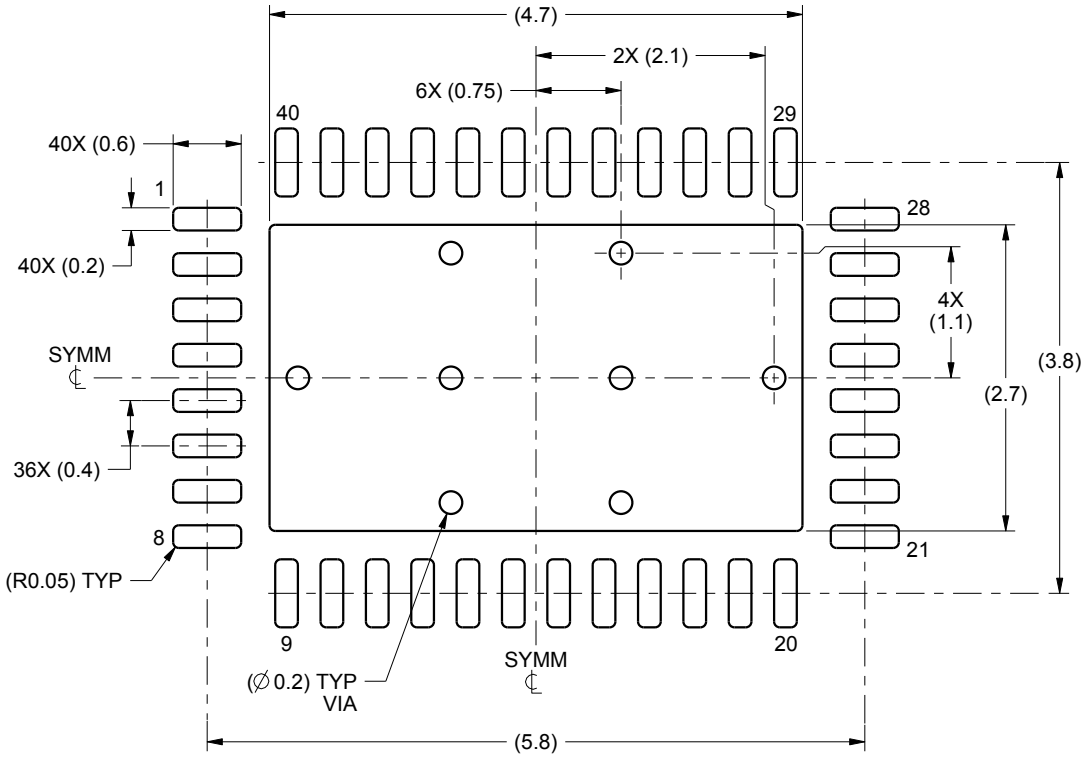

LAND PATTERN EXAMPLE
SCALE:15X

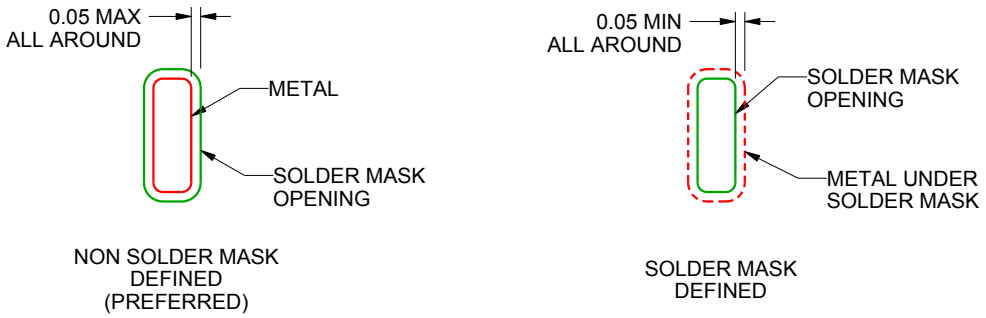

SOLDER MASK DETAILS

4222125/B 01/2016

NOTES: (continued)

4. This package is designed to be soldered to a thermal pad on the board. For more information, see Texas Instruments literature number SLUA271 (www.ti.com/lit/slua271).

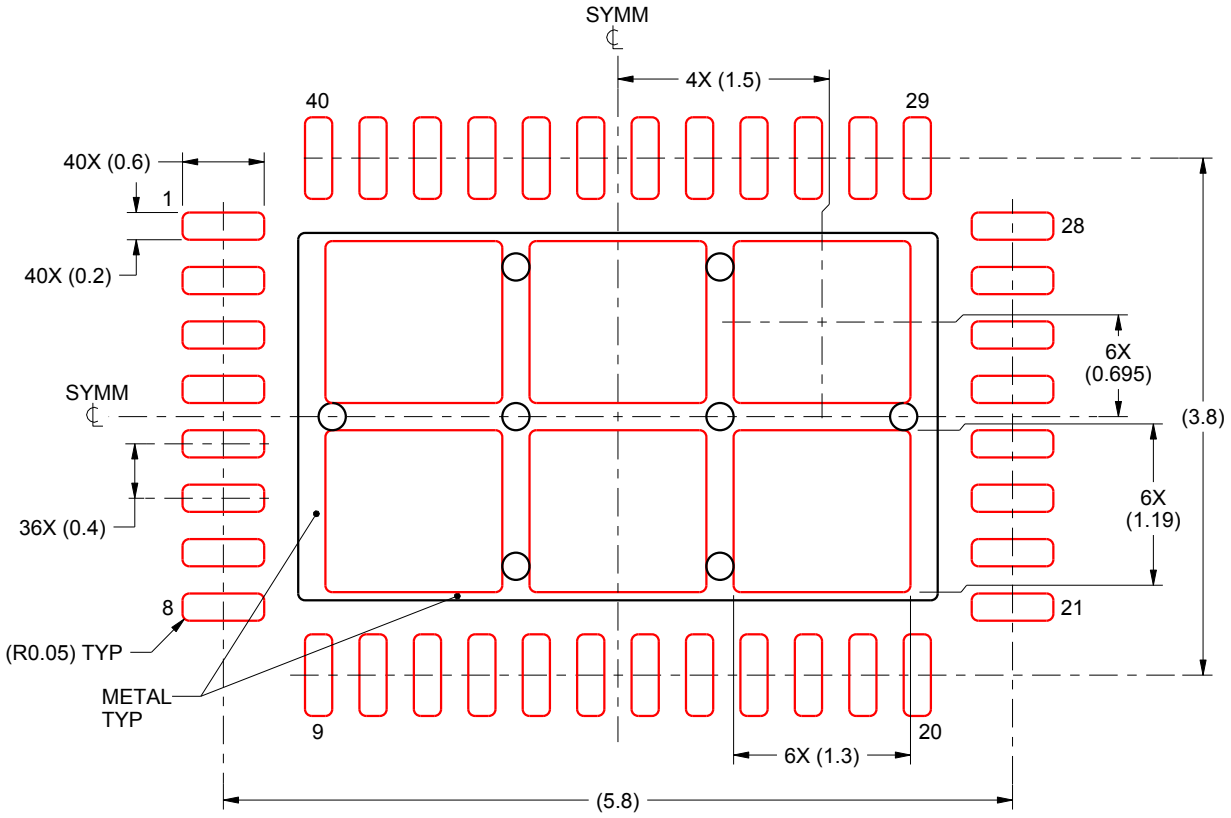

SOLDER PASTE EXAMPLE
BASED ON 0.1 mm THICK STENCIL

EXPOSED PAD
73% PRINTED SOLDER COVERAGE BY AREA
SCALE:18X

4222125/B 01/2016

NOTES: (continued)

5. Laser cutting apertures with trapezoidal walls and rounded corners may offer better paste release. IPC-7525 may have alternate design recommendations.

重要声明和免责声明

TI“按原样”提供技术和可靠性数据（包括数据表）、设计资源（包括参考设计）、应用或其他设计建议、网络工具、安全信息和其他资源，不保证没有瑕疵且不做出任何明示或暗示的担保，包括但不限于对适销性、某特定用途方面的适用性或不侵犯任何第三方知识产权的暗示担保。

这些资源可供使用 TI 产品进行设计的熟练开发人员使用。您将自行承担以下全部责任：(1) 针对您的应用选择合适的 TI 产品，(2) 设计、验证并测试您的应用，(3) 确保您的应用满足相应标准以及任何其他功能安全、信息安全、监管或其他要求。

这些资源如有变更，恕不另行通知。TI 授权您仅可将这些资源用于研发本资源所述的 TI 产品的应用。严禁对这些资源进行其他复制或展示。您无权使用任何其他 TI 知识产权或任何第三方知识产权。您应全额赔偿因在这些资源的使用中对 TI 及其代表造成的任何索赔、损害、成本、损失和债务，TI 对此概不负责。

TI 提供的产品受 TI 的销售条款或 ti.com 上其他适用条款/TI 产品随附的其他适用条款的约束。TI 提供这些资源并不会扩展或以其他方式更改 TI 针对 TI 产品发布的适用的担保或担保免责声明。

TI 反对并拒绝您可能提出的任何其他或不同的条款。

邮寄地址：Texas Instruments, Post Office Box 655303, Dallas, Texas 75265
Copyright © 2022，德州仪器 (TI) 公司