µA78Mxx Positive-Voltage Regulators

1 Features

- 3-Terminal Regulators
- Output Current up to 500 mA
- No External Components
- Internal Thermal-Overload Protection
- High Power-Dissipation Capability
- Internal Short-Circuit Current Limiting
- Output Transistor Safe-Area Compensation

2 Applications

- On-Card Regulation
- Portable Devices
- Computing & Servers
- Telecommunications

3 Description

This series of fixed-voltage integrated-circuit voltage regulators is designed for a wide range of applications. The applications include on-card regulation for elimination of noise and distribution problems associated with single-point regulation. Each of these regulators can deliver up to 500 mA of output current. The internal current-limiting and thermal-shutdown features of these regulators essentially make them immune to overload. In addition to use as fixed-voltage regulators, these devices can be used with external components to obtain adjustable output voltages and currents and also as the power-pass element in precision regulators.

Device Information(1)

PART NUMBER	PACKAGE	BODY SIZE (NOM)
UA78Mxx	SOT-223 (3)	6.50 mm x 3.50 mm
	TO-220 (3)	10.16 mm x 8.82 mm
	TO-252 (3)	6.60 mm x 6.10 mm

(1) For all available packages, see the orderable addendum at the end of the data sheet.

4 Simplified Schematic

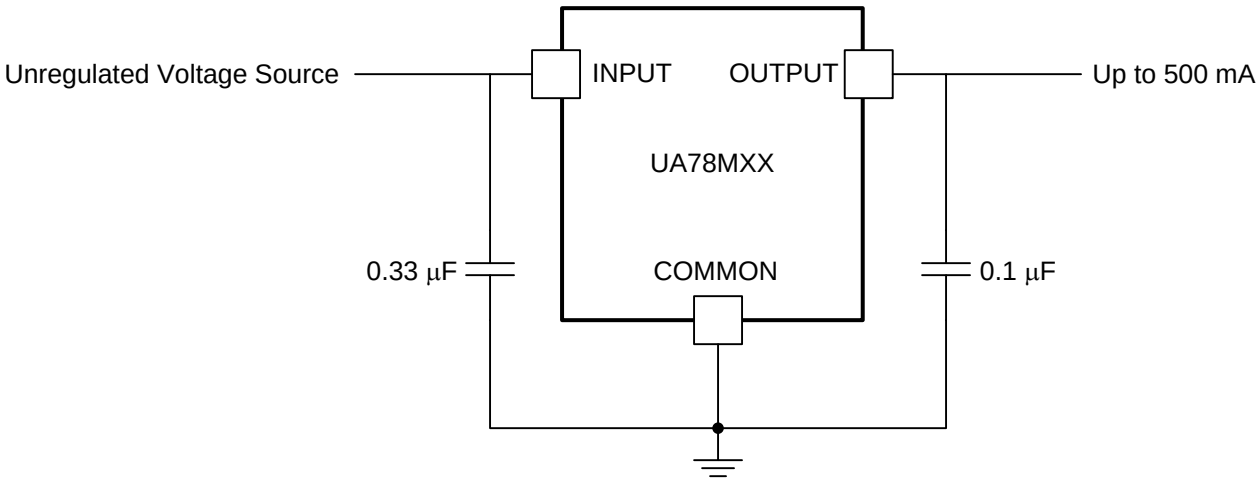

An IMPORTANT NOTICE at the end of this data sheet addresses availability, warranty, changes, use in safety-critical applications, intellectual property matters and other important disclaimers. PRODUCTION DATA.

Table of Contents

1 Features ... 1
2 Applications ... 1
3 Description ... 1
4 Simplified Schematic ... 1
5 Revision History ... 2
6 Pin Configuration and Functions ... 3
7 Specifications ... 4
7.1 Absolute Maximum Ratings ... 4
7.2 ESD Ratings ... 4
7.3 Recommended Operating Conditions ... 4
7.4 Thermal Information ... 4
7.5 Electrical Characteristics — uA78M33C ... 5
7.6 Electrical Characteristics — uA78M33I ... 5
7.7 Electrical Characteristics — uA78M05C ... 6
7.8 Electrical Characteristics — uA78M05I ... 6
7.9 Electrical Characteristics — uA78M06C ... 7
7.10 Electrical Characteristics — uA78M08C ... 7
7.11 Electrical Characteristics — uA78M09C ... 8
7.12 Electrical Characteristics — uA78M10C ... 8
7.13 Electrical Characteristics — uA78M12C ... 9
7.14 Typical Characteristics ... 9
8 Detailed Description ... 10
8.1 Overview ... 10
8.2 Functional Block Diagram ... 10
8.3 Feature Description ... 10
8.4 Device Functional Modes ... 10
9 Application and Implementation ... 11
9.1 Application Information ... 11
9.2 Typical Application ... 11
10 Power Supply Recommendations ... 13
11 Layout ... 13
11.1 Layout Guidelines ... 13
11.2 Layout Example ... 13
12 Device and Documentation Support ... 14
12.1 Related Links ... 14
12.2 Trademarks ... 14
12.3 Electrostatic Discharge Caution ... 14
12.4 Glossary ... 14
13 Mechanical, Packaging, and Orderable Information ... 14

5 Revision History

Changes from Revision S (May 2013) to Revision T	Page
• Added *Applications*, *Device Information* table, *Pin Functions* table, *ESD Ratings* table, *Thermal Information* table, *Typical Characteristics*, *Feature Description* section, *Device Functional Modes*, *Application and Implementation* section, *Power Supply Recommendations* section, *Layout* section, *Device and Documentation Support* section, and *Mechanical, Packaging, and Orderable Information* section.	1

Changes from Revision R (February 2013) to Revision S	Page
• Removed Ordering Information table.	1

Changes from Revision Q (April 2010) to Revision R	Page
• Removed obsolete part information from document.	1

Copyright © 1976–2015, Texas Instruments Incorporated

6 Pin Configuration and Functions

KC (TO-220) PACKAGE
(TOP VIEW)

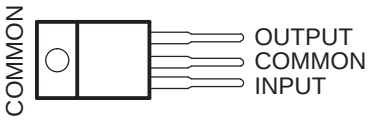

KCS (TO-220) PACKAGE
(TOP VIEW)

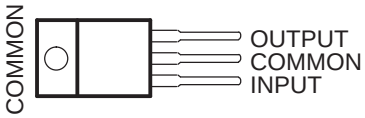

KVU (TO-252) PACKAGE
(TOP VIEW)

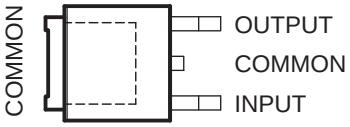

KTP (PowerFLEX /TO-252*) PACKAGE
(TOP VIEW)

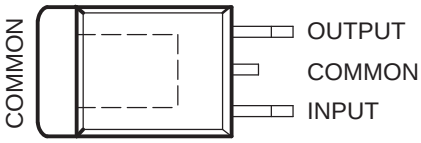

* Complies with JEDEC TO-252, variation AC

DCY (SOT-223) PACKAGE
(TOP VIEW)

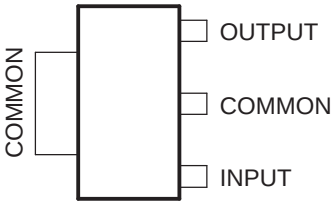

Pin Functions

PIN		TYPE	DESCRIPTION
NAME	NO.		
COMMON	2	—	Ground
INPUT	1	I	Supply Input
OUTPUT	3	O	Voltage Output

7 Specifications

7.1 Absolute Maximum Ratings

over virtual junction temperature range (unless otherwise noted) (1)

		MIN	MAX	UNIT
V_I	Input voltage		35	V
T_J	Operating virtual junction temperature		150	°C
T_{stg}	Storage temperature range	–65	150	°C

(1) Stresses beyond those listed under *Absolute Maximum Ratings* may cause permanent damage to the device. These are stress ratings only, and functional operation of the device at these or any other conditions beyond those indicated under *Recommended Operating Conditions* is not implied. Exposure to absolute-maximum-rated conditions for extended periods may affect device reliability.

7.2 ESD Ratings

			VALUE	UNIT
$V_{(ESD)}$	Electrostatic discharge	Human body model (HBM), per ANSI/ESDA/JEDEC JS-001, all pins (1)	2500	V
		Charged device model (CDM), per JEDEC specification JESD22-C101, all pins (2)	2000	

(1) JEDEC document JEP155 states that 500-V HBM allows safe manufacturing with a standard ESD control process.
(2) JEDEC document JEP157 states that 250-V CDM allows safe manufacturing with a standard ESD control process.

7.3 Recommended Operating Conditions

			MIN	MAX	UNIT
V_I	Input voltage	uA78M33	5.3	25	V
		uA78M05	7	25	
		uA78M06	8	25	
		uA78M08	10.5	25	
		uA78M09	11.5	26	
		uA78M10	12.5	28	
		uA78M12	14.5	30	
		uA78M15	17.5	30	
I_O	Output current			500	mA
T_J	Operating virtual junction temperature	uA78MxxC	0	125	°C
		uA78MxxI	–40	125	

7.4 Thermal Information

THERMAL METRIC (1)		UA78Mxx					UNIT
		DCY	KC	KCS	KTP	KVU	
		3 PINS	3 PINS	3 PINS	3 PINS	3 PINS	
$R_{\theta JA}$	Junction-to-ambient thermal resistance	53	19	19	28	30.3	°C/W
$R_{\theta JC(top)}$	Junction-to-case (top) thermal resistance	30.6	17	17	19	—	
$R_{\theta JC(bot)}$	Junction-to-case (bottom) thermal resistance	—	3	3	1.4	—	

(1) For more information about traditional and new thermal metrics, see the *IC Package Thermal Metrics* application report, SPRA953.

Copyright © 1976–2015, Texas Instruments Incorporated

7.5 Electrical Characteristics — uA78M33C

at specified virtual junction temperature, V_I = 8 V, I_O = 350 mA, T_J = 25°C (unless otherwise noted)

PARAMETER0	TEST CONDITIONS(1)		uA78M33C			UNIT
			MIN	TYP	MAX	
Output voltage(2)	I_O = 5 mA to 350 mA, V_I = 8 V to 20 V		3.2	3.3	3.4	V
		T_J = 0°C to 125°C	3.1	3.3	3.5	
Input voltage regulation	I_O = 200 mA	V_I = 5.3 V to 25 V		9	100	mV
		V_I = 8 V to 25 V		3	50	
Ripple rejection	V_I = 8 V to 18 V, f = 120 Hz	I_O = 100 mA, T_J = 0°C to 125°C	62			dB
		I_O = 300 mA	62	80		
Output voltage regulation	V_I = 8 V,	I_O = 5 mA to 500 mA		20	100	mV
Temperature coefficient of output voltage	I_O = 5 mA,	T_J = 0°C to 125°C		–1		mV/°C
Output noise voltage	f = 10 Hz to 100 kHz			40	200	µV
Dropout voltage				2		V
Bias current				4.5	6	mA
Bias current change	I_O = 200 mA, V_I = 8 V to 25 V,	T_J = 0°C to 125°C			0.8	mA
	I_O = 5 mA to 350 mA,	T_J = 0°C to 125°C			0.5	
Short-circuit output current	V_I = 35 V			300		mA
Peak output current				700		mA

(1) All characteristics are measured with a 0.33-µF capacitor across the input and a 0.1-µF capacitor across the output. Pulse-testing techniques maintain T_J as close to T_A as possible. Thermal effects must be taken into account separately.
(2) This specification applies only for dc power dissipation permitted by *Absolute Maximum Ratings*.

7.6 Electrical Characteristics — uA78M33I

at specified virtual junction temperature, V_I = 8 V, I_O = 350 mA, T_J = 25°C (unless otherwise noted)

PARAMETER	TEST CONDITIONS(1)		uA78M33I			UNIT
			MIN	TYP	MAX	
Output voltage(2)	I_O = 5 mA to 350 mA, V_I = 8 V to 20 V		3.2	3.3	3.4	V
		T_J = –40°C to 125°C	3.1	3.3	3.5	
Input voltage regulation	I_O = 200 mA	V_I = 5.3 V to 25 V		9	100	mV
		V_I = 8 V to 25 V		3	50	
Ripple rejection	V_I = 8 V to 18 V, f = 120 Hz	I_O = 100 mA, T_J = –40°C to 125°C	62			dB
		I_O = 300 mA	62	80		
Output voltage regulation	V_I = 8 V,	I_O = 5 mA to 500 mA		20	100	mV
Temperature coefficient of output voltage	I_O = 5 mA,	T_J = –40°C to 125°C		–1		mV/°C
Output noise voltage	f = 10 Hz to 100 kHz			40	200	µV
Dropout voltage				2		V
Bias current				4.5	6	mA
Bias current change	I_O = 200 mA, V_I = 8 V to 25 V,	T_J = –40°C to 125°C			0.8	mA
	I_O = 5 mA to 350 mA,	T_J = –40°C to 125°C			0.5	
Short-circuit output current	V_I = 35 V			300		mA
Peak output current				700		mA

(1) All characteristics are measured with a 0.33-µF capacitor across the input and a 0.1-µF capacitor across the output. Pulse-testing techniques maintain T_J as close to T_A as possible. Thermal effects must be taken into account separately.
(2) This specification applies only for dc power dissipation permitted by *Absolute Maximum Ratings*.

Copyright © 1976–2015, Texas Instruments Incorporated

7.7 Electrical Characteristics — uA78M05C

at specified virtual junction temperature, V_I = 10 V, I_O = 350 mA, T_J = 25°C (unless otherwise noted)

PARAMETER	TEST CONDITIONS(1)		uA78M05C			UNIT
			MIN	TYP	MAX	
Output voltage(2)	I_O = 5 mA to 350 mA, V_I = 7 V to 20 V		4.8	5	5.2	V
		T_J = 0°C to 125°C	4.75		5.25	
Input voltage regulation	I_O = 200 mA	V_I = 7 V to 25 V		3	100	mV
		V_I = 8 V to 25 V		1	50	
Ripple rejection	V_I = 8 V to 18 V, f = 120 Hz	I_O = 100 mA, T_J = 0°C to 125°C	62			dB
		I_O = 300 mA	62	80		
Output voltage regulation	I_O = 5 mA to 500 mA			20	100	mV
	I_O = 5 mA to 200 mA			10	50	
Temperature coefficient of output voltage	I_O = 5 mA,	T_J = 0°C to 125°C		–1		mV/°C
Output noise voltage	f = 10 Hz to 100 kHz			40	200	μV
Dropout voltage				2		V
Bias current				4.5	6	mA
Bias current change	I_O = 200 mA, V_I = 8 V to 25 V, T_J = 0°C to 125°C				0.8	mA
	I_O = 5 mA to 350 mA,	T_J = 0°C to 125°C			0.5	
Short-circuit output current	V_I = 35 V			300		mA
Peak output current				0.7		A

(1) All characteristics are measured with a 0.33-μF capacitor across the input and a 0.1-μF capacitor across the output. Pulse-testing techniques maintain T_J as close to T_A as possible. Thermal effects must be taken into account separately.
(2) This specification applies only for dc power dissipation permitted by *Absolute Maximum Ratings*.

7.8 Electrical Characteristics — uA78M05I

at specified virtual junction temperature, V_I = 10 V, I_O = 350 mA, T_J = 25°C (unless otherwise noted)

PARAMETER	TEST CONDITIONS(1)		uA78M05I			UNIT
			MIN	TYP	MAX	
Output voltage(2)	I_O = 5 mA to 350 mA, V_I = 7 V to 20 V		4.8	5	5.2	V
		T_J = –40°C to 125°C	4.75		5.25	
Input voltage regulation	I_O = 200 mA	V_I = 7 V to 25 V		3	100	mV
		V_I = 8 V to 25 V		1	50	
Ripple rejection	V_I = 8 V to 18 V, f = 120 Hz	I_O = 100 mA, T_J = –40°C to 125°C	62			dB
		I_O = 300 mA	62	80		
Output voltage regulation	I_O = 5 mA to 500 mA			20	100	mV
	I_O = 5 mA to 200 mA			10	50	
Temperature coefficient of output voltage	I_O = 5 mA,	T_J = –40°C to 125°C		–1		mV/°C
Output noise voltage	f = 10 Hz to 100 kHz			40	200	μV
Dropout voltage				2		V
Bias current				4.5	6	mA
Bias current change	I_O = 200 mA, V_I = 8 V to 25 V,	T_J = –40°C to 125°C			0.8	mA
	I_O = 5 mA to 350 mA,	T_J = –40°C to 125°C			0.5	
Short-circuit output current	V_I = 35 V			300		mA
Peak output current				0.7		A

(1) All characteristics are measured with a 0.33-μF capacitor across the input and a 0.1-μF capacitor across the output. Pulse-testing techniques maintain T_J as close to T_A as possible. Thermal effects must be taken into account separately.
(2) This specification applies only for dc power dissipation permitted by *Absolute Maximum Ratings*.

Copyright © 1976–2015, Texas Instruments Incorporated

7.9 Electrical Characteristics — uA78M06C

at specified virtual junction temperature, V_I = 11 V, I_O = 350 mA, T_J = 25°C (unless otherwise noted)

PARAMETER	TEST CONDITIONS[1]			uA78M06C MIN	uA78M06C TYP	uA78M06C MAX	UNIT
Output voltage[2]	I_O = 5 mA to 350 mA,	V_I = 8 V to 21 V		5.75	6	6.25	V
			T_J = 0°C to 125°C	5.7		6.3	
Input voltage regulation	I_O = 200 mA	V_I = 8 V to 25 V			5	100	mV
		V_I = 9 V to 25 V			1.5	50	
Ripple rejection	V_I = 8 V to 18 V,	f = 120 Hz	I_O = 100 mA, T_J = 0°C to 125°C	59			dB
			I_O = 300 mA	59	80		
Output voltage regulation	I_O = 5 mA to 500 mA				20	120	mV
	I_O = 5 mA to 200 mA				10	60	
Temperature coefficient of output voltage	I_O = 5 mA,	T_J = 0°C to 125°C			–1		mV/°C
Output noise voltage	f = 10 Hz to 100 kHz				45		μV
Dropout voltage					2		V
Bias current					4.5	6	mA
Bias current change	V_I = 9 V to 25 V,	I_O = 200 mA,	T_J = 0°C to 125°C			0.8	mA
	I_O = 5 mA to 350 mA,	T_J = 0°C to 125°C				0.5	
Short-circuit output current	V_I = 35 V				270		mA
Peak output current					0.7		A

(1) All characteristics are measured with a 0.33-μF capacitor across the input and a 0.1-μF capacitor across the output. Pulse-testing techniques maintain T_J as close to T_A as possible. Thermal effects must be taken into account separately.
(2) This specification applies only for dc power dissipation permitted by *Absolute Maximum Ratings*.

7.10 Electrical Characteristics — uA78M08C

at specified virtual junction temperature, V_I = 14 V, I_O = 350 mA, T_J = 25°C (unless otherwise noted)

PARAMETER	TEST CONDITIONS[1]			uA78M08C MIN	uA78M08C TYP	uA78M08C MAX	UNIT
Output voltage[2]	V_I = 10.5 V to 23 V,	I_O = 5 mA to 350 mA		7.7	8	8.3	V
			T_J = 0°C to 125°C	7.6		8.4	
Input voltage regulation	I_O = 200 mA	V_I = 10.5 V to 25 V			6	100	mV
		V_I = 11 V to 25 V			2	50	
Ripple rejection	V_I = 11 V to 21.5 V, f = 120 Hz	I_O = 100 mA,	T_J = 0°C to 125°C	56			dB
		I_O = 300 mA		56	80		
Output voltage regulation	I_O = 5 mA to 500 mA				25	160	mV
	I_O = 5 mA to 200 mA				10	80	
Temperature coefficient of output voltage	I_O = 5 mA,	T_J = 0°C to 125°C			–1		mV/°C
Output noise voltage	f = 10 Hz to 100 kHz				52		μV
Dropout voltage					2		V
Bias current					4.6	6	mA
Bias current change	V_I = 10.5 V to 25 V,	I_O = 200 mA,	T_J = 0°C to 125°C			0.8	mA
	I_O = 5 mA to 350 mA,	T_J = 0°C to 125°C				0.5	
Short-circuit output current	V_I = 35 V				250		mA
Peak output current					0.7		A

(1) All characteristics are measured with a 0.33-μF capacitor across the input and a 0.1-μF capacitor across the output. Pulse-testing techniques maintain T_J as close to T_A as possible. Thermal effects must be taken into account separately.
(2) This specification applies only for dc power dissipation permitted by *Absolute Maximum Ratings*.

Copyright © 1976–2015, Texas Instruments Incorporated

7.11 Electrical Characteristics — uA78M09C

at specified virtual junction temperature, V_I = 16 V, I_O = 350 mA, T_J = 25°C (unless otherwise noted)

PARAMETER	TEST CONDITIONS[1]			uA78M09C			UNIT
				MIN	TYP	MAX	
Output voltage[2]	V_I = 11.5 V to 24 V,	I_O = 5 mA to 350 mA		8.6	9	9.4	V
			T_J = 0°C to 125°C	8.5		9.5	
Input voltage regulation	I_O = 200 mA	V_I = 11.5 V to 26 V			6	100	mV
		V_I = 12 V to 26 V			2	50	
Ripple rejection	V_I = 13 V to 23 V, f = 120 Hz	I_O = 100 mA,	T_J = 0°C to 125°C	56			dB
		I_O = 300 mA		56	80		
Output voltage regulation	I_O = 5 mA to 500 mA				25	180	mV
	I_O = 5 mA to 200 mA				10	90	
Temperature coefficient of output voltage	I_O = 5 mA,	T_J = 0°C to 125°C			–1		mV/°C
Output noise voltage	f = 10 Hz to 100 kHz				58		μV
Dropout voltage					2		V
Bias current					4.6	6	mA
Bias current change	V_I = 11.5 V to 26 V,	I_O = 200 mA,	T_J = 0°C to 125°C			0.8	mA
	I_O = 5 mA to 350 mA,	T_J = 0°C to 125°C				0.5	
Short-circuit output current	V_I = 35 V				250		mA
Peak output current					0.7		A

(1) All characteristics are measured with a 0.33-μF capacitor across the input and a 0.1-μF capacitor across the output. Pulse-testing techniques maintain T_J as close to T_A as possible. Thermal effects must be taken into account separately.
(2) This specification applies only for dc power dissipation permitted by *Absolute Maximum Ratings*.

7.12 Electrical Characteristics — uA78M10C

at specified virtual junction temperature, V_I = 17 V, I_O = 350 mA, T_J = 25°C (unless otherwise noted)

PARAMETER	TEST CONDITIONS[1]			uA78M10C			UNIT
				MIN	TYP	MAX	
Output voltage[2]	V_I = 12.5 V to 25 V,	I_O = 5 mA to 350 mA		9.6	10	10.4	V
			T_J = 0°C to 125°C	9.5		10.5	
Input voltage regulation	I_O = 200 mA	V_I = 12.5 V to 28 V			7	100	mV
		V_I = 14 V to 28 V			2	50	
Ripple rejection	V_I = 15 V to 25 V, f = 120 Hz	I_O = 100 mA,	T_J = 0°C to 125°C	59			dB
		I_O = 300 mA		55	80		
Output voltage regulation	I_O = 5 mA to 500 mA				25	200	mV
	I_O = 5 mA to 200 mA				10	100	
Temperature coefficient of output voltage	I_O = 5 mA,	T_J = 0°C to 125°C			–1		mV/°C
Output noise voltage	f = 10 Hz to 100 kHz				64		μV
Dropout voltage					2		V
Bias current					4.7	6	mA
Bias current change	V_I = 12.5 V to 28 V,	I_O = 200 mA,	T_J = 0°C to 125°C			0.8	mA
	I_O = 5 mA to 350 mA,	T_J = 0°C to 125°C				0.5	
Short-circuit output current	V_I = 35 V				245		mA
Peak output current					0.7		A

(1) All characteristics are measured with a 0.33-μF capacitor across the input and a 0.1-μF capacitor across the output. Pulse-testing techniques maintain T_J as close to T_A as possible. Thermal effects must be taken into account separately.
(2) This specification applies only for dc power dissipation permitted by *Absolute Maximum Ratings*.

Copyright © 1976–2015, Texas Instruments Incorporated

7.13 Electrical Characteristics — uA78M12C

at specified virtual junction temperature, V_I = 19 V, I_O = 350 mA, T_J = 25°C (unless otherwise noted)

PARAMETER	TEST CONDITIONS[1]			uA78M12C			UNIT
				MIN	TYP	MAX	
Output voltage[2]	V_I = 14.5 V to 27 V,	I_O = 5 mA to 350 mA		11.5	12	12.5	V
			T_J = 0°C to 125°C	11.4		12.6	
Input voltage regulation	I_O = 200 mA	V_I = 14.5 V to 30 V			8	100	mV
		V_I = 16 V to 30 V			2	50	
Ripple rejection	V_I = 15 V to 25 V, f = 120 Hz	I_O = 100 mA,	T_J = 0°C to 125°C	55			dB
		I_O = 300 mA		55	80		
Output voltage regulation	I_O = 5 mA to 500 mA				25	240	mV
	I_O = 5 mA to 200 mA				10	120	
Temperature coefficient of output voltage	I_O = 5 mA,	T_J = 0°C to 125°C			–1		mV/°C
Output noise voltage	f = 10 Hz to 100 kHz				75		μV
Dropout voltage					2		V
Bias current					4.8	6	mA
Bias current change	V_I = 14.5 V to 30 V,	I_O = 200 mA,	T_J = 0°C to 125°C			0.8	mA
	I_O = 5 mA to 350 mA,	T_J = 0°C to 125°C				0.5	
Short-circuit output current	V_I = 35 V				240		mA
Peak output current					0.7		A

(1) All characteristics are measured with a 0.33-μF capacitor across the input and a 0.1-μF capacitor across the output. Pulse-testing techniques maintain T_J as close to T_A as possible. Thermal effects must be taken into account separately.
(2) This specification applies only for dc power dissipation permitted by *Absolute Maximum Ratings*.

7.14 Typical Characteristics

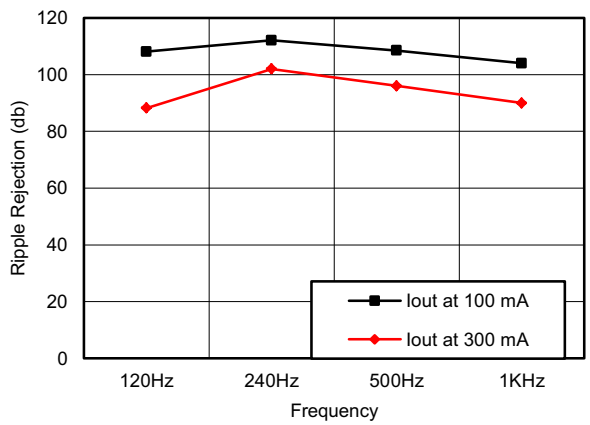

Figure 1. Ripple Rejection vs Frequency V_INPUT = 8 V to 18 V, TA = 25°C

8 Detailed Description

8.1 Overview

This series of fixed-voltage integrated-circuit voltage regulators is designed for a wide range of applications. The applications include on-card regulation for elimination of noise and distribution problems associated with single-point regulation. Each of these regulators can deliver up to 500 mA of output current. The internal current-limiting and thermal-shutdown features of these regulators essentially make them immune to overload. In addition to use as fixed-voltage regulators, these devices can be used with external components to obtain adjustable output voltages and currents and also as the power-pass element in precision regulators.

8.2 Functional Block Diagram

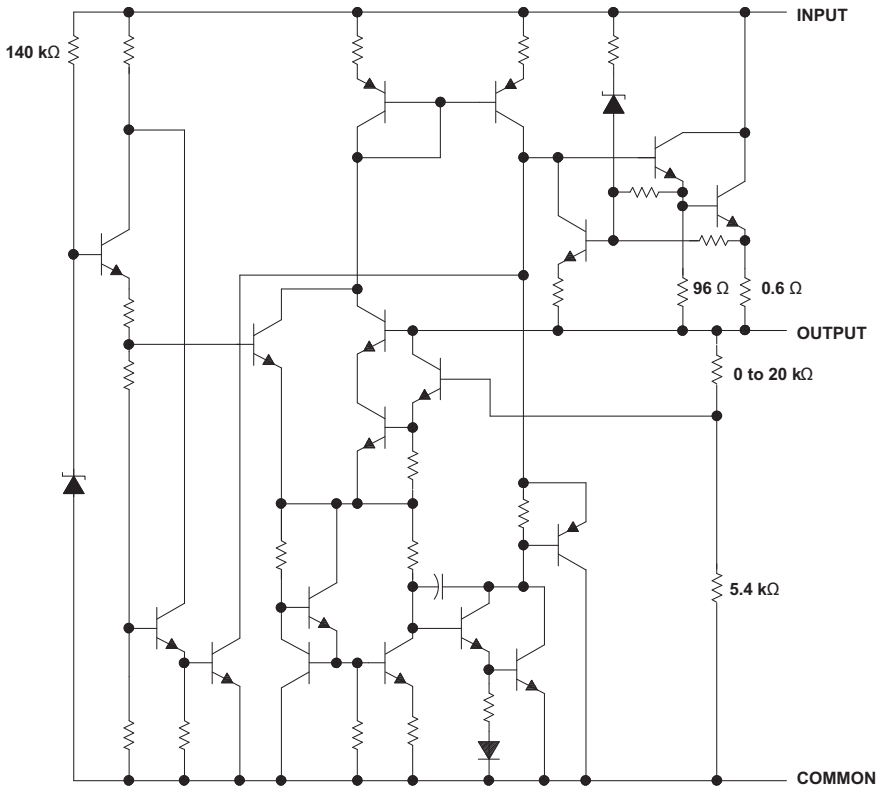

Resistor values shown are nominal.

8.3 Feature Description

- 3-Terminal Regulators
- Output Current up to 500 mA
- No External Components
- Internal Thermal-Overload Protection
- High Power-Dissipation Capability
- Internal Short-Circuit Current Limiting
- Output Transistor Safe-Area Compensation

8.4 Device Functional Modes

8.4.1 Fixed-Output Mode

These devices are available in fixed-output voltages. See the orderable part list for the desired output.

Copyright © 1976–2015, Texas Instruments Incorporated

9 Application and Implementation

NOTE

Information in the following applications sections is not part of the TI component specification, and TI does not warrant its accuracy or completeness. TI's customers are responsible for determining suitability of components for their purposes. Customers should validate and test their design implementation to confirm system functionality.

9.1 Application Information

The UA78Mxx devices are ideal for use as linear regulators with few external components needed for a working design. They are also useful for attenuating power supply noise.

9.2 Typical Application

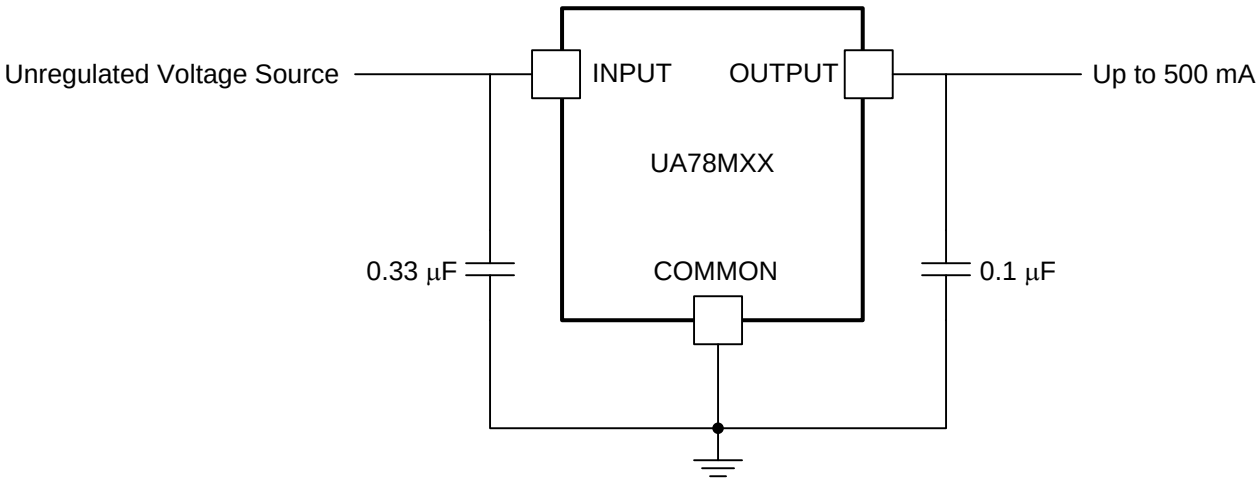

Figure 2. Fixed-Output Regulator

9.2.1 Design Requirements

An 0.33-µF decoupling capacitor on the input and a 0.1-µF decoupling capacitor on the output are recommended for the UA78Mxx to behave as close to datasheet specifications as possible.

9.2.2 Detailed Design Procedure

The customer's end application will determine how the schematic for UA78Mxx is designed. For example, if there is a load connected to a negative voltage as its ground, a clamp diode may be necessary on the output. In the event of an input short circuit or another case where the output voltage can be higher than the input, a diode shunt can be connected across the device with the anode at the output and cathode at the input

Copyright © 1976–2015, Texas Instruments Incorporated

Typical Application (continued)

9.2.3 Application Curves

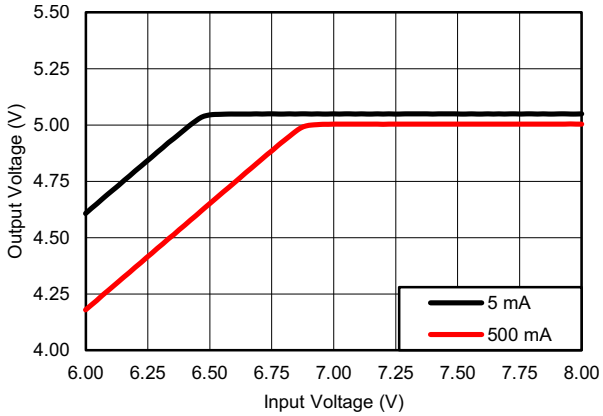

Figure 3. V_OUTPUT vs V_INPUT for I_{OUTPUT} = 5 mA and 500 mA (25°C)

Copyright © 1976–2015, Texas Instruments Incorporated

10 Power Supply Recommendations

See *Recommended Operating Conditions* for the recommended power supply voltages for each variation of the UA78Mxx. Different orderable part numbers will be able to tolerate different levels of voltage. It is also recommended to have a decoupling capacitor on the output to limit noise on the input.

11 Layout

11.1 Layout Guidelines

Keep trace widths large enough to eliminate problematic I×R voltage drops at the input and output terminals. Input decoupling capacitors should be placed as close to the UA78MXX as possible.

11.2 Layout Example

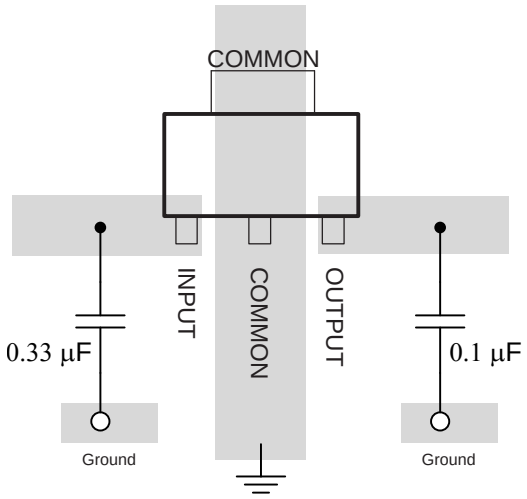

Figure 4. Layout Diagram

12 Device and Documentation Support

12.1 Related Links

The table below lists quick access links. Categories include technical documents, support and community resources, tools and software, and quick access to sample or buy.

Table 1. Related Links

PARTS	PRODUCT FOLDER	SAMPLE & BUY	TECHNICAL DOCUMENTS	TOOLS & SOFTWARE	SUPPORT & COMMUNITY
uA78M05	Click here	Click here	Click here	Click here	Click here
uA78M06	Click here	Click here	Click here	Click here	Click here
uA78M08	Click here	Click here	Click here	Click here	Click here
uA78M09	Click here	Click here	Click here	Click here	Click here
uA78M10	Click here	Click here	Click here	Click here	Click here
uA78M12	Click here	Click here	Click here	Click here	Click here
uA78M33	Click here	Click here	Click here	Click here	Click here

12.2 Trademarks

All trademarks are the property of their respective owners.

12.3 Electrostatic Discharge Caution

These devices have limited built-in ESD protection. The leads should be shorted together or the device placed in conductive foam during storage or handling to prevent electrostatic damage to the MOS gates.

12.4 Glossary

SLYZ022 — *TI Glossary*.

This glossary lists and explains terms, acronyms, and definitions.

13 Mechanical, Packaging, and Orderable Information

The following pages include mechanical, packaging, and orderable information. This information is the most current data available for the designated devices. This data is subject to change without notice and revision of this document. For browser-based versions of this data sheet, refer to the left-hand navigation.

Copyright © 1976–2015, Texas Instruments Incorporated

PACKAGING INFORMATION

Orderable Device	Status (1)	Package Type	Package Drawing	Pins	Package Qty	Eco Plan (2)	Lead finish/ Ball material (6)	MSL Peak Temp (3)	Op Temp (°C)	Device Marking (4/5)	Samples
SN78MCDCYR	ACTIVE	SOT-223	DCY	4	2500	RoHS & Green	SN	Level-2-260C-1 YEAR	0 to 125	C5	Samples
UA78M05CDCY	ACTIVE	SOT-223	DCY	4	80	RoHS & Green	SN	Level-2-260C-1 YEAR	0 to 125	C5	Samples
UA78M05CDCYG3	ACTIVE	SOT-223	DCY	4	80	RoHS & Green	SN	Level-2-260C-1 YEAR	0 to 125	C5	Samples
UA78M05CDCYR	ACTIVE	SOT-223	DCY	4	2500	RoHS & Green	SN	Level-2-260C-1 YEAR	0 to 125	C5	Samples
UA78M05CDCYRG3	ACTIVE	SOT-223	DCY	4	2500	RoHS & Green	SN	Level-2-260C-1 YEAR	0 to 125	C5	Samples
UA78M05CKCS	ACTIVE	TO-220	KCS	3	50	RoHS & Green	SN	N / A for Pkg Type	0 to 125	UA78M05C	Samples
UA78M05CKCSE3	ACTIVE	TO-220	KCS	3	50	RoHS & Green	SN	N / A for Pkg Type	0 to 125	UA78M05C	Samples
UA78M05CKVURG3	ACTIVE	TO-252	KVU	3	2500	RoHS & Green	SN	Level-3-260C-168 HR	0 to 125	78M05C	Samples
UA78M05IDCY	ACTIVE	SOT-223	DCY	4	80	RoHS & Green	SN	Level-2-260C-1 YEAR	-40 to 125	J5	Samples
UA78M05IDCYG3	ACTIVE	SOT-223	DCY	4	80	RoHS & Green	SN	Level-2-260C-1 YEAR	-40 to 125	J5	Samples
UA78M05IDCYR	ACTIVE	SOT-223	DCY	4	2500	RoHS & Green	SN	Level-2-260C-1 YEAR	-40 to 125	J5	Samples
UA78M05IDCYRG3	ACTIVE	SOT-223	DCY	4	2500	RoHS & Green	SN	Level-2-260C-1 YEAR	-40 to 125	J5	Samples
UA78M05IKCS	ACTIVE	TO-220	KCS	3	50	RoHS & Green	SN	N / A for Pkg Type	-40 to 125	UA78M05I	Samples
UA78M05IKCSE3	ACTIVE	TO-220	KCS	3	50	RoHS & Green	SN	N / A for Pkg Type	-40 to 125	UA78M05I	Samples
UA78M05IKVURG3	ACTIVE	TO-252	KVU	3	2500	RoHS & Green	SN	Level-3-260C-168 HR	-40 to 125	78M05I	Samples
UA78M06CKVURG3	ACTIVE	TO-252	KVU	3	2500	RoHS & Green	SN	Level-3-260C-168 HR	0 to 125	78M06C	Samples
UA78M08CDCY	ACTIVE	SOT-223	DCY	4	80	RoHS & Green	SN	Level-2-260C-1 YEAR	0 to 125	C8	Samples
UA78M08CDCYG3	ACTIVE	SOT-223	DCY	4	80	RoHS & Green	SN	Level-2-260C-1 YEAR	0 to 125	C8	Samples
UA78M08CDCYR	ACTIVE	SOT-223	DCY	4	2500	RoHS & Green	SN	Level-2-260C-1 YEAR	0 to 125	C8	Samples
UA78M08CKCS	ACTIVE	TO-220	KCS	3	50	RoHS & Green	SN	N / A for Pkg Type	0 to 125	UA78M08C	Samples

Orderable Device	Status (1)	Package Type	Package Drawing	Pins	Package Qty	Eco Plan (2)	Lead finish/ Ball material (6)	MSL Peak Temp (3)	Op Temp (°C)	Device Marking (4/5)	Samples
UA78M08CKCSE3	ACTIVE	TO-220	KCS	3	50	RoHS & Green	SN	N / A for Pkg Type	0 to 125	UA78M08C	Samples
UA78M08CKVURG3	ACTIVE	TO-252	KVU	3	2500	RoHS & Green	SN	Level-3-260C-168 HR	0 to 125	78M08C	Samples
UA78M09CKVURG3	ACTIVE	TO-252	KVU	3	2500	RoHS & Green	SN	Level-3-260C-168 HR	0 to 125	78M09C	Samples
UA78M10CKVURG3	ACTIVE	TO-252	KVU	3	2500	RoHS & Green	SN	Level-3-260C-168 HR	0 to 125	78M10C	Samples
UA78M12CKCS	ACTIVE	TO-220	KCS	3	50	RoHS & Green	SN	N / A for Pkg Type	0 to 125	UA78M12C	Samples
UA78M12CKCSE3	ACTIVE	TO-220	KCS	3	50	RoHS & Green	SN	N / A for Pkg Type	0 to 125	UA78M12C	Samples
UA78M12CKVURG3	ACTIVE	TO-252	KVU	3	2500	RoHS & Green	SN	Level-3-260C-168 HR	0 to 125	78M12C	Samples
UA78M33CDCY	ACTIVE	SOT-223	DCY	4	80	RoHS & Green	SN	Level-2-260C-1 YEAR	0 to 125	C3	Samples
UA78M33CDCYG3	ACTIVE	SOT-223	DCY	4	80	RoHS & Green	SN	Level-2-260C-1 YEAR	0 to 125	C3	Samples
UA78M33CDCYR	ACTIVE	SOT-223	DCY	4	2500	RoHS & Green	SN	Level-2-260C-1 YEAR	0 to 125	C3	Samples
UA78M33CDCYRG3	ACTIVE	SOT-223	DCY	4	2500	RoHS & Green	SN	Level-2-260C-1 YEAR	0 to 125	C3	Samples
UA78M33CKCS	ACTIVE	TO-220	KCS	3	50	RoHS & Green	SN	N / A for Pkg Type	0 to 125	UA78M33C	Samples
UA78M33CKCSE3	ACTIVE	TO-220	KCS	3	50	RoHS & Green	SN	N / A for Pkg Type	0 to 125	UA78M33C	Samples
UA78M33CKVURG3	ACTIVE	TO-252	KVU	3	2500	RoHS & Green	SN	Level-3-260C-168 HR	0 to 125	78M33C	Samples
UA78M33IKVURG3	ACTIVE	TO-252	KVU	3	2500	RoHS & Green	SN	Level-3-260C-168 HR	-40 to 125	78M33I	Samples

(1) The marketing status values are defined as follows:
ACTIVE: Product device recommended for new designs.
LIFEBUY: TI has announced that the device will be discontinued, and a lifetime-buy period is in effect.
NRND: Not recommended for new designs. Device is in production to support existing customers, but TI does not recommend using this part in a new design.
PREVIEW: Device has been announced but is not in production. Samples may or may not be available.
OBSOLETE: TI has discontinued the production of the device.

(2) **RoHS:** TI defines "RoHS" to mean semiconductor products that are compliant with the current EU RoHS requirements for all 10 RoHS substances, including the requirement that RoHS substance do not exceed 0.1% by weight in homogeneous materials. Where designed to be soldered at high temperatures, "RoHS" products are suitable for use in specified lead-free processes. TI may reference these types of products as "Pb-Free".
RoHS Exempt: TI defines "RoHS Exempt" to mean products that contain lead but are compliant with EU RoHS pursuant to a specific EU RoHS exemption.

Green: TI defines "Green" to mean the content of Chlorine (Cl) and Bromine (Br) based flame retardants meet JS709B low halogen requirements of <=1000ppm threshold. Antimony trioxide based flame retardants must also meet the <=1000ppm threshold requirement.

(3) MSL, Peak Temp. - The Moisture Sensitivity Level rating according to the JEDEC industry standard classifications, and peak solder temperature.

(4) There may be additional marking, which relates to the logo, the lot trace code information, or the environmental category on the device.

(5) Multiple Device Markings will be inside parentheses. Only one Device Marking contained in parentheses and separated by a "~" will appear on a device. If a line is indented then it is a continuation of the previous line and the two combined represent the entire Device Marking for that device.

(6) Lead finish/Ball material - Orderable Devices may have multiple material finish options. Finish options are separated by a vertical ruled line. Lead finish/Ball material values may wrap to two lines if the finish value exceeds the maximum column width.

Important Information and Disclaimer: The information provided on this page represents TI's knowledge and belief as of the date that it is provided. TI bases its knowledge and belief on information provided by third parties, and makes no representation or warranty as to the accuracy of such information. Efforts are underway to better integrate information from third parties. TI has taken and continues to take reasonable steps to provide representative and accurate information but may not have conducted destructive testing or chemical analysis on incoming materials and chemicals. TI and TI suppliers consider certain information to be proprietary, and thus CAS numbers and other limited information may not be available for release.

In no event shall TI's liability arising out of such information exceed the total purchase price of the TI part(s) at issue in this document sold by TI to Customer on an annual basis.

OTHER QUALIFIED VERSIONS OF UA78M :

- Automotive : UA78M-Q1

NOTE: Qualified Version Definitions:

- Automotive - Q100 devices qualified for high-reliability automotive applications targeting zero defects

TAPE AND REEL INFORMATION

REEL DIMENSIONS

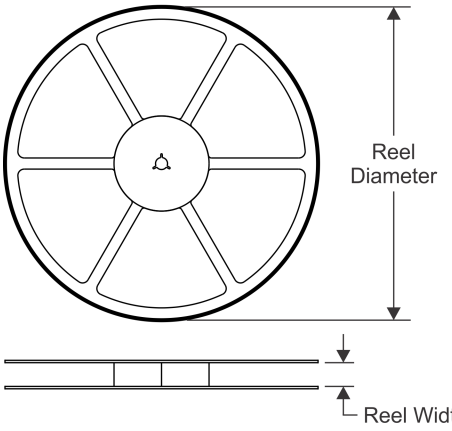

TAPE DIMENSIONS

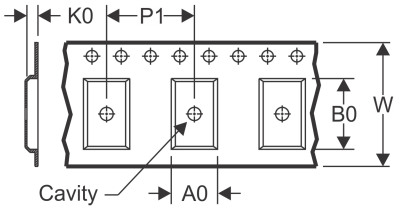

A0	Dimension designed to accommodate the component width
B0	Dimension designed to accommodate the component length
K0	Dimension designed to accommodate the component thickness
W	Overall width of the carrier tape
P1	Pitch between successive cavity centers

QUADRANT ASSIGNMENTS FOR PIN 1 ORIENTATION IN TAPE

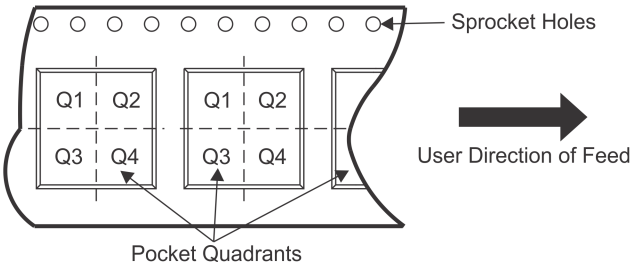

*All dimensions are nominal

Device	Package Type	Package Drawing	Pins	SPQ	Reel Diameter (mm)	Reel Width W1 (mm)	A0 (mm)	B0 (mm)	K0 (mm)	P1 (mm)	W (mm)	Pin1 Quadrant
UA78M05CDCYR	SOT-223	DCY	4	2500	330.0	12.4	6.55	7.25	1.9	8.0	12.0	Q3
UA78M05CDCYR	SOT-223	DCY	4	2500	330.0	12.4	7.0	7.42	2.0	8.0	12.0	Q3
UA78M05CDCYR	SOT-223	DCY	4	2500	330.0	12.4	7.05	7.4	1.9	8.0	12.0	Q3
UA78M05CKVURG3	TO-252	KVU	3	2500	330.0	16.4	6.9	10.5	2.7	8.0	16.0	Q2
UA78M05CKVURG3	TO-252	KVU	3	2500	330.0	16.4	6.9	10.5	2.8	8.0	16.0	Q2
UA78M05IDCYR	SOT-223	DCY	4	2500	330.0	12.4	7.05	7.4	1.9	8.0	12.0	Q3
UA78M05IDCYR	SOT-223	DCY	4	2500	330.0	12.4	6.55	7.25	1.9	8.0	12.0	Q3
UA78M05IDCYR	SOT-223	DCY	4	2500	330.0	12.4	7.0	7.42	2.0	8.0	12.0	Q3
UA78M05IKVURG3	TO-252	KVU	3	2500	330.0	16.4	6.9	10.5	2.8	8.0	16.0	Q2
UA78M05IKVURG3	TO-252	KVU	3	2500	330.0	16.4	6.9	10.5	2.7	8.0	16.0	Q2
UA78M06CKVURG3	TO-252	KVU	3	2500	330.0	16.4	6.9	10.5	2.7	8.0	16.0	Q2
UA78M08CDCYR	SOT-223	DCY	4	2500	330.0	12.4	7.0	7.42	2.0	8.0	12.0	Q3
UA78M08CDCYR	SOT-223	DCY	4	2500	330.0	12.4	7.05	7.4	1.9	8.0	12.0	Q3
UA78M08CKVURG3	TO-252	KVU	3	2500	330.0	16.4	6.9	10.5	2.7	8.0	16.0	Q2
UA78M09CKVURG3	TO-252	KVU	3	2500	330.0	16.4	6.9	10.5	2.7	8.0	16.0	Q2
UA78M10CKVURG3	TO-252	KVU	3	2500	330.0	16.4	6.9	10.5	2.7	8.0	16.0	Q2
UA78M10CKVURG3	TO-252	KVU	3	2500	330.0	16.4	6.9	10.5	2.8	8.0	16.0	Q2
UA78M12CKVURG3	TO-252	KVU	3	2500	330.0	16.4	6.9	10.5	2.7	8.0	16.0	Q2

Device	Package Type	Package Drawing	Pins	SPQ	Reel Diameter (mm)	Reel Width W1 (mm)	A0 (mm)	B0 (mm)	K0 (mm)	P1 (mm)	W (mm)	Pin1 Quadrant
UA78M33CDCYR	SOT-223	DCY	4	2500	330.0	12.4	7.0	7.42	2.0	8.0	12.0	Q3
UA78M33CDCYR	SOT-223	DCY	4	2500	330.0	12.4	6.55	7.25	1.9	8.0	12.0	Q3
UA78M33CDCYR	SOT-223	DCY	4	2500	330.0	12.4	7.05	7.4	1.9	8.0	12.0	Q3
UA78M33CKVURG3	TO-252	KVU	3	2500	330.0	16.4	6.9	10.5	2.7	8.0	16.0	Q2
UA78M33IKVURG3	TO-252	KVU	3	2500	330.0	16.4	6.9	10.5	2.8	8.0	16.0	Q2
UA78M33IKVURG3	TO-252	KVU	3	2500	330.0	16.4	6.9	10.5	2.7	8.0	16.0	Q2

TAPE AND REEL BOX DIMENSIONS

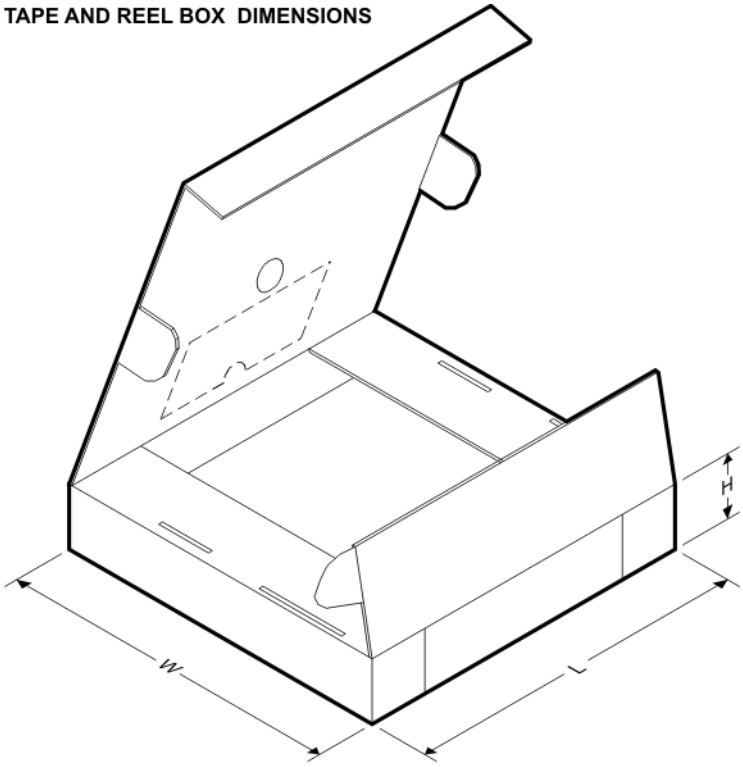

*All dimensions are nominal

Device	Package Type	Package Drawing	Pins	SPQ	Length (mm)	Width (mm)	Height (mm)
UA78M05CDCYR	SOT-223	DCY	4	2500	336.0	336.0	48.0
UA78M05CDCYR	SOT-223	DCY	4	2500	350.0	334.0	47.0
UA78M05CDCYR	SOT-223	DCY	4	2500	340.0	340.0	38.0
UA78M05CKVURG3	TO-252	KVU	3	2500	340.0	340.0	38.0
UA78M05CKVURG3	TO-252	KVU	3	2500	350.0	334.0	47.0
UA78M05IDCYR	SOT-223	DCY	4	2500	340.0	340.0	38.0
UA78M05IDCYR	SOT-223	DCY	4	2500	336.0	336.0	48.0
UA78M05IDCYR	SOT-223	DCY	4	2500	350.0	334.0	47.0
UA78M05IKVURG3	TO-252	KVU	3	2500	350.0	334.0	47.0
UA78M05IKVURG3	TO-252	KVU	3	2500	340.0	340.0	38.0
UA78M06CKVURG3	TO-252	KVU	3	2500	340.0	340.0	38.0

Device	Package Type	Package Drawing	Pins	SPQ	Length (mm)	Width (mm)	Height (mm)
UA78M08CDCYR	SOT-223	DCY	4	2500	350.0	334.0	47.0
UA78M08CDCYR	SOT-223	DCY	4	2500	340.0	340.0	38.0
UA78M08CKVURG3	TO-252	KVU	3	2500	340.0	340.0	38.0
UA78M09CKVURG3	TO-252	KVU	3	2500	340.0	340.0	38.0
UA78M10CKVURG3	TO-252	KVU	3	2500	340.0	340.0	38.0
UA78M10CKVURG3	TO-252	KVU	3	2500	350.0	334.0	47.0
UA78M12CKVURG3	TO-252	KVU	3	2500	340.0	340.0	38.0
UA78M33CDCYR	SOT-223	DCY	4	2500	350.0	334.0	47.0
UA78M33CDCYR	SOT-223	DCY	4	2500	336.0	336.0	48.0
UA78M33CDCYR	SOT-223	DCY	4	2500	340.0	340.0	38.0
UA78M33CKVURG3	TO-252	KVU	3	2500	340.0	340.0	38.0
UA78M33IKVURG3	TO-252	KVU	3	2500	350.0	334.0	47.0
UA78M33IKVURG3	TO-252	KVU	3	2500	340.0	340.0	38.0

TUBE

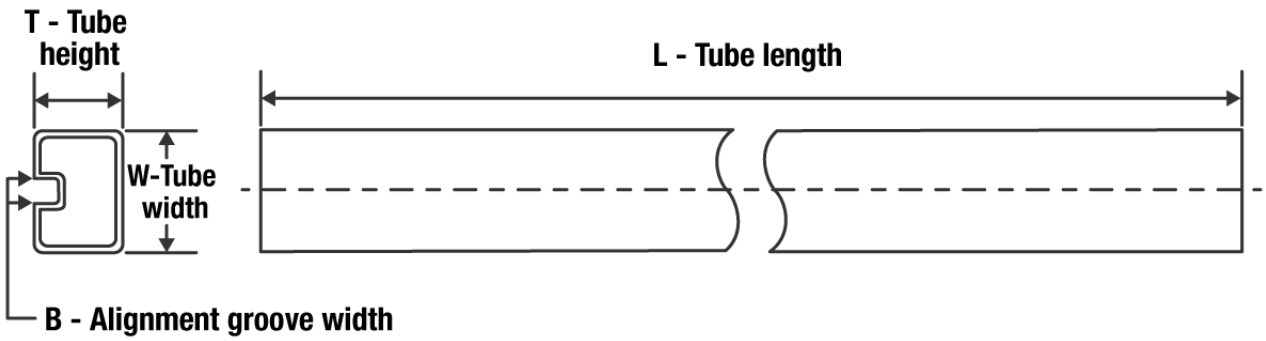

*All dimensions are nominal

Device	Package Name	Package Type	Pins	SPQ	L (mm)	W (mm)	T (µm)	B (mm)
UA78M05CDCY	DCY	SOT-223	4	80	559	8.6	500	3.6
UA78M05CDCYG3	DCY	SOT-223	4	80	559	8.6	500	3.6
UA78M05CKCS	KCS	TO-220	3	50	532	34.1	700	9.6
UA78M05CKCS	KCS	TO-220	3	50	532	34.1	700	9.6
UA78M05CKCSE3	KCS	TO-220	3	50	532	34.1	700	9.6
UA78M05CKCSE3	KCS	TO-220	3	50	532	34.1	700	9.6
UA78M05IDCY	DCY	SOT-223	4	80	559	8.6	500	3.6
UA78M05IDCYG3	DCY	SOT-223	4	80	559	8.6	500	3.6
UA78M05IKCS	KCS	TO-220	3	50	532	34.1	700	9.6
UA78M05IKCS	KCS	TO-220	3	50	532	34.1	700	9.6
UA78M05IKCSE3	KCS	TO-220	3	50	532	34.1	700	9.6
UA78M05IKCSE3	KCS	TO-220	3	50	532	34.1	700	9.6
UA78M08CDCY	DCY	SOT-223	4	80	559	8.6	500	3.6
UA78M08CDCYG3	DCY	SOT-223	4	80	559	8.6	500	3.6
UA78M08CKCS	KCS	TO-220	3	50	532	34.1	700	9.6
UA78M08CKCS	KCS	TO-220	3	50	532	34.1	700	9.6
UA78M08CKCSE3	KCS	TO-220	3	50	532	34.1	700	9.6
UA78M08CKCSE3	KCS	TO-220	3	50	532	34.1	700	9.6
UA78M12CKCS	KCS	TO-220	3	50	532	34.1	700	9.6
UA78M12CKCS	KCS	TO-220	3	50	532	34.1	700	9.6
UA78M12CKCSE3	KCS	TO-220	3	50	532	34.1	700	9.6
UA78M12CKCSE3	KCS	TO-220	3	50	532	34.1	700	9.6
UA78M33CDCY	DCY	SOT-223	4	80	559	8.6	500	3.6
UA78M33CDCYG3	DCY	SOT-223	4	80	559	8.6	500	3.6
UA78M33CKCS	KCS	TO-220	3	50	532	34.1	700	9.6
UA78M33CKCS	KCS	TO-220	3	50	532	34.1	700	9.6
UA78M33CKCSE3	KCS	TO-220	3	50	532	34.1	700	9.6
UA78M33CKCSE3	KCS	TO-220	3	50	532	34.1	700	9.6

DCY (R-PDSO-G4) **PLASTIC SMALL-OUTLINE**

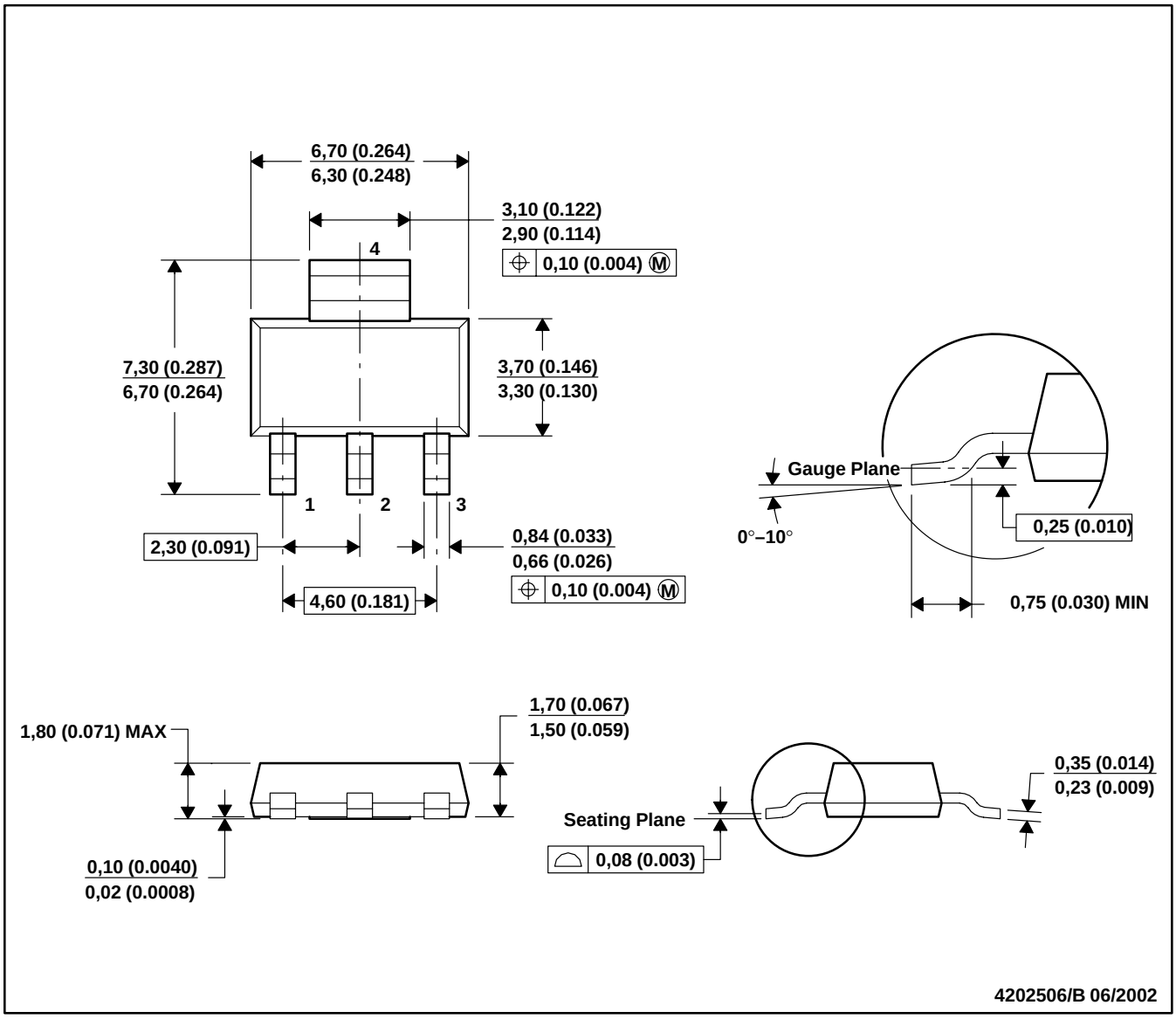

NOTES: A. All linear dimensions are in millimeters (inches).
B. This drawing is subject to change without notice.
C. Body dimensions do not include mold flash or protrusion.
D. Falls within JEDEC TO-261 Variation AA.

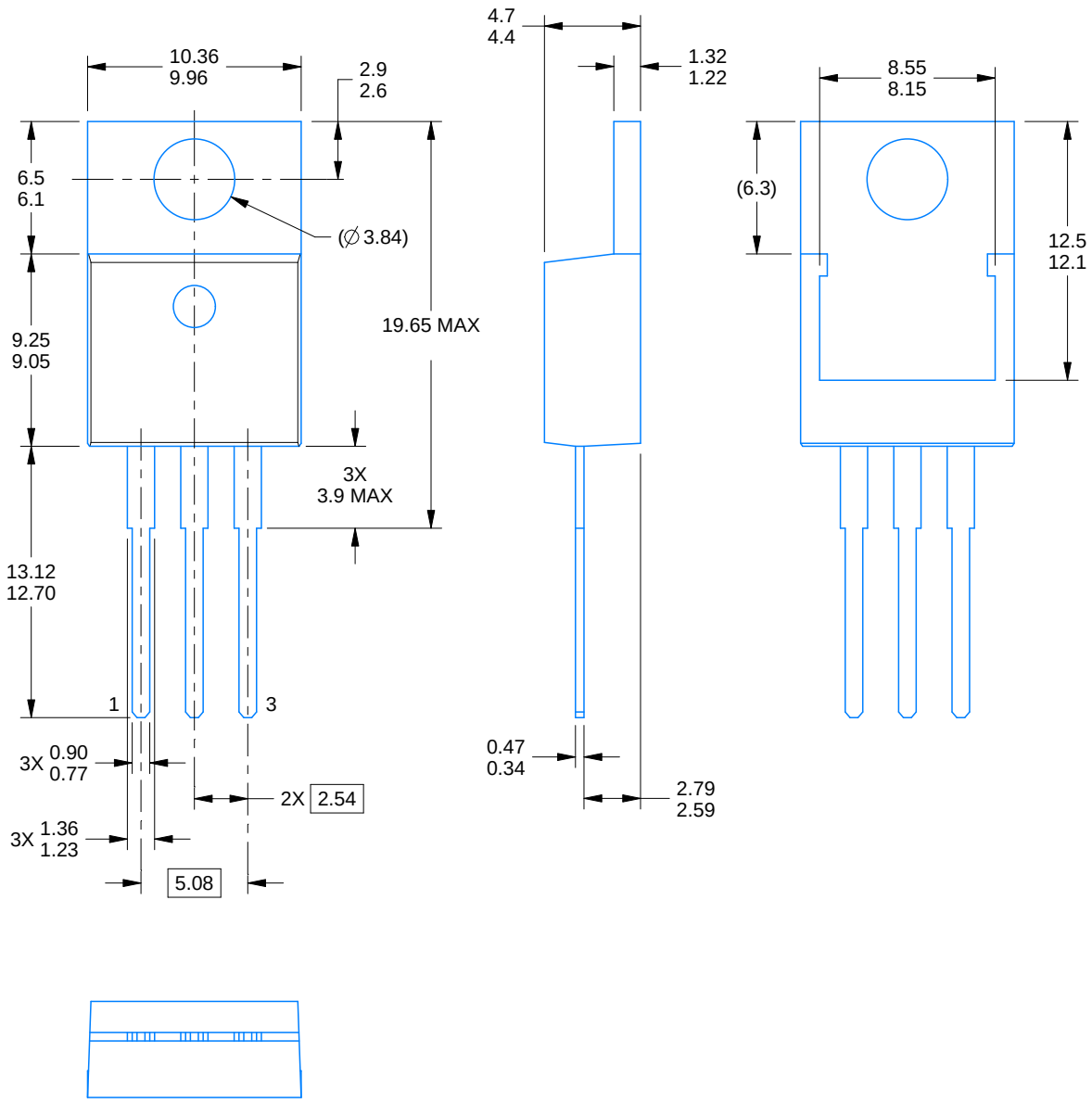

4222214/B 08/2018

NOTES:

1. Dimensions are in millimeters. Any dimension in brackets or parenthesis are for reference only. Dimensioning and tolerancing per ASME Y14.5M.
2. This drawing is subject to change without notice.
3. Reference JEDEC registration TO-220.

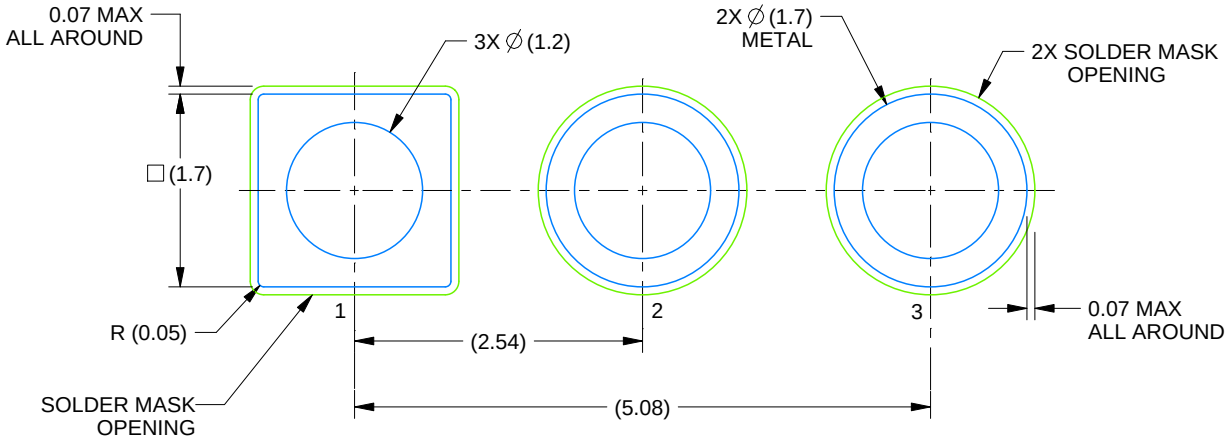

LAND PATTERN EXAMPLE
NON-SOLDER MASK DEFINED
SCALE:15X

4222214/B 08/2018

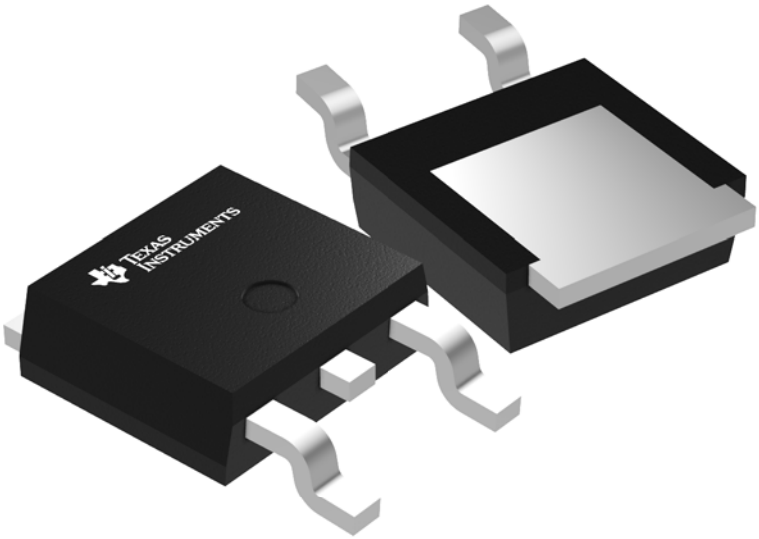

Images above are just a representation of the package family, actual package may vary.
Refer to the product data sheet for package details.

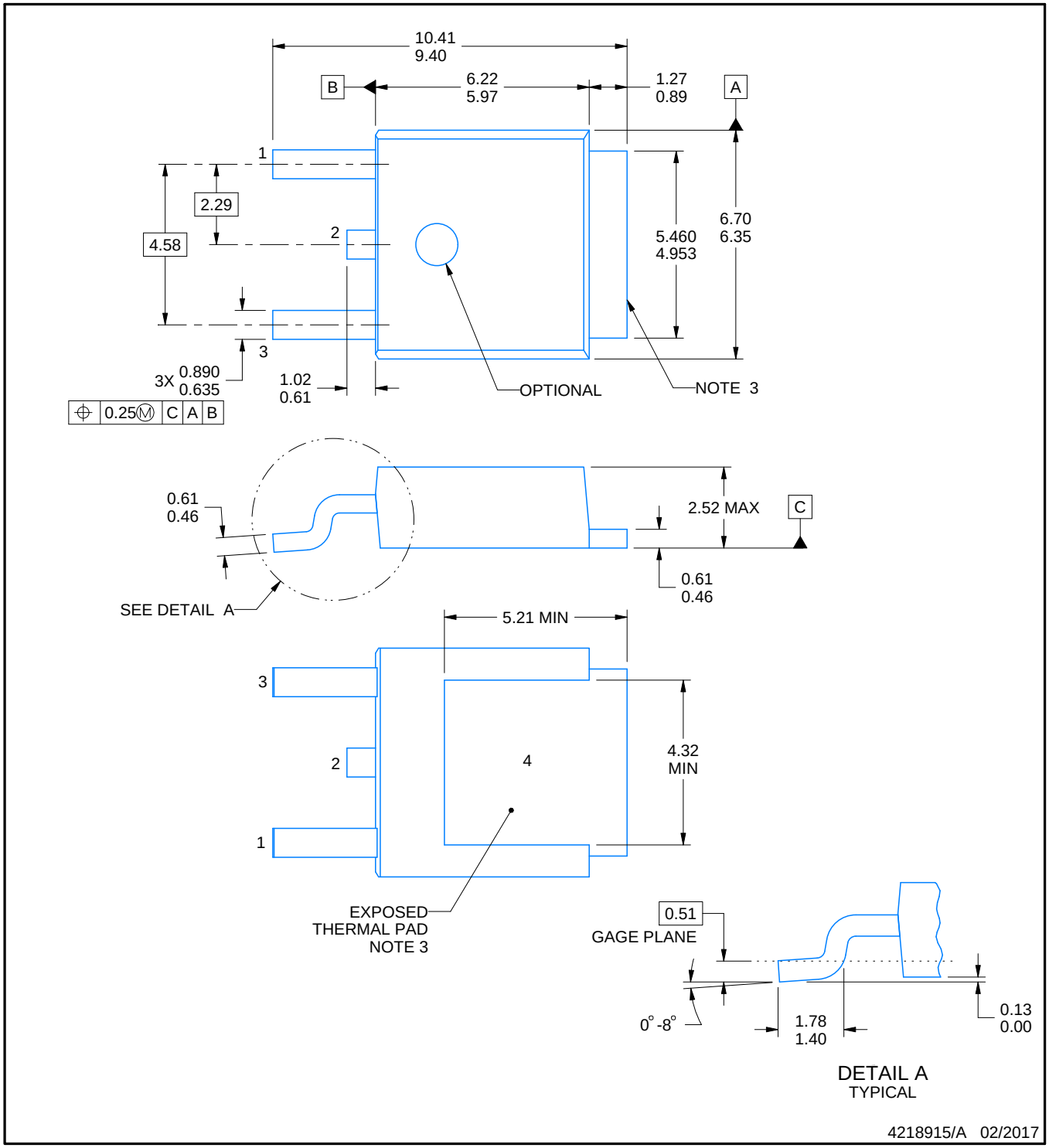

NOTES:

1. All linear dimensions are in millimeters. Any dimensions in parenthesis are for reference only. Dimensioning and tolerancing per ASME Y14.5M.
2. This drawing is subject to change without notice.
3. Shape may vary per different assembly sites.
4. Reference JEDEC registration TO-252.

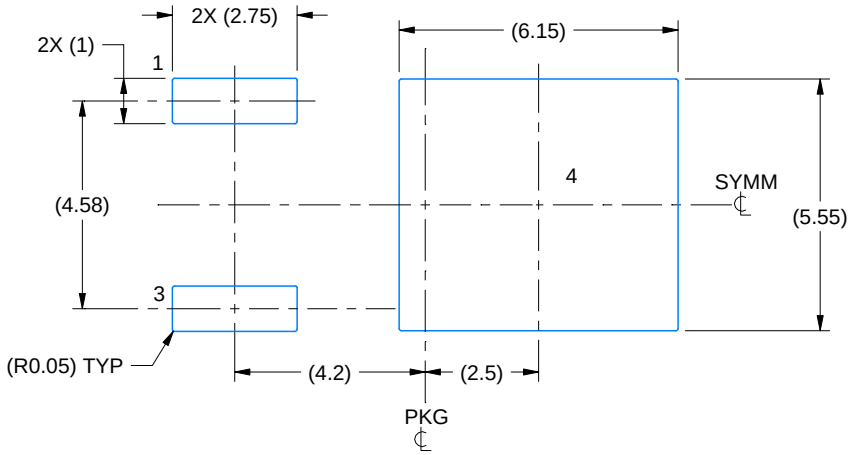

LAND PATTERN EXAMPLE
EXPOSED METAL SHOWN
SCALE:6X

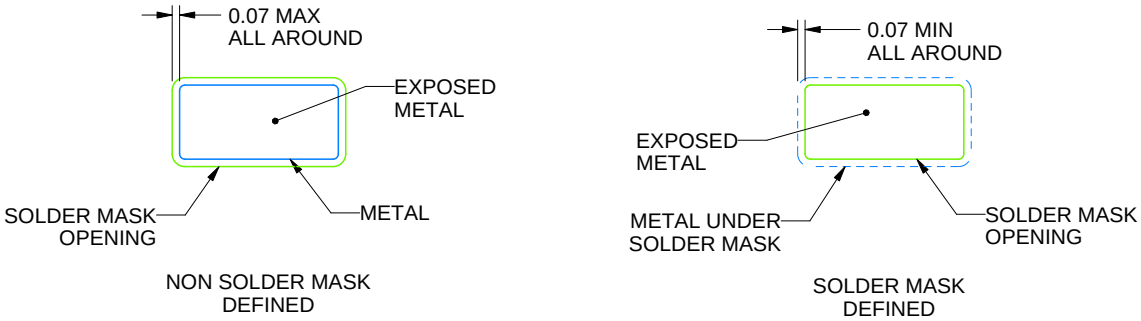

SOLDER MASK DETAILS
NOT TO SCALE

4218915/A 02/2017

NOTES: (continued)

5. This package is designed to be soldered to a thermal pad on the board. For more information, see Texas Instruments literature numbers SLMA002(www.ti.com/lit/slm002) and SLMA004 (www.ti.com/lit/slma004).
6. Vias are optional depending on application, refer to device data sheet. It is recommended that vias under paste be filled, plugged or tented.

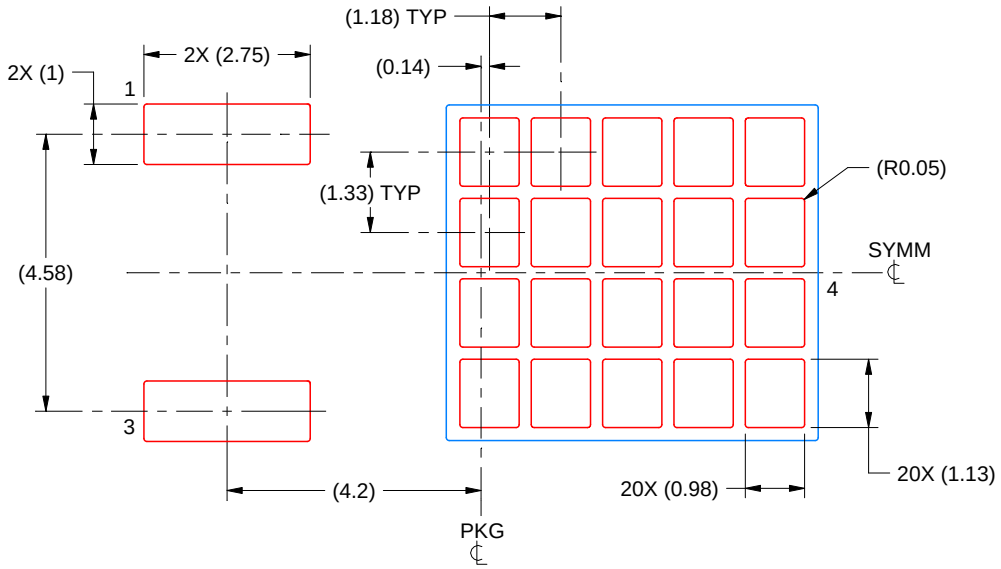

SOLDER PASTE EXAMPLE
BASED ON 0.125 mm THICK STENCIL

EXPOSED PAD
65% PRINTED SOLDER COVERAGE BY AREA
SCALE:8X

4218915/A 02/2017

NOTES: (continued)

7. Laser cutting apertures with trapezoidal walls and rounded corners may offer better paste release. IPC-7525 may have alternate design recommendations.
8. Board assembly site may have different recommendations for stencil design.

IMPORTANT NOTICE AND DISCLAIMER

TI PROVIDES TECHNICAL AND RELIABILITY DATA (INCLUDING DATA SHEETS), DESIGN RESOURCES (INCLUDING REFERENCE DESIGNS), APPLICATION OR OTHER DESIGN ADVICE, WEB TOOLS, SAFETY INFORMATION, AND OTHER RESOURCES “AS IS” AND WITH ALL FAULTS, AND DISCLAIMS ALL WARRANTIES, EXPRESS AND IMPLIED, INCLUDING WITHOUT LIMITATION ANY IMPLIED WARRANTIES OF MERCHANTABILITY, FITNESS FOR A PARTICULAR PURPOSE OR NON-INFRINGEMENT OF THIRD PARTY INTELLECTUAL PROPERTY RIGHTS.

These resources are intended for skilled developers designing with TI products. You are solely responsible for (1) selecting the appropriate TI products for your application, (2) designing, validating and testing your application, and (3) ensuring your application meets applicable standards, and any other safety, security, regulatory or other requirements.

These resources are subject to change without notice. TI grants you permission to use these resources only for development of an application that uses the TI products described in the resource. Other reproduction and display of these resources is prohibited. No license is granted to any other TI intellectual property right or to any third party intellectual property right. TI disclaims responsibility for, and you will fully indemnify TI and its representatives against, any claims, damages, costs, losses, and liabilities arising out of your use of these resources.

TI’s products are provided subject to TI’s Terms of Sale or other applicable terms available either on ti.com or provided in conjunction with such TI products. TI’s provision of these resources does not expand or otherwise alter TI’s applicable warranties or warranty disclaimers for TI products.

TI objects to and rejects any additional or different terms you may have proposed.

Mailing Address: Texas Instruments, Post Office Box 655303, Dallas, Texas 75265
Copyright © 2022, Texas Instruments Incorporated