UCCx808A 低功耗电流模式推挽 PWM

1 特性

- 采用推挽配置的双路输出驱动级
- 采用了用于改善动态响应的电流检测放电晶体管
- 130µA 典型启动电流
- 1mA 典型运行电流
- 工作频率至 1MHz
- 内部软启动
- 增益带宽积为 2MHz 的片上误差放大器
- 片上 VDD 钳位
- 能够提供 500mA 峰值拉电流和 1A 峰值灌电流的输出驱动级

2 应用

- 高效开关模式电源
- 电信直流/直流转换器
- 负载点电源模块
- 低成本推挽式和半桥 应用

3 说明

UCCx808A 器件是一系列 BiCMOS 推挽式高速低功耗脉宽调制器。UCCx808A 包含离线或直流/直流固定频率电流模式开关电源所需的全部控制和驱动电路，同时最大限度减少了外部器件数。

UCCx808A 双路输出驱动级以推挽配置方式排列。两个输出均利用一个切换触发器在振荡器频率的一半处进行切换。两个输出间的死区时间通常为 60ns 至 200ns，具体取决于计时电容器和电阻器的值，因此可将每个输出级占空比的值限制为小于 50%。

UCCx808A 系列提供各种封装选项和温度范围选项，并支持选择欠压锁定电平。此系列器件具有适用于离线和电池供电系统的 UVLO 阈值和磁滞选项。

UCCx808A 是 UCC3808 系列的增强版本。两者之间的最大差异在于，A 版本在 CS 引脚与地之间采用一个内部放电晶体管，该晶体管在振荡器死区时间期间的每个时钟周期内都保持激活状态。此特性会在每个周期期间对 CS 引脚上的任何滤波电容进行放电，这有助于最大限度减小滤波电容器的值并缩短电流检测延时。

器件信息(1)

器件型号	封装	封装尺寸（标称值）
UCC2808A-1、UCC2808A-2、UCC3808A-2	SOIC (8)	4.90mm × 3.91mm
	PDIP (8)	9.81mm × 6.35mm
	TSSOP (8)	3.00mm × 4.40mm
UCC3808A-1	SOIC (8)	4.90mm × 3.91mm
	PDIP (8)	9.81mm × 6.35mm

(1) 要了解所有可用封装，请参见产品说明书末尾的可订购产品附录。

简化应用

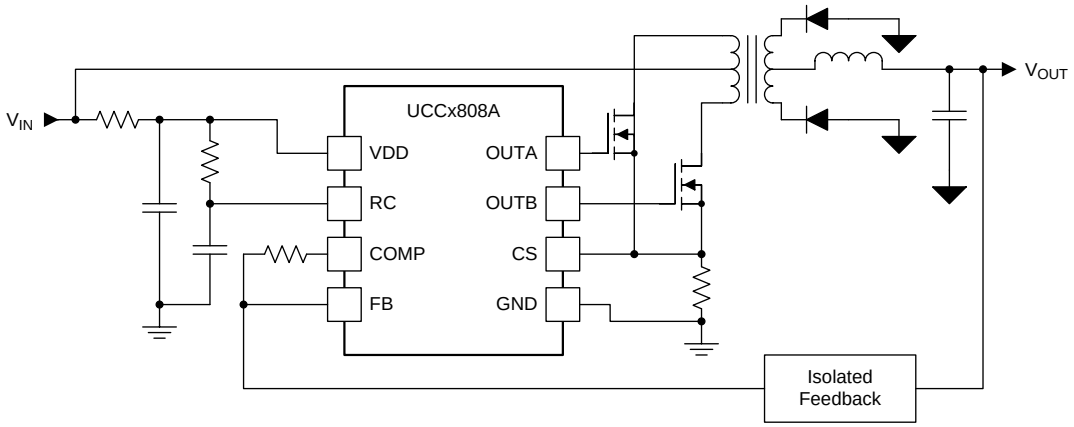

本文档旨在为方便起见，提供有关 TI 产品中文版本的信息，以确认产品的概要。 有关适用的官方英文版本的最新信息，请访问 www.ti.com，其内容始终优先。 TI 不保证翻译的准确性和有效性。 在实际设计之前，请务必参考最新版本的英文版本。

目录

1 特性 ... 1
2 应用 ... 1
3 说明 ... 1
4 修订历史记录 ... 2
5 **Pin Configuration and Functions** ... 3
6 **Specifications** ... 5
6.1 Absolute Maximum Ratings ... 5
6.2 ESD Ratings ... 5
6.3 Recommended Operating Conditions ... 5
6.4 Thermal Information ... 5
6.5 Electrical Characteristics ... 6
6.6 Typical Characteristics ... 7
7 **Detailed Description** ... 9
7.1 Overview ... 9
7.2 Functional Block Diagrams ... 9
7.3 Feature Description ... 10
7.4 Device Functional Modes ... 11
8 **Application and Implementation** ... 12
8.1 Application Information ... 12
8.2 Typical Application ... 12
9 **Power Supply Recommendations** ... 14
10 **Layout** ... 14
10.1 Layout Guidelines ... 14
10.2 Layout Example ... 14
11 器件和文档支持 ... 15
11.1 文档支持 ... 15
11.2 相关链接 ... 15
11.3 接收文档更新通知 ... 15
11.4 社区资源 ... 15
11.5 商标 ... 15
11.6 静电放电警告 ... 15
11.7 术语表 ... 15
12 机械、封装和可订购信息 ... 15

4 修订历史记录

注：之前版本的页码可能与当前版本有所不同。

Changes from Revision E (December 2016) to Revision F — **Page**

- 已更改 更改了*简化应用* ... 1
- Changed references of N package to P package (PDIP) ... 5
- 已更改 *静电放电注意事项* 声明 ... 15

Changes from Revision D (August 2002) to Revision E — **Page**

- 已添加 添加了 *ESD 额定值* 表、*特性 说明* 部分、*器件功能模式*、*应用和实施* 部分、*电源相关建议* 部分、*布局* 部分、*器件和文档支持* 部分以及*机械、封装和可订购信息* 部分 ... 1
- Deleted Lead temperature, soldering (10 s): 300°C maximum ... 5

Copyright © 1999–2018, Texas Instruments Incorporated

5 Pin Configuration and Functions

UCCx808A D or P Package
8-Pin SOIC or PDIP
Top View

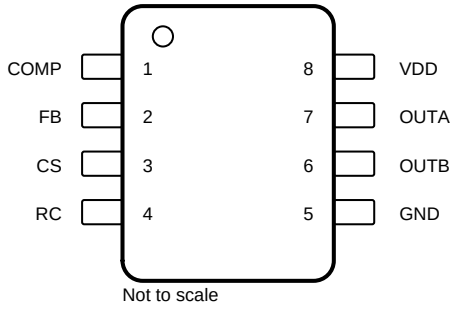

UCC2808A-x, UCC3808A-2 PW Package
8-Pin TSSOP
Top View

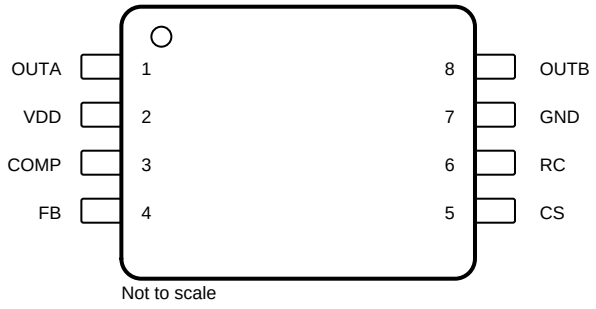

Pin Functions

PIN			TYPE(1)	DESCRIPTION
NAME	SOIC, PDIP	TSSOP		
COMP	1	3	O	COMP is the output of the error amplifier and the input of the PWM comparator. The error amplifier in the UCCx808A is a true low-output impedance, 2-MHz operational amplifier. As such, the COMP pin can both source and sink current. However, the error amplifier is internally current limited, so that zero duty cycle can be externally forced by pulling COMP to GND. The UCCx808A family features built-in full-cycle soft start. Soft start is implemented as a clamp on the maximum COMP voltage.
CS	3	5	I	The input to the PWM, peak current, and overcurrent comparators. The overcurrent comparator is only intended for fault sensing. Exceeding the overcurrent threshold causes a soft-start cycle. An internal MOSFET discharges the current sense filter capacitor to improve dynamic performance of the power converter.
FB	2	4	I	The inverting input to the error amplifier. For best stability, keep FB lead length as short as possible and FB stray capacitance as small as possible.
GND	5	7	G	Reference ground and power ground for all functions. Because of high currents, and high-frequency operation of the UCC3808A, a low impedance circuit board ground plane is highly recommended.
OUTA	7	1	O	Alternating high current output stages. Both stages are capable of driving the gate of a power MOSFET. Each stage is capable of 500-mA peak-source current, and 1-A peak-sink current. The output stages switch at half the oscillator frequency, in a push-pull configuration. When the voltage on the RC pin is rising, one of the two outputs is high, but during fall time, both outputs are off. This *dead time* between the two outputs, along with a slower output rise time than fall time, insures that the two outputs can not be on at the same time. This dead time is typically 60 ns to 200 ns and depends upon the values of the timing capacitor and resistor. The high-current-output drivers consist of MOSFET output devices, which switch from VDD to GND. Each output stage also provides a very low impedance to overshoot and undershoot. This means that in many cases, external-schottky-clamp diodes are not required.
OUTB	6	8	O	Alternating high current output stages. Both stages are capable of driving the gate of a power MOSFET. Each stage is capable of 500-mA peak-source current, and 1-A peak-sink current. The output stages switch at half the oscillator frequency, in a push-pull configuration. When the voltage on the RC pin is rising, one of the two outputs is high, but during fall time, both outputs are off. This *dead time* between the two outputs, along with a slower output rise time than fall time, insures that the two outputs can not be on at the same time. This dead time is typically 60 ns to 200 ns and depends upon the values of the timing capacitor and resistor. The high-current-output drivers consist of MOSFET output devices, which switch from VDD to GND. Each output stage also provides a very low impedance to overshoot and undershoot. This means that in many cases, external-schottky-clamp diodes are not required.

(1) P = Power, G = Ground, I = Input, O = Output

Copyright © 1999–2018, Texas Instruments Incorporated

Pin Functions (continued)

PIN			TYPE[(1)]	DESCRIPTION
NAME	SOIC, PDIP	TSSOP		
RC	4	6	O	The oscillator programming pin. The UCC3808A's oscillator tracks VDD and GND internally, so that variations in power supply rails minimally affect frequency stability. *Functional Block Diagrams* shows the oscillator block diagram. Only two components are required to program the oscillator: a resistor (tied to the VDD and RC), and a capacitor (tied to the RC and GND). The approximate oscillator frequency is determined by the simple formula in Equation 1. The recommended range of timing resistors is between 10 kΩ and 200 kΩ and range of timing capacitors is between 100 pF and 1000 pF. Timing resistors less than 10 kΩ must be avoided. For best performance, keep the timing capacitor lead to GND as short as possible, the timing resistor lead from VDD as short as possible, and the leads between timing components and RC as short as possible. Separate ground and VDD traces to the external timing network are encouraged.
VDD	8	2	P	The power input connection for this device. Although quiescent VDD current is very low, total supply current is higher, depending on OUTA and OUTB current, and the programmed oscillator frequency. Total VDD current is the sum of quiescent VDD current and the average OUT current. Knowing the operating frequency and the MOSFET gate charge (Qg), average OUT current can be calculated from Equation 2. To prevent noise problems, bypass VDD to GND with a ceramic capacitor as close to the chip as possible along with an electrolytic capacitor. A 1-µF decoupling capacitor is recommended.

Copyright © 1999–2018, Texas Instruments Incorporated

6 Specifications

6.1 Absolute Maximum Ratings

over operating free-air temperature range (unless otherwise noted)[(1)(2)]

		MIN	MAX	UNIT
Supply voltage (IDD ≤ 10 mA)			15	V
Supply current			20	mA
OUTA/OUTB source current (peak)			–0.5	A
OUTA/OUTB sink current (peak)			1	A
Analog inputs (FB, CS)		–0.3	VDD + 0.3 (not to exceed 6)	V
Power dissipation at T_A = 25°C	P package		1	W
	D package		650	mW
	PW package		400	
Junction temperature, T_J		–55	150	°C
Storage temperature, T_{stg}		–65	150	°C

(1) Stresses beyond those listed under *Absolute Maximum Ratings* may cause permanent damage to the device. These are stress ratings only, which do not imply functional operation of the device at these or any other conditions beyond those indicated under *Recommended Operating Conditions*. Exposure to absolute-maximum-rated conditions for extended periods may affect device reliability.
(2) Currents are positive into, negative out of the specified terminal. Consult the packaging section of the *Power Supply Control Products Data Book* for thermal limitations and considerations of packages.

6.2 ESD Ratings

			VALUE	UNIT
$V_{(ESD)}$	Electrostatic discharge	Human-body model (HBM), per ANSI/ESDA/JEDEC JS-001[(1)]	±1500	V
		Charged-device model (CDM), per JEDEC specification JESD22-C101[(2)]	±1500	

(1) JEDEC document JEP155 states that 500-V HBM allows safe manufacturing with a standard ESD control process.
(2) JEDEC document JEP157 states that 250-V CDM allows safe manufacturing with a standard ESD control process.

6.3 Recommended Operating Conditions

over operating free-air temperature range (unless otherwise noted)

			MIN	MAX	UNIT
V_{DD}	Supply voltage	UCCx808-1	13	14	V
		UCCx808-2	5	14	
T_J	Junction temperature	UCC2808-x	–40	85	°C
		UCC3808-x	0	70	

6.4 Thermal Information

THERMAL METRIC[(1)]		UCCx808A		UCC2808A-x UCC3808A-2	UNIT
		D (SOIC)	P (PDIP)	PW (TSSOP)	
		8 PINS	8 PINS	8 PINS	
$R_{\theta JA}$	Junction-to-ambient thermal resistance	105.4	57	151.9	°C/W
$R_{\theta JC(top)}$	Junction-to-case (top) thermal resistance	47.9	49.6	36.5	°C/W
$R_{\theta JB}$	Junction-to-board thermal resistance	46.5	34.3	81.5	°C/W
ψ_{JT}	Junction-to-top characterization parameter	8.7	19.5	1.7	°C/W
ψ_{JB}	Junction-to-board characterization parameter	45.9	34.2	79.6	°C/W
$R_{\theta JC(bot)}$	Junction-to-case (bottom) thermal resistance	—	—	—	°C/W

(1) For more information about traditional and new thermal metrics, see the *Semiconductor and IC Package Thermal Metrics* application report.

Copyright © 1999–2018, Texas Instruments Incorporated

6.5 Electrical Characteristics

T_A = 0°C to 70°C for the UCC3808A-x and –40°C to +85°C for the UCC2808A-x, VDD = 10 V[1], 1-µF capacitor from VDD to GND, R = 22 kΩ, C = 330 pF, and $T_A = T_J$ (unless otherwise noted)

PARAMETER	TEST CONDITIONS	MIN	TYP	MAX	UNIT
OSCILLATOR					
Oscillator frequency		175	194	213	kHz
Oscillator amplitude/VDD[2]		0.44	0.5	0.56	V/V
ERROR AMPLIFIER					
Input voltage	COMP = 2 V	1.95	2	2.05	V
Input bias current		–1		1	µA
Open loop voltage gain		60	80		dB
COMP sink current	FB = 2.2 V, COMP = 1 V	0.3	2.5		mA
COMP source current	FB = 1.3 V, COMP = 3.5 V	–0.2	–0.5		mA
PWM					
Maximum duty cycle	Measured at OUTA or OUTB	48%	49%	50%	
Minimum duty cycle	COMP = 0 V			0%	
CURRENT SENSE					
Gain[3]		1.9	2.2	2.5	V/V
Maximum input signal	COMP = 5 V[4]	0.45	0.5	0.55	V
CS to output delay	COMP = 3.5 V, CS from 0 mV to 600 mV		100	200	ns
CS source current		–200			nA
CS sink current	CS = 0.5 V, RC = 5.5 V[5]	5	10		mA
Over current threshold		0.7	0.75	0.8	V
COMP to CS offset	CS = 0 V	0.35	0.8	1.2	V
OUTPUT					
OUT low level	I = 100 mA		0.5	1	V
OUT high level	I = –50 mA, VDD – OUT		0.5	1	V
Rise time	C_L = 1 nF		25	60	ns
Fall time	C_L = 1 nF		25	60	ns
UNDERVOLTAGE LOCKOUT					
Start threshold	UCCx808A-1[1]	11.5	12.5	13.5	V
	UCCx808A-2	4.1	4.3	4.5	
Minimum operating voltage after start	UCCx808A-1	7.6	8.3	9	V
	UCCx808A-2	3.9	4.1	4.3	
Hysteresis	UCCx808A-1	3.5	4.2	5.1	V
	UCCx808A-2	0.1	0.2	0.3	
SOFT START					
COMP rise time	FB = 1.8 V, rise from 0.5 V to 4 V		3.5	20	ms
OVERALL					
Start-up current	VDD < start threshold		130	260	µA
Operating supply current	FB = 0 V, CS = 0 V[1][6]		1	2	mA
VDD zener shunt voltage	IDD = 10 mA[7]	13	14	15	V

(1) For UCCx808A-1, set VDD above the start threshold before setting at 10 V.
(2) Measured at RC. Signal amplitude tracks VDD.
(3) Gain is defined by: $A = \Delta V_{COMP} / \Delta V_{CS}$, $0\ V \le V_{CS} \le 0.4\ V$.
(4) Parameter measured at trip point of latch with FB at 0 V.
(5) The internal current sink on the CS pin is designed to discharge an external filter capacitor. It is not intended to be a DC sink path.
(6) Does not include current in the external oscillator network.
(7) Start threshold and Zener shunt threshold track one another.

Copyright © 1999–2018, Texas Instruments Incorporated

6.6 Typical Characteristics

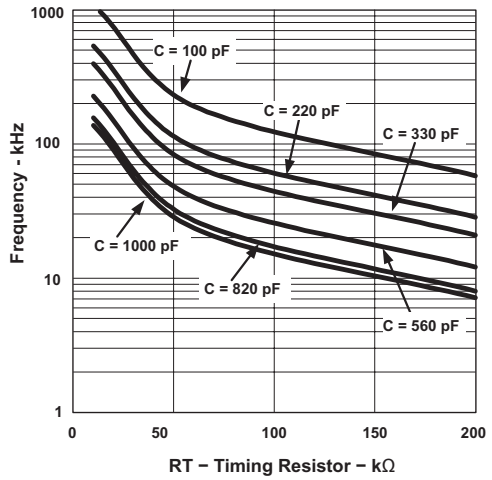

Figure 1. Oscillator Frequency vs External RC Values

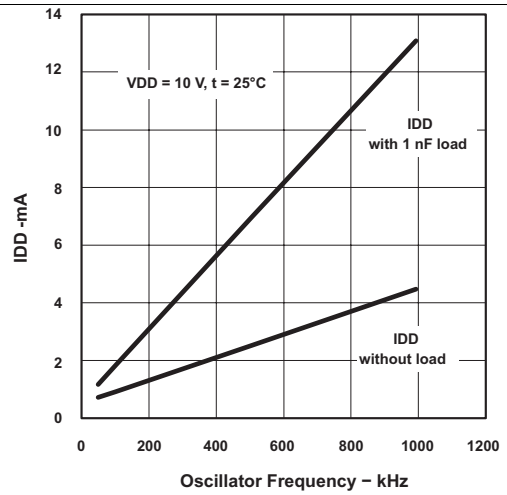

Figure 2. IDD vs Oscillator Frequency

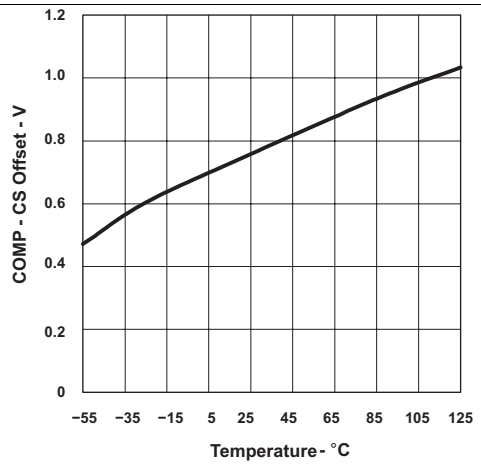

Figure 3. COMP to CS Offset vs Temperature

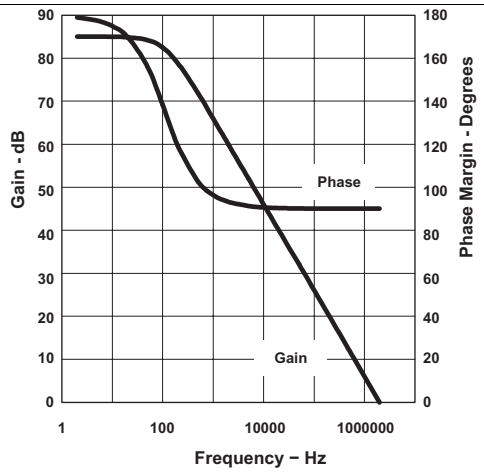

Figure 4. Error Amplifier Gain and Phase Response vs Frequency

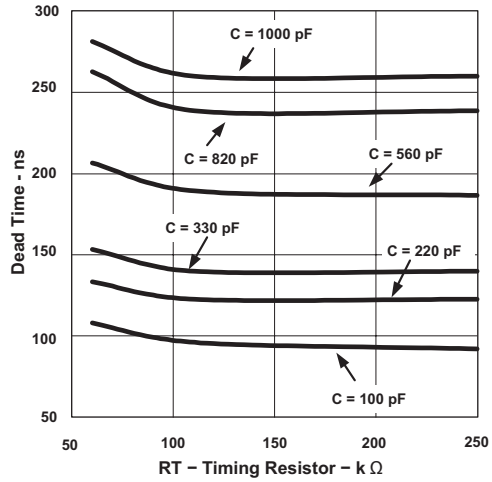

Figure 5. Output Dead Time vs External RC Values

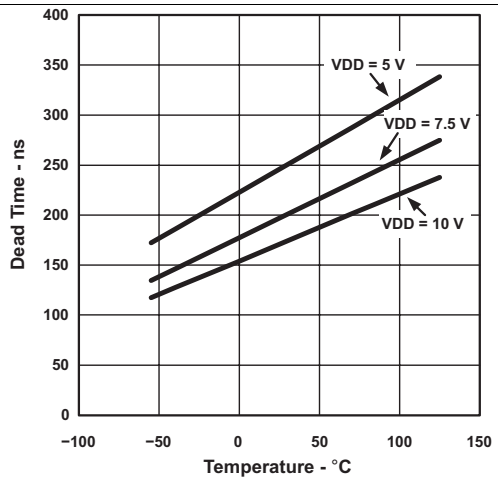

Figure 6. Dead Time vs Temperature

Copyright © 1999–2018, Texas Instruments Incorporated

Typical Characteristics (continued)

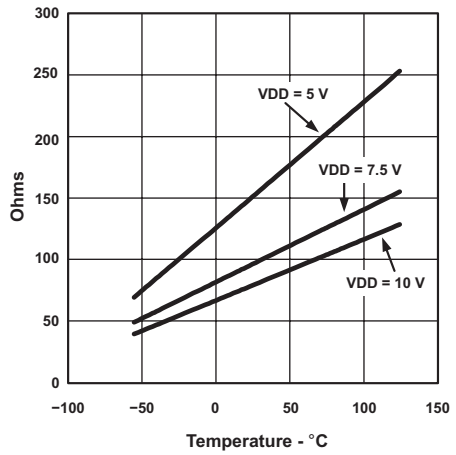

Figure 7. RC $R_{DS(on)}$ vs Temperature

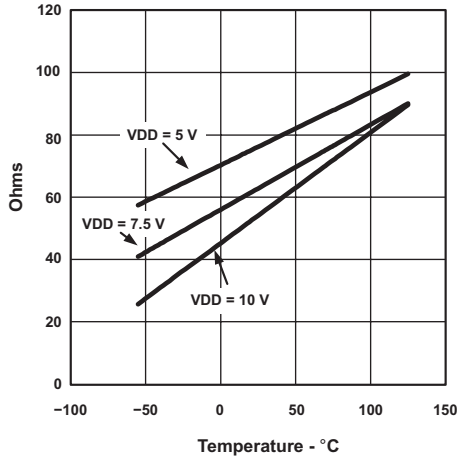

Figure 8. CS $R_{DS(on)}$ vs Temperature

Copyright © 1999–2018, Texas Instruments Incorporated

7 Detailed Description

7.1 Overview

The UCCx808A-x device is a highly integrated, low-power current mode push-pull PWM controller. The controller employs low starting current and an internal control algorithm that offers accurate output voltage regulation in the presence of line and load variations. The UCCx808A-x family of parts has UVLO thresholds and hysteresis options for off-line and battery-powered systems.

Table 1. Undervoltage Lockout Levels

PART NUMBER	TURNON THRESHOLD	TURNOFF THRESHOLD
UCCx808A-1	12.5	8.3
UCCx808A-1	4.3	4.1

7.2 Functional Block Diagrams

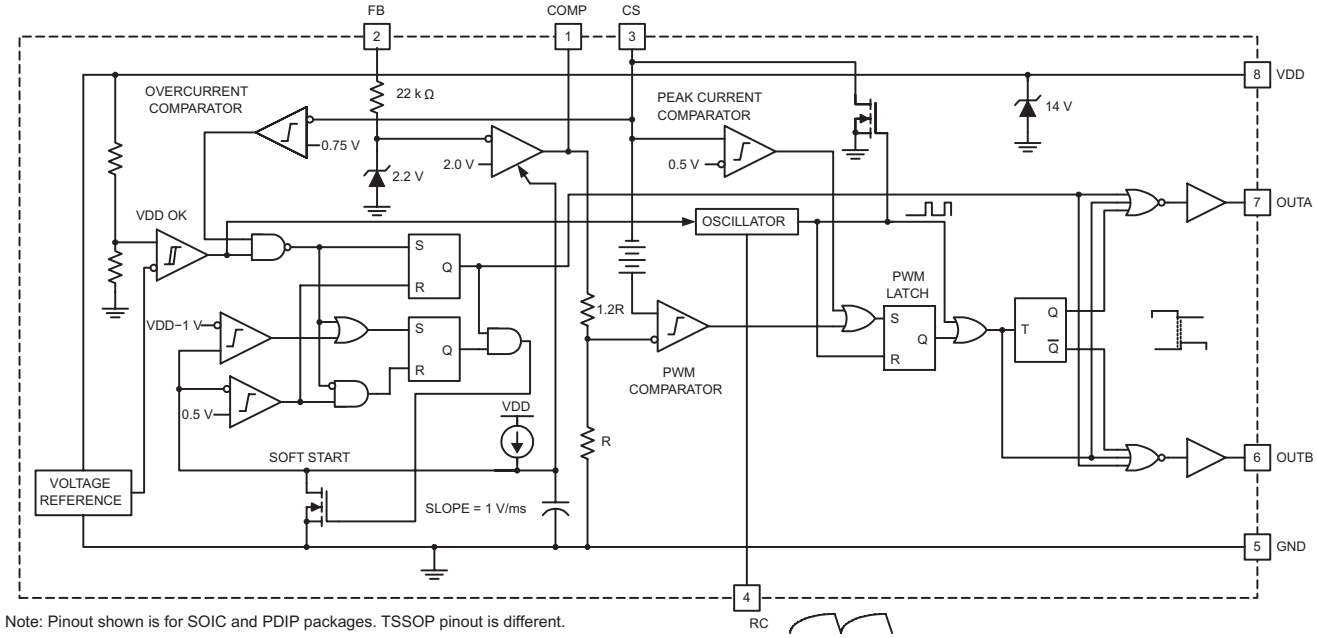

Note: Pinout shown is for SOIC and PDIP packages. TSSOP pinout is different.

Copyright © 2016, Texas Instruments Incorporated

The oscillator generates a sawtooth waveform on RC. During the RC rise time, the output stages alternate on time, but both stages are off during the RC fall time. The output stages switch a 1/2 the oscillator frequency, with ensured duty cycle of < 50% for both outputs.

Figure 9. Block Diagram

Functional Block Diagrams (continued)

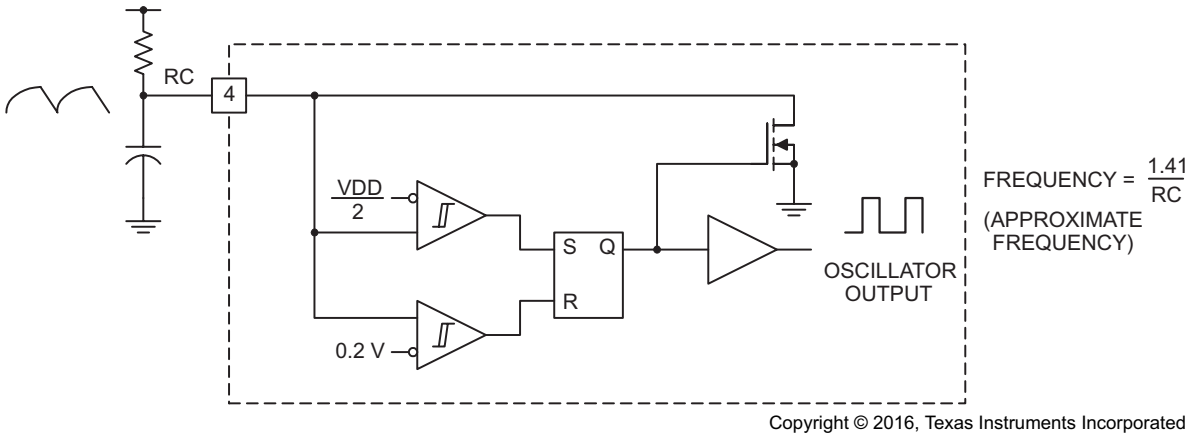

Figure 10. Block Diagram of Oscillator

7.3 Feature Description

7.3.1 Pin Descriptions

7.3.1.1 COMP

The COMP pin is the output of the error amplifier and the input of the PWM comparator. The error amplifier in the UCC3808 is a true low-output impedance, 2-MHz operational amplifier. As such, the COMP pin can both source and sink current. However, the error amplifier is internally current limited, so that zero duty cycle can be externally forced by pulling COMP to GND.

The UCC3808 family features built-in full cycle soft start. Soft start is implemented as a clamp on the maximum COMP voltage.

7.3.1.2 CS

The input to the PWM, peak current, and overcurrent comparators. The overcurrent comparator is only intended for fault sensing. Exceeding the overcurrent threshold causes a soft-start cycle.

7.3.1.3 FB

The inverting input to the error amplifier. For best stability, keep FB lead length as short as possible and FB stray capacitance as small as possible.

7.3.1.4 GND

Reference ground and power ground for all functions. Because of high currents, and high-frequency operation of the UCC3808, a low-impedance printed-circuit board ground plane is highly recommended.

7.3.1.5 OUTA and OUTB

Alternating high current output stages. Both stages are capable of driving the gate of a power MOSFET. Each stage is capable of 500-mA peak source current, and 1-A peak sink current.

The output stages switch at half the oscillator frequency, in a push-pull configuration. When the voltage on the RC pin is rising, one of the two outputs is high, but during fall time, both outputs are off. This dead time between the two outputs, along with a slower output rise time than fall time, insures that the two outputs can not be on at the same time. This dead time is typically 60 ns to 200 ns and depends upon the values of the timing capacitor and resistor.

The high-current output drivers consist of MOSFET output devices, which switch from VDD to GND. Each output stage also provides a very low impedance to overshoot and undershoot. This means that in many cases, external Schottky clamp diodes are not required.

Copyright © 1999–2018, Texas Instruments Incorporated

Feature Description (continued)

7.3.1.6 RC

The oscillator programming pin. The oscillator of the UCC3808-x tracks VDD and GND internally, so that variations in power supply rails minimally affect frequency stability. Figure 10 shows the oscillator block diagram.

Only two components are required to program the oscillator: a resistor (tied to the VDD and RC), and a capacitor (tied to the RC and GND). The approximate oscillator frequency is determined by Equation 1.

$$f_{OSCILLATOR} = \frac{1.41}{RC}$$

where

- frequency is in Hz
- resistance in Ω
- capacitance in Farads (1)

The recommended range of timing resistors is between 10 kΩ and 200 kΩ and range of timing capacitors is between 100 pF and 1000 pF. Timing resistors less than 10 kΩ must be avoided.

For best performance, keep the timing capacitor lead to GND as short as possible, the timing resistor lead from VDD as short as possible, and the leads between timing components and RC as short as possible. Separate ground and VDD traces to the external timing network are encouraged.

7.3.1.7 VDD

The power input connection for this device. Although quiescent VDD current is very low, total supply current is higher, depending on OUTA and OUTB current, and the programmed oscillator frequency. Total VDD current is the sum of quiescent VDD current and the average OUT current. Knowing the operating frequency and the MOSFET gate charge (Qg), average OUT current can be calculated with Equation 2.

$$I_{OUT} = Q_g \times F$$

where

- F is frequency (2)

To prevent noise problems, bypass VDD to GND with a ceramic capacitor as close to the chip as possible along with an electrolytic capacitor. TI recommends a 1-µF decoupling capacitor.

7.4 Device Functional Modes

7.4.1 VCC

When VCC rises above 12.5 V (for the UCCx808A-1) or above 4.3 V (for the UCCx808-2) the device is enabled. When any fault conditions are cleared, a soft-start condition is initiated and the gate driver outputs begin switching.

When VCC drops below 8.3 V (for the UCCx808-1) or 4.1 V (for the UCCx808-2) the device enters the UVLO protection mode and both gate drivers are actively pulled low.

7.4.2 Push-Pull or Half-Bridge Function

Because the device provides alternate 180° out-of-phase gate drive signals (OUTA and OUTB), it may be used as a controller for the push-pull or half-bridge topologies. For the half-bridge topology the UCCx808A-x requires a an external high side gate driver or pulse transformer on one or both of the OUTA and OUTB signals.

Copyright © 1999–2018, Texas Instruments Incorporated

8 Application and Implementation

NOTE

Information in the following applications sections is not part of the TI component specification, and TI does not warrant its accuracy or completeness. TI's customers are responsible for determining suitability of components for their purposes. Customers should validate and test their design implementation to confirm system functionality.

8.1 Application Information

A 200-kHz push-pull application circuit with a full-wave rectifier is shown in Figure 11. The output, V_O, provides 5 V at 50 W maximum and is electrically isolated from the input. Because the UCC3808A is a peak-current-mode controller the 2N2907 emitter following amplifier (buffers the CT waveform) provides slope compensation which is necessary for duty ratios greater than 50%. Capacitor decoupling is very important with a single ground IC controller, and a 1 µF is suggested as close to the IC as possible. The controller supply is a series RC for start-up, paralleled with a bias winding on the output inductor used in steady-state operation.

Isolation is provided by an optocoupler with regulation done on the secondary side using the TL431 adjustable precision shunt regulator. Small signal compensation with tight voltage regulation is achieved using this part on the secondary side. Many choices exist for the output inductor depending on cost, volume, and mechanical strength. Several design options are iron powder, molypermalloy (MPP), or a ferrite core with an air gap as shown here. The main power transformer has a Magnetics Inc. ER28 size core made of P material for efficient operation at this frequency and temperature. The input voltage may range from 36 Vdc to 72 Vdc.

8.2 Typical Application

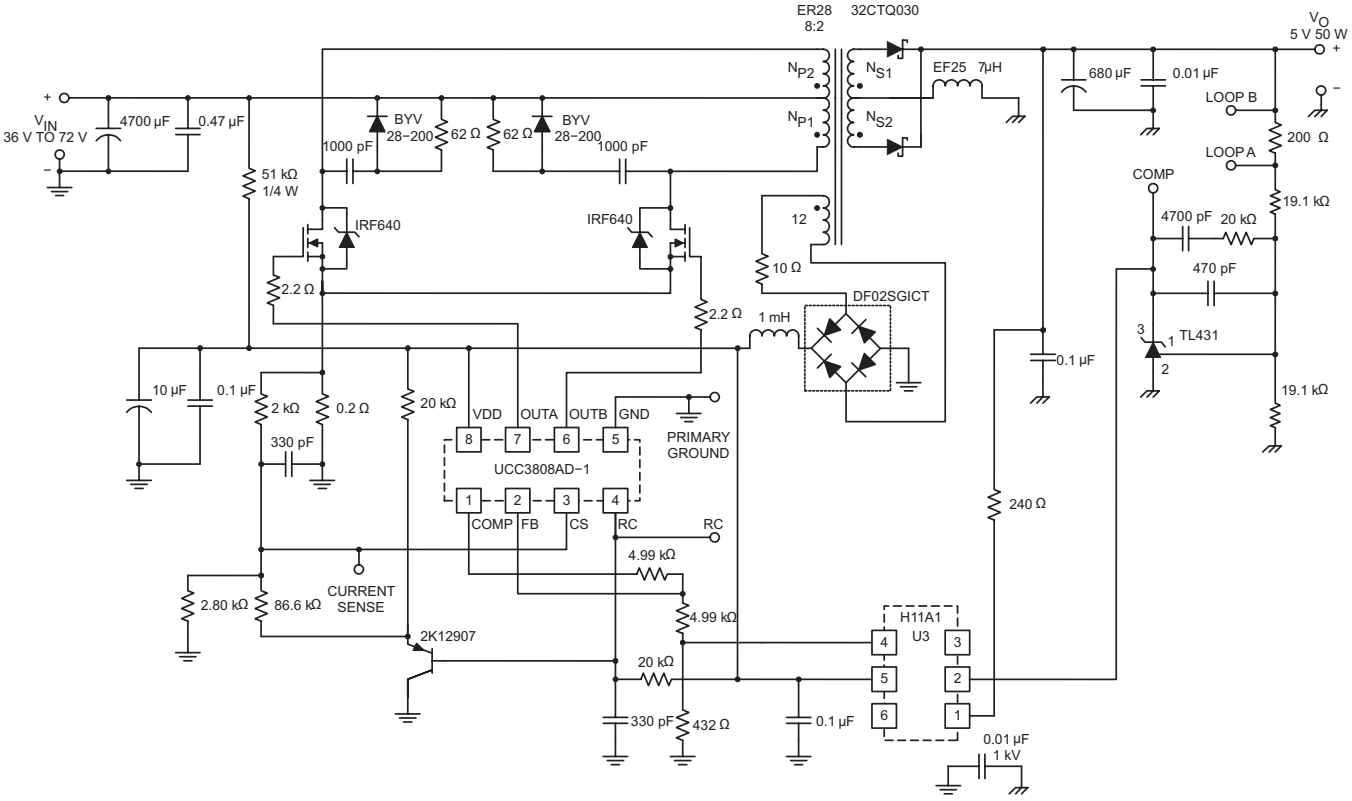

Copyright © 2016, Texas Instruments Incorporated

Figure 11. Typical Application Diagram: 48-Vin, 5-V, 50-W Output

Copyright © 1999–2018, Texas Instruments Incorporated

Typical Application (continued)

8.2.1 Design Requirements

Table 2 lists the design parameters for the UCC3808A-x.

Table 2. Design Parameters

PARAMETER	VALUE
Output voltage	5 V
Rated output power	50 W
Input DC voltage range	36 V to 72 V
Switching frequency	210 kHz

8.2.2 Detailed Design Procedure

The output, VO, provides 5 V at 50 W maximum and is electrically isolated from the input. Because the UCC3808A is a peak current mode controller, the 2N2907 emitter follower amplifier buffers the oscillator waveform (RC pin) and provides slope compensation to the current sense (CS) input. This is necessary for duty cycle ratios of greater than 50%.

Capacitor decoupling is provided on the VDD pin. TI recommends using a minimum decoupling capacitance of 10-µF electrolytic and 0.1-µF ceramic. The ceramic capacitor must be as close to the VDD pin as possible. The UCC3808A is initially powered up from the 36-V to 72-V input supply . Once the power supply has started, the bias supply is provided by an auxiliary winding on the main power transformer.

Isolation is provided by an optocoupler with regulation done on the secondary side using the TL431 precision programmable reference. The internal error amplifier of the UCC3808A is set up as a unity gain amplifier and the compensation network is provided on the secondary side.

Many choices exist for the output inductor depending on cost and size constraints. Design options are powdered iron, molypermalloy or the ferrite core option used in this design. The power transformer is a low profile design, EFD25 size, using the Magnetics Inc. P material. This material is a good choice for low power loss at high switching frequency.

The switching frequency is set at 210 kHz with the RC network on the RC pin.

8.2.3 Application Curves

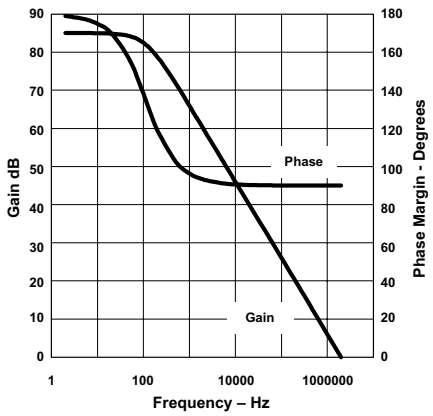

Figure 12. Error Amplifier Gain and Phase Response vs Frequency

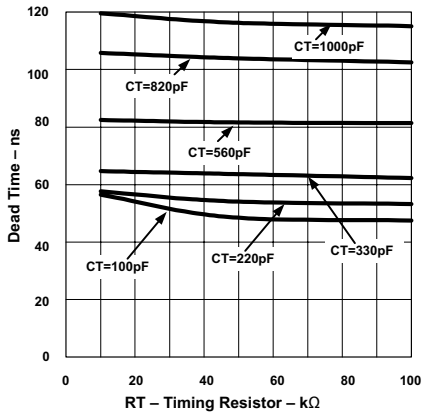

Figure 13. Dead Time vs Timing Resistor

9 Power Supply Recommendations

The VDD power terminal for the device requires the placement of electrolytic capacitor as energy storage capacitor because of the 1-A drive capability of the UCCx808A-x controller. Also a low-ESR noise decoupling capacitor is required and it must be placed as close as possible to the VDD and GND pins. Ceramic capacitors with stable dielectric characteristics over temperature are recommended. X7R is a suitable dielectric material for use here.

TI recommends a 10-µF, 25-V electrolytic capacitor part.

10 Layout

10.1 Layout Guidelines

1. Place the VDD capacitor as close as possible between the VDD pin and GND of the UCCx808A-x, tracked directly to both pins.
2. A small, external filter capacitor is recommended on the CS pin. Track the filter capacitor as directly as possible from the CS to GND pins.
3. The tracking and layout of the FB pin and connecting components is critical to minimizing noise pickup and interference. Reduce the total surface area of traces on the FB net to a minimum.
4. The OUTA and OUTB pins have a high-current source and sink capability. An external gate resistor is recommended to damp oscillations. A value of around a few Ohms is recommended. A pulldown resistor on the gate to source is recommended to prevent the MOSFET gate from floating on if there is an open-circuit fault in the gate drive path.

10.2 Layout Example

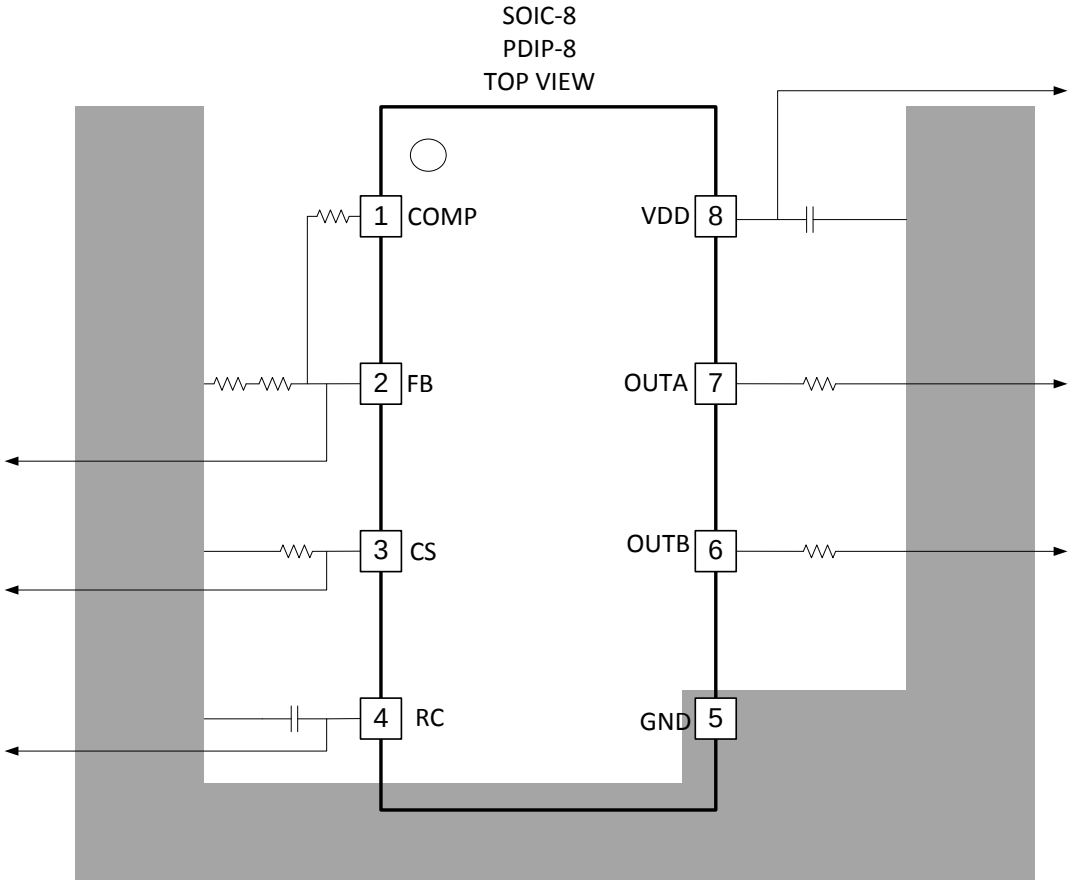

Figure 14. Recommended Layout

版权 © 1999–2018, Texas Instruments Incorporated

11 器件和文档支持

11.1 文档支持

11.1.1 相关文档

请参阅如下相关文档：

电源控制产品数据表

11.2 相关链接

下表列出了快速访问链接。类别包括技术文档、支持与社区资源、工具和软件，以及申请样片或购买产品的快速链接。

表 **3.** 相关链接

器件	产品文件夹	立即订购	技术文档	工具与软件	支持和社区
UCC2808A-1	请单击此处	请单击此处	请单击此处	请单击此处	请单击此处
UCC2808A-2	请单击此处	请单击此处	请单击此处	请单击此处	请单击此处
UCC3808A-1	请单击此处	请单击此处	请单击此处	请单击此处	请单击此处
UCC3808A-2	请单击此处	请单击此处	请单击此处	请单击此处	请单击此处

11.3 接收文档更新通知

要接收文档更新通知，请导航至 TI.com.cn 上的器件产品文件夹。单击右上角的*通知我* 进行注册，即可每周接收产品信息更改摘要。有关更改的详细信息，请查看任何已修订文档中包含的修订历史记录。

11.4 社区资源

下列链接提供到 TI 社区资源的连接。链接的内容由各个分销商“按照原样”提供。这些内容并不构成 TI 技术规范，并且不一定反映 TI 的观点；请参阅 TI 的 《使用条款》。

TI E2E™ 在线社区 ***TI 的工程师对工程师 (E2E) 社区。***此社区的创建目的在于促进工程师之间的协作。在 e2e.ti.com 中，您可以咨询问题、分享知识、拓展思路并与同行工程师一道帮助解决问题。

设计支持 ***TI 参考设计支持*** 可帮助您快速查找有帮助的 E2E 论坛、设计支持工具以及技术支持的联系信息。

11.5 商标

E2E is a trademark of Texas Instruments.
All other trademarks are the property of their respective owners.

11.6 静电放电警告

ESD 可能会损坏该集成电路。德州仪器 (TI) 建议通过适当的预防措施处理所有集成电路。如果不遵守正确的处理措施和安装程序，可能会损坏集成电路。

ESD 的损坏小至导致微小的性能降级，大至整个器件故障。 精密的集成电路可能更容易受到损坏，这是因为非常细微的参数更改都可能会导致器件与其发布的规格不相符。

11.7 术语表

SLYZ022 — *TI 术语表*。

这份术语表列出并解释术语、缩写和定义。

12 机械、封装和可订购信息

以下页面包含机械、封装和可订购信息。这些信息是指定器件的最新可用数据。数据如有变更，恕不另行通知，且不会对此文档进行修订。如需获取此数据表的浏览器版本，请查阅左侧的导航栏。

PACKAGING INFORMATION

Orderable Device	Status (1)	Package Type	Package Drawing	Pins	Package Qty	Eco Plan (2)	Lead finish/ Ball material (6)	MSL Peak Temp (3)	Op Temp (°C)	Device Marking (4/5)	Samples
UCC2808AD-1	ACTIVE	SOIC	D	8	75	RoHS & Green	NIPDAU	Level-1-260C-UNLIM	-40 to 85	2808A-1	Samples
UCC2808AD-2	ACTIVE	SOIC	D	8	75	RoHS & Green	NIPDAU	Level-1-260C-UNLIM	-40 to 85	2808A-2	Samples
UCC2808AD-2G4	ACTIVE	SOIC	D	8	75	RoHS & Green	NIPDAU	Level-1-260C-UNLIM	-40 to 85	2808A-2	Samples
UCC2808ADTR-1	ACTIVE	SOIC	D	8	2500	RoHS & Green	NIPDAU	Level-1-260C-UNLIM	-40 to 85	2808A-1	Samples
UCC2808ADTR-1G4	ACTIVE	SOIC	D	8	2500	RoHS & Green	NIPDAU	Level-1-260C-UNLIM	-40 to 85	2808A-1	Samples
UCC2808ADTR-2	ACTIVE	SOIC	D	8	2500	RoHS & Green	NIPDAU	Level-1-260C-UNLIM	-40 to 85	2808A-2	Samples
UCC2808ADTR-2G4	ACTIVE	SOIC	D	8	2500	RoHS & Green	NIPDAU	Level-1-260C-UNLIM	-40 to 85	2808A-2	Samples
UCC2808AN-1	ACTIVE	PDIP	P	8	50	RoHS & Green	NIPDAU	N / A for Pkg Type	-40 to 85	UCC2808A N-1	Samples
UCC2808AN-2	ACTIVE	PDIP	P	8	50	RoHS & Green	NIPDAU	N / A for Pkg Type	-40 to 85	UCC2808A N-2	Samples
UCC2808AN-2G4	ACTIVE	PDIP	P	8	50	RoHS & Green	NIPDAU	N / A for Pkg Type	-40 to 85	UCC2808A N-2	Samples
UCC2808APW-1	ACTIVE	TSSOP	PW	8	150	RoHS & Green	NIPDAU	Level-2-260C-1 YEAR	-40 to 85	2808A1	Samples
UCC2808APW-1G4	ACTIVE	TSSOP	PW	8	150	RoHS & Green	NIPDAU	Level-2-260C-1 YEAR	-40 to 85	2808A1	Samples
UCC2808APW-2	ACTIVE	TSSOP	PW	8	150	RoHS & Green	NIPDAU	Level-2-260C-1 YEAR	-40 to 85	2808A2	Samples
UCC2808APWTR-2	ACTIVE	TSSOP	PW	8	2000	RoHS & Green	NIPDAU	Level-2-260C-1 YEAR	-40 to 85	2808A2	Samples
UCC3808AD-1	ACTIVE	SOIC	D	8	75	RoHS & Green	NIPDAU	Level-1-260C-UNLIM	0 to 70	3808A-1	Samples
UCC3808AD-1G4	ACTIVE	SOIC	D	8	75	RoHS & Green	NIPDAU	Level-1-260C-UNLIM	0 to 70	3808A-1	Samples
UCC3808AD-2	ACTIVE	SOIC	D	8	75	RoHS & Green	NIPDAU	Level-1-260C-UNLIM	0 to 70	3808A-2	Samples
UCC3808ADTR-1	ACTIVE	SOIC	D	8	2500	RoHS & Green	NIPDAU	Level-1-260C-UNLIM	0 to 70	3808A-1	Samples
UCC3808ADTR-1G4	ACTIVE	SOIC	D	8	2500	RoHS & Green	NIPDAU	Level-1-260C-UNLIM	0 to 70	3808A-1	Samples

Orderable Device	Status (1)	Package Type	Package Drawing	Pins	Package Qty	Eco Plan (2)	Lead finish/ Ball material (6)	MSL Peak Temp (3)	Op Temp (°C)	Device Marking (4/5)	Samples
UCC3808ADTR-2	ACTIVE	SOIC	D	8	2500	RoHS & Green	NIPDAU	Level-1-260C-UNLIM	0 to 70	3808A-2	Samples
UCC3808AN-1	ACTIVE	PDIP	P	8	50	RoHS & Green	NIPDAU	N / A for Pkg Type	0 to 70	UCC3808A N-1	Samples
UCC3808AN-1G4	ACTIVE	PDIP	P	8	50	RoHS & Green	NIPDAU	N / A for Pkg Type	0 to 70	UCC3808A N-1	Samples
UCC3808AN-2	ACTIVE	PDIP	P	8	50	RoHS & Green	NIPDAU	N / A for Pkg Type	0 to 70	UCC3808A N-2	Samples
UCC3808APW-2	ACTIVE	TSSOP	PW	8	150	RoHS & Green	NIPDAU	Level-2-260C-1 YEAR	0 to 70	3808A2	Samples
UCC3808APWTR-2	ACTIVE	TSSOP	PW	8	2000	RoHS & Green	NIPDAU	Level-2-260C-1 YEAR	0 to 70	3808A2	Samples
UCC3808APWTR-2G4	ACTIVE	TSSOP	PW	8	2000	RoHS & Green	NIPDAU	Level-2-260C-1 YEAR	0 to 70	3808A2	Samples

(1) The marketing status values are defined as follows:
ACTIVE: Product device recommended for new designs.
LIFEBUY: TI has announced that the device will be discontinued, and a lifetime-buy period is in effect.
NRND: Not recommended for new designs. Device is in production to support existing customers, but TI does not recommend using this part in a new design.
PREVIEW: Device has been announced but is not in production. Samples may or may not be available.
OBSOLETE: TI has discontinued the production of the device.

(2) **RoHS:** TI defines "RoHS" to mean semiconductor products that are compliant with the current EU RoHS requirements for all 10 RoHS substances, including the requirement that RoHS substance do not exceed 0.1% by weight in homogeneous materials. Where designed to be soldered at high temperatures, "RoHS" products are suitable for use in specified lead-free processes. TI may reference these types of products as "Pb-Free".
RoHS Exempt: TI defines "RoHS Exempt" to mean products that contain lead but are compliant with EU RoHS pursuant to a specific EU RoHS exemption.
Green: TI defines "Green" to mean the content of Chlorine (Cl) and Bromine (Br) based flame retardants meet JS709B low halogen requirements of <=1000ppm threshold. Antimony trioxide based flame retardants must also meet the <=1000ppm threshold requirement.

(3) MSL, Peak Temp. - The Moisture Sensitivity Level rating according to the JEDEC industry standard classifications, and peak solder temperature.

(4) There may be additional marking, which relates to the logo, the lot trace code information, or the environmental category on the device.

(5) Multiple Device Markings will be inside parentheses. Only one Device Marking contained in parentheses and separated by a "~" will appear on a device. If a line is indented then it is a continuation of the previous line and the two combined represent the entire Device Marking for that device.

(6) Lead finish/Ball material - Orderable Devices may have multiple material finish options. Finish options are separated by a vertical ruled line. Lead finish/Ball material values may wrap to two lines if the finish value exceeds the maximum column width.

Important Information and Disclaimer: The information provided on this page represents TI's knowledge and belief as of the date that it is provided. TI bases its knowledge and belief on information provided by third parties, and makes no representation or warranty as to the accuracy of such information. Efforts are underway to better integrate information from third parties. TI has taken and continues to take reasonable steps to provide representative and accurate information but may not have conducted destructive testing or chemical analysis on incoming materials and chemicals. TI and TI suppliers consider certain information to be proprietary, and thus CAS numbers and other limited information may not be available for release.

In no event shall TI's liability arising out of such information exceed the total purchase price of the TI part(s) at issue in this document sold by TI to Customer on an annual basis.

TAPE AND REEL INFORMATION

REEL DIMENSIONS

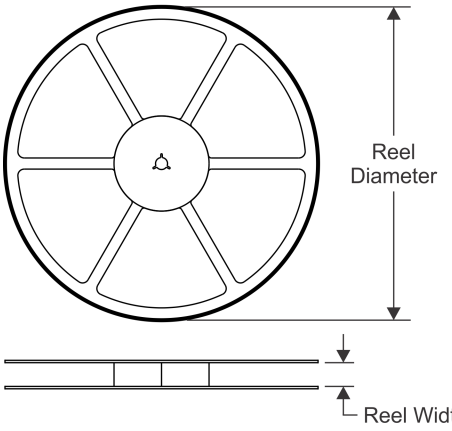

TAPE DIMENSIONS

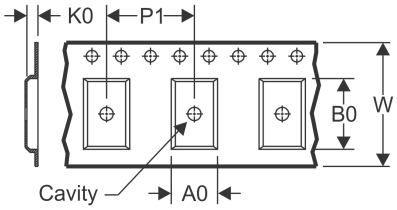

A0	Dimension designed to accommodate the component width
B0	Dimension designed to accommodate the component length
K0	Dimension designed to accommodate the component thickness
W	Overall width of the carrier tape
P1	Pitch between successive cavity centers

QUADRANT ASSIGNMENTS FOR PIN 1 ORIENTATION IN TAPE

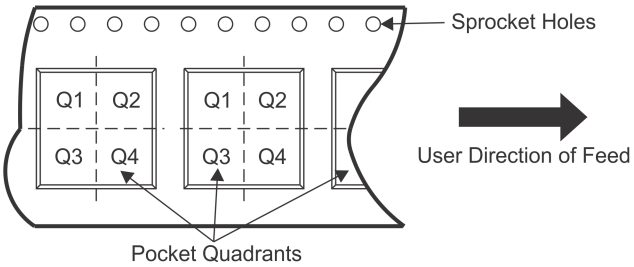

*All dimensions are nominal

Device	Package Type	Package Drawing	Pins	SPQ	Reel Diameter (mm)	Reel Width W1 (mm)	A0 (mm)	B0 (mm)	K0 (mm)	P1 (mm)	W (mm)	Pin1 Quadrant
UCC2808ADTR-1	SOIC	D	8	2500	330.0	12.4	6.4	5.2	2.1	8.0	12.0	Q1
UCC2808ADTR-2	SOIC	D	8	2500	330.0	12.4	6.4	5.2	2.1	8.0	12.0	Q1
UCC2808APWTR-2	TSSOP	PW	8	2000	330.0	12.4	7.0	3.6	1.6	8.0	12.0	Q1
UCC3808ADTR-1	SOIC	D	8	2500	330.0	12.4	6.4	5.2	2.1	8.0	12.0	Q1
UCC3808ADTR-2	SOIC	D	8	2500	330.0	12.4	6.4	5.2	2.1	8.0	12.0	Q1
UCC3808APWTR-2	TSSOP	PW	8	2000	330.0	12.4	7.0	3.6	1.6	8.0	12.0	Q1

TAPE AND REEL BOX DIMENSIONS

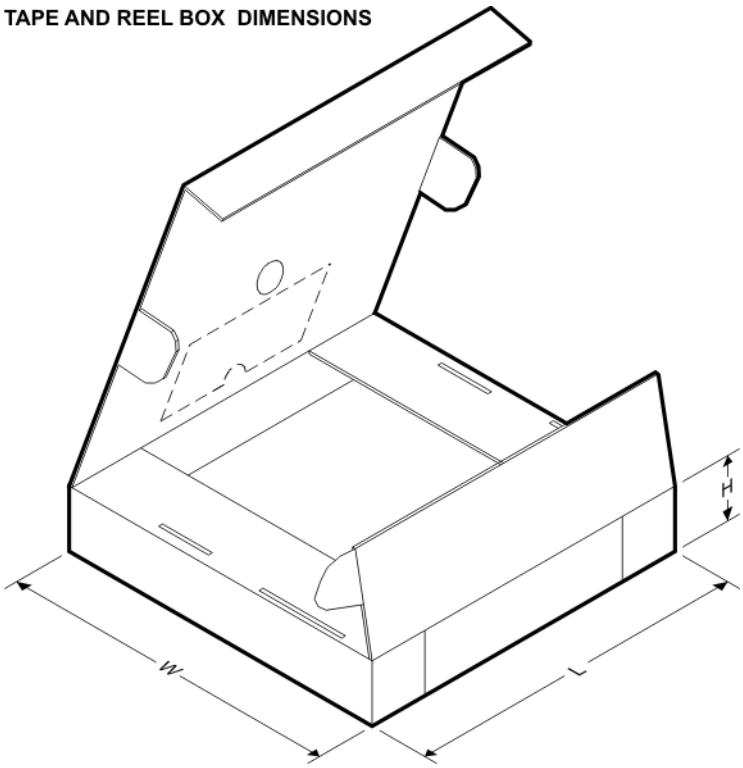

*All dimensions are nominal

Device	Package Type	Package Drawing	Pins	SPQ	Length (mm)	Width (mm)	Height (mm)
UCC2808ADTR-1	SOIC	D	8	2500	340.5	336.1	25.0
UCC2808ADTR-2	SOIC	D	8	2500	340.5	336.1	25.0
UCC2808APWTR-2	TSSOP	PW	8	2000	853.0	449.0	35.0
UCC3808ADTR-1	SOIC	D	8	2500	340.5	336.1	25.0
UCC3808ADTR-2	SOIC	D	8	2500	340.5	336.1	25.0
UCC3808APWTR-2	TSSOP	PW	8	2000	853.0	449.0	35.0

TUBE

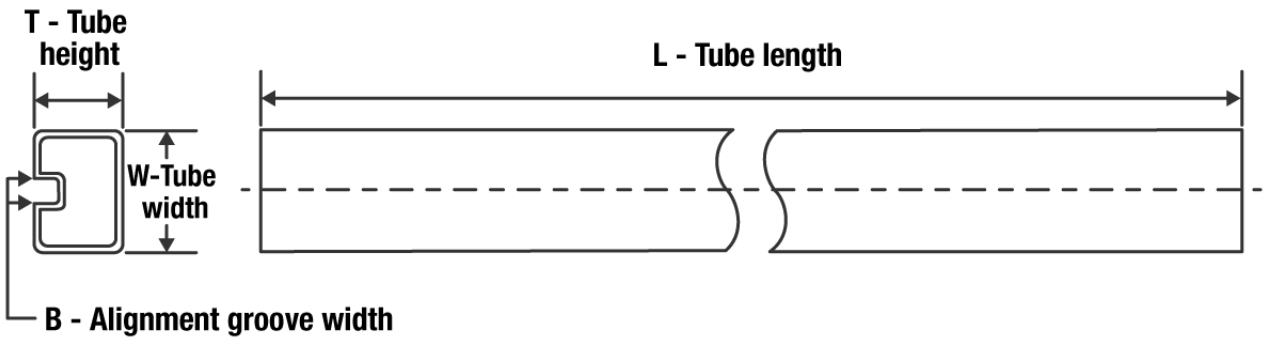

*All dimensions are nominal

Device	Package Name	Package Type	Pins	SPQ	L (mm)	W (mm)	T (µm)	B (mm)
UCC2808AD-1	D	SOIC	8	75	507	8	3940	4.32
UCC2808AD-2	D	SOIC	8	75	507	8	3940	4.32
UCC2808AD-2G4	D	SOIC	8	75	507	8	3940	4.32
UCC2808AN-1	P	PDIP	8	50	506	13.97	11230	4.32
UCC2808AN-2	P	PDIP	8	50	506	13.97	11230	4.32
UCC2808AN-2G4	P	PDIP	8	50	506	13.97	11230	4.32
UCC2808APW-1	PW	TSSOP	8	150	508	8.5	3250	2.8
UCC2808APW-1G4	PW	TSSOP	8	150	508	8.5	3250	2.8
UCC2808APW-2	PW	TSSOP	8	150	508	8.5	3250	2.8
UCC3808AD-1	D	SOIC	8	75	507	8	3940	4.32
UCC3808AD-1G4	D	SOIC	8	75	507	8	3940	4.32
UCC3808AD-2	D	SOIC	8	75	507	8	3940	4.32
UCC3808AN-1	P	PDIP	8	50	506	13.97	11230	4.32
UCC3808AN-1G4	P	PDIP	8	50	506	13.97	11230	4.32
UCC3808AN-2	P	PDIP	8	50	506	13.97	11230	4.32
UCC3808APW-2	PW	TSSOP	8	150	508	8.5	3250	2.8

重要声明和免责声明

TI“按原样”提供技术和可靠性数据（包括数据表）、设计资源（包括参考设计）、应用或其他设计建议、网络工具、安全信息和其他资源，不保证没有瑕疵且不做出任何明示或暗示的担保，包括但不限于对适销性、某特定用途方面的适用性或不侵犯任何第三方知识产权的暗示担保。

这些资源可供使用 TI 产品进行设计的熟练开发人员使用。您将自行承担以下全部责任：(1) 针对您的应用选择合适的 TI 产品，(2) 设计、验证并测试您的应用，(3) 确保您的应用满足相应标准以及任何其他功能安全、信息安全、监管或其他要求。

这些资源如有变更，恕不另行通知。TI 授权您仅可将这些资源用于研发本资源所述的 TI 产品的应用。严禁对这些资源进行其他复制或展示。您无权使用任何其他 TI 知识产权或任何第三方知识产权。您应全额赔偿因在这些资源的使用中对 TI 及其代表造成的任何索赔、损害、成本、损失和债务，TI 对此概不负责。

TI 提供的产品受 TI 的销售条款或 ti.com 上其他适用条款/TI 产品随附的其他适用条款的约束。TI 提供这些资源并不会扩展或以其他方式更改 TI 针对 TI 产品发布的适用的担保或担保免责声明。

TI 反对并拒绝您可能提出的任何其他或不同的条款。

邮寄地址：Texas Instruments, Post Office Box 655303, Dallas, Texas 75265
Copyright © 2022，德州仪器 (TI) 公司