XTR106

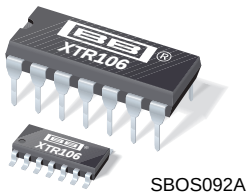

SBOS092A – JUNE 1998 – REVISED NOVEMBER 2003

4-20mA CURRENT TRANSMITTER with Bridge Excitation and Linearization

FEATURES

- LOW TOTAL UNADJUSTED ERROR
- 2.5V, 5V BRIDGE EXCITATION REFERENCE
- 5.1V REGULATOR OUTPUT
- LOW SPAN DRIFT: ±25ppm/°C max
- LOW OFFSET DRIFT: 0.25µV/°C
- HIGH PSR: 110dB min
- HIGH CMR: 86dB min
- WIDE SUPPLY RANGE: 7.5V to 36V
- 14-PIN DIP AND SO-14 SURFACE-MOUNT

APPLICATIONS

- PRESSURE BRIDGE TRANSMITTERS
- STRAIN GAGE TRANSMITTERS
- TEMPERATURE BRIDGE TRANSMITTERS
- INDUSTRIAL PROCESS CONTROL
- SCADA REMOTE DATA ACQUISITION
- REMOTE TRANSDUCERS
- WEIGHING SYSTEMS
- ACCELEROMETERS

DESCRIPTION

The XTR106 is a low cost, monolithic 4-20mA, two-wire current transmitter designed for bridge sensors. It provides complete bridge excitation (2.5V or 5V reference), instrumentation amplifier, sensor linearization, and current output circuitry. Current for powering additional external input circuitry is available from the V_{REG} pin.

The instrumentation amplifier can be used over a wide range of gain, accommodating a variety of input signal types and sensors. Total unadjusted error of the complete current transmitter, including the linearized bridge, is low enough to permit use without adjustment in many applications. The XTR106 operates on loop power supply voltages down to 7.5V.

Linearization circuitry provides second-order correction to the transfer function by controlling bridge excitation voltage. It provides up to a 20:1 improvement in nonlinearity, even with low cost transducers.

The XTR106 is available in 14-pin plastic DIP and SO-14 surface-mount packages and is specified for the –40°C to +85°C temperature range. Operation is from –55°C to +125°C.

BRIDGE NONLINEARITY CORRECTION
USING XTR106

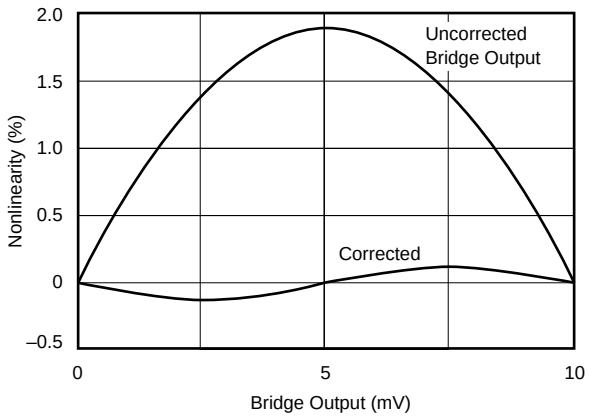

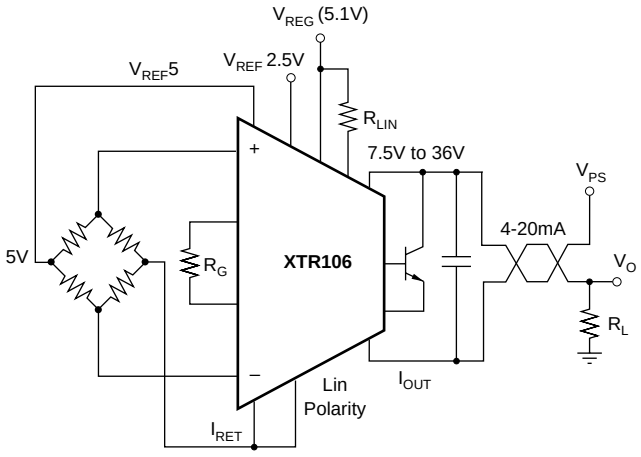

Please be aware that an important notice concerning availability, standard warranty, and use in critical applications of Texas Instruments semiconductor products and disclaimers thereto appears at the end of this data sheet.

All trademarks are the property of their respective owners.

PRODUCTION DATA information is current as of publication date. Products conform to specifications per the terms of Texas Instruments standard warranty. Production processing does not necessarily include testing of all parameters.

Copyright © 1998-2003, Texas Instruments Incorporated

SPECIFICATIONS

At T_A = +25°C, V+ = 24V, and TIP29C external transistor, unless otherwise noted.

PARAMETER		CONDITIONS	XTR106P, U			XTR106PA, UA			UNITS
			MIN	TYP	MAX	MIN	TYP	MAX	
OUTPUT									
Output Current Equation	I_O			$I_O = V_{IN} \bullet (40/R_G) + 4mA$, V_{IN} in Volts, R_G in Ω					A
Output Current, Specified Range			4		20	*		*	mA
Over-Scale Limit	I_{OVER}		24	28	30	*	*	*	mA
Under-Scale Limit	I_{UNDER}	I_{REG} = 0, I_{REF} = 0	1	1.6	2.2	*	*	*	mA
		$I_{REF} + I_{REG}$ = 2.5mA	2.9	3.4	4	*	*	*	mA
ZERO OUTPUT[1]	I_{ZERO}	V_{IN} = 0V, R_G = ∞		4			*		mA
Initial Error				±5	±25		*	±50	µA
vs Temperature		T_A = –40°C to +85°C		±0.07	±0.9		*	*	µA/°C
vs Supply Voltage, V+		V+ = 7.5V to 36V		0.04	0.2		*	*	µA/V
vs Common-Mode Voltage (CMRR)		V_{CM} = 1.1V to 3.5V[5]		0.02			*		µA/V
vs V_{REG} (I_O)				0.8			*		µA/mA
Noise: 0.1Hz to 10Hz	i_n			0.035			*		µAp-p
SPAN									
Span Equation (Transconductance)	S			$S = 40/R_G$			*		A/V
Untrimmed Error		Full Scale (V_{IN}) = 50mV		±0.05	±0.2		*	±0.4	%
vs Temperature[2]		T_A = –40°C to +85°C		±3	±25		*	*	ppm/°C
Nonlinearity: Ideal Input[3]		Full Scale (V_{IN}) = 50mV		±0.001	±0.01		*	*	%
INPUT[4]									
Offset Voltage	V_{OS}	V_{CM} = 2.5V		±50	±100		*	±250	µV
vs Temperature		T_A = –40°C to +85°C		±0.25	±1.5		*	±3	µV/°C
vs Supply Voltage, V+		V+ = 7.5V to 36V		±0.1	±3		*	*	µV/V
vs Common-Mode Voltage, RTI	CMRR	V_{CM} = 1.1V to 3.5V[5]		±10	±50		*	±100	µV/V
Common-Mode Range[5]	V_{CM}		1.1		3.5	*		*	V
Input Bias Current	I_B			5	25		*	50	nA
vs Temperature		T_A = –40°C to +85°C		20			*		pA/°C
Input Offset Current	I_{OS}			±0.2	±3		*	±10	nA
vs Temperature		T_A = –40°C to +85°C		5			*		pA/°C
Impedance: Differential	Z_{IN}			0.1 || 1			*		GΩ || pF
Common-Mode				5 || 10			*		GΩ || pF
Noise: 0.1Hz to 10Hz	V_n			0.6			*		µVp-p
VOLTAGE REFERENCES[5]		Lin Polarity Connected to V_{REG}, R_{LIN} = 0							
Initial: 2.5V Reference	$V_{REF}2.5$			2.5			*		V
5V Reference	$V_{REF}5$			5			*		V
Accuracy		V_{REF} = 2.5V or 5V		±0.05	±0.25		*	±0.5	%
vs Temperature		T_A = –40°C to +85°C		±20	±35		*	±75	ppm/°C
vs Supply Voltage, V+		V+ = 7.5V to 36V		±5	±20		*	*	ppm/V
vs Load		I_{REF} = 0mA to 2.5mA		60			*		ppm/mA
Noise: 0.1Hz to 10Hz				10			*		µVp-p
V_{REG}[5]	V_{REG}			5.1			*		V
Accuracy				±0.02	±0.1		*	*	V
vs Temperature		T_A = –40°C to +85°C		±0.3			*		mV/°C
vs Supply Voltage, V+		V+ = 7.5V to 36V		1			*		mV/V
Output Current	I_{REG}			See Typical Curves			*		mA
Output Impedance		I_{REG} = 0mA to 2.5mA		80			*		Ω
LINEARIZATION[6]									
R_{LIN} (external) Equation	R_{LIN}			$R_{LIN} = K_{LIN} \bullet \frac{4B}{1 - 2B}$, K_{LIN} in Ω, B is nonlinearity relative to V_{FS}					Ω
K_{LIN} Linearization Factor	K_{LIN}	V_{REF} = 5V		6.645			*		kΩ
		V_{REF} = 2.5V		9.905			*		kΩ
Accuracy				±1	±5		*	*	%
vs Temperature		T_A = –40°C to +85°C		±50	±100		*	*	ppm/°C
Max Correctable Sensor Nonlinearity	B	V_{REF} = 5V		±5			*		% of V_{FS}
		V_{REF} = 2.5V		–2.5, +5			*		% of V_{FS}
POWER SUPPLY	V+								
Specified				+24			*		V
Voltage Range			+7.5		+36	*		*	V
TEMPERATURE RANGE									
Specification			–40		+85	*		*	°C
Operating			–55		+125	*		*	°C
Storage			–55		+125	*		*	°C
Thermal Resistance	θ_{JA}								
14-Pin DIP				80			*		°C/W
SO-14 Surface Mount				100			*		°C/W

* Specification same as XTR106P, XTR106U.

NOTES: (1) Describes accuracy of the 4mA low-scale offset current. Does not include input amplifier effects. Can be trimmed to zero. (2) Does not include initial error or TCR of gain-setting resistor, R_G. (3) Increasing the full-scale input range improves nonlinearity. (4) Does not include Zero Output initial error. (5) Voltage measured with respect to I_{RET} pin. (6) See "Linearization" text for detailed explanation. V_{FS} = full-scale V_{IN}.

PIN CONFIGURATION

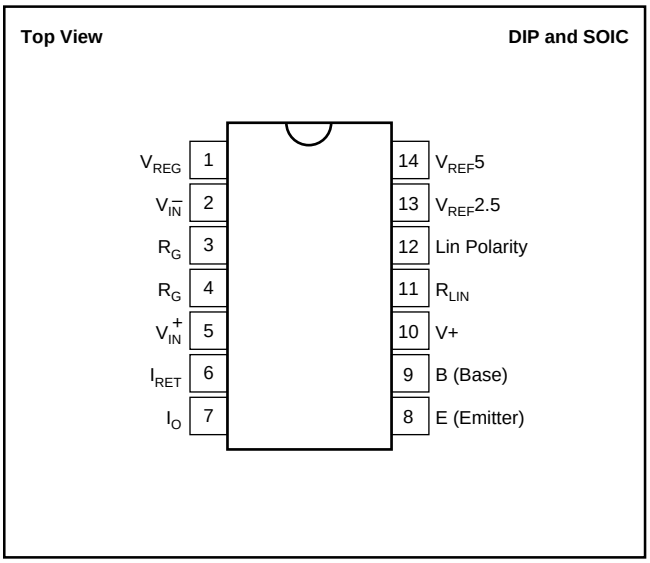

PACKAGE/ORDERING INFORMATION

For the most current package and ordering information, see the Package Option Addendum at the end of this data sheet.

ABSOLUTE MAXIMUM RATINGS(1)

Power Supply, V+ (referenced to I_O pin)	40V
Input Voltage, V_{IN}^+, V_{IN}^- (referenced to I_{RET} pin)	0V to V+
Storage Temperature Range	–55°C to +125°C
Lead Temperature (soldering, 10s)	+300°C
Output Current Limit	Continuous
Junction Temperature	+165°C

NOTE: (1) Stresses above these ratings may cause permanent damage. Exposure to absolute maximum conditions for extended periods may degrade device reliability.

ELECTROSTATIC DISCHARGE SENSITIVITY

This integrated circuit can be damaged by ESD. Texas Instruments recommends that all integrated circuits be handled with appropriate precautions. Failure to observe proper handling and installation procedures can cause damage.

ESD damage can range from subtle performance degradation to complete device failure. Precision integrated circuits may be more susceptible to damage because very small parametric changes could cause the device not to meet its published specifications.

FUNCTIONAL DIAGRAM

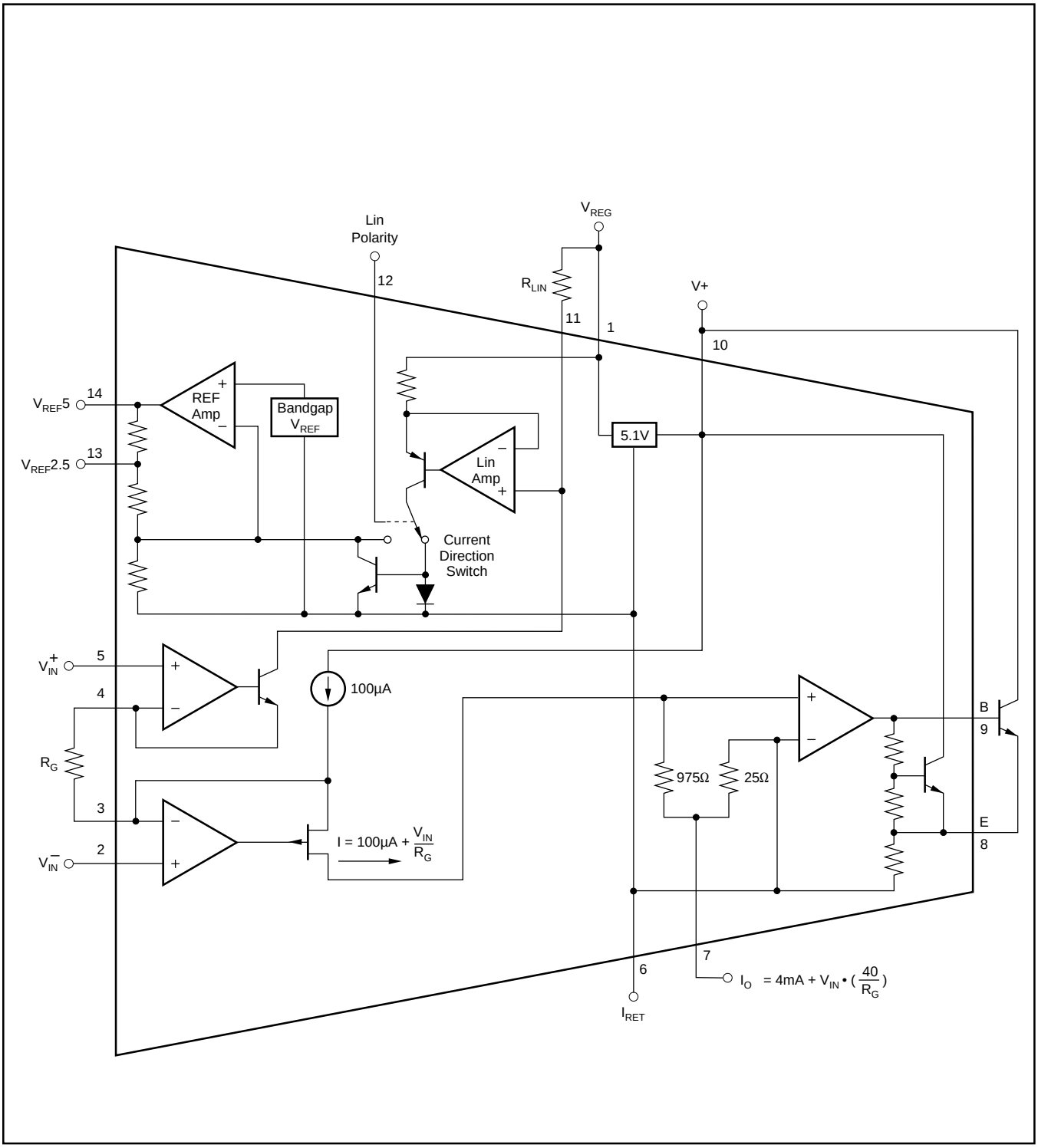

TYPICAL PERFORMANCE CURVES

At T_A = +25°C, V+ = 24V, unless otherwise noted.

TRANSCONDUCTANCE vs FREQUENCY

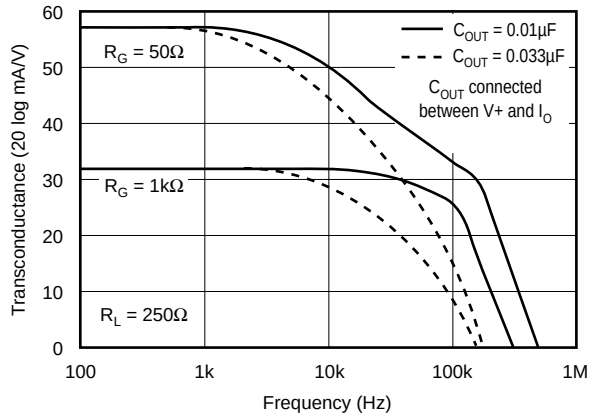

STEP RESPONSE

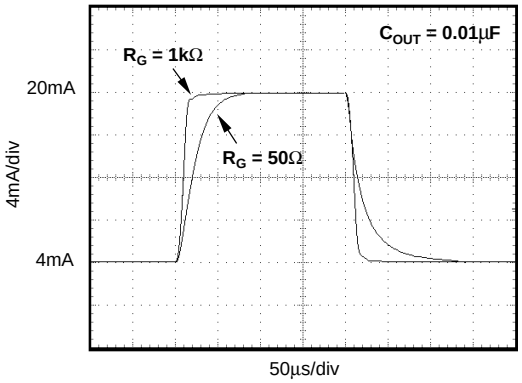

COMMON-MODE REJECTION vs FREQUENCY

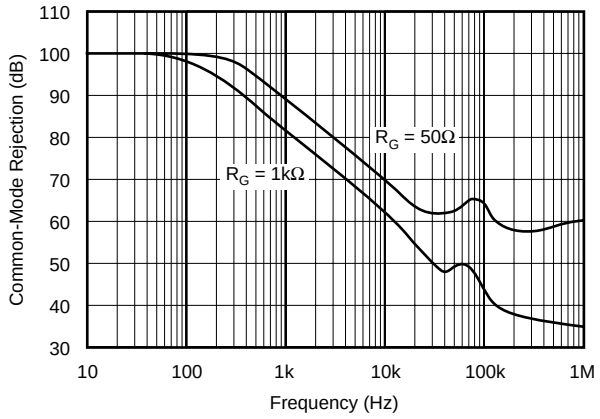

POWER SUPPLY REJECTION vs FREQUENCY

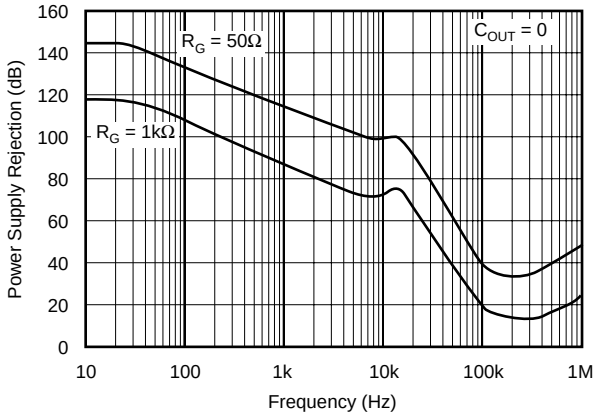

INPUT OFFSET VOLTAGE DRIFT PRODUCTION DISTRIBUTION

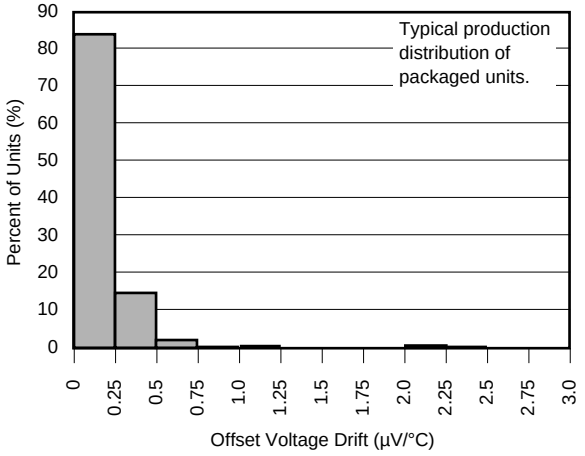

INPUT OFFSET VOLTAGE CHANGE vs V_{REG} and V_{REF} CURRENTS

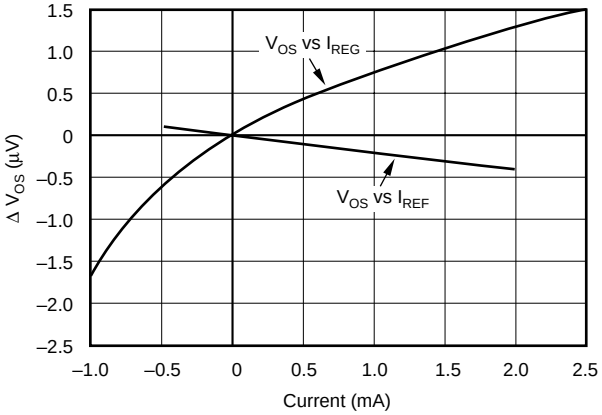

TYPICAL PERFORMANCE CURVES (CONT)

At T_A = +25°C, V+ = 24V, unless otherwise noted.

UNDER-SCALE CURRENT vs TEMPERATURE

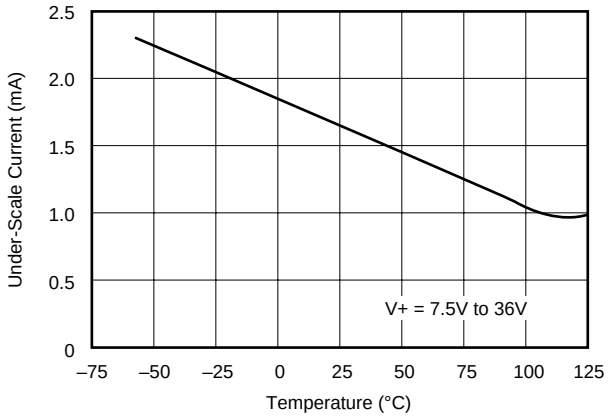

UNDER-SCALE CURRENT vs I_{REF} + I_{REG}

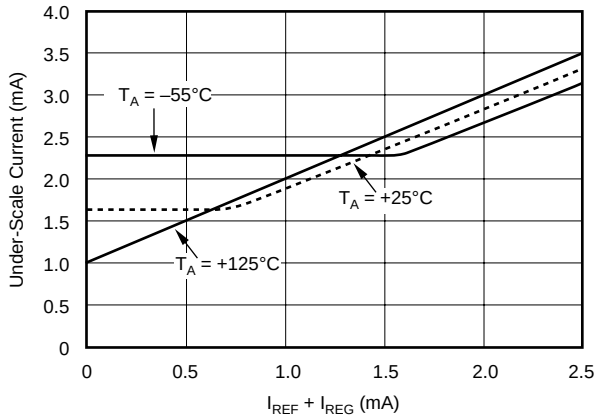

OVER-SCALE CURRENT vs TEMPERATURE

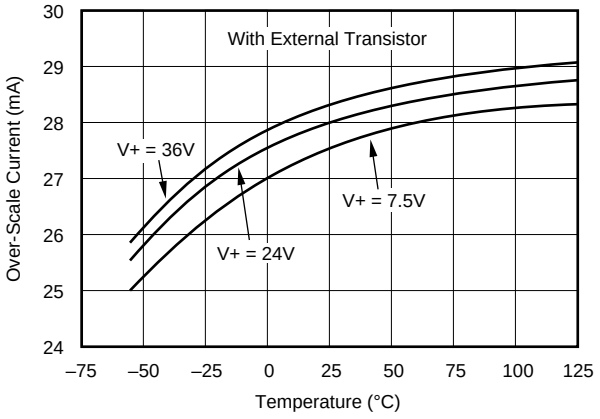

ZERO OUTPUT ERROR
vs V_{REF} and V_{REG} CURRENTS

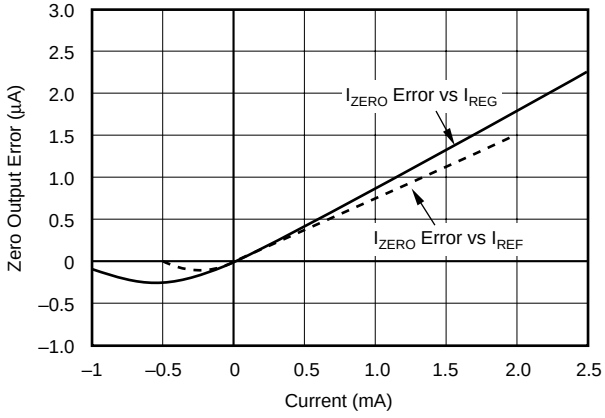

ZERO OUTPUT CURRENT ERROR
vs TEMPERATURE

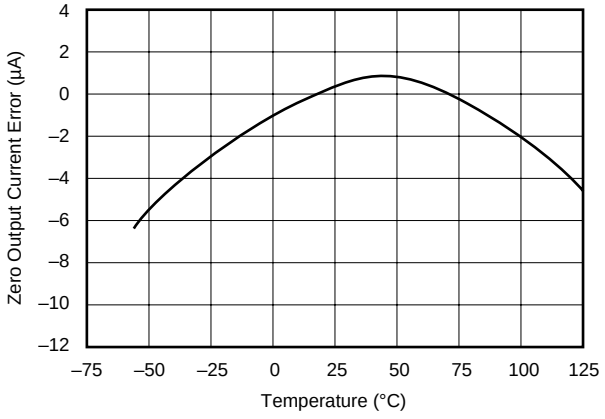

ZERO OUTPUT DRIFT
PRODUCTION DISTRIBUTION

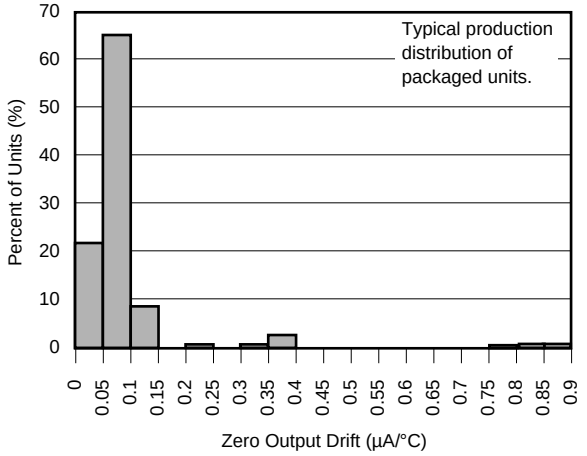

TYPICAL PERFORMANCE CURVES (CONT)

At T_A = +25°C, V+ = 24V, unless otherwise noted.

INPUT VOLTAGE, INPUT CURRENT, and ZERO OUTPUT CURRENT NOISE DENSITY vs FREQUENCY

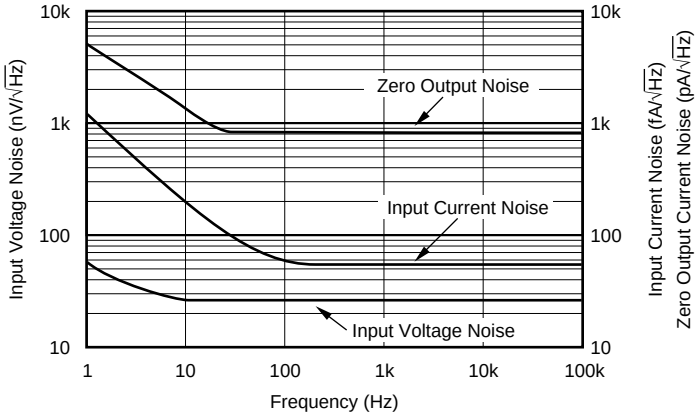

INPUT BIAS and OFFSET CURRENT vs TEMPERATURE

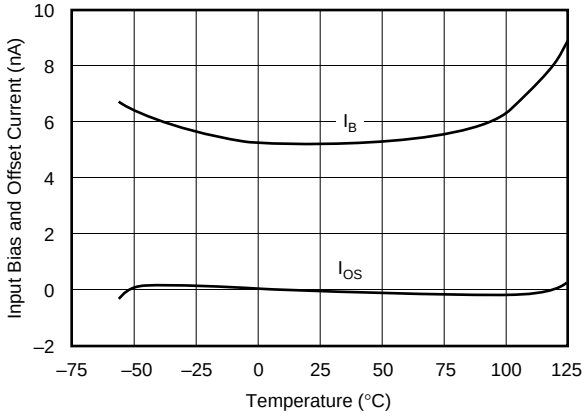

V_{REG} OUTPUT VOLTAGE vs V_{REG} OUTPUT CURRENT

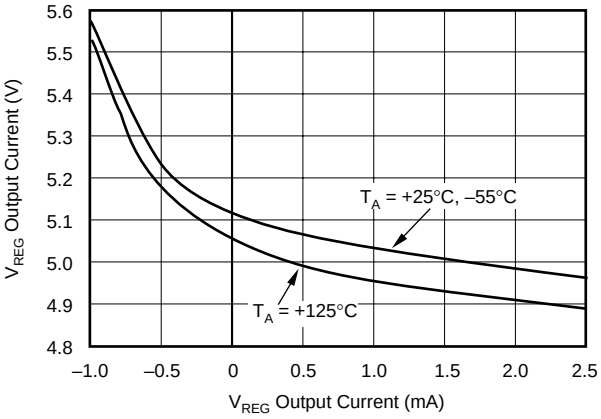

REFERENCE TRANSIENT RESPONSE

V_{REF} = 5V

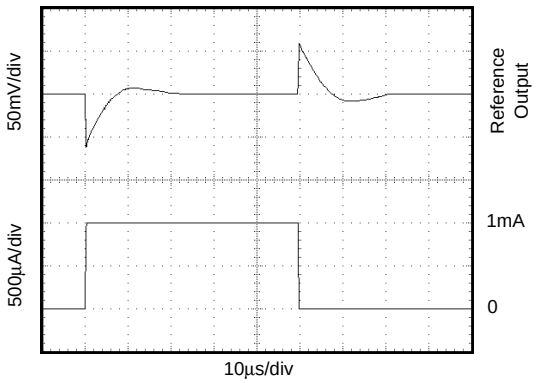

$V_{REF}5$ vs V_{REG} OUTPUT CURRENT

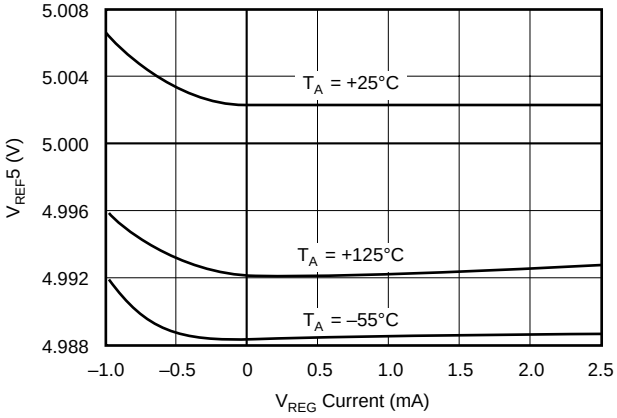

REFERENCE AC LINE REJECTION vs FREQUENCY

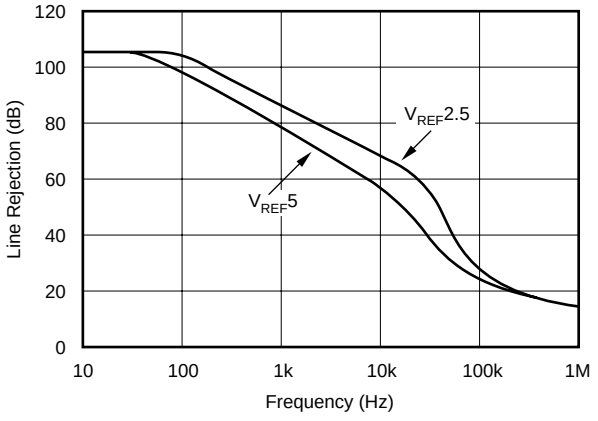

TYPICAL PERFORMANCE CURVES (CONT)

At T_A = +25°C, V+ = 24V, unless otherwise noted.

REFERENCE VOLTAGE DRIFT
PRODUCTION DISTRIBUTION

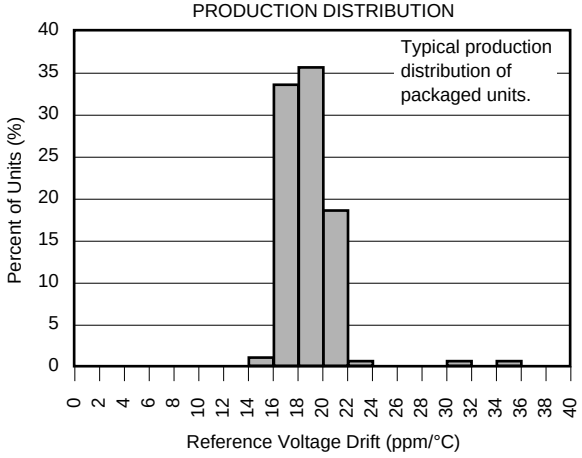

REFERENCE VOLTAGE DEVIATION
vs TEMPERATURE

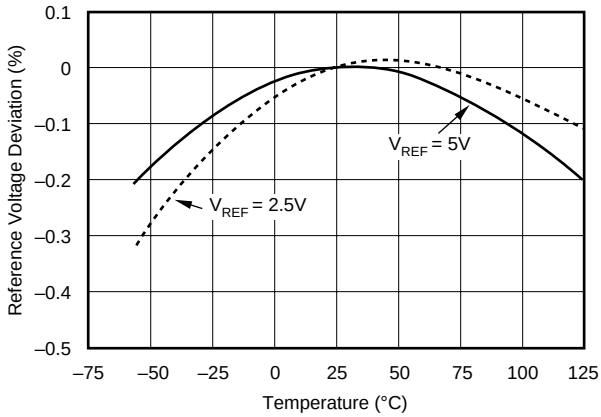

APPLICATIONS INFORMATION

Figure 1 shows the basic connection diagram for the XTR106. The loop power supply, V_{PS}, provides power for all circuitry. Output loop current is measured as a voltage across the series load resistor, R_L. A 0.01µF to 0.03µF supply bypass capacitor connected between V+ and I_O is recommended. For applications where fault and/or overload conditions might saturate the inputs, a 0.03µF capacitor is recommended.

A 2.5V or 5V reference is available to excite a bridge sensor. For 5V excitation, pin 14 ($V_{REF}5$) should be connected to the bridge as shown in Figure 1. For 2.5V excitation, connect pin 13 ($V_{REF}2.5$) to pin 14 as shown in Figure 3b. The output terminals of the bridge are connected to the instrumentation amplifier inputs, V_{IN}^+ and V_{IN}^-. A 0.01µF capacitor is shown connected between the inputs and is recommended for high impedance bridges (> 10kΩ). The resistor R_G sets the gain of the instrumentation amplifier as required by the full-scale bridge voltage, V_{FS}.

Lin Polarity and R_{LIN} provide second-order linearization correction to the bridge, achieving up to a 20:1 improvement in linearity. Connections to Lin Polarity (pin 12) determine the polarity of nonlinearity correction and should be connected either to I_{RET} or V_{REG}. Lin Polarity should be connected to V_{REG} even if linearity correction is not desired. R_{LIN} is chosen according to the equation in Figure 1 and is dependent on K_{LIN} (linearization constant) and the bridge's nonlinearity relative to V_{FS} (see "Linearization" section).

The transfer function for the complete current transmitter is:

$$I_O = 4mA + V_{IN} \bullet (40/R_G) \quad (1)$$

V_{IN} in Volts, R_G in Ohms

where V_{IN} is the differential input voltage. As evident from the transfer function, if no R_G is used ($R_G = \infty$), the gain is zero and the output is simply the XTR106's zero current.

A negative input voltage, V_{IN}, will cause the output current to be less than 4mA. Increasingly negative V_{IN} will cause the output current to limit at approximately 1.6mA. If current is being sourced from the reference and/or V_{REG}, the current limit value may increase. Refer to the Typical Performance Curves, "Under-Scale Current vs I_{REF} + I_{REG}" and "Under-Scale Current vs Temperature."

Increasingly positive input voltage (greater than the full-scale input, V_{FS}) will produce increasing output current according to the transfer function, up to the output current limit of approximately 28mA. Refer to the Typical Performance Curve, "Over-Scale Current vs Temperature."

The I_{RET} pin is the return path for all current from the references and V_{REG}. I_{RET} also serves as a local ground and is the reference point for V_{REG} and the on-board voltage references. The I_{RET} pin allows any current used in external circuitry to be sensed by the XTR106 and to be included in the output current without causing error. The input voltage range of the XTR106 is referred to this pin.

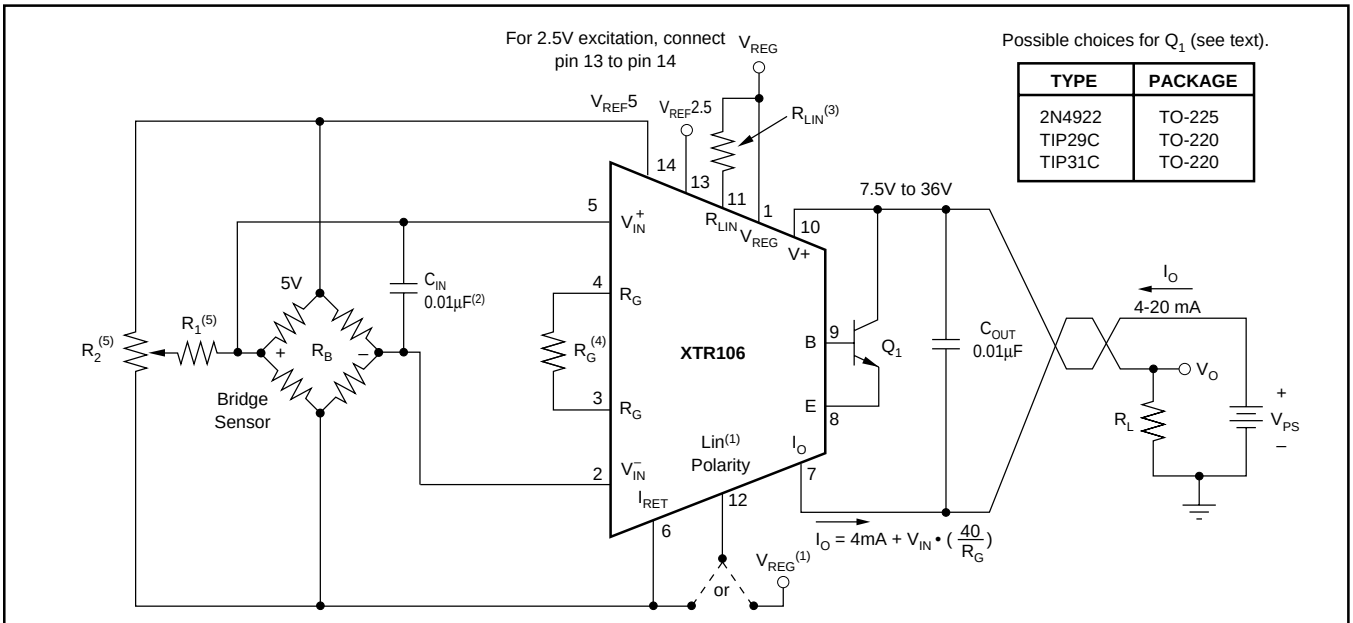

NOTES:
(1) Connect Lin Polarity (pin 12) to I_{RET} (pin 6) to correct for positive bridge nonlinearity or connect to V_{REG} (pin 1) for negative bridge nonlinearity. The R_{LIN} pin and Lin Polarity pin must be connected to V_{REG} if linearity correction is not desired. Refer to "Linearization" section and Figure 3.

(2) Recommended for bridge impedances > 10kΩ

(3) $R_{LIN} = \left| K_{LIN} \bullet \frac{4B}{1 - 2B} \right|$ (K_{LIN} in Ω)

(4) $R_G = (V_{FS}/400\mu A) \bullet \frac{1 + 2B}{1 - 2B}$ (V_{FS} in V)

where K_{LIN} = 9.905kΩ for 2.5V reference
K_{LIN} = 6.645kΩ for 5V reference
B is the bridge nonlinearity relative to V_{FS}
V_{FS} is the full-scale input voltage

(5) R_1 and R_2 form bridge trim circuit to compensate for the initial accuracy of the bridge. See "Bridge Balance" text.

FIGURE 1. Basic Bridge Measurement Circuit with Linearization.

EXTERNAL TRANSISTOR

External pass transistor, Q_1, conducts the majority of the signal-dependent 4-20mA loop current. Using an external transistor isolates the majority of the power dissipation from the precision input and reference circuitry of the XTR106, maintaining excellent accuracy.

Since the external transistor is inside a feedback loop its characteristics are not critical. Requirements are: V_{CEO} = 45V min, β = 40 min and P_D = 800mW. Power dissipation requirements may be lower if the loop power supply voltage is less than 36V. Some possible choices for Q_1 are listed in Figure 1.

The XTR106 can be operated without an external pass transistor. Accuracy, however, will be somewhat degraded due to the internal power dissipation. Operation without Q_1 is not recommended for extended temperature ranges. A resistor (R = 3.3kΩ) connected between the I_{RET} pin and the E (emitter) pin may be needed for operation below 0°C without Q_1 to guarantee the full 20mA full-scale output, especially with V+ near 7.5V.

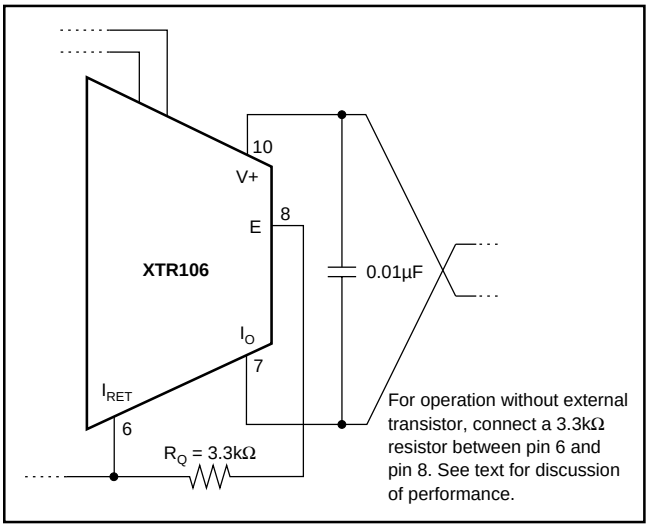

FIGURE 2. Operation without External Transistor.

LOOP POWER SUPPLY

The voltage applied to the XTR106, V+, is measured with respect to the I_O connection, pin 7. V+ can range from 7.5V to 36V. The loop supply voltage, V_{PS}, will differ from the voltage applied to the XTR106 according to the voltage drop on the current sensing resistor, R_L (plus any other voltage drop in the line).

If a low loop supply voltage is used, R_L (including the loop wiring resistance) must be made a relatively low value to assure that V+ remains 7.5V or greater for the maximum loop current of 20mA:

$$R_L \text{ max} = \left(\frac{(V+) - 7.5V}{20mA} \right) - R_{WIRING} \quad (2)$$

It is recommended to design for V+ equal or greater than 7.5V with loop currents up to 30mA to allow for out-of-range input conditions. V+ must be at least 8V if 5V sensor excitation is used and if correcting for bridge nonlinearity greater than +3%.

The low operating voltage (7.5V) of the XTR106 allows operation directly from personal computer power supplies (12V ±5%). When used with the RCV420 Current Loop Receiver (Figure 8), load resistor voltage drop is limited to 3V.

BRIDGE BALANCE

Figure 1 shows a bridge trim circuit (R_1, R_2). This adjustment can be used to compensate for the initial accuracy of the bridge and/or to trim the offset voltage of the XTR106. The values of R_1 and R_2 depend on the impedance of the bridge, and the trim range required. This trim circuit places an additional load on the V_{REF} output. Be sure the additional load on V_{REF} does not affect zero output. See the Typical Performance Curve, "Under-Scale Current vs I_{REF} + I_{REG}." The effective load of the trim circuit is nearly equal to R_2. An approximate value for R_1 can be calculated:

$$R_1 \approx \frac{5V \bullet R_B}{4 \bullet V_{TRIM}} \quad (3)$$

where, R_B is the resistance of the bridge.

V_{TRIM} is the desired ±voltage trim range (in V).

Make R_2 equal or lower in value to R_1.

LINEARIZATION

Many bridge sensors are inherently nonlinear. With the addition of one external resistor, it is possible to compensate for parabolic nonlinearity resulting in up to 20:1 improvement over an uncompensated bridge output.

Linearity correction is accomplished by varying the bridge excitation voltage. Signal-dependent variation of the bridge excitation voltage adds a second-order term to the overall transfer function (including the bridge). This can be tailored to correct for bridge sensor nonlinearity.

Either positive or negative bridge non-linearity errors can be compensated by proper connection of the Lin Polarity pin. To correct for positive bridge nonlinearity (upward bowing), Lin Polarity (pin 12) should be connected to I_{RET} (pin 6) as shown in Figure 3a. This causes V_{REF} to increase with bridge output which compensates for a positive bow in the bridge response. To correct negative nonlinearity (downward bowing), connect Lin Polarity to V_{REG} (pin 1) as shown in Figure 3b. This causes V_{REF} to decrease with bridge output. The Lin Polarity pin is a high impedance node.

If no linearity correction is desired, both the R_{LIN} and Lin Polarity pins should be connected to V_{REG} (Figure 3c). This results in a constant reference voltage independent of input signal. **R_{LIN} or Lin Polarity pins should not be left open or connected to another potential.**

R_{LIN} is the external linearization resistor and is connected between pin 11 and pin 1 (V_{REG}) as shown in Figures 3a and 3b. To determine the value of R_{LIN}, the nonlinearity of the bridge sensor with constant excitation voltage must be known. The XTR106's linearity circuitry can only compensate for the parabolic-shaped portions of a sensor's nonlinearity. Optimum correction occurs when maximum deviation from linear output occurs at mid-scale (see Figure 4). Sensors with nonlinearity curves similar to that shown in

Figure 4, but not peaking exactly at mid-scale can be substantially improved. A sensor with a "S-shaped" nonlinearity curve (equal positive and negative nonlinearity) cannot be improved with the XTR106's correction circuitry.

The value of R_{LIN} is chosen according to Equation 4 shown in Figure 3. R_{LIN} is dependent on a linearization factor, K_{LIN}, which differs for the 2.5V reference and 5V reference. The sensor's nonlinearity term, B (relative to full scale), is positive or negative depending on the direction of the bow.

A maximum ±5% non-linearity can be corrected when the 5V reference is used. Sensor nonlinearity of +5%/–2.5% can be corrected with 2.5V excitation. The trim circuit shown in Figure 3d can be used for bridges with unknown bridge nonlinearity polarity.

Gain is affected by the varying excitation voltage used to correct bridge nonlinearity. The corrected value of the gain resistor is calculated from Equation 5 given in Figure 3.

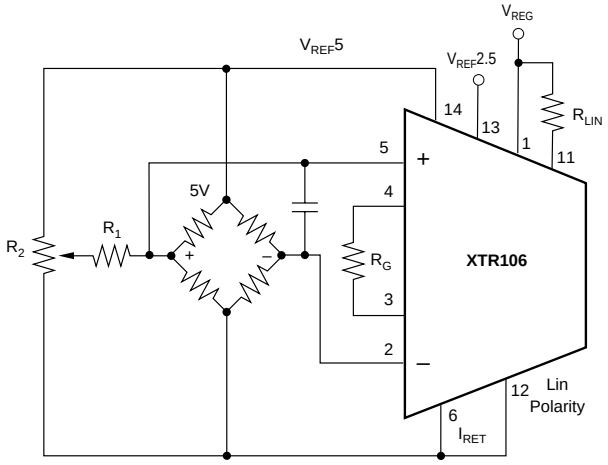

3a. Connection for Positive Bridge Nonlinearity, V_{REF} = 5V

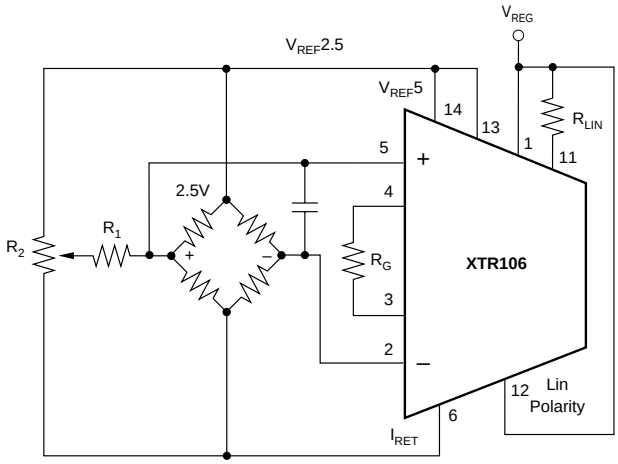

3b. Connection for Negative Bridge Nonlinearity, V_{REF} = 2.5V

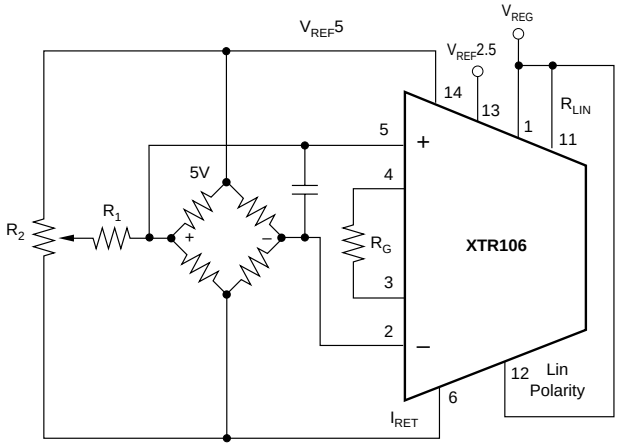

3c. Connection if no linearity correction is desired, V_{REF} = 5V

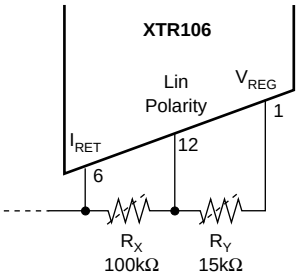

Open R_X for negative bridge nonlinearity
Open R_Y for positive bridge nonlinearity

3d. On-Board Resistor Circuit for Unknown Bridge Nonlinearity Polarity

EQUATIONS

Linearization Resistor:

$$R_{LIN} = \left| K_{LIN} \bullet \frac{4B}{1-2B} \right| \quad (\text{in } \Omega) \tag{4}$$

Gain-Set Resistor:

$$R_G = \frac{V_{FS}}{400\mu A} \bullet \frac{1+2B}{1-2B} \quad (\text{in } \Omega) \tag{5}$$

Adjusted Excitation Voltage at Full-Scale Output:

$$V_{REF\,(Adj)} = V_{REF\,(Initial)} \bullet \frac{1+2B}{1-2B} \quad (\text{in V}) \tag{6}$$

where, K_{LIN} is the linearization factor (in Ω)

K_{LIN} = 9905Ω for the 2.5V reference

K_{LIN} = 6645Ω for the 5V reference

B is the sensor nonlinearity relative to V_{FS} (for –2.5% nonlinearity, B = –0.025)

V_{FS} is the full-scale bridge output without linearization (in V)

Example:

Calculate R_{LIN} and the resulting R_G for a bridge sensor with 2.5% downward bow nonlinearity relative to V_{FS} and determine if the input common-mode range is valid.

V_{REF} = 2.5V and V_{FS} = 50mV

For a 2.5% downward bow, B = –0.025 (Lin Polarity pin connected to V_{REG})

For V_{REF} = 2.5V, K_{LIN} = 9905Ω

$$R_{LIN} = \left| \frac{(9905\Omega)(4)(-0.025)}{1-(2)(-0.025)} \right| = 943\Omega$$

$$R_G = \frac{0.05V}{400\mu A} \bullet \frac{1+(2)(-0.025)}{1-(2)(-0.025)} = 113\Omega$$

$$V_{CM} = \frac{V_{REF\,(Adj)}}{2} = \frac{1}{2} \bullet 2.5V \bullet \frac{1+(2)(-0.025)}{1-(2)(-0.025)} = 1.13V$$

which falls within the 1.1V to 3.5V input common-mode range.

FIGURE 3. Connections and Equations to Correct Positive and Negative Bridge Nonlinearity.

When using linearity correction, care should be taken to insure that the sensor's output common-mode voltage remains within the XTR106's allowable input range of 1.1V to 3.5V. Equation 6 in Figure 3 can be used to calculate the XTR106's new excitation voltage. The common-mode voltage of the bridge output is simply half this value if no common-mode resistor is used (refer to the example in Figure 3). Exceeding the common-mode range may yield unpredicatable results.

For high precision applications (errors < 1%), a two-step calibration process can be employed. First, the nonlinearity of the sensor bridge is measured with the initial gain resistor and $R_{LIN} = 0$ (R_{LIN} pin connected directly to V_{REG}). Using the resulting sensor nonlinearity, B, values for R_G and R_{LIN} are calculated using Equations 4 and 5 from Figure 3. A second calibration measurement is then taken to adjust R_G to account for the offsets and mismatches in the linearization.

UNDER-SCALE CURRENT

The total current being drawn from the V_{REF} and V_{REG} voltage sources, as well as temperature, affect the XTR106's under-scale current value (see the Typical Performance Curve, "Under-Scale Current vs $I_{REF} + I_{REG}$). This should be considered when choosing the bridge resistance and excitation voltage, especially for transducers operating over a wide temperature range (see the Typical Performance Curve, "Under-Scale Current vs Temperature").

LOW IMPEDANCE BRIDGES

The XTR106's two available excitation voltages (2.5V and 5V) allow the use of a wide variety of bridge values. Bridge impedances as low as 1kΩ can be used without any additional circuitry. Lower impedance bridges can be used with the XTR106 by adding a series resistance to limit excitation current to ≤ 2.5mA (Figure 5). Resistance should be added

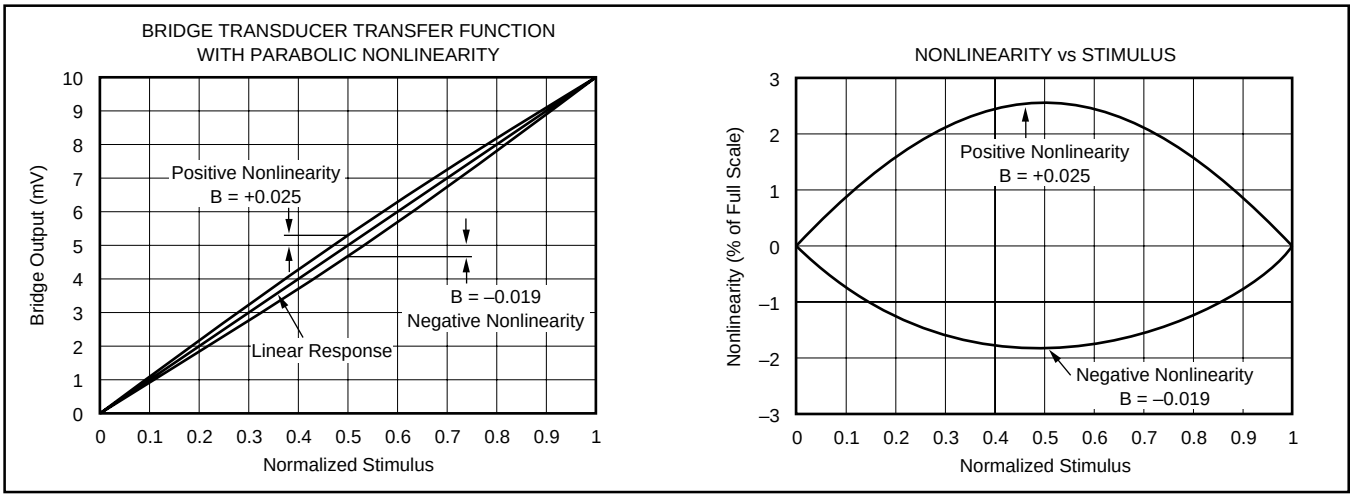

FIGURE 4. Parabolic Nonlinearity.

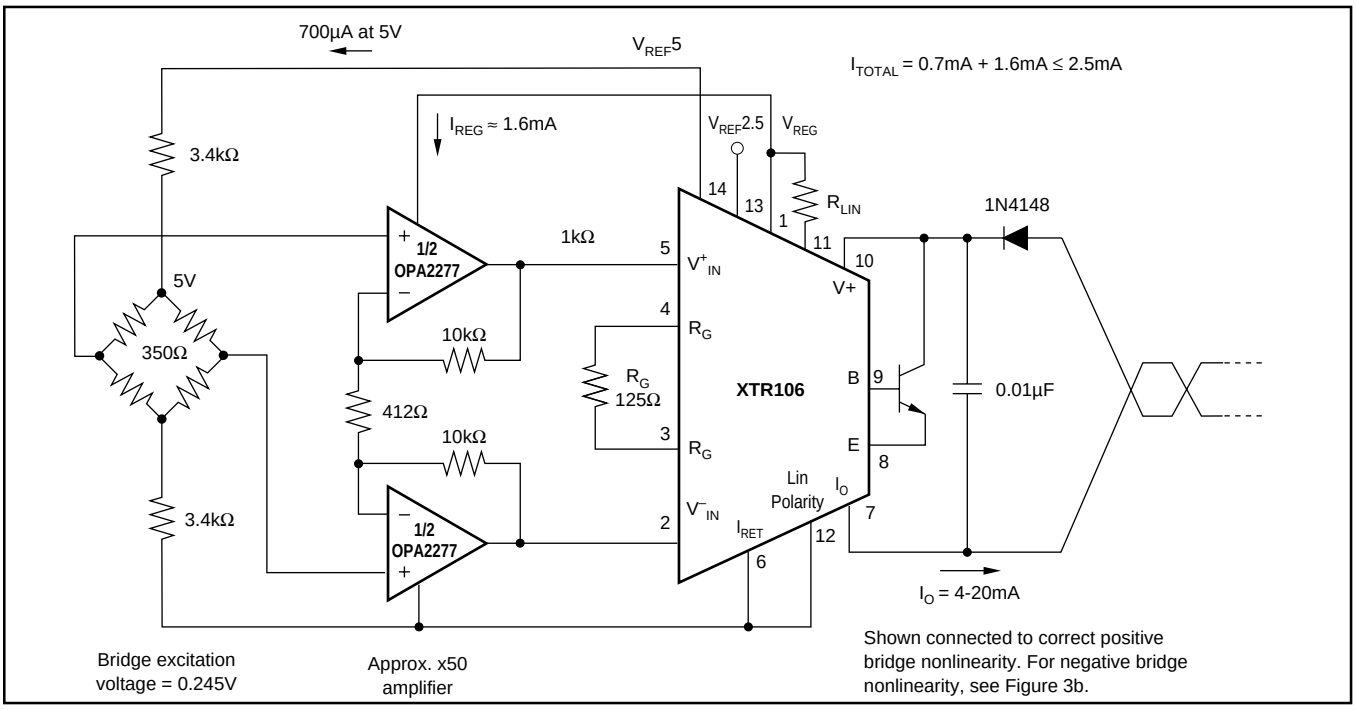

FIGURE 5. 350Ω Bridge with x50 Preamplifier.

to the upper and lower sides of the bridge to keep the bridge output within the 1.1V to 3.5V common-mode input range. Bridge output is reduced so a preamplifier as shown may be needed to reduce offset voltage and drift.

OTHER SENSOR TYPES

The XTR106 can be used with a wide variety of inputs. Its high input impedance instrumentation amplifier is versatile and can be configured for differential input voltages from millivolts to a maximum of 2.4V full scale. The linear range of the inputs is from 1.1V to 3.5V, referenced to the I_{RET} terminal, pin 6. The linearization feature of the XTR106 can be used with any sensor whose output is ratiometric with an excitation voltage.

ERROR ANALYSIS

Table I shows how to calculate the effect various error sources have on circuit accuracy. A sample error calculation for a typical bridge sensor measurement circuit is shown (5kΩ bridge, V_{REF} = 5V, V_{FS} = 50mV) is provided. The results reveal the XTR106's excellent accuracy, in this case 1.2% unadjusted. Adjusting gain and offset errors improves circuit accuracy to 0.33%. Note that these are worst-case errors; guaranteed maximum values were used in the calculations and all errors were assumed to be positive (additive). The XTR106 achieves performance which is difficult to obtain with discrete circuitry and requires less board space.

SAMPLE ERROR CALCULATION

Bridge Impedance (R_B)	5kΩ	Full Scale Input (V_{FS})	50mV
Ambient Temperature Range (ΔT_A)	20°C	Excitation Voltage (V_{REF})	5V
Supply Voltage Change (ΔV+)	5V	Common-Mode Voltage Change (ΔCM)	25mV (= V_{FS}/2)

ERROR SOURCE	SAMPLE ERROR EQUATION	ERROR CALCULATION	ERROR (ppm of Full Scale) UNADJ	ADJUST
INPUT				
Input Offset Voltage	$V_{OS}/V_{FS} \cdot 10^6$	200µV/50mV • 10^6	2000	0
vs Common-Mode	CMRR • ΔCM/V_{FS} • 10^6	50µV/V • 0.025V/50mV • 10^6	25	25
vs Power Supply	(V_{OS} vs V+) • (ΔV+)/V_{FS} • 10^6	3µV/V • 5V/50mV • 10^6	300	300
Input Bias Current	CMRR • I_B • (R_B/2)/V_{FS} • 10^6	50µV/V • 25nA • 2.5kΩ/50mV • 10^6	0.1	0
Input Offset Current	I_{OS} • R_B/V_{FS} • 10^6	3nA • 5kΩ/50mV • 10^6	300	0
		Total Input Error	**2625**	**325**
EXCITATION				
Voltage Reference Accuracy	V_{REF} Accuracy (%)/100% • 10^6	0.25%/100% • 10^6	2500	0
vs Supply	(V_{REF} vs V+) • (ΔV+) • (V_{FS}/V_{REF})	20ppm/V • 5V (50mV/5V)	1	1
		Total Excitation Error	**2501**	**1**
GAIN				
Span	Span Error (%)/100% • 10^6	0.2%/100% • 10^6	2000	0
Nonlinearity	Nonlinearity (%)/100% • 10^6	0.01%/100% • 10^6	100	100
		Total Gain Error	**2100**	**100**
OUTPUT				
Zero Output	| I_{ZERO} – 4mA |/16000µA • 10^6	25µA/16000µA • 10^6	1563	0
vs Supply	(I_{ZERO} vs V+) • (ΔV+)/16000µA • 10^6	0.2µA/V • 5V/16000µA • 10_6	62.5	62.5
		Total Output Error	**1626**	**63**
DRIFT (ΔT_A = 20°C)				
Input Offset Voltage	Drift • ΔT_A/(V_{FS}) • 10^6	1.5µV/°C • 20°C/(50mV) • 10^6	600	600
Input Offset Current (typical)	Drift • ΔT_A• R_B/(V_{FS}) • 10^6	5pA/°C • 20°C • 5kΩ/(50mV) • 10^6	10	10
Voltage Refrence Accuracy		35ppm/°C • 20°C	700	700
Span		225ppm/°C • 20°C	500	500
Zero Output	Drift • ΔT_A/16000µA • 10^6	0.9µA/°C • 20°C/16000µA • 10^6	1125	1125
		Total Drift Error	**2936**	**2936**
NOISE (0.1Hz to 10Hz, typ)				
Input Offset Voltage	V_n(p-p)/V_{FS} • 10^6	0.6µV/50mV • 10^6	12	12
Zero Output	I_{ZERO} Noise/16000µA • 10^6	0.035µA/16000µA • 10^6	2.2	2.2
Thermal R_B Noise	$[\sqrt{2} \cdot \sqrt{(R_B/2)/1k\Omega} \cdot 4nV/\sqrt{Hz} \cdot \sqrt{10Hz}]/V_{FS} \cdot 10^6$	$[\sqrt{2} \cdot \sqrt{2.5k\Omega/1k\Omega} \cdot 4nV/\sqrt{Hz} \cdot \sqrt{10Hz}]/50mV \cdot 10^6$	0.6	0.6
Input Current Noise	(i_n • 40.8 • $\sqrt{2}$ • R_B/2)/V_{FS} • 10^6	(200fA/$\sqrt{Hz}$ • 40.8 • $\sqrt{2}$ • 2.5kΩ)/50mV• 10^6	0.6	0.6
		Total Noise Error	**15**	**15**
NOTE (1): All errors are min/max and referred to input, unless otherwise stated.		**TOTAL ERROR:**	**11803**	**3340**
			1.18%	**0.33%**

TABLE I. Error Calculation.

REVERSE-VOLTAGE PROTECTION

The XTR106's low compliance rating (7.5V) permits the use of various voltage protection methods without compromising operating range. Figure 6 shows a diode bridge circuit which allows normal operation even when the voltage connection lines are reversed. The bridge causes a two diode drop (approximately 1.4V) loss in loop supply voltage. This results in a compliance voltage of approximately 9V—satisfactory for most applications. A diode can be inserted in series with the loop supply voltage and the V+ pin as shown in Figure 8 to protect against reverse output connection lines with only a 0.7V loss in loop supply voltage.

OVER-VOLTAGE SURGE PROTECTION

Remote connections to current transmitters can sometimes be subjected to voltage surges. It is prudent to limit the maximum surge voltage applied to the XTR106 to as low as practical. Various zener diode and surge clamping diodes are specially designed for this purpose. Select a clamp diode with as low a voltage rating as possible for best protection. For example, a 36V protection diode will assure proper transmitter operation at normal loop voltages, yet will provide an appropriate level of protection against voltage surges. Characterization tests on three production lots showed no damage to the XTR106 with loop supply voltages up to 65V.

Most surge protection zener diodes have a diode characteristic in the forward direction that will conduct excessive current, possibly damaging receiving-side circuitry if the loop connections are reversed. If a surge protection diode is used, a series diode or diode bridge should be used for protection against reversed connections.

RADIO FREQUENCY INTERFERENCE

The long wire lengths of current loops invite radio frequency interference. RF can be rectified by the sensitive input circuitry of the XTR106 causing errors. This generally appears as an unstable output current that varies with the position of loop supply or input wiring.

If the bridge sensor is remotely located, the interference may enter at the input terminals. For integrated transmitter assemblies with short connection to the sensor, the interference more likely comes from the current loop connections.

Bypass capacitors on the input reduce or eliminate this input interference. Connect these bypass capacitors to the I_{RET} terminal as shown in Figure 6. Although the dc voltage at the I_{RET} terminal is not equal to 0V (at the loop supply, V_{PS}) this circuit point can be considered the transmitter's "ground." The 0.01µF capacitor connected between V+ and I_O may help minimize output interference.

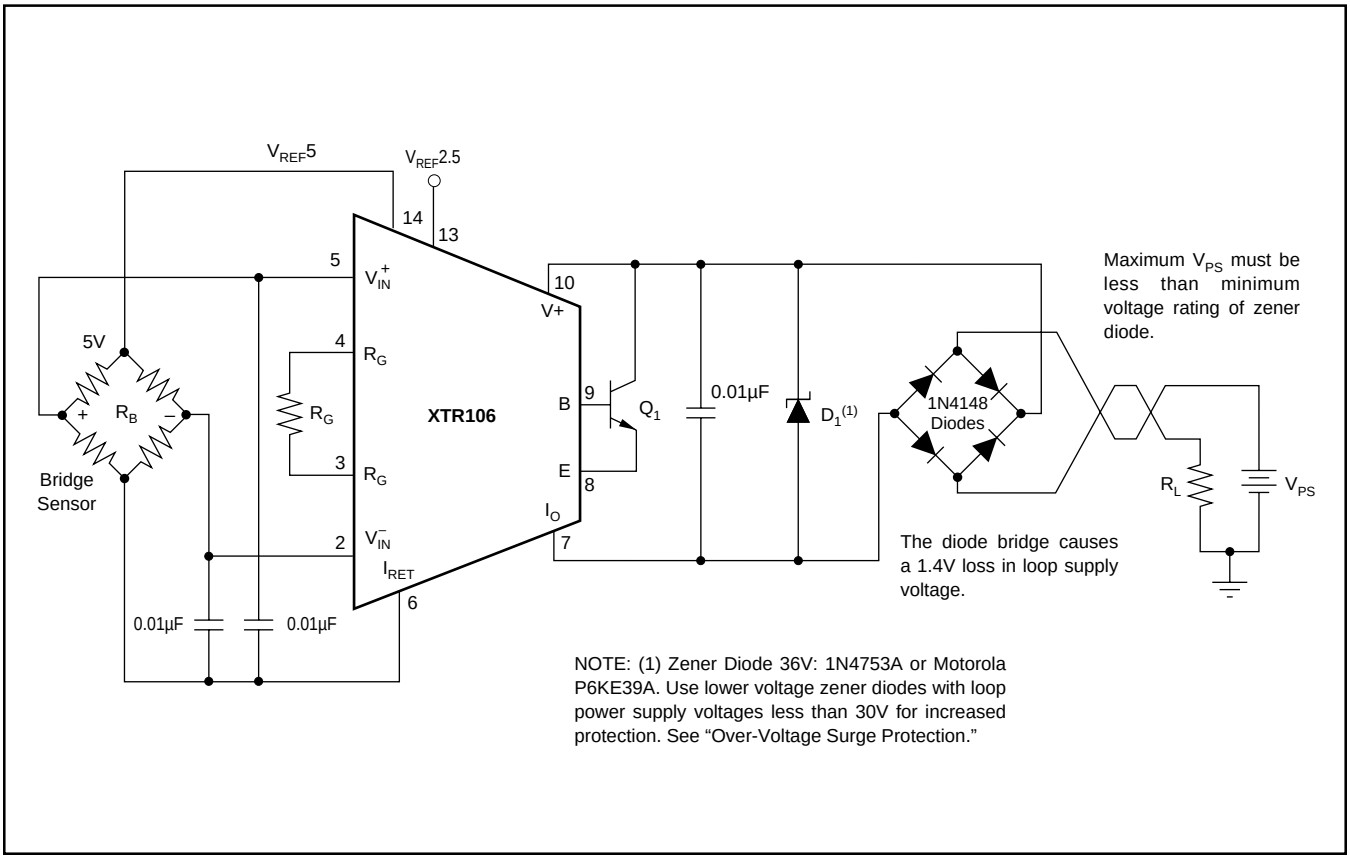

FIGURE 6. Reverse Voltage Operation and Over-Voltage Surge Protection.

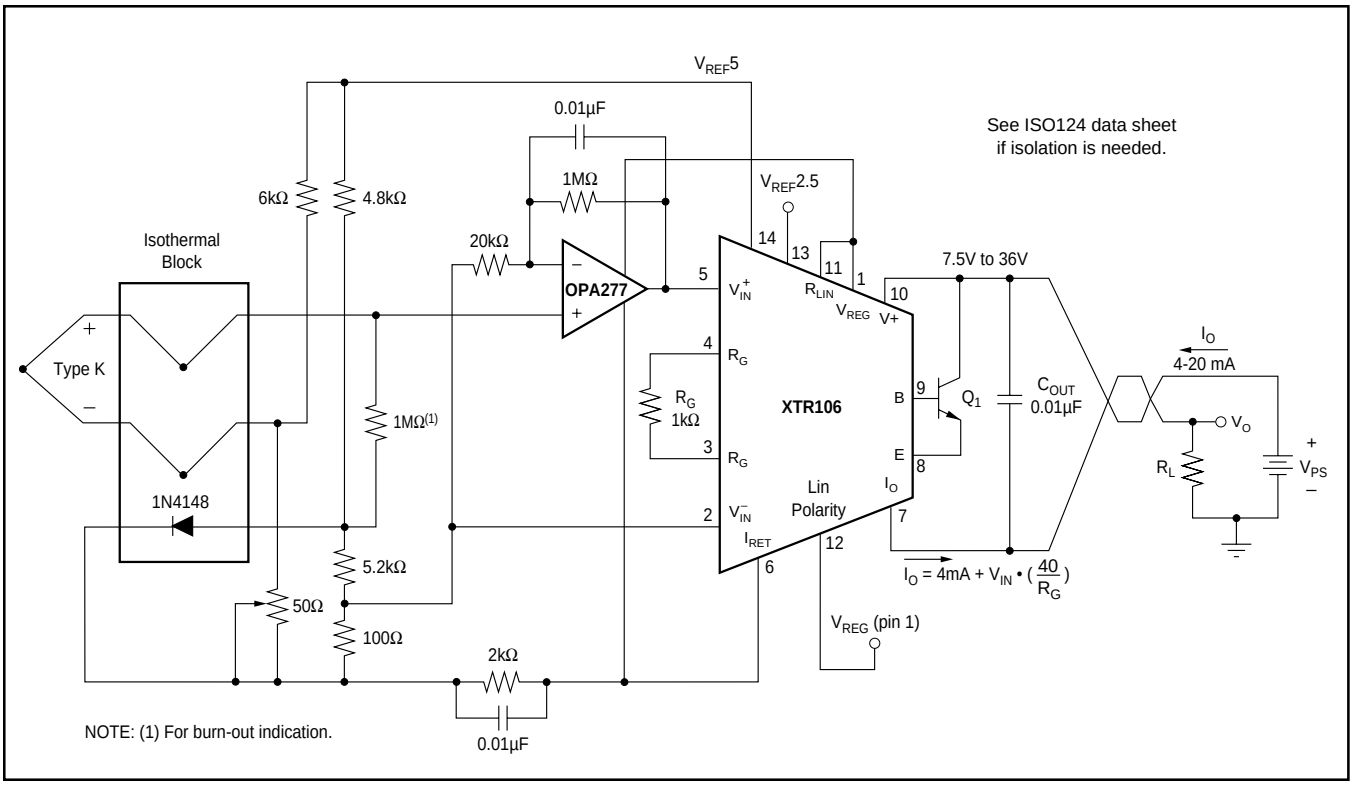

FIGURE 7. Thermocouple Low Offset, Low Drift Loop Measurement with Diode Cold-Junction Compensation.

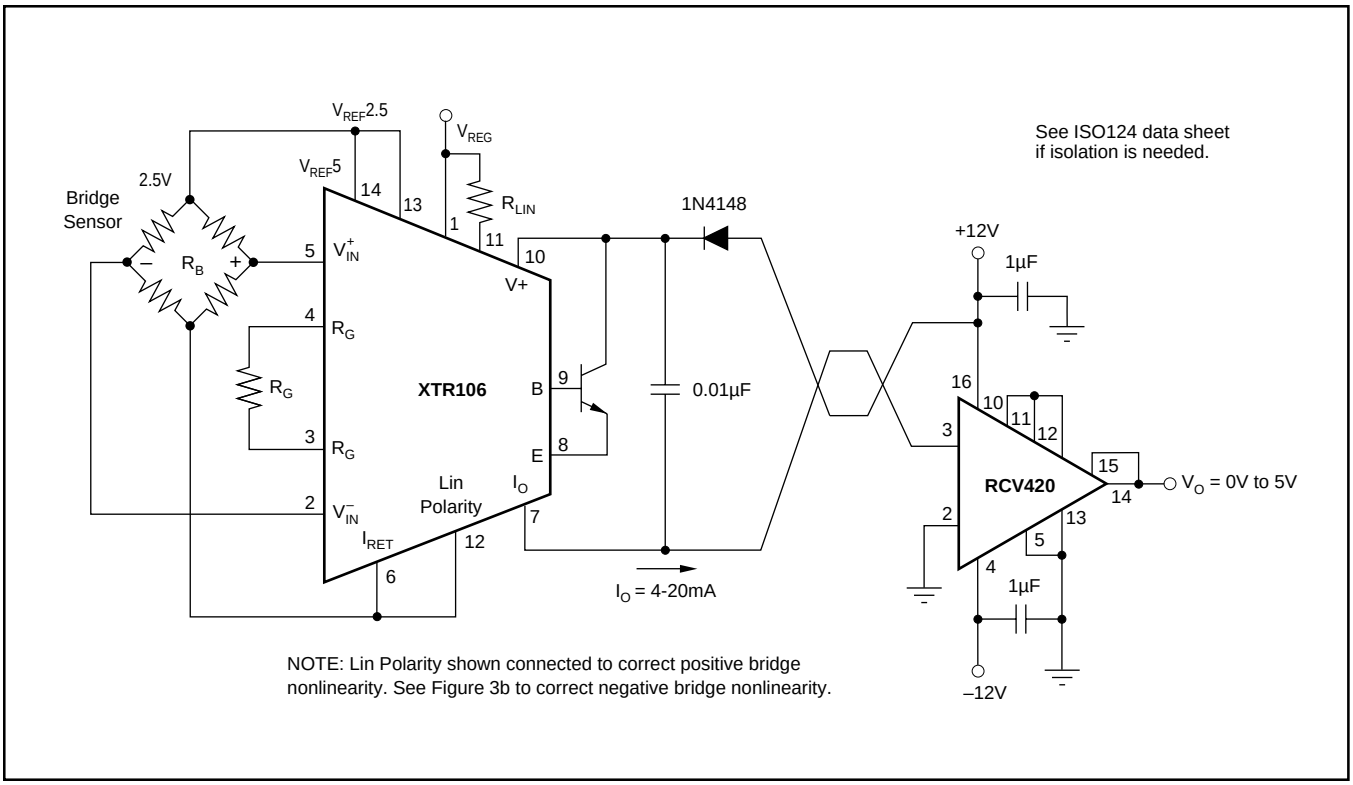

FIGURE 8. ±12V-Powered Transmitter/Receiver Loop.

PACKAGING INFORMATION

Orderable Device	Status (1)	Package Type	Package Drawing	Pins	Package Qty	Eco Plan (2)	Lead finish/ Ball material (6)	MSL Peak Temp (3)	Op Temp (°C)	Device Marking (4/5)	Samples
XTR106P	ACTIVE	PDIP	N	14	25	RoHS & Green	Call TI	N / A for Pkg Type	-40 to 85	XTR106P A	Samples
XTR106PA	ACTIVE	PDIP	N	14	25	RoHS & Green	Call TI	N / A for Pkg Type		XTR106P A	Samples
XTR106U	ACTIVE	SOIC	D	14	50	RoHS & Green	Call TI	Level-3-260C-168 HR	-40 to 85	XTR106U	Samples
XTR106U/2K5	ACTIVE	SOIC	D	14	2500	RoHS & Green	Call TI	Level-3-260C-168 HR	-40 to 85	XTR106U	Samples
XTR106UA	ACTIVE	SOIC	D	14	50	RoHS & Green	Call TI	Level-3-260C-168 HR	-40 to 85	XTR106U A	Samples
XTR106UA/2K5	ACTIVE	SOIC	D	14	2500	RoHS & Green	Call TI	Level-3-260C-168 HR	-40 to 85	XTR106U A	Samples
XTR106UAG4	ACTIVE	SOIC	D	14	50	RoHS & Green	Call TI	Level-3-260C-168 HR	-40 to 85	XTR106U A	Samples

(1) The marketing status values are defined as follows:
ACTIVE: Product device recommended for new designs.
LIFEBUY: TI has announced that the device will be discontinued, and a lifetime-buy period is in effect.
NRND: Not recommended for new designs. Device is in production to support existing customers, but TI does not recommend using this part in a new design.
PREVIEW: Device has been announced but is not in production. Samples may or may not be available.
OBSOLETE: TI has discontinued the production of the device.

(2) **RoHS:** TI defines "RoHS" to mean semiconductor products that are compliant with the current EU RoHS requirements for all 10 RoHS substances, including the requirement that RoHS substance do not exceed 0.1% by weight in homogeneous materials. Where designed to be soldered at high temperatures, "RoHS" products are suitable for use in specified lead-free processes. TI may reference these types of products as "Pb-Free".
RoHS Exempt: TI defines "RoHS Exempt" to mean products that contain lead but are compliant with EU RoHS pursuant to a specific EU RoHS exemption.
Green: TI defines "Green" to mean the content of Chlorine (Cl) and Bromine (Br) based flame retardants meet JS709B low halogen requirements of <=1000ppm threshold. Antimony trioxide based flame retardants must also meet the <=1000ppm threshold requirement.

(3) MSL, Peak Temp. - The Moisture Sensitivity Level rating according to the JEDEC industry standard classifications, and peak solder temperature.

(4) There may be additional marking, which relates to the logo, the lot trace code information, or the environmental category on the device.

(5) Multiple Device Markings will be inside parentheses. Only one Device Marking contained in parentheses and separated by a "~" will appear on a device. If a line is indented then it is a continuation of the previous line and the two combined represent the entire Device Marking for that device.

(6) Lead finish/Ball material - Orderable Devices may have multiple material finish options. Finish options are separated by a vertical ruled line. Lead finish/Ball material values may wrap to two lines if the finish value exceeds the maximum column width.

Important Information and Disclaimer: The information provided on this page represents TI's knowledge and belief as of the date that it is provided. TI bases its knowledge and belief on information provided by third parties, and makes no representation or warranty as to the accuracy of such information. Efforts are underway to better integrate information from third parties. TI has taken and continues to take reasonable steps to provide representative and accurate information but may not have conducted destructive testing or chemical analysis on incoming materials and chemicals. TI and TI suppliers consider certain information to be proprietary, and thus CAS numbers and other limited information may not be available for release.

In no event shall TI's liability arising out of such information exceed the total purchase price of the TI part(s) at issue in this document sold by TI to Customer on an annual basis.

TAPE AND REEL INFORMATION

REEL DIMENSIONS

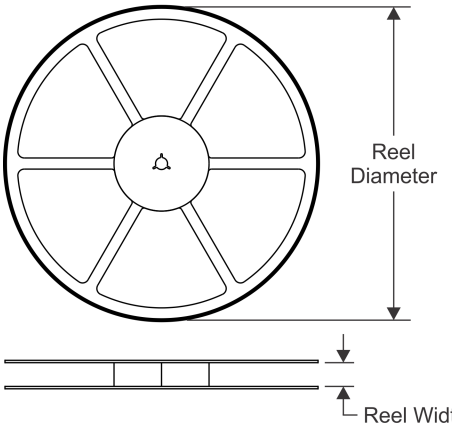

TAPE DIMENSIONS

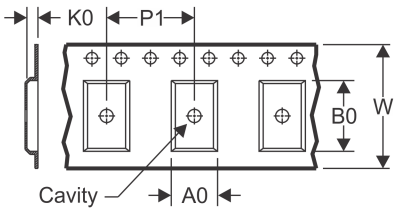

A0	Dimension designed to accommodate the component width
B0	Dimension designed to accommodate the component length
K0	Dimension designed to accommodate the component thickness
W	Overall width of the carrier tape
P1	Pitch between successive cavity centers

QUADRANT ASSIGNMENTS FOR PIN 1 ORIENTATION IN TAPE

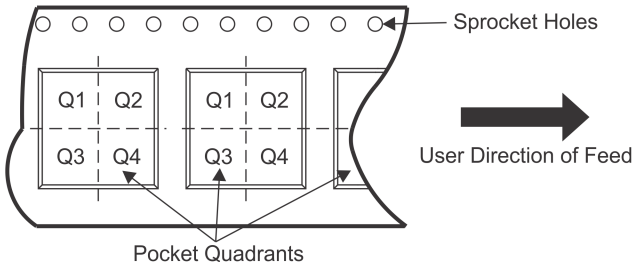

*All dimensions are nominal

Device	Package Type	Package Drawing	Pins	SPQ	Reel Diameter (mm)	Reel Width W1 (mm)	A0 (mm)	B0 (mm)	K0 (mm)	P1 (mm)	W (mm)	Pin1 Quadrant
XTR106U/2K5	SOIC	D	14	2500	330.0	16.4	6.5	9.0	2.1	8.0	16.0	Q1
XTR106UA/2K5	SOIC	D	14	2500	330.0	16.4	6.5	9.0	2.1	8.0	16.0	Q1

TAPE AND REEL BOX DIMENSIONS

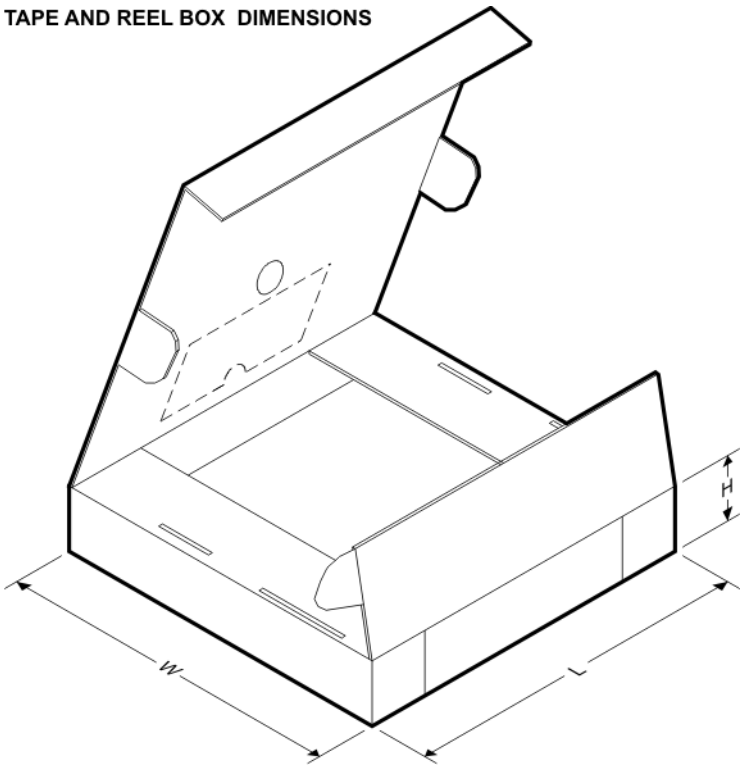

*All dimensions are nominal

Device	Package Type	Package Drawing	Pins	SPQ	Length (mm)	Width (mm)	Height (mm)
XTR106U/2K5	SOIC	D	14	2500	853.0	449.0	35.0
XTR106UA/2K5	SOIC	D	14	2500	853.0	449.0	35.0

TUBE

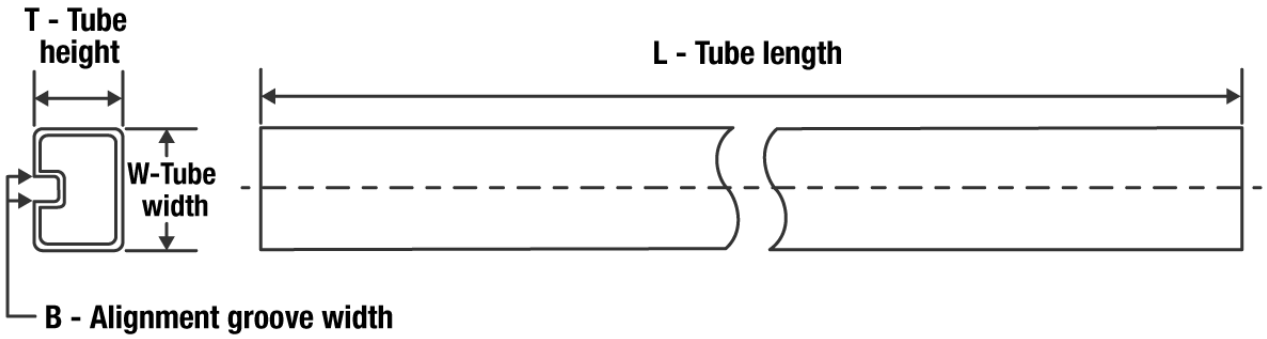

*All dimensions are nominal

Device	Package Name	Package Type	Pins	SPQ	L (mm)	W (mm)	T (µm)	B (mm)
XTR106P	N	PDIP	14	25	506	13.97	11230	4.32
XTR106PA	N	PDIP	14	25	506	13.97	11230	4.32
XTR106U	D	SOIC	14	50	506.6	8	3940	4.32
XTR106UA	D	SOIC	14	50	506.6	8	3940	4.32
XTR106UAG4	D	SOIC	14	50	506.6	8	3940	4.32

N (R–PDIP–T**)

PLASTIC DUAL–IN–LINE PACKAGE

16 PINS SHOWN

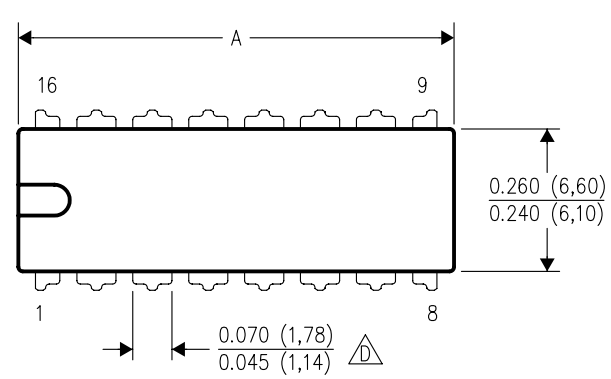

DIM \ PINS **	14	16	18	20
A MAX	0.775 (19,69)	0.775 (19,69)	0.920 (23,37)	1.060 (26,92)
A MIN	0.745 (18,92)	0.745 (18,92)	0.850 (21,59)	0.940 (23,88)
MS–001 VARIATION (C)	AA	BB	AC	AD

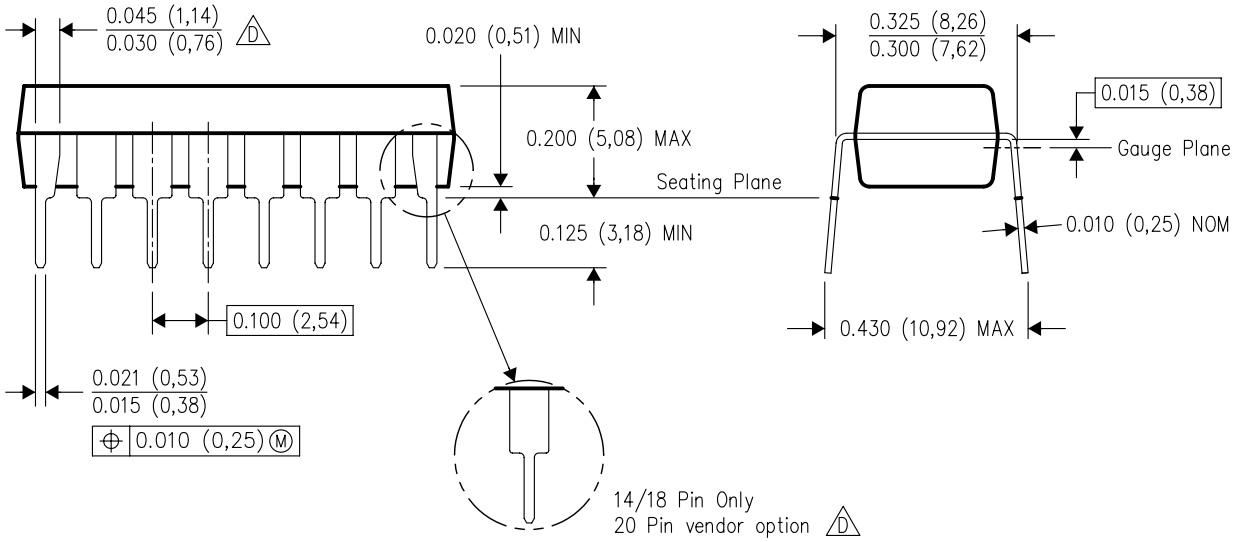

4040049/E 12/2002

NOTES:
A. All linear dimensions are in inches (millimeters).
B. This drawing is subject to change without notice.
C. Falls within JEDEC MS–001, except 18 and 20 pin minimum body length (Dim A).
D. The 20 pin end lead shoulder width is a vendor option, either half or full width.

D (R–PDSO–G14) PLASTIC SMALL OUTLINE

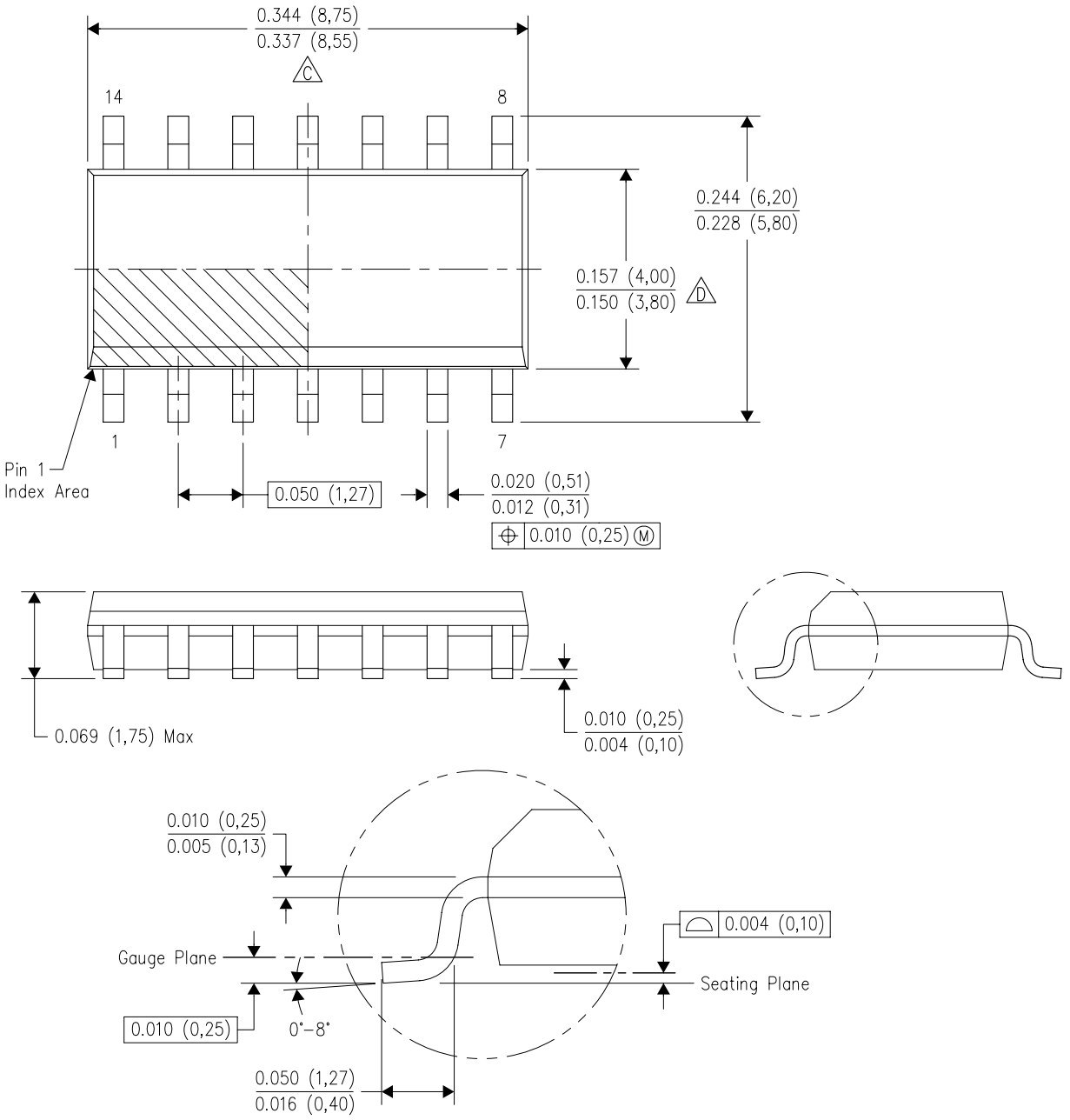

4040047–5/M 06/11

NOTES:
A. All linear dimensions are in inches (millimeters).
B. This drawing is subject to change without notice.
C. Body length does not include mold flash, protrusions, or gate burrs. Mold flash, protrusions, or gate burrs shall not exceed 0.006 (0,15) each side.
D. Body width does not include interlead flash. Interlead flash shall not exceed 0.017 (0,43) each side.
E. Reference JEDEC MS–012 variation AB.

D (R–PDSO–G14) PLASTIC SMALL OUTLINE

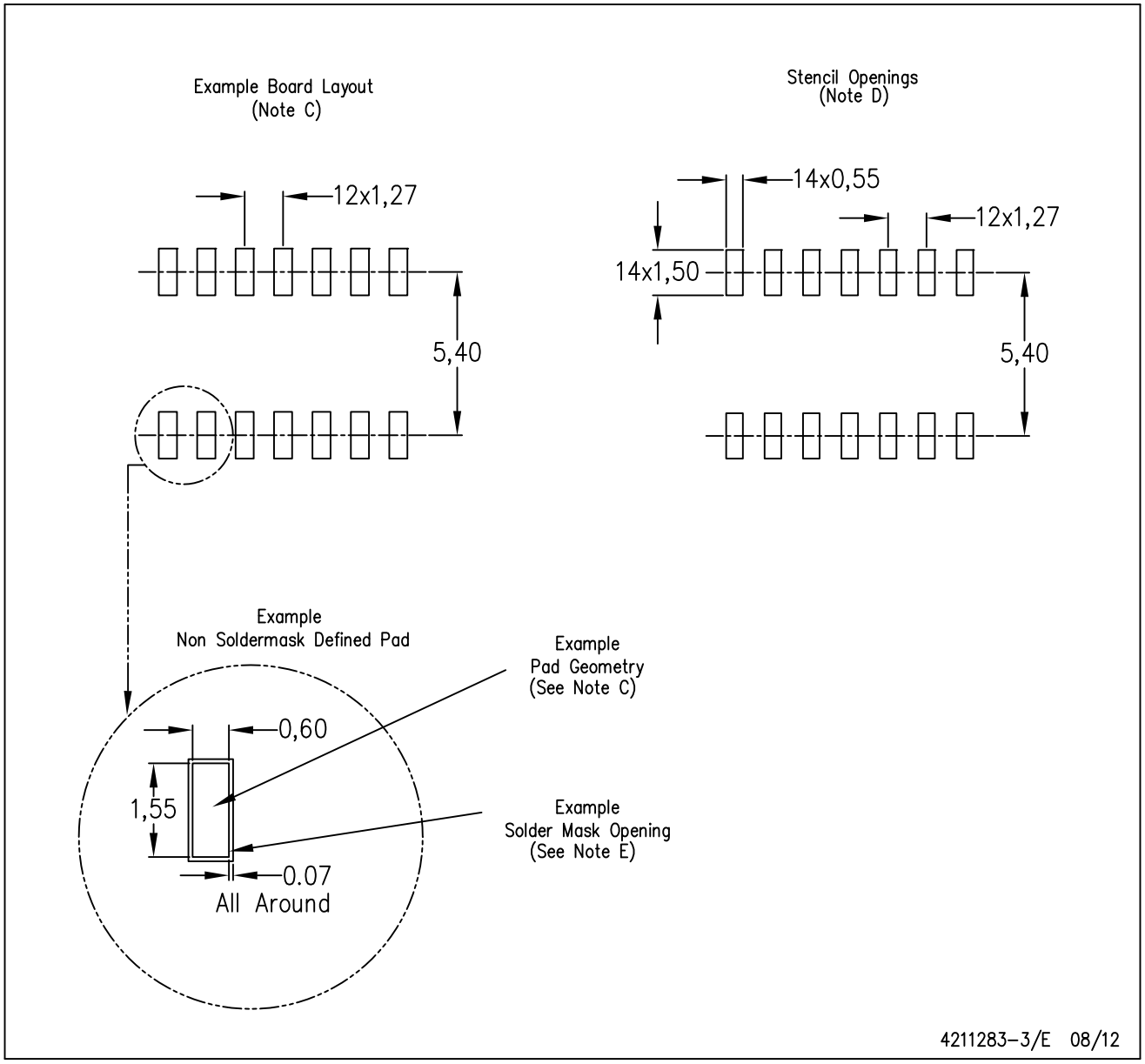

NOTES:
A. All linear dimensions are in millimeters.
B. This drawing is subject to change without notice.
C. Publication IPC–7351 is recommended for alternate designs.
D. Laser cutting apertures with trapezoidal walls and also rounding corners will offer better paste release. Customers should contact their board assembly site for stencil design recommendations. Refer to IPC–7525 for other stencil recommendations.
E. Customers should contact their board fabrication site for solder mask tolerances between and around signal pads.

IMPORTANT NOTICE AND DISCLAIMER

TI PROVIDES TECHNICAL AND RELIABILITY DATA (INCLUDING DATA SHEETS), DESIGN RESOURCES (INCLUDING REFERENCE DESIGNS), APPLICATION OR OTHER DESIGN ADVICE, WEB TOOLS, SAFETY INFORMATION, AND OTHER RESOURCES “AS IS” AND WITH ALL FAULTS, AND DISCLAIMS ALL WARRANTIES, EXPRESS AND IMPLIED, INCLUDING WITHOUT LIMITATION ANY IMPLIED WARRANTIES OF MERCHANTABILITY, FITNESS FOR A PARTICULAR PURPOSE OR NON-INFRINGEMENT OF THIRD PARTY INTELLECTUAL PROPERTY RIGHTS.

These resources are intended for skilled developers designing with TI products. You are solely responsible for (1) selecting the appropriate TI products for your application, (2) designing, validating and testing your application, and (3) ensuring your application meets applicable standards, and any other safety, security, regulatory or other requirements.

These resources are subject to change without notice. TI grants you permission to use these resources only for development of an application that uses the TI products described in the resource. Other reproduction and display of these resources is prohibited. No license is granted to any other TI intellectual property right or to any third party intellectual property right. TI disclaims responsibility for, and you will fully indemnify TI and its representatives against, any claims, damages, costs, losses, and liabilities arising out of your use of these resources.

TI’s products are provided subject to TI’s Terms of Sale or other applicable terms available either on ti.com or provided in conjunction with such TI products. TI’s provision of these resources does not expand or otherwise alter TI’s applicable warranties or warranty disclaimers for TI products.

TI objects to and rejects any additional or different terms you may have proposed.

Mailing Address: Texas Instruments, Post Office Box 655303, Dallas, Texas 75265
Copyright © 2022, Texas Instruments Incorporated